Walter AG

Derendinger Straße 53, 72072 Tübingen
Postfach 2049, 72010 Tübingen
Germany

walter-tools.com

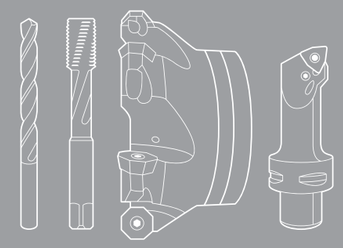

Europe

Walter Austria GmbH
Wien, Österreich
+43 1 5127300-0, service.at@walter-tools.com

Walter Benelux N.V./S.A.
Zaventem, Belgique
(B) +32 (02) 7258500
(NL) +31 (0) 900 26585-22
service.benelux@walter-tools.com

Walter (Schweiz) AG
Solothurn, Schweiz
+41 (0) 32 617 40 72, service.ch@walter-tools.com

Walter CZ s.r.o
Kurim, Czech Republic
+420 (0) 541 423352, service.cz@walter-tools.com

Walter Deutschland GmbH
Frankfurt, Deutschland
+49 (0) 69 78902-100, service.de@walter-tools.com

Walter France
Soultz-sous-Forêts, France
+33 (0) 3 88 80 20 00, service.fr@walter-tools.com

Walter Hungária Kft.
Budapest, Magyarország
+36 1 464 7160, service.hu@walter-tools.com

Walter Tools Ibérica S.A.U.
El Prat de Llobregat, España
+34 934 796760, service.iberica@walter-tools.com

Walter Italia s.r.l.
Via Volta, s.n.c., 22071 Cadorago - CO, Italia
+39 031 926-111, service.it@walter-tools.com

Walter Norden AB
Halmstad, Sweden
+46 (0) 35 16 53 00, service.norden@walter-tools.com

Walter Polska Sp. z o.o.
Warszawa, Polska
+48 (0) 22 8520495, service.pl@walter-tools.com

Walter Tools SRL
Timisoara, România
+40 (0) 256 406218, service.ro@walter-tools.com

ООО „Вальтер“
г. Санкт-Петербург
+7 (812) 334 54 56, service.ru@walter-tools.com

Walter Tools d.o.o.
Maribor, Slovenija
+386 (2) 629 01 30, service.si@walter-tools.com

Walter Slovakia, s.r.o.
Nitra, Slovakia
+421 (0) 37 3260 910, service.sk@walter-tools.com

Walter Kesici Takımlar Sanayi ve Ticaret Ltd. Şti.
Bursa, Türkiye
+90 (0) 224 909 5000 Pbx, service.tr@walter-tools.com

Walter GB Ltd.
Bromsgrove, England
+44 (1527) 839 450, service.uk@walter-tools.com

Asia

Walter Wuxi Co. Ltd.
Wuxi, Jiangsu, P.R. China
+86 (510) 853 72199, service.cn@walter-tools.com

Walter Wuxi Co. Ltd.
中国江苏省无锡市新区新畅南路 3 号
电话：+86-510-8537 2199 邮编：214028
客服热线：400 1510 510
邮箱：service.cn@walter-tools.com

Walter Tools India Pvt. Ltd.
Pune, India
+91 (20) 6773 7300, service.in@walter-tools.com

Walter Japan K.K.
Nagoya, Japan
+81 (52) 533 6135, service.jp@walter-tools.com

ワルタージャパン株式会社
名古屋市中村区名駅二丁目 45 番 7 号
+81 (0) 52 533 6135, service.jp@walter-tools.com

Walter Korea Ltd.
Anyang-si Gyeonggi-do, Korea
+82 (31) 337 6100, service.wkr@walter-tools.com

한국발터(주)
경기도 안양시 동안구 학의로 282
금강펜테리움 106호 14056
+82 (0) 31 337 6100, service.wkr@walter-tools.com

Walter Malaysia Sdn. Bhd.
Selangor D.E., Malaysia
+60(3)-5624 4265, service.my@walter-tools.com

Walter AG Singapore Pte. Ltd.
+65 6773 6180, service.sg@walter-tools.com

Walter (Thailand) Co., Ltd.
Bangkok, 10120, Thailand
+66 2 687 0388, service.th@walter-tools.com

America

Walter do Brasil Ltda.
Sorocaba – SP, Brasil
+55 15 32245700, service.br@walter-tools.com

Walter Canada
Mississauga, Canada
service.ca@walter-tools.com

Walter Tools S.A. de C.V.
El Marqués, Querétaro, México
+52 (442) 478-3500, service.mx@walter-tools.com

Walter USA, LLC
Greer, SC, USA
+1 800-945-5554, service.us@walter-tools.com

EURO 2024

Preisliste / Price List / Tarif / Listino prezzi / Lista de precios / Prijslijst

Änderungen infolge technischer Verbesserungen behalten wir uns vor. – Made in Germany (2024/01) EURO - Copyright Walter AG

incl. products of Walter, Walter Titex, Walter Prototyp

Preisliste / Price List / Tarif / Listino prezzi / Lista de precios / Prijslijst

EURO 2024

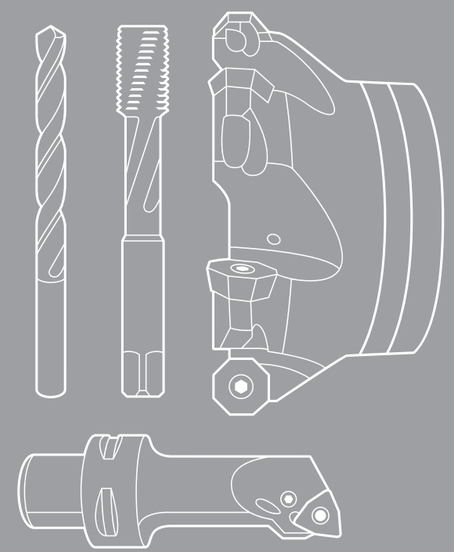

Walter Innotime®

From component to tooling solution at high speed.

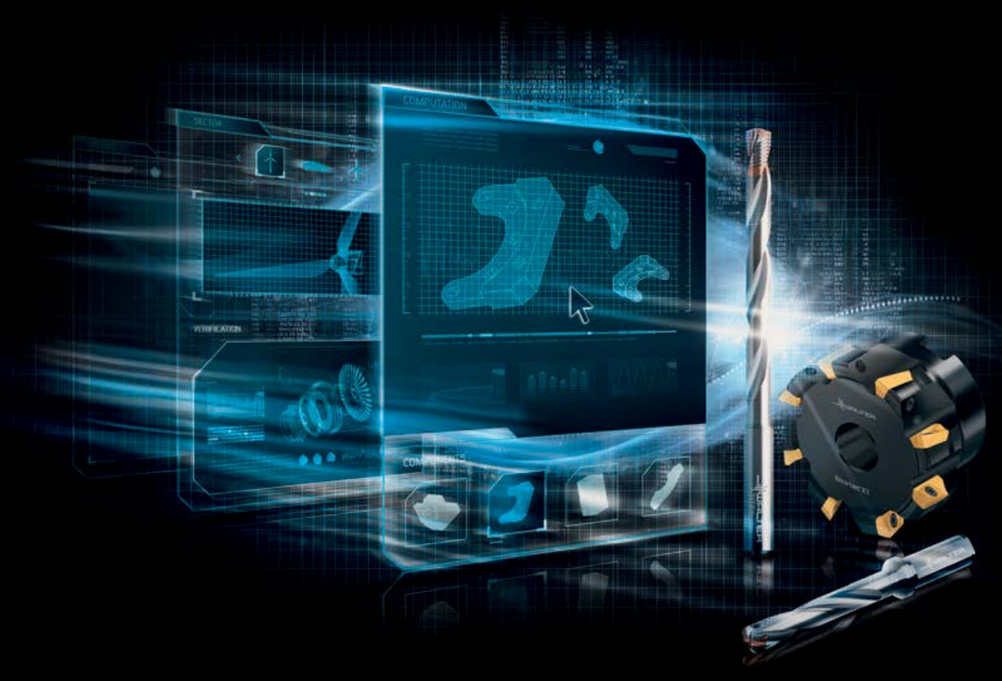

Get the best tool solution for your component in next to no time.
With Walter Innotime®, you can take your component design to the next level. This digital interface to Walter Engineering Kompetenz provides an overview of all required tools and machining parameters based on the 3D model of your component.

Cost-efficiency becomes simple and intuitive – with Walter Innotime®.

walter-tools.com

WALTER Engineering Kompetenz

Walter TOOLSHOP

Quick. Easy. Order.

It has never been easier to find, select and directly order the perfect tool solution.
Ordering 45,000 products round the clock is quick and easy with the Walter TOOLSHOP. This is ensured by the simple product search via filters or a search field, single sign-on and a variety of ordering options. It doesn't matter whether you are searching for an order number, using a Walter GPS recommendation or simply looking for the best tool solution. With Walter Innotime®, you can find this solution in no time at all – simply by uploading a 3D model of your component. That is how tool support is done today.
Simple, secure, reliable and fast.

walter-tools.com

WALTER Engineering Kompetenz

Inhalt / Content / Sommaire / Contenuto / Contenido / Inhoud

Seitenaufbau / Layout / Structure du tarif / Legenda / Estructura de la tarifa / Legende **4**

Walter, Walter Titex, Walter Prototyp

Rabattgruppen / Discount groups / Groupes de remise / Gruppo sconto / Grupo de descuentos / Kortingsgroepen **6**

Preis- und Lagerinformationen / Price and stock information / Informations sur les tarifs et les disponibilités / Informazioni su prezzi e magazzino / Informaciones de precio y de almacenaje / Prijs- en voorraadinformatie **14**

Walter Multiply

Nachschleif- und Wiederbeschichtungsservice / Reconditioning-Service / Service de reconditionnement / Servizio di riaffilatura / El servicio de reacondicionamiento / Reconditioning-Service **306**

Walter Toolstation – Preisinformationen / Price information / Informations sur les tarifs / Informazioni su prezzi / Informaciones de precio / Prijsinformatie **320**

Walter

Training - Angebot und Preis / Training - Offer and Price / Formation - Offre et prix / Corsi di formazione - Offerta e Prezzo / Formación - Oferta y precio / Opleidingen - Offerte en prijs **324**

Trademarks und Produktnamen / Trademarks and Produktnames / Marques déposées et noms de produits / Marcahi registrati / Marcas y nomenclatura de producto / Handelsmerken en productnamen **328**

Allgemeine Verkaufsbedingungen / General sales conditions / Conditions Générales de Vente / Condizioni generali di vendita / Condiciones generales de venta / Algemene verkoopvoorwaarden **336**

Seitenaufbau
Layout
Structure du tarif
Legenda
Estructura de la tarifa
Legende

Bezeichnung/ Designation	Sorte/Grade	VE/ US		Disc. Gr.	Article No.	EURO Stück/ piece
❶	❷	❸	❹	❺	❻	❼
DC180-03-04.366A1-WJ30EZ	WJ30EZ	1	●	D30	8324807	**102,00**
DC180-03-04.400A1-WJ30EZ	WJ30EZ	1	●	D30	8324808	**102,00**
DC180-03-04.500A1-WJ30EZ	WJ30EZ	1	●	D30	8324809	**102,00**
DC180-03-04.600A1-WJ30EZ	WJ30EZ	1	●	D30	8324810	**102,00**
DC180-03-04.650A1-WJ30EZ	WJ30EZ	1	●	D30	8324811	**102,00**

❶ Bezeichnung
Designation
Désignation
Denominazione
Denominación
Omschrijving

❷ Sorte
Grade
Nuance
Grado
Grado
Graad

❸ Verkaufseinheit
Unit sales
Unité de vente
Unità di vendita
Unidad de venta
Eenheden

❹ **Lagerhaltigkeit**
- ● Standardwerkzeuge – ab Lager lieferbar
- ◒ Standardwerkzeuge – innerhalb von 10 Werktagen verfügbar.
- ■ Nicht mehr serienmäßig produzierte Standardwerkzeuge. Ab Lager lieferbar, solange der Vorrat reicht. Dann Preis und Lieferzeit auf Anfrage.
- ○ Nicht lagerhaltig. Lieferzeit auf Anfrage.

Stock availability
- ● Standard Tools – available on stock.
- ◒ Standard Tools – available in 10 working days.
- ■ Standard Tools on Phase-out – available on stock till stock is empty. Price and delivery time on request.
- ○ Tools not available from stock. Delivery subjects to quotation.

Disponibilité
- ● Outils standard en stock.
- ◒ Outils standard disponibles sous un délai de 10 jours ouvrés.
- ■ Outils standard fin de série. Disponibles jusqu'à épuisement du stock Prix et délais sur demande.
- ○ Produit non stocké. Délai sur demande

Disponibilità di magazzino
- ● Utensili standard – disponibili a magazzino.
- ◒ Utensili standard – disponibili in 10 giorni lavorativi.
- ■ Utensili non più in produzione – disponibili a magazzino sino a esaurimento scorte. Prezzo e tempi di consegna su richiesta.
- ○ Materiale non a magazzino, consegna su richiesta.

Disponibilidad en almacén
- ● Herramientas estándar – disponibles almacén.
- ◒ Herramientas estándar – disponibles en 10 días laborables.
- ■ Fabricación en serie cancelada disponible en almacén. Una vez agotado el almacén. Precio y plazo de entrega según petición.
- ○ No disponible en estoc. Plazo de entrega a ofertar.

Beschikbare voorraad
- ● Standaardgereedschap – uit voorraad leverbaar.
- ◒ Standaardgereedschap – binnen 10 werkdagen beschikbaar.
- ■ Niet meer geproduceerd standaardgereedschap. Uit voorraad leverbaar, zolang de voorraad strekt. Prijs en leveringtermijn op verzoek.
- ○ Standaard – niet uit voorraad leverbaar – fabricatie op aanvraag. Prijzen per stuk. Voor grotere hoeveelheden prijzen op aanvraag.

❺ Rabattgruppe
Discount group
Groupes de remise
Gruppo sconto
Grupo de descuento
Kortingsgroepen

❻ Artikel Nr.
Article No.
N° d'article
Cod. Articolo
Artículo n°
Artikel Nr.

❼ Preis/Stück
Prices/piece
Prix/unité
Prezzo/Pezzo
Precio/unidad
Prijs/stuk

_Walter, Walter Titex, Walter Prototyp

Rabattgruppen / Discount groups / Groupes de remise / Gruppo sconto / Grupo de descuentos / Kortingsgroepen

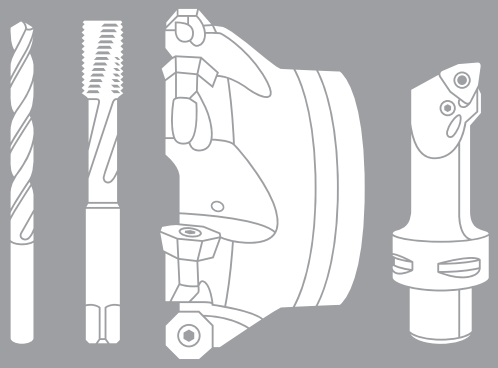

Rabattgruppe

004 Walter Wendeschneidplatten zum Fräsen (Walter BLAXX und Xtra·tec®)
005 Walter Wendeschneidplatten zum Fräsen (CBN)
006 Walter Wendeschneidplatten zum Fräsen (PKD)
007 Walter Wendeschneidplatten zum Fräsen (Keramik)
009 Walter Wendeschneidplatten zum Fräsen
010 Walter Wendeschneidplatten zum Fräsen (Schwerzerspanung)
011 Walter Wendeschneidplatten für Reibwerkzeuge
013 Walter Wendeschneidplatten zum Bohren (CBN)
014 Walter Wendeschneidplatten zum Bohren (PKD)
016 Walter Wendeschneidplatten zum Vollbohren (LCMX)
017 Walter Wendeschneidplatten zum Vollbohren (Trigon)
018 Walter Austauschbare Bohrspitzen für Xtra·tec® Vollbohrwerkzeuge
019 Walter Wendeschneidplatten zum Voll-, Auf- und Feinbohren
020 Walter Cut Wendeschneidplatten zum Stechen
021 Walter Cut Wendeschneidplatten zum Stechen (MX System)
022 Walter NTS Wendeschneidplatten zum Gewinden
023 Walter Wendeschneidplatten zum Drehen (CBN)
024 Walter Wendeschneidplatten zum Drehen (Keramik)
025 Walter Wendeschneidplatten zum Drehen (PKD)
027 Walter Wendeschneidplatten zum Drehen (negative Grundform)
028 Walter Wendeschneidplatten zum Drehen (NE-Metalle und Kunststoffe)
029 Walter Wendeschneidplatten zum Drehen (positive Grundform)
030 Walter Mikro Werkzeuge aus Vollhartmetall
040 Walter Fräswerkzeuge mit Kassetteneinsatz
042 Walter Fräswerkzeuge mit gelöteten HM-Schneiden
044 Walter Fräswerkzeuge mit gelöteten PKD-Schneiden
048 Walter Fräswerkzeuge mit festem Plattensitz
049 Walter BLAXX und Xtra·tec® Fräswerkeuge
050 Walter Wendeschneidplatten-Bohrer
052 Walter Auf- und Feinbohrwerkzeuge
054 Walter Wechselplatten-Bohrer
060 Walter Halter zum Drehen, Stechen und Gewinden
065 Walter Capto™ Werkzeuge
070 Walter Aufnahmen und Spanneinheiten
073 Walter Accure·Tec Aufnahmen
075 Walter Spannzangen
076 Walter Einteilige Aufnahmen
077 Walter Spannfutter
095 Walter Einbauteile und Zubehör
D10 Walter Titex Vollhartmetallbohrer, 3-5 x Dc, Perform Linie
D11 Walter Titex Vollhartmetallbohrer, 8-12 x Dc, Perform Linie
D20 Walter Titex Vollhartmetallbohrer, 3-5 x Dc, Advance Linie
D21 Walter Titex Vollhartmetallbohrer, 8-12 x Dc, Advance Linie
D22 Walter Titex Vollhartmetallbohrer, > 16 x Dc, Advance Linie
D30 Walter Titex Vollhartmetallbohrer, 3-5 x Dc, Supreme Linie
D31 Walter Titex Vollhartmetallbohrer, 8-12 x Dc, Supreme Linie
D32 Walter Titex Vollhartmetallbohrer, ≥ 16 x Dc, Supreme Linie
DH4 Walter Titex HSS/HSS-E-Spiralbohrer Typ N
DH8 Walter Titex HSS-E-Spiralbohrer Typ UFL®
DHB Walter Titex Spiralbohrer Typ VA Inox
DHC Walter Titex HSS-Aufbohrer und -Senker
DHK Walter Titex HSS-Zentrier-, Stufen- und Stiftlochbohrer
DHM Walter Titex HSS-E-Mikrobohrer
DS2 Walter Titex Vollhartmetallbohrer Typ N
DS6 Walter Titex Vollhartmetallbohrer, Typ BSX, Alpha®44, Alpha®Jet
DS8 Walter Titex Vollhartmetallbohrer, 8-12 x Dc, Pilotbohrer
DS9 Walter Titex Vollhartmetallbohrer, ≥ 16 x Dc
DSA Walter Titex Vollhartmetallbohrer, 3-5 x Dc, High Performance
M10 Walter Prototyp Vollhartmetallfräser, Perform Linie
M20 Walter Prototyp Vollhartmetallfräser, Advance Linie
M30 Walter Prototyp Vollhartmetallfräser, Supreme Linie
MA1 Walter Prototyp Aufnahmen für ConeFit-Fräser
MS2 Walter Prototyp Vollhartmetallfräser
MS4 Walter Prototyp Vollhartmetall-Hochleistungsfräser
MS5 Walter Prototyp Vollhartmetall ConeFit-Fräser
MS7 Walter Prototyp HPC-U Vollhartmetallfräser
RH1 Walter Titex HSS/-E-Reibahlen
RS1 Walter Titex Vollhartmetall-Reibahlen
RS2 Walter Titex Vollhartmetall HSC-Reibahlen
T15 Walter Prototyp HSS-E Gewindebohrer, Perform Linie
T27 Walter Prototyp HSS-E Gewindeformer, Advance Linie
T35 Walter Prototyp HSS-E Gewindebohrer, Supreme Linie
T37 Walter Prototyp HSS-E Gewindeformer, Supreme Linie
TH1 Walter Prototyp HSS-E Hand- und Maschinengewindebohrer
TH4 Walter Prototyp HSS-E Hochleistungsgewindebohrer
TH5 Walter Prototyp HSS-E Maschinengewindebohrer mit Innenkühlung
TH7 Walter Prototyp HSS-E Gewindeformer
THD Walter Prototyp Schneideisen
THP Walter Prototyp HSS-E Gewindebohrer X·pert
THS Walter Prototyp HSS-E Hand- und Maschinengewindebohrer (Titex Selection)
THV Walter Prototyp HSS-E Gewindeformer (Titex Selection)
TIB Walter Halter für Gewindeschneidplatten
TII Walter Gewindeschneidplatten
TS1 Walter Prototyp Vollhartmetall Gewindeformer
TS2 Walter Prototyp Vollhartmetall-Maschinengewindebohrer
TSM Walter Prototyp Vollhartmetall Gewindefräser
ZS2 Walter Titex Werkzeugsätze

Discount groups

004 Walter Indexable Inserts for Milling (Walter BLAXX and Xtra·tec®)
005 Walter Indexable Inserts for Milling (CBN)
006 Walter Indexable Inserts for Milling (PCD)
007 Walter Indexable Inserts for Milling (Ceramic)
009 Walter Indexable Inserts for Milling
010 Walter Indexable Inserts for Milling (Heavy Duty Machining)
011 Walter Indexable Inserts for Reaming Tools
013 Walter Indexable Inserts for Boring (CBN)
014 Walter Indexable Inserts for Boring (PCD)
016 Walter Indexable Inserts for Drilling (LCMX)
017 Walter Indexable Inserts for Drilling (Trigon)
018 Walter Exchangeable Tips for Xtra·tec® Drills
019 Walter Indexable Inserts for Drilling, Boring and Precision Boring
020 Walter Cut Grooving Inserts
021 Walter Cut Grooving Inserts (MX System)
022 Walter NTS Threading Inserts
023 Walter Indexable Inserts for Turning (CBN)
024 Walter Indexable Inserts for Turning (Ceramic)
025 Walter Indexable Inserts for Turning (PCD)
027 Walter Indexable Inserts for Turning (Negative Basic Shape)
028 Walter Indexable Inserts for Turning (Nonferrous Metals and Plastics)
029 Walter Indexable Inserts for Turning (Positive Basic Shape)
030 Walter Micro Tools, Solid Carbide
040 Walter Cutters with Cartridges
042 Walter Brazed Milling Cutters
044 Walter Brazed Milling Cutters (PCD)
048 Walter Milling Cutters with Fixed Pockets
049 Walter BLAXX and Xtra·tec® Milling Cutters
050 Walter Inserts Drill
052 Walter Tools for Boring and Precision Boring
054 Walter Exchangeable Tips Drill
060 Walter Toolholders for Turning, Grooving and Threading
065 Walter Capto™ Tools
070 Walter Adaptors and Clamping Units
073 Walter Accure·Tec Adaptors
075 Walter Collets
076 Walter Integral Adaptors
077 Walter Collet Chucks
095 Walter Assembly Parts and Accessories
D10 Walter Titex solid carbide Drills, 3-5 x Dc, Perform Line
D11 Walter Titex solid carbide Drills, 8-12 x Dc, Perform Line
D20 Walter Titex solid carbide Drills, 3-5 x Dc, Advance Line
D21 Walter Titex solid carbide Drills, 8-12 x Dc, Advance Line
D22 Walter Titex solid carbide Drills, > 16 x Dc, Advance Line
D30 Walter Titex solid carbide Drills, 3-5 x Dc, Supreme Line
D31 Walter Titex solid carbide Drills, 8-12 x Dc, Supreme Line
D32 Walter Titex solid carbide Drills, ≥ 16 x Dc, Supreme Line
DH4 Walter Titex Jobber Drills, HSS/HSS-E, Type N
DH8 Walter Titex Deep Hole Drills, HSS-E, Type UFL®
DHB Walter Titex Drills, Typ VA Inox
DHC Walter Titex Core Drills and Countersinks, HSS
DHK Walter Titex Centre, Subland and Taper Pin Drills, HSS
DHM Walter Titex Micro Drills, HSS-E
DS2 Walter Titex Drills, solid carbide, Type N
DS6 Walter Titex Drills, solid carbide, Type BSX, Alpha®44, Alpha®Jet
DS8 Walter Titex Drills, solid carbide, 8-12 x Dc, Pilot Drills
DS9 Walter Titex Drills, solid carbide, ≥ 16 x Dc
DSA Walter Titex Drills, solid carbide, 3-5 x Dc, High Performance
M10 Walter Prototyp solid carbide Milling Cutters, Perform Line
M20 Walter Prototyp solid carbide Milling Cutters, Advance Line
M30 Walter Prototyp solid carbide Milling Cutters, Supreme Line
MA1 Walter Prototyp ConeFit Adaptors
MS2 Walter Prototyp Milling Cutters, solid carbide
MS4 Walter Prototyp Advanced Milling Cutters, solid carbide
MS5 Walter Prototyp ConeFit Milling Cutters, solid carbide
MS7 Walter Prototyp HPC-U Milling Cutters, solid carbide
RH1 Walter Titex Reamers, HSS/-E
RS1 Walter Titex Reamers, solid carbide
RS2 Walter Titex HSC Reamers, solid carbide
T15 Walter Prototyp Taps, HSS-E, Perform Line
T27 Walter Prototyp Thread Formers, HSS-E, Advance Line
T35 Walter Prototyp Taps, HSS-E, Supreme Line
T37 Walter Prototyp Thread Formers, HSS-E, Supreme Line
TH1 Walter Prototyp Hand- and Machine Taps, HSS/-E
TH4 Walter Prototyp Advanced Machine Taps, HSS-E
TH5 Walter Prototyp Machine Taps, HSS-E, Internal Cooling
TH7 Walter Prototyp Thread Formers, HSS-E
THD Walter Prototyp Dies
THP Walter Prototyp Taps, HSS-E, X·pert
THS Walter Prototyp Hand- and Machine Taps, HSS/-E (Titex Selection)
THV Walter Prototyp Thread Formers, HSS-E (Titex Selection)
TIB Walter Indexable Threading Bodies
TII Walter Indexable Threading Inserts
TS1 Walter Prototyp Thread Formers, solid carbide
TS2 Walter Prototyp Taps, solid carbide
TSM Walter Prototyp Thread Milling Cutters, solid carbide
ZS2 Walter Titex tool sets

Groupes de remise

004 Walter Plaquettes de fraisage (Walter BLAXX et Xtra·tec®)
005 Walter Plaquettes de fraisage (CBN)
006 Walter Plaquettes de fraisage (PCD)
007 Walter Plaquettes de fraisage (céramique)
009 Walter Plaquettes de fraisage
010 Walter Plaquettes de fraisage (usinage lourd)
011 Walter Plaquettes amovibles pour des outils d'alésage
013 Walter Plaquettes de perçage (CBN)
014 Walter Plaquettes de perçage (PCD)
016 Walter Plaquettes de perçage (LCMX)
017 Walter Plaquettes de perçage (trigone)
018 Walter Plaquettes de perçage (Xtra·tec®)
019 Walter Plaquettes amovibles de perçage et d'alésage (ébauche, finition)
020 Walter Cut Plaquettes amovibles de tronçonnage
021 Walter Cut Plaquettes amovibles de tronçonnage (MX Système)
022 Walter NTS Plaquettes amovibles de filetage
023 Walter Plaquettes de tournage (CBN)
024 Walter Plaquettes de tournage (céramiques)
025 Walter Plaquettes de tournage (PCD)
027 Walter Plaquettes de tournage amovibles (forme de base négative)
028 Walter Plaquettes de tournage (non ferreux et matières plastiques)
029 Walter Plaquettes de tournage amovibles (forme de base positive)
030 Walter Micro-outils en carbure monobloc
040 Walter Outils de fraisage à cartouches
042 Walter Outils de fraisage à lames brasées
044 Walter Outils de fraisage avec mise rapportée PCD
048 Walter Outils de fraisage à plaquettes amovibles
049 Walter Outils de fraisage Walter BLAXX et Xtra·tec®
050 Walter Outils de perçage (Plaquettes amovibles)
052 Walter Outils de perçage (ébauche, finition)
054 Walter Outils de perçage (Embouts de perçage)
060 Walter Porte-outils pour le tournage, le tronçonnage et le taraudage.
065 Walter Outils Walter Capto™
070 Walter Attachements modulaires et unités de serrage
073 Walter Accure·Tec Attachements
075 Walter Pinces de fixation
076 Walter Attachements monobloc
077 Walter Mandrins
095 Walter Accessoires et pièces détachées
D10 Walter Titex Forets en carbure monobloc, 3-5 x Dc, Perform Ligne
D11 Walter Titex Forets en carbure monobloc, 8-12 x Dc, Perform Ligne
D20 Walter Titex Forets en carbure monobloc, 3-5 x Dc, Advance Ligne
D21 Walter Titex Forets en carbure monobloc, 8-12 x Dc, Advance Ligne
D22 Walter Titex Forets en carbure monobloc, > 16 x Dc, Advance Ligne
D30 Walter Titex Forets en carbure monobloc, 3-5 x Dc, Supreme Ligne
D31 Walter Titex Forets en carbure monobloc, 8-12 x Dc, Supreme Ligne
D32 Walter Titex Forets en carbure monobloc, ≥ 16 x Dc, Supreme Ligne
DH4 Walter Titex Forets HSS/HSS-E Type N
DH8 Walter Titex Forets HSS-E pour perçages profonds, type UFL®
DHB Walter Titex Forets type VA Inox
DHC Walter Titex Forets-aléseurs et fraises coniques en HSS
DHK Walter Titex Forets HSS à centrer, étagés et forets pour trous de goupilles
DHM Walter Titex Micro-forets HSS-E
DS2 Walter Titex Forets en carbure monobloc,Type N
DS6 Walter Titex Forets en carbure monobloc, Type BSX, Alpha®Jet, Alpha®44
DS8 Walter Titex Forets en carbure monobloc, 8-12 x Dc
DS9 Walter Titex Forets en carbure monobloc, ≥16 x Dc
DSA Walter Titex Forets en carbure monobloc, 3-5 x Dc, Hautes performances
M10 Walter Prototyp Fraises en carbure, Perform Ligne
M20 Walter Prototyp Fraises en carbure, Advance Ligne
M30 Walter Prototyp Fraises en carbure, Supreme Ligne
MA1 Walter Prototyp ConeFit adapteurs
MS2 Walter Prototyp Fraises en carbure monobloc
MS4 Walter Prototyp Fraises hautes performances en carbure monobloc
MS5 Walter Prototyp ConeFit fraises en carbure monobloc
MS7 Walter Prototyp HPC-U fraises en carbure monobloc
RH1 Walter Titex Alésoirs en HSS/-E
RS1 Walter Titex Alésoirs en carbure monobloc en carbure
RS2 Walter Titex HSC Alésoirs en carbure monobloc
T15 Walter Prototyp Tarauds, HSS-E, Perform Ligne
T27 Walter Prototyp Tarauds travaillant par déformation, HSS-E, Advance Ligne
T35 Walter Prototyp Tarauds, HSS-E, Supreme Ligne
T37 Walter Prototyp Tarauds travaillant par déformation, HSS-E, Supreme Ligne
TH1 Walter Prototyp, Tarauds HSS/-E, à main et machine
TH4 Walter Prototyp, Tarauds HSS-E hautes performances
TH5 Walter Prototyp Tarauds machine, HSS-E, avec lubrification interne
TH7 Walter Prototyp Tarauds travaillant par déformation, HSS-E
THD Walter Prototyp Filières
THP Walter Prototyp Tarauds machine standard, HSS-E, X·pert
THS Walter Prototyp, Tarauds HSS/-E à main et machine (Titex Selection)
THV Walter Prototyp Tarauds à refouler Selection, HSS-E
TIB Walter Corps pour plaquettes de filetage
TII Walter Plaquettes de filetage
TS1 Walter Prototyp Tarauds travaillant par déformation en carbure monobloc
TS2 Walter Prototyp Tarauds machine en carbure monobloc
TSM Walter Prototyp Fraises à fileter en carbure monobloc
ZS2 Walter Titex Jeux d'outils

Gruppo sconto

004 Walter Inserti di fresatura (Walter BLAXX e Xtra·tec®)
005 Walter Inserti di fresatura (CBN)
006 Walter Inserti di fresatura (PCD)
007 Walter Inserti di fresatura (ceramica)
009 Walter Inserti di fresatura
010 Walter Inserti di fresatura (forti asportazioni)
011 Walter Inserti di alesatura
013 Walter Inserti di foratura (CBN)
014 Walter Inserti di foratura (PCD)
016 Walter Inserti di foratura (LCMX)
017 Walter Inserti di foratura (trigonali)
018 Walter Inserti di foratura (Xtra·tec®)
019 Walter Inserti di foratura e barenatura
020 Walter Cut Inserti per canalini e troncatura
021 Walter Cut Inserti per canalini e troncatura (MX Sistema)
022 Walter NTS Inserti per filettatura
023 Walter Inserti di tornitura (CBN)
024 Walter Inserti di tornitura (ceramica)
025 Walter Inserti di tornitura (PCD)
027 Walter Inserti di tornitura (forma negativa)
028 Walter Inserti di tornitura (metalli non ferrosi e materie plastiche)
029 Walter Inserti di tornitura (forma positiva)
030 Micro Utensili, metallo duro integrale
040 Walter Frese ad inserti con cartucce
042 Walter Frese saldobrasate
044 Walter Frese saldobrasate con riporti PCD
048 Walter Frese con sede inserto fissa
049 Walter Frese Walter BLAXX e Xtra·tec®
050 Walter Utensili di foratura (punte ad inserti)
052 Walter Utensili per barenatura e per barenatura di precisione
054 Walter Utensili di foratura (punte a cuspide)
060 Walter Steli di tornitura, scanalatura e maschiatura
065 Walter Utensili Walter Capto™
070 Walter adattatori e unità di fissaggio
073 Walter Accure·Tec Adattatori
075 Walter Pinze elastiche
076 Walter Adattatori integrali
077 Walter Adattatori porta pinze e porta maschi
095 Walter Ricambi ed accessori
D10 Walter Titex Punte metallo duro, 3-5 x Dc, Linea Perform
D11 Walter Titex Punte metallo duro, 8-12 x Dc, Linea Perform
D20 Walter Titex Punte metallo duro, 3-5 x Dc, Linea Advance
D21 Walter Titex Punte metallo duro, 8-12 x Dc, Linea Advance
D22 Walter Titex Punte metallo duro, > 16 x Dc, Linea Advance
D30 Walter Titex Punte metallo duro, 3-5 x Dc, Linea Supreme
D31 Walter Titex Punte metallo duro, 8-12 x Dc, Linea Supreme
D32 Walter Titex Punte metallo duro, ≥ 16 x Dc, Linea Supreme
DH4 Walter Titex Punte HSS/HSS-E, Tipo N
DH8 Walter Titex Punte per forature profonde HSS-E tipo UFL®
DHB Walter Titex Punte, tipo VA Inox
DHC Walter Titex Allargatore e svasatore in HSS
DHK Walter Titex Punte da centro in HSS
DHM Walter Titex Micro punte in HSS-E
DS2 Walter Titex Punte in metallo duro Tipo N
DS6 Walter Titex Punte in metallo duro, Tipo BSX, Alpha®44, Alpha®Jet
DS8 Walter Titex Punte, metallo duro, 8-12 x Dc
DS9 Walter Titex Punte, metallo duro, ≥16 x Dc
DSA Walter Titex Punte, mid, 3-5 x Dc, High Performance
M10 Walter Prototyp Frese metallo duro, Linea Perform
M20 Walter Prototyp Frese metallo duro, Linea Advance
M30 Walter Prototyp Frese metallo duro, Linea Supreme (Universale)
MA1 Walter Prototyp ConeFit adattatori
MS2 Walter Prototyp Frese standard, metallo duro
MS4 Walter Prototyp Frese ad alto rendimento, metallo duro
MS5 Walter Prototyp ConeFit Frese, metallo duro
MS7 Walter Prototyp HPC-U Frese, metallo duro
RH1 Walter Titex Alesatori in HSS/-E
RS1 Walter Titex Alesatori in metallo duro
RS2 Walter Titex HSC Alesatori in metallo duro
T15 Walter Prototyp Maschi HSS-E, Linea Perform
T27 Walter Prototyp Rullatori, HSS-E, Linea Advance
T35 Walter Prototyp Maschi HSS-E, Linea Supreme
T37 Walter Prototyp Rullatori, HSS-E, Linea Supreme
TH1 Walter Prototyp maschi a mano e a macchina HSS/-Co
TH4 Walter Prototyp maschi a macchina ad alte prestazioni, HSS-E
TH5 Walter Prototyp Maschi, HSS-E, con lubrificazione interna
TH7 Walter Prototyp Rullatori, HSS-E
THD Walter Prototyp Filiere
THP Walter Prototyp Maschi a macchina, HSS-E, X·pert
THS Walter Prototyp Maschi, HSS/-Co (Selezione Titex)
THV Walter Prototyp Rullatori, HSS-E (Selezione Titex)
TIB Walter Corpo per inserti di filettatura
TII Walter Inserti per filettatura
TS1 Walter Prototyp Maschi rullatori, metallo duro
TS2 Walter Prototyp Maschi a macchina, metallo duro
TSM Walter Prototyp Frese a filettare in metallo duro
ZS2 Walter Titex SET di utensili

Grupo de descuentos

004 Walter Plaquitas para fresado (WalterBLAXX y Xtra·tec®)
005 Walter Plaquitas para fresado (CBN)
006 Walter Plaquitas para fresado (PCD)
007 Walter Plaquitas para fresado (cerámica)
009 Walter Plaquitas para fresado
010 Walter Plaquitas para fresado de mecanizados pesados
011 Walter Plaquitas para escariado
013 Walter Plaquitas para taladrado (CBN)
014 Walter Plaquitas para taladrado (PCD)
016 Walter Plaquitas para taladrado (LCMX)
017 Walter Plaquitas para taladrado (trigonales)
018 Walter Plaquitas para taladrado (Xtra·tec®)
019 Walter Plaquitas para taladrado y mandrinado
020 Walter Cut Plaquitas para ranurado y tronzado
021 Walter Cut Plaquitas para ranurado y tronzado (MX Sistema)
022 Walter NTS Plaquitas para roscado
023 Walter Plaquitas para torneado (CBN)
024 Walter Plaquitas para torneado (cerámica)
025 Walter Plaquitas para torneado (PCD)
027 Walter Plaquitas para torneado (forma básica negativa)
028 Walter Plaquitas para torneado (metales no férricos y plásticos)
029 Walter Plaquitas para torneado (forma básica positiva)
030 Walter Micro herramientas, metal duro
040 Walter Herramientas de fresado con cartuchos
042 Walter Helifresas soldadas
044 Walter Fresas soldadas con PCD
048 Walter Herramientas de fresado
049 Walter Herramientas de fresado WalterBLAXX y Xtra·tec®
050 Walter Brocas de plaquitas intercambiables
052 Walter Herramientas de mandrinado
054 Walter Brocas con punta intercambiable
060 Walter Soportes para torneado, ranurado y roscado
065 Walter Herramientas WalterCapto™
070 Walter Adaptadores y unidades de fijación
073 Walter Accure·Tec Adaptadores
075 Walter Pinzas
076 Walter Adaptadores integrales
077 Walter Adaptadores
095 Walter Accesorios y repuestos
D10 Walter TitexBrocas, metal duro, 3-5 x Dc, Línea Perform
D11 Walter Titex Brocas, metal duro, 8-12 x Dc, Línea Perform
D20 Walter Titex Brocas, metal duro, 3-5 x Dc, Línea Advance
D21 Walter Titex Brocas, metal duro, 8-12 x Dc, Línea Advance
D22 Walter Titex Brocas, metal duro, > 16 x Dc, Línea Advance
D30 Walter Titex Brocas, metal duro, 3-5 x Dc, Línea Supreme
D31 Walter Titex Brocas, metal duro, 8-12 x Dc, Línea Supreme
D32 Walter Titex Brocas, metal duro, ≥ 16 x Dc, Línea Supreme
DH4 Walter Titex Brocas HSS/-E, tipo N
DH8 Walter Titex Brocas para agujeros profundos, HSS-E, tipo UFL®
DHB Walter Titex Brocas, tipo VA Inox
DHC Walter Titex Brocas escariadoras y avellanadores, HSS
DHK Walter Titex Brocas de puntear, bidiametrales y cónicas, HSS
DHM Walter Titex Micro brocas, HSS-E
DS2 Walter Titex Brocas, metal duro, tipo N
DS6 Walter Titex Brocas, metal duro, tipo BSX, Alpha®44, Alpha®Jet
DS8 Walter Titex Brocas, metal duro, 8-12 x Dc
DS9 Walter Titex Brocas, metal duro, ≥16 x Dc
DSA Walter Titex Brocas, metal duro, 3-5 x Dc, Alto Rendimiento
M10 Walter Prototyp Fresas metal duro, línea Perform
M20 Walter Prototyp Fresas metal duro, línea Advance
M30 Walter Prototyp Fresas metal duro, línea Supreme
MA1 Walter Prototyp ConeFit adaptadores
MS2 Walter Prototyp Fresas, metal duro
MS4 Walter Prototyp Fresas avanzadas, metal duro
MS5 Walter Prototyp ConeFit fresas, metal duro
MS7 Walter Prototyp HPC-U fresas, metal duro
RH1 Walter Titex Escariadores, HSS/-E
RS1 Walter Titex Escariadores, metal duro
RS2 Walter Titex HSC Escariadores, metal duro
T15 Walter Prototyp Machos HSS-E, línea Perform
T27 Walter Prototyp Laminadores, HSS-E, línea Advance
T35 Walter Prototyp Machos HSS-E, línea Supreme
T37 Walter Prototyp Laminadores, HSS-E, línea Supreme
TH1 Walter Prototyp Machos de mano y de máquina, HSS/-E
TH4 Walter Prototyp Machos avanzados, HSS/-E
TH5 Walter Prototyp Machos de máquina, HSS-E, con refrigeración interior
TH7 Walter Prototyp Laminadores, HSS-E
THD Walter Prototyp Terrajas
THP Walter Prototyp Machos de máquina, HSS-E, X·pert
THS Walter Prototyp Machos de mano y máquina, HSS/-E
THV Walter Prototyp Selección laminadores, HSS-E
TIB Walter Cuerpos intercambiables para roscar
TII Walter Plaquitas intercambiables para roscar
TS1 Walter Prototyp Laminadores de máquina, metal duro
TS2 Walter Prototyp Machos de máquina, metal duro
TSM Walter Prototyp Fresas de metal duro para roscar
ZS2 Walter Titex Juegos de herramientas

Kortingsgroepen

004 Walter Freeswisselplaten (Walter BLAXX en Xtra·tec®)
005 Walter Freeswisselplaten (CBN)
006 Walter Freeswisselplaten (PKD)
007 Walter Freeswisselplaten (Keramiek)
009 Walter Freeswisselplaten
010 Walter Freeswisselplaten (zware verspaning)
011 Walter Wisselplaten voor ruimers
013 Walter Boorwisselplaten (CBN)
014 Walter Boorwisselplaten (PKD)
016 Walter Boorwisselplaten (LCMX)
017 Walter Boorwisselplaten voor volboren (Trigon)
018 Walter Boorwisselplaten voor volboren (Xtra·tec®)
019 Walter Boor- en opboorwisselplaten (ruwen, finisseren)
020 Walter Cut Afsteekwisselplaten
021 Walter Cut Afsteekwisselplaten (MX Systeem)
022 Walter NTS Draadsnijwisselplaten
023 Walter Wisselplaten voor het draaien (CBN)
024 Walter Wisselplaten voor draaien (Keramiek)
025 Walter Wisselplaten voor het draaien (PKD)
027 Walter Wisselplaten voor het draaien (negatieve)
028 Walter Draaiwisselplaten (non-ferro en kunststof)
029 Walter Wisselplaten voor het draaien (positieve grondvorm)
030 Walter Volhardmetaal Micro Gereedschappen
040 Walter Frezen met Cassetten
042 Walter gebrazeerde Frezen
044 Walter Frezen met gesoldeerde PKD-inlegplaten
048 Walter Frezen met wisselplaten met vaste zitting
049 Walter Frezen met Walter BLAXX en Xtra·tec® wisselplaten
050 Walter Boorgereedschappen (Wisselplaten)
052 Walter Opboren (ruwen, finisseren)
054 Walter Boorgereedschappen (Boorpunten)
060 Walter Klemhouders voor draaien, steken en draadsnijden
065 Walter Capto™ Gereedschap
070 Walter Opnamen en Klemhouders
073 Walter Accure·Tec Opname
075 Walter Spantangen
076 Walter Ééndelige Opnames
077 Walter Spantanghouder
095 Walter Toebehoren en Onderdelen
D10 Walter Titex Boren, volhardmetaal, 3-5 x Dc, Perform Lijn
D11 Walter Titex Boren, volhardmetaal, 8-12 x Dc, Perform Lijn
D20 Walter Titex Boren, volhardmetaal, 3-5 x Dc, Advance Lijn
D21 Walter Titex Boren, volhardmetaal, 8-12 x Dc, Advance Lijn
D22 Walter Titex Boren, volhardmetaal, > 16 x Dc, Advance Lijn
D30 Walter Titex Boren, volhardmetaal, 3-5 x Dc, Supreme Lijn
D31 Walter Titex Boren, volhardmetaal, 8-12 x Dc, Supreme Lijn
D32 Walter Titex Boren, volhardmetaal, ≥ 16 x Dc, Supreme Lijn
DH4 Walter Titex Boren HSS/-E, niet gecoat
DH8 Walter Titex Diepgat Boren HSS-E, type UFL®
DHB Walter Titex Boren, type VA Inox
DHC Walter Titex Opruim - en verzinkboren HSS
DHK Walter Titex Centreerboren HSS
DHM Walter Titex Micro Boren HSS-E
DS2 Walter Titex Boren, volhardmetaal, type N
DS6 Walter Titex Boren, volhardmetaal, type BSX, Alpha®44, Alpha®Jet
DS8 Walter Titex Boren, volhardmetaal, 8-12 x Dc, Pilot Boren
DS9 Walter Titex Boren, volhardmetaal, ≥ 16 x Dc
DSA Walter Titex Boren, volhardmetaal, 3-5 x Dc, High Performance
M10 Walter Prototyp Boren, volhardmetaal, Perform Lijn
M20 Walter Prototyp Boren, volhardmetaal, Advance Lijn
M30 Walter Prototyp Boren, volhardmetaal, Supreme Lijn
MA1 Walter Prototyp ConeFit Freesopnames
MS2 Walter Prototyp Frezen, volhardmetaal, gecoat
MS4 Walter Prototyp High Performance Frezen, volhardmetaal, gecoat
MS5 Walter Prototyp ConeFit Frezen, volhardmetaal
MS7 Walter Prototyp HPC-U Frezen, volhardmetaal
RH1 Walter Titex Ruimers, HSS/-E
RS1 Walter Titex Ruimers, volhardmetaal
RS2 Walter Titex HSC Ruimers, volhardmetaal
T15 Walter Prototyp Tappen, HSS-E, Perform Lijn
T27 Walter Prototyp Roltappen HSS-E, Advance Lijn
T35 Walter Prototyp Tappen, HSS-E, Supreme Lijn
T37 Walter Prototyp Roltappen HSS-E, Supreme Lijn
TH1 Walter Prototyp Hand- en Machinetappen HSS/-E
TH4 Walter Prototyp High Performance Machinetappen HSS-E
TH5 Walter Prototyp Machinetappen, HSS-E met IK
TH7 Walter Prototyp Roltappen HSS-E, gecoat
THD Walter Prototyp Snijplaten
THP Walter Prototyp Standaard Machinetappen HSS-E, X·pert
THS Walter Prototyp Selectie Hand- en Machinetappen HSS/-E
THV Walter Prototyp Selectie Roltappen HSS-E
TIB Walter Draadsnijwisselplaten Houders
TII Walter Draadsnijwisselplaten
TS1 Walter Prototyp Roltappen, volhardmetaal
TS2 Walter Prototyp Machinetappen, volhardmetaal
TSM Walter Prototyp Schroefdraadfrezen, volhardmetaal
ZS2 Walter Titex gereedschappen-sets

_Walter, Walter Titex, Walter Prototyp

Preis- und Lagerinformationen / Price and stock information / Informations sur les tarifs et les disponibilités / Informazioni su prezzi e magazzino / Informaciones de precio y de almacenaje / Prijs- en voorraadinformatie

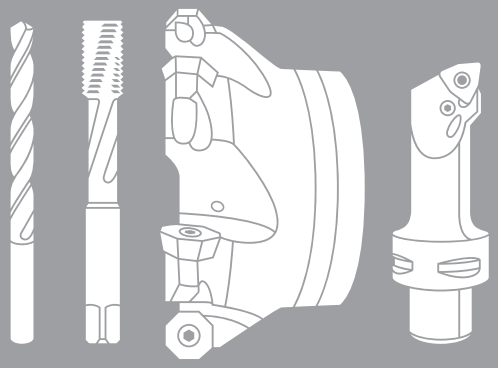

Bezeichnung / Designation	Sorte / Grade	VE / US		Disc. Gr.	Article No.	EURO Stück / piece
A05K-SCLPL2		1	●	060	7394705	126,00
A05K-SCLPR2		1	●	060	7394706	126,00
A06F-STFCL06		1	●	060	5673654	126,00
A06F-STFCL06-R		1	●	060	5673655	126,00
A06F-STFCR06		1	●	060	5673633	126,00
A06F-STFCR06-R		1	●	060	5673634	126,00
A06M-SCLPL2		1	○	060	7394708*	126,00
A06M-SCLPR2		1	●	060	7394707	126,00
A08H-SCLCL06		1	●	060	5673573	126,00
A08H-SCLCL06-R		1	●	060	5673575	126,00
A08H-SCLCR06		1	●	060	5673574	126,00
A08H-SCLCR06-R		1	●	060	5673576	126,00
A08H-STFCL06		1	●	060	5673657	126,00
A08H-STFCL06-R		1	●	060	5673658	126,00
A08H-STFCR06		1	●	060	5673635	126,00
A08H-STFCR06-R		1	●	060	5673636	126,00
A08M-SCLPL2		1	●	060	7394709	126,00
A08M-SCLPR2		1	●	060	7394710	126,00
A100M.1.50.020.32		1	●	070	5006957	376,00
A100M.1.50.020.40		1	●	070	5006958	415,00
A100M.1.50.020.50		1	●	070	5006959	415,00
A100M.1.50.020.63		1	●	070	5006960	437,00
A100M.1.50.025.80		1	●	070	5006961	437,00
A100M.2.40.020.25		1	●	070	5006962	319,00
A100M.2.40.020.32		1	●	070	5006963	319,00
A100M.2.40.030.40		1	●	070	5006964	345,00
A100M.2.40.030.50		1	●	070	5006965	345,00
A100M.2.40.050.63		1	●	070	5006966	376,00
A100M.2.40.090.80		1	●	070	5007006	574,00
A100M.2.50.020.25		1	●	070	5006967	376,00
A100M.2.50.020.32		1	●	070	5006968	376,00
A100M.2.50.020.40		1	●	070	5006969	415,00
A100M.2.50.020.50		1	●	070	5006970	415,00
A100M.2.50.020.63		1	●	070	5006971	437,00
A100M.2.50.025.80		1	●	070	5006972	437,00
A100M.3.50.035.63		1	●	070	5006982	393,00
A100M.3.50.050.80		1	●	070	5006983	393,00
A100M.4.40.030.25		1	●	070	5006984	319,00
A100M.4.40.030.32		1	●	070	5006985	319,00
A100M.4.40.030.40		1	●	070	5006986	345,00
A100M.4.40.030.50		1	●	070	5006987	345,00
A100M.4.40.040.63		1	●	070	5006988	376,00
A100M.4.40.090.80		1	●	070	5007009	663,00
A100M.4.50.040.25		1	●	070	5006989	376,00
A100M.4.50.040.32		1	●	070	5006990	376,00
A100M.4.50.040.40		1	●	070	5006991	415,00
A100M.4.50.040.50		1	●	070	5006992	415,00
A100M.4.50.040.63		1	●	070	5006993	437,00
A100M.4.50.040.80		1	●	070	5006994	437,00
A100M.7.063.055.25.HSK		1	●	070	5024332	488,00
A100M.7.063.055.32.HSK		1	●	070	5024333	488,00
A100M.7.063.065.40.HSK		1	●	070	5024334	511,00
A100M.7.063.065.50.HSK		1	●	070	5024335	511,00
A100M.7.063.075.63.HSK		1	●	070	5024336	511,00
A100M.7.063.080.25.HSK		1	●	070	5007010	488,00
A100M.7.063.080.32.HSK		1	●	070	5007011	488,00
A100M.7.063.080.40.HSK		1	●	070	5007012	511,00
A100M.7.063.080.50.HSK		1	●	070	5007013	511,00
A100M.7.063.080.80.HSK		1	●	070	5333787	511,00
A100M.7.063.100.63.HSK		1	●	070	5007014	542,00
A100M.7.100.060.25.HSK		1	●	070	5024340	547,00
A100M.7.100.060.32.HSK		1	●	070	5024341	547,00
A100M.7.100.080.25.HSK		1	●	070	5007015	547,00
A100M.7.100.080.32.HSK		1	●	070	5007016	547,00
A100M.7.100.080.40.HSK		1	●	070	5007017	585,00
A100M.7.100.080.50.HSK		1	●	070	5007018	585,00
A100M.7.100.080.63.HSK		1	●	070	5024342	610,00
A100M.7.100.100.63.HSK		1	●	070	5007019	610,00
A100M.7.100.100.80.HSK		1	●	070	5007020	610,00
A100M.8.63.045.25.C6		1	●	070	5007030	453,00

Bezeichnung / Designation	Sorte / Grade	VE / US		Disc. Gr.	Article No.	EURO Stück / piece
A100M.8.63.045.32.C6		1	●	070	5007031	453,00
A100M.8.63.060.40.C6		1	●	070	5007032	453,00
A100M.8.63.070.63.C6		1	●	070	5007034	453,00
A100M.8.63.070.80.C6		1	●	070	5906552	453,00
A100M.8.80.065.63.C8		1	●	070	5007039	500,00
A100M.8.80.070.80.C8		1	●	070	5007040	500,00
A101M.0.25.050.25		1	●	070	5007341	252,00
A101M.0.25.060.25		1	●	070	5007419	259,00
A101M.0.32.050.32		1	●	070	5007342	259,00
A101M.0.32.060.32		1	●	070	5007420	262,00
A101M.0.32.075.32		1	●	070	5007343	262,00
A101M.0.40.070.40		1	●	070	5007344	268,00
A101M.0.40.080.40		1	●	070	5007421	293,00
A101M.0.50.070.50		1	●	070	5007345	293,00
A101M.0.50.080.50		1	●	070	5007422	342,00
A101M.0.50.100.50		1	●	070	5007346	342,00
A101M.0.63.080.63		1	●	070	5007347	361,00
A101M.0.63.100.63		1	●	070	5007423	379,00
A101M.0.63.120.63		1	●	070	5007424	398,00
A101M.0.63.140.63		1	●	070	5007425	416,00
A101M.0.63.160.63		1	●	070	5007348	432,00
A101M.0.80.100.80		1	●	070	5007349	415,00
A101M.0.80.120.80		1	●	070	5007426	432,00
A101M.0.80.140.80		1	●	070	5007427	447,00
A101M.0.80.160.80		1	●	070	5007350	471,00
A102M.0.32.050.25		1	●	070	5007483	276,00
A102M.0.40.050.25		1	●	070	5007484	283,00
A102M.0.40.050.32		1	●	070	5007485	283,00
A102M.0.50.050.25		1	●	070	5007416	303,00
A102M.0.50.050.32		1	●	070	5007417	303,00
A102M.0.50.070.40		1	●	070	5007418	303,00
A102M.0.63.050.25		1	●	070	5007351	308,00
A102M.0.63.050.32		1	●	070	5007352	308,00
A102M.0.63.060.25		1	●	070	5007428	314,00
A102M.0.63.060.32		1	●	070	5007430	314,00
A102M.0.63.070.40		1	●	070	5007353	308,00
A102M.0.63.070.50		1	●	070	5007354	308,00
A102M.0.63.080.25		1	●	070	5007429	324,00
A102M.0.63.080.32		1	●	070	5007431	324,00
A102M.0.63.080.40		1	●	070	5007432	314,00
A102M.0.63.080.50		1	●	070	5007436	317,00
A102M.0.63.100.40		1	●	070	5007433	342,00
A102M.0.63.100.50		1	●	070	5007437	344,00
A102M.0.63.120.40		1	●	070	5007434	365,00
A102M.0.63.120.50		1	●	070	5007438	370,00
A102M.0.63.140.40		1	●	070	5007435	378,00
A102M.0.63.140.50		1	●	070	5007439	381,00
A102M.0.80.080.40		1	●	070	5007355	399,00
A102M.0.80.080.50		1	●	070	5007356	399,00
A102M.0.80.080.63		1	●	070	5007357	424,00
A103M.0.63.090.80		1	●	070	5007358	776,00
A10K-SCLCL06		1	●	060	5673577	126,00
A10K-SCLCL06-R		1	●	060	5673600	126,00
A10K-SCLCR06		1	●	060	5673579	126,00
A10K-SCLCR06-R		1	●	060	5673601	126,00
A10K-SDUCL07		1	●	060	5673602	126,00
A10K-SDUCL07-R		1	●	060	5673604	126,00
A10K-SDUCR07		1	●	060	5673603	126,00
A10K-SDUCR07-R		1	●	060	5673605	126,00
A10K-STFCL09		1	●	060	5673659	126,00
A10K-STFCL09-R		1	●	060	5673670	126,00
A10K-STFCR09		1	●	060	5673637	126,00
A10K-STFCR09-R		1	●	060	5673639	126,00
A10K-SWLCL04		1	●	060	5673671	126,00
A10K-SWLCL04-R		1	■	060	5204692*	126,00
A10K-SWLCR04		1	●	060	5673650	126,00
A10K-SWLCR04-R		1	■	060	5204693*	126,00
A10R-SCLPL2		1	●	060	7394711	126,00
A10R-SCLPR2		1	●	060	7394712	126,00
A1114-4		1	●	DH4	5056867	15,26

Bezeichnung / Designation	Sorte / Grade	VE / US		Disc. Gr.	Article No.	EURO Stück / piece
A1114-5		1	●	DH4	5056868	16,61
A1114-6		1	●	DH4	5056869	17,88
A1114-8		1	●	DH4	5056870	29,90
A1114-10		1	●	DH4	5056863	34,40
A1114-12		1	●	DH4	5056864	48,60
A1114-16		1	●	DH4	5056865	64,30
A1114-20		1	●	DH4	5056866	104,00
A1114L-4		1	●	DH4	5153658	28,30
A1114L-5		1	●	DH4	5153659	30,80
A1114L-6		1	●	DH4	5153660	33,10
A1114L-1/4IN		1	●	DH4	5153652	34,30
A1114L-8		1	●	DH4	5153661	55,40
A1114L-3/8IN		1	●	DH4	5153657	58,20
A1114L-10		1	●	DH4	5153653	62,00
A1114L-12		1	●	DH4	5153654	85,10
A1114L-1/2IN		1	●	DH4	5153651	89,50
A1114S-2		1	●	DH4	5153670	18,35
A1114S-3		1	●	DH4	5153673	16,14
A1114S-4		1	●	DH4	5153676	16,32
A1114S-5		1	●	DH4	5153677	17,69
A1114S-6		1	●	DH4	5153690	19,13
A1114S-1/4IN		1	●	DH4	5153663	19,26
A1114S-8		1	●	DH4	5153689	31,90
A1114S-3/8IN		1	●	DH4	5153675	32,40
A1114S-10		1	●	DH4	5153665	36,70
A1114S-12		1	●	DH4	5153666	51,90
A1114S-1/2IN		1	●	DH4	5153662	51,90
A1114S-14		1	●	DH4	5153667	71,30
A1114S-5/8IN		1	●	DH4	5153678	71,60
A1114S-3/4IN		1	●	DH4	5153674	102,00
A1114S-1IN		1	●	DH4	5153664	179,00
A1115-4		1	●	DH4	5056875	15,26
A1115-5		1	●	DH4	5056876	16,61
A1115-6		1	●	DH4	5056877	17,88
A1115-8		1	●	DH4	5056878	29,90
A1115-10		1	●	DH4	5056871	34,40
A1115-12		1	●	DH4	5056872	48,60
A1115-16		1	●	DH4	5056873	64,30
A1115-20		1	●	DH4	5056874	104,00
A1115L-4		1	●	DH4	5153682	28,30
A1115L-5		1	●	DH4	5153691	30,80
A1115L-6		1	●	DH4	5153702	33,10
A1115L-1/4IN		1	●	DH4	5153687	34,30
A1115L-8		1	●	DH4	5153701	55,40
A1115L-3/8IN		1	●	DH4	5153681	58,20
A1115L-10		1	●	DH4	5153685	62,00
A1115L-12		1	●	DH4	5153684	85,10
A1115L-1/2IN		1	●	DH4	5153688	89,50
A1115L-5/8IN		1	●	DH4	5153703	99,70
A1115L-3/4IN		1	●	DH4	5153680	141,00
A1115L-20		1	●	DH4	5153679	161,00
A1115L-1IN		1	●	DH4	5153686	225,00
A1115S-2		1	●	DH4	5153699	18,35
A1115S-3		1	●	DH4	5153706	16,14
A1115S-4		1	●	DH4	5153709	16,32
A1115S-5		1	●	DH4	5153710	17,69
A1115S-6		1	●	DH4	5153712	19,13
A1115S-1/4IN		1	●	DH4	5153692	19,26
A1115S-8		1	●	DH4	5153713	31,90
A1115S-3/8IN		1	●	DH4	5153708	32,40
A1115S-10		1	●	DH4	5153694	36,70
A1115S-12		1	●	DH4	5153695	51,90
A1115S-1/2IN		1	●	DH4	5153700	51,90
A1115S-14		1	●	DH4	5153696	71,30
A1115S-5/8IN		1	●	DH4	5153711	71,60
A1115S-16		1	●	DH4	5153697	71,60
A1115S-18		1	●	DH4	5153698	93,90
A1115S-3/4IN		1	●	DH4	5153707	102,00
A1115S-20		1	●	DH4	5153704	111,00
A1115S-1IN		1	●	DH4	5153693	179,00

Bezeichnung / Designation	Sorte / Grade	VE / US		Disc. Gr.	Article No.	EURO Stück / piece
A1148-1		10	●	DH8	5057110	4,74
A1148-N060		10	●	DH8	5057106	4,74
A1148-N059		10	●	DH8	5057104	4,74
A1148-N058		10	●	DH8	5057103	4,74
A1148-N057		10	●	DH8	5057102	4,74
A1148-1.1		10	●	DH8	5057111	4,74
A1148-N056		10	●	DH8	5057101	4,74
A1148-3/64IN		10	●	DH8	5057187	4,74
A1148-1.2		10	●	DH8	5057112	4,74
A1148-1.3		10	●	DH8	5057113	4,71
A1148-N055		10	●	DH8	5057100	4,68
A1148-N054		10	●	DH8	5057099	4,68
A1148-1.4		10	●	DH8	5057114	4,68
A1148-1.5		10	●	DH8	5057115	4,28
A1148-N053		10	●	DH8	5057098	4,68
A1148-1/16IN		10	●	DH8	5057120	4,68
A1148-1.6		10	●	DH8	5057116	4,45
A1148-N052		10	●	DH8	5057097	4,45
A1148-1.7		10	●	DH8	5057117	4,45
A1148-N051		10	●	DH8	5057096	4,45
A1148-N050		10	●	DH8	5057095	4,45
A1148-1.8		10	●	DH8	5057118	4,40
A1148-N049		10	●	DH8	5057093	4,74
A1148-1.9		10	●	DH8	5057119	4,40
A1148-N048		10	●	DH8	5057092	4,40
A1148-5/64IN		10	●	DH8	5057212	4,36
A1148-N047		10	●	DH8	5057091	4,40
A1148-2		10	●	DH8	5057159	3,88
A1148-N046		10	●	DH8	5057090	4,11
A1148-N045		10	●	DH8	5057089	4,11
A1148-2.1		10	●	DH8	5057160	4,01
A1148-N044		10	●	DH8	5057088	4,01
A1148-2.2		10	●	DH8	5057161	4,15
A1148-N043		10	●	DH8	5057087	4,15
A1148-2.3		10	●	DH8	5057162	4,40
A1148-N042		10	●	DH8	5057086	4,71
A1148-3/32IN		10	●	DH8	5057186	4,71
A1148-2.4		10	●	DH8	5057163	4,71
A1148-N041		10	●	DH8	5057085	4,71
A1148-N040		10	●	DH8	5057084	4,28
A1148-2.5		10	●	DH8	5057164	4,28
A1148-N039		10	●	DH8	5057082	4,68
A1148-N038		10	●	DH8	5057081	4,68
A1148-2.6		10	●	DH8	5057165	4,74
A1148-N037		10	●	DH8	5057080	4,74
A1148-2.7		10	●	DH8	5057166	4,74
A1148-N036		10	●	DH8	5057079	4,90
A1148-7/64IN		10	●	DH8	5057235	4,90
A1148-N035		10	●	DH8	5057078	4,90
A1148-2.8		10	●	DH8	5057167	4,90
A1148-N034		10	●	DH8	5057077	4,90
A1148-N033		10	●	DH8	5057076	4,90
A1148-2.9		10	●	DH8	5057168	5,00
A1148-N032		10	●	DH8	5057075	4,97
A1148-3		10	●	DH8	5057175	4,68
A1148-N031		5	●	DH8	5057074	5,04
A1148-3.1		5	●	DH8	5057176	5,04
A1148-1/8IN		5	●	DH8	5057123	5,04
A1148-3.2		5	●	DH8	5057177	4,87
A1148-N030		5	●	DH8	5057073	5,18
A1148-3.3		5	●	DH8	5057178	4,97
A1148-3.4		5	●	DH8	5057179	5,13
A1148-N029		5	●	DH8	5057071	5,28
A1148-3.5		5	●	DH8	5057180	5,18
A1148-N028		5	●	DH8	5057070	5,28
A1148-9/64IN		5	●	DH8	5057257	5,28
A1148-3.6		5	●	DH8	5057181	5,39
A1148-N027		5	●	DH8	5057069	5,39
A1148-3.7		5	●	DH8	5057182	5,39
A1148-N026		5	●	DH8	5057068	5,39

Bezeichnung / Designation	Sorte / Grade	VE / US		Disc. Gr.	Article No.	EURO Stück / piece
A1148-NO25		5	●	DH8	5057067	5,47
A1148-3.8		5	●	DH8	5057183	5,47
A1148-NO24		5	●	DH8	5057066	5,47
A1148-3.9		5	●	DH8	5057184	5,50
A1148-NO23		5	●	DH8	5057065	5,50
A1148-5/32IN		5	●	DH8	5057211	5,50
A1148-NO22		5	●	DH8	5057064	5,50
A1148-4		5	●	DH8	5057190	5,71
A1148-NO21		5	●	DH8	5057063	5,97
A1148-NO20		5	●	DH8	5057062	5,97
A1148-4.1		5	●	DH8	5057191	6,18
A1148-4.2		5	●	DH8	5057192	5,97
A1148-NO19		5	●	DH8	5057060	5,97
A1148-4.3		5	●	DH8	5057193	6,36
A1148-NO18		5	●	DH8	5057059	6,36
A1148-11/64IN		5	●	DH8	5057133	6,36
A1148-NO17		5	●	DH8	5057058	6,36
A1148-4.4		5	●	DH8	5057194	6,60
A1148-NO16		5	●	DH8	5057057	6,71
A1148-4.5		5	●	DH8	5057195	6,40
A1148-NO15		5	●	DH8	5057056	6,71
A1148-4.6		5	●	DH8	5057196	6,71
A1148-NO14		5	●	DH8	5057055	7,01
A1148-NO13		5	●	DH8	5057054	6,82
A1148-4.7		5	●	DH8	5057197	6,82
A1148-3/16IN		5	●	DH8	5057185	6,88
A1148-4.8		5	●	DH8	5057198	7,01
A1148-NO12		5	●	DH8	5057053	7,01
A1148-NO11		5	●	DH8	5057052	7,01
A1148-4.9		5	●	DH8	5057199	7,36
A1148-NO10		5	●	DH8	5057051	7,36
A1148-NO9		5	●	DH8	5057109	7,36
A1148-5		5	●	DH8	5057200	7,11
A1148-NO8		5	●	DH8	5057108	7,49
A1148-5.1		5	●	DH8	5057201	7,49
A1148-NO7		5	●	DH8	5057107	7,66
A1148-13/64IN		5	●	DH8	5057141	7,91
A1148-NO6		5	●	DH8	5057105	7,91
A1148-5.2		5	●	DH8	5057202	8,14
A1148-NO5		5	●	DH8	5057094	8,64
A1148-5.3		5	●	DH8	5057203	8,64
A1148-NO4		5	●	DH8	5057083	8,64
A1148-5.4		5	●	DH8	5057204	9,11
A1148-NO3		5	●	DH8	5057072	9,17
A1148-5.5		5	●	DH8	5057205	8,87
A1148-7/32IN		5	●	DH8	5057234	9,11
A1148-5.6		5	●	DH8	5057206	9,17
A1148-NO2		5	●	DH8	5057061	9,17
A1148-5.7		5	●	DH8	5057207	9,32
A1148-NO1		5	●	DH8	5057050	9,32
A1148-5.8		5	●	DH8	5057208	9,42
A1148-5.9		5	●	DH8	5057209	9,56
A1148-LET.A		5	●	DH8	5153714	9,32
A1148-15/64IN		5	●	DH8	5057148	9,76
A1148-6		5	●	DH8	5057213	9,32
A1148-LET.B		5	●	DH8	5153715	9,98
A1148-6.1		5	●	DH8	5057214	9,98
A1148-LET.C		5	●	DH8	5153716	10,24
A1148-6.2		5	●	DH8	5057215	10,24
A1148-LET.D		5	●	DH8	5153717	10,40
A1148-6.3		5	●	DH8	5057216	10,40
A1148-1/4IN		5	●	DH8	5057122	10,73
A1148-6.4		5	●	DH8	5057217	11,08
A1148-6.5		5	●	DH8	5057218	10,10
A1148-LET.F		5	●	DH8	5153719	11,39
A1148-6.6		5	●	DH8	5057219	11,39
A1148-LET.G		5	●	DH8	5153720	11,91
A1148-6.7		5	●	DH8	5057220	11,91
A1148-17/64IN		5	●	DH8	5057153	12,17
A1148-LET.H		5	●	DH8	5153721	12,49

Bezeichnung / Designation	Sorte / Grade	VE / US		Disc. Gr.	Article No.	EURO Stück / piece
A1148-6.8		5	●	DH8	5057221	12,49
A1148-6.9		5	●	DH8	5057222	13,07
A1148-LET.I		5	●	DH8	5153722	13,07
A1148-7		5	●	DH8	5057223	10,60
A1148-LET.J		1	●	DH8	5153723	15,63
A1148-7.1		1	●	DH8	5057224	15,63
A1148-LET.K		1	●	DH8	5153724	15,98
A1148-9/32IN		1	●	DH8	5057256	15,98
A1148-7.2		1	●	DH8	5057225	16,26
A1148-7.3		1	●	DH8	5057226	16,48
A1148-LET.L		1	●	DH8	5153725	17,11
A1148-7.4		1	●	DH8	5057227	17,11
A1148-LET.M		1	●	DH8	5153726	12,17
A1148-7.5		1	●	DH8	5057228	12,17
A1148-19/64IN		1	●	DH8	5057158	17,11
A1148-7.6		1	●	DH8	5057229	17,97
A1148-LET.N		1	●	DH8	5153727	17,97
A1148-7.7		1	●	DH8	5057230	17,97
A1148-7.8		1	●	DH8	5057231	18,25
A1148-7.9		1	●	DH8	5057232	18,25
A1148-5/16IN		1	●	DH8	5057210	15,42
A1148-8		1	●	DH8	5057236	13,61
A1148-LET.O		1	●	DH8	5153728	18,50
A1148-8.1		1	●	DH8	5057237	18,50
A1148-8.2		1	●	DH8	5057238	18,84
A1148-LET.P		1	●	DH8	5153729	18,84
A1148-8.3		1	●	DH8	5057239	19,73
A1148-21/64IN		1	●	DH8	5057170	20,24
A1148-8.4		1	●	DH8	5057240	21,06
A1148-LET.Q		1	●	DH8	5153730	14,23
A1148-8.5		1	●	DH8	5057241	14,23
A1148-8.6		1	●	DH8	5057242	21,73
A1148-LET.R		1	●	DH8	5153731	21,98
A1148-8.7		1	●	DH8	5057243	21,98
A1148-11/32IN		1	●	DH8	5057132	23,40
A1148-8.8		1	●	DH8	5057244	23,73
A1148-LET.S		1	●	DH8	5153732	23,92
A1148-8.9		1	●	DH8	5057245	23,92
A1148-9		1	●	DH8	5057246	16,80
A1148-LET.T		1	●	DH8	5153733	24,27
A1148-9.1		1	●	DH8	5057247	24,27
A1148-23/64IN		1	●	DH8	5057171	24,92
A1148-9.2		1	●	DH8	5057248	25,40
A1148-9.3		1	●	DH8	5057249	25,60
A1148-LET.U		1	●	DH8	5153734	26,10
A1148-9.4		1	●	DH8	5057250	26,10
A1148-9.5		1	●	DH8	5057251	18,55
A1148-3/8IN		1	●	DH8	5057188	23,92
A1148-LET.V		1	●	DH8	5153735	26,80
A1148-9.6		1	●	DH8	5057252	26,80
A1148-9.7		1	●	DH8	5057253	28,60
A1148-9.8		1	●	DH8	5057254	30,00
A1148-LET.W		1	●	DH8	5153736	30,00
A1148-9.9		1	●	DH8	5057255	31,50
A1148-25/64IN		1	●	DH8	5057172	25,40
A1148-10		1	●	DH8	5057124	19,21
A1148-LET.X		1	●	DH8	5153737	34,20
A1148-10.2		1	●	DH8	5057125	34,20
A1148-LET.Y		1	●	DH8	5153738	30,50
A1148-13/32IN		1	●	DH8	5057140	30,50
A1148-LET.Z		1	●	DH8	5153739	32,00
A1148-10.5		1	●	DH8	5057126	32,00
A1148-27/64IN		1	●	DH8	5057173	37,60
A1148-10.8		1	●	DH8	5057127	43,50
A1148-11		1	●	DH8	5057128	36,40
A1148-7/16IN		1	●	DH8	5057233	34,90
A1148-11.2		1	●	DH8	5057129	45,70
A1148-11.5		1	●	DH8	5057130	37,40
A1148-29/64IN		1	●	DH8	5057174	37,60
A1148-11.8		1	●	DH8	5057131	46,90

Bezeichnung / Designation	Sorte / Grade	VE / US		Disc. Gr.	Article No.	EURO Stück / piece
A1148-15/32IN		1	●	DH8	5057147	39,00
A1148-12		1	●	DH8	5057134	37,40
A1148-31/64IN		1	●	DH8	5057189	45,40
A1148-12.5		1	●	DH8	5057135	39,00
A1148-1/2IN		1	●	DH8	5057121	43,00
A1148-12.8		1	●	DH8	5057136	50,30
A1148-13		1	●	DH8	5057137	42,50
A1148-33/64IN		1	●	DH8	5153746	51,70
A1148-13.3		1	●	DH8	5057138	51,70
A1148-17/32IN		1	●	DH8	5153741	47,40
A1148-13.5		1	●	DH8	5057139	47,40
A1148-35/64IN		1	●	DH8	5153747	48,80
A1148-14		1	●	DH8	5057142	48,80
A1148-9/16IN		1	●	DH8	5153750	51,70
A1148-14.5		1	●	DH8	5057143	51,70
A1148-37/64IN		1	●	DH8	5153748	55,70
A1148-15		1	●	DH8	5057144	55,70
A1148-19/32IN		1	●	DH8	5153742	61,50
A1148-15.3		1	●	DH8	5057145	61,50
A1148-39/64IN		1	●	DH8	5153749	60,00
A1148-15.5		1	●	DH8	5057146	60,00
A1148-5/8IN		1	●	DH8	5154975	62,50
A1148-16		1	●	DH8	5057149	62,50
A1148-41/64IN		1	●	DH8	5154974	63,00
A1148-16.5		1	●	DH8	5057150	63,00
A1148-21/32IN		1	●	DH8	5153743	63,40
A1148-17		1	●	DH8	5057151	63,40
A1148-43/64IN		1	●	DH8	5154973	65,90
A1148-11/16IN		1	●	DH8	5153740	65,90
A1148-17.5		1	●	DH8	5057152	65,90
A1148-45/64IN		1	●	DH8	5154972	66,90
A1148-18		1	●	DH8	5057154	66,90
A1148-23/32IN		1	●	DH8	5153744	67,40
A1148-18.5		1	●	DH8	5057155	67,40
A1148-47/64IN		1	●	DH8	5154971	68,30
A1148-19		1	●	DH8	5057156	68,30
A1148-3/4IN		1	●	DH8	5153745	70,30
A1148-19.5		1	●	DH8	5057157	70,30
A1148-20		1	●	DH8	5057169	72,70
A1149XPL-1	XPL	5	●	DH8	5236353	13,59
A1149XPL-N060	XPL	5	●	DH8	5337206	13,59
A1149XPL-N059	XPL	5	●	DH8	5337204	13,59
A1149XPL-N058	XPL	5	●	DH8	5337203	13,59
A1149XPL-N057	XPL	5	●	DH8	5337202	13,59
A1149XPL-1.1	XPL	5	●	DH8	5236354	13,59
A1149XPL-N056	XPL	5	●	DH8	5337201	13,59
A1149XPL-3/64IN	XPL	5	●	DH8	5337133	13,59
A1149XPL-1.2	XPL	5	●	DH8	5236355	13,59
A1149XPL-1.3	XPL	5	●	DH8	5236356	13,59
A1149XPL-N055	XPL	5	●	DH8	5337200	13,59
A1149XPL-N054	XPL	5	●	DH8	5337199	13,59
A1149XPL-1.4	XPL	5	●	DH8	5236357	13,59
A1149XPL-1.5	XPL	5	●	DH8	5236358	13,27
A1149XPL-N053	XPL	5	●	DH8	5337198	13,27
A1149XPL-1/16IN	XPL	5	●	DH8	5337141	13,27
A1149XPL-1.6	XPL	5	●	DH8	5236359	13,27
A1149XPL-N052	XPL	5	●	DH8	5337197	13,27
A1149XPL-1.7	XPL	5	●	DH8	5236370	13,27
A1149XPL-N051	XPL	5	●	DH8	5337196	13,27
A1149XPL-N050	XPL	5	●	DH8	5337195	13,27
A1149XPL-1.8	XPL	5	●	DH8	5236371	13,27
A1149XPL-N049	XPL	5	●	DH8	5337193	13,27
A1149XPL-1.9	XPL	5	●	DH8	5236372	13,27
A1149XPL-N048	XPL	5	●	DH8	5337192	13,27
A1149XPL-5/64IN	XPL	5	●	DH8	5337134	11,73
A1149XPL-N047	XPL	5	●	DH8	5337191	11,73
A1149XPL-2	XPL	5	●	DH8	5236403	11,73
A1149XPL-N046	XPL	5	●	DH8	5337190	12,65
A1149XPL-N045	XPL	5	●	DH8	5337189	12,65
A1149XPL-2.1	XPL	5	●	DH8	5236404	12,65

Bezeichnung / Designation	Sorte / Grade	VE / US		Disc. Gr.	Article No.	EURO Stück / piece
A1149XPL-N044	XPL	5	●	DH8	5337188	12,65
A1149XPL-2.2	XPL	5	●	DH8	5236405	12,65
A1149XPL-N043	XPL	5	●	DH8	5337187	13,76
A1149XPL-2.3	XPL	5	●	DH8	5236406	13,76
A1149XPL-N042	XPL	5	●	DH8	5337186	13,76
A1149XPL-3/32IN	XPL	5	●	DH8	5337128	13,76
A1149XPL-2.4	XPL	5	●	DH8	5236407	13,76
A1149XPL-N041	XPL	5	●	DH8	5337185	13,76
A1149XPL-N040	XPL	5	●	DH8	5337184	13,76
A1149XPL-2.5	XPL	5	●	DH8	5236408	13,76
A1149XPL-N039	XPL	5	●	DH8	5337182	13,76
A1149XPL-N038	XPL	5	●	DH8	5337181	13,76
A1149XPL-2.6	XPL	5	●	DH8	5236409	13,76
A1149XPL-N037	XPL	5	●	DH8	5337180	13,76
A1149XPL-2.7	XPL	5	●	DH8	5236410	13,76
A1149XPL-N036	XPL	5	●	DH8	5337179	14,25
A1149XPL-7/64IN	XPL	5	●	DH8	5337135	14,25
A1149XPL-N035	XPL	5	●	DH8	5337178	14,25
A1149XPL-2.8	XPL	5	●	DH8	5236411	14,25
A1149XPL-N034	XPL	5	●	DH8	5337177	14,25
A1149XPL-N033	XPL	5	●	DH8	5337176	14,25
A1149XPL-2.9	XPL	5	●	DH8	5236412	14,25
A1149XPL-N032	XPL	5	●	DH8	5337175	14,25
A1149XPL-3	XPL	5	●	DH8	5236414	14,25
A1149XPL-N031	XPL	1	●	DH8	5337174	14,25
A1149XPL-3.1	XPL	1	●	DH8	5236415	14,25
A1149XPL-1/8IN	XPL	1	●	DH8	5337140	13,49
A1149XPL-3.2	XPL	1	●	DH8	5236416	13,49
A1149XPL-N030	XPL	1	●	DH8	5337173	13,49
A1149XPL-3.3	XPL	1	●	DH8	5236417	13,49
A1149XPL-3.4	XPL	1	●	DH8	5236418	14,53
A1149XPL-N029	XPL	1	●	DH8	5337171	14,53
A1149XPL-3.5	XPL	1	●	DH8	5236419	14,53
A1149XPL-N028	XPL	1	●	DH8	5337170	14,85
A1149XPL-9/64IN	XPL	1	●	DH8	5337136	14,85
A1149XPL-3.6	XPL	1	●	DH8	5236420	14,85
A1149XPL-N027	XPL	1	●	DH8	5337169	15,32
A1149XPL-3.7	XPL	1	●	DH8	5236421	15,32
A1149XPL-N026	XPL	1	●	DH8	5337168	15,32
A1149XPL-N025	XPL	1	●	DH8	5337167	15,32
A1149XPL-3.8	XPL	1	●	DH8	5236422	15,32
A1149XPL-N024	XPL	1	●	DH8	5337166	15,32
A1149XPL-3.9	XPL	1	●	DH8	5236423	15,32
A1149XPL-N023	XPL	1	●	DH8	5337165	16,13
A1149XPL-5/32IN	XPL	1	●	DH8	5337129	16,13
A1149XPL-N022	XPL	1	●	DH8	5337164	16,13
A1149XPL-4	XPL	1	●	DH8	5236424	16,13
A1149XPL-N021	XPL	1	●	DH8	5337163	16,13
A1149XPL-N020	XPL	1	●	DH8	5337162	16,13
A1149XPL-4.1	XPL	1	●	DH8	5236425	16,13
A1149XPL-4.2	XPL	1	●	DH8	5236426	16,62
A1149XPL-N019	XPL	1	●	DH8	5337160	16,62
A1149XPL-4.3	XPL	1	●	DH8	5236427	16,62
A1149XPL-N018	XPL	1	●	DH8	5337159	16,62
A1149XPL-11/64IN	XPL	1	●	DH8	5337137	16,62
A1149XPL-N017	XPL	1	●	DH8	5337158	16,62
A1149XPL-4.4	XPL	1	●	DH8	5236428	16,62
A1149XPL-N016	XPL	1	●	DH8	5337157	16,85
A1149XPL-4.5	XPL	1	●	DH8	5236429	16,85
A1149XPL-N015	XPL	1	●	DH8	5337156	16,85
A1149XPL-4.6	XPL	1	●	DH8	5236430	16,85
A1149XPL-N014	XPL	1	●	DH8	5337155	17,72
A1149XPL-4.65	XPL	1	●	DH8	5236431	17,72
A1149XPL-N013	XPL	1	●	DH8	5337154	17,72
A1149XPL-4.7	XPL	1	●	DH8	5236432	17,72
A1149XPL-3/16IN	XPL	1	●	DH8	5337144	17,72
A1149XPL-4.8	XPL	1	●	DH8	5236433	17,72
A1149XPL-N012	XPL	1	●	DH8	5337153	17,72
A1149XPL-N011	XPL	1	●	DH8	5337152	17,72
A1149XPL-4.9	XPL	1	●	DH8	5236434	17,72

Bezeichnung / Designation	Sorte / Grade	VE / US		Disc. Gr.	Article No.	EURO Stück / piece
A1149XPL-N010	XPL	1	●	DH8	5337151	17,72
A1149XPL-N09	XPL	1	●	DH8	5337209	18,02
A1149XPL-5	XPL	1	●	DH8	5236435	18,02
A1149XPL-N08	XPL	1	●	DH8	5337208	18,02
A1149XPL-5.1	XPL	1	●	DH8	5236436	18,02
A1149XPL-N07	XPL	1	●	DH8	5337207	18,02
A1149XPL-13/64IN	XPL	1	●	DH8	5337237	19,08
A1149XPL-N06	XPL	1	●	DH8	5337205	19,08
A1149XPL-5.2	XPL	1	●	DH8	5236437	19,08
A1149XPL-N05	XPL	1	●	DH8	5337194	19,08
A1149XPL-5.3	XPL	1	●	DH8	5236438	19,08
A1149XPL-N04	XPL	1	●	DH8	5337183	19,08
A1149XPL-5.4	XPL	1	●	DH8	5236439	20,19
A1149XPL-N03	XPL	1	●	DH8	5337172	20,19
A1149XPL-5.5	XPL	1	●	DH8	5236440	20,19
A1149XPL-5.55	XPL	1	●	DH8	5236441	20,19
A1149XPL-7/32IN	XPL	1	●	DH8	5337130	20,19
A1149XPL-5.6	XPL	1	●	DH8	5236442	20,19
A1149XPL-N02	XPL	1	●	DH8	5337161	20,19
A1149XPL-5.7	XPL	1	●	DH8	5236443	20,19
A1149XPL-N01	XPL	1	●	DH8	5337150	20,59
A1149XPL-5.8	XPL	1	●	DH8	5236444	20,59
A1149XPL-5.9	XPL	1	●	DH8	5236445	20,59
A1149XPL-LET.A	XPL	1	●	DH8	5337210	20,59
A1149XPL-15/64IN	XPL	1	●	DH8	5337239	20,59
A1149XPL-6	XPL	1	●	DH8	5236446	20,59
A1149XPL-LET.B	XPL	1	●	DH8	5337211	29,40
A1149XPL-6.1	XPL	1	●	DH8	5236447	29,40
A1149XPL-LET.C	XPL	1	●	DH8	5337212	29,40
A1149XPL-6.2	XPL	1	●	DH8	5236448	29,40
A1149XPL-LET.D	XPL	1	●	DH8	5337213	31,20
A1149XPL-6.3	XPL	1	●	DH8	5236449	31,20
A1149XPL-1/4IN	XPL	1	●	DH8	5337139	31,20
A1149XPL-6.4	XPL	1	●	DH8	5236450	31,20
A1149XPL-6.5	XPL	1	●	DH8	5236451	27,20
A1149XPL-LET.F	XPL	1	●	DH8	5337215	27,20
A1149XPL-6.6	XPL	1	●	DH8	5236452	32,10
A1149XPL-LET.G	XPL	1	●	DH8	5337216	32,10
A1149XPL-6.7	XPL	1	●	DH8	5236453	32,10
A1149XPL-17/64IN	XPL	1	●	DH8	5337241	33,10
A1149XPL-LET.H	XPL	1	●	DH8	5337217	33,10
A1149XPL-6.8	XPL	1	●	DH8	5236454	33,10
A1149XPL-6.9	XPL	1	●	DH8	5236455	33,10
A1149XPL-LET.I	XPL	1	●	DH8	5337218	33,10
A1149XPL-7	XPL	1	●	DH8	5236456	30,00
A1149XPL-LET.J	XPL	1	●	DH8	5337219	39,90
A1149XPL-7.1	XPL	1	●	DH8	5236457	39,90
A1149XPL-LET.K	XPL	1	●	DH8	5337220	39,90
A1149XPL-9/32IN	XPL	1	●	DH8	5337131	39,90
A1149XPL-7.2	XPL	1	●	DH8	5236458	39,90
A1149XPL-7.3	XPL	1	●	DH8	5236459	39,90
A1149XPL-LET.L	XPL	1	●	DH8	5337221	39,90
A1149XPL-7.4	XPL	1	●	DH8	5236460	39,90
A1149XPL-LET.M	XPL	1	●	DH8	5337222	39,90
A1149XPL-7.5	XPL	1	●	DH8	5236461	32,40
A1149XPL-19/64IN	XPL	1	●	DH8	5337243	39,90
A1149XPL-7.6	XPL	1	●	DH8	5236462	39,90
A1149XPL-LET.N	XPL	1	●	DH8	5337223	39,90
A1149XPL-7.7	XPL	1	●	DH8	5236463	39,90
A1149XPL-7.8	XPL	1	●	DH8	5236464	41,40
A1149XPL-7.9	XPL	1	●	DH8	5236465	41,40
A1149XPL-5/16IN	XPL	1	●	DH8	5337146	41,40
A1149XPL-8	XPL	1	●	DH8	5236466	33,40
A1149XPL-LET.O	XPL	1	●	DH8	5337224	33,40
A1149XPL-8.1	XPL	1	●	DH8	5236467	42,60
A1149XPL-8.2	XPL	1	●	DH8	5236468	42,60
A1149XPL-LET.P	XPL	1	●	DH8	5337225	42,60
A1149XPL-8.3	XPL	1	●	DH8	5236469	46,70
A1149XPL-21/64IN	XPL	1	●	DH8	5337245	46,70
A1149XPL-8.4	XPL	1	●	DH8	5236470	46,70

Bezeichnung / Designation	Sorte / Grade	VE / US		Disc. Gr.	Article No.	EURO Stück / piece
A1149XPL-LET.Q	XPL	1	●	DH8	5337226	46,70
A1149XPL-8.5	XPL	1	●	DH8	5236471	34,60
A1149XPL-8.6	XPL	1	●	DH8	5236472	49,40
A1149XPL-LET.R	XPL	1	●	DH8	5337227	49,40
A1149XPL-8.7	XPL	1	●	DH8	5236473	49,40
A1149XPL-11/32IN	XPL	1	●	DH8	5337132	49,40
A1149XPL-8.8	XPL	1	●	DH8	5236474	49,40
A1149XPL-LET.S	XPL	1	●	DH8	5337228	49,40
A1149XPL-8.9	XPL	1	●	DH8	5236475	49,40
A1149XPL-9	XPL	1	●	DH8	5236476	38,00
A1149XPL-LET.T	XPL	1	●	DH8	5337229	50,30
A1149XPL-9.1	XPL	1	●	DH8	5236477	50,30
A1149XPL-23/64IN	XPL	1	●	DH8	5337247	50,30
A1149XPL-9.2	XPL	1	●	DH8	5236478	52,20
A1149XPL-9.3	XPL	1	●	DH8	5236479	52,20
A1149XPL-LET.U	XPL	1	●	DH8	5337230	53,80
A1149XPL-9.4	XPL	1	●	DH8	5236480	53,80
A1149XPL-9.5	XPL	1	●	DH8	5236481	40,50
A1149XPL-3/8IN	XPL	1	●	DH8	5337143	40,50
A1149XPL-LET.V	XPL	1	●	DH8	5337231	60,30
A1149XPL-9.6	XPL	1	●	DH8	5236482	60,30
A1149XPL-9.7	XPL	1	●	DH8	5236483	60,30
A1149XPL-9.8	XPL	1	●	DH8	5236484	60,30
A1149XPL-LET.W	XPL	1	●	DH8	5337232	60,30
A1149XPL-9.9	XPL	1	●	DH8	5236485	60,30
A1149XPL-25/64IN	XPL	1	●	DH8	5337248	42,60
A1149XPL-10	XPL	1	●	DH8	5236373	42,60
A1149XPL-LET.X	XPL	1	●	DH8	5337233	42,60
A1149XPL-10.2	XPL	1	●	DH8	5236374	65,50
A1149XPL-LET.Y	XPL	1	●	DH8	5337234	65,50
A1149XPL-13/32IN	XPL	1	●	DH8	5337236	65,50
A1149XPL-LET.Z	XPL	1	●	DH8	5337235	58,40
A1149XPL-10.5	XPL	1	●	DH8	5236375	58,40
A1149XPL-27/64IN	XPL	1	●	DH8	5337249	82,20
A1149XPL-10.8	XPL	1	●	DH8	5236376	82,20
A1149XPL-11	XPL	1	●	DH8	5236377	64,30
A1149XPL-7/16IN	XPL	1	●	DH8	5337147	64,30
A1149XPL-11.2	XPL	1	●	DH8	5236378	85,90
A1149XPL-11.3	XPL	1	●	DH8	5236379	85,90
A1149XPL-11.5	XPL	1	●	DH8	5236380	64,30
A1149XPL-29/64IN	XPL	1	●	DH8	5337250	64,30
A1149XPL-11.8	XPL	1	●	DH8	5236381	87,80
A1149XPL-15/32IN	XPL	1	●	DH8	5337238	64,30
A1149XPL-12	XPL	1	●	DH8	5236382	64,30
A1149XPL-31/64IN	XPL	1	●	DH8	5337251	71,70
A1149XPL-12.5	XPL	1	●	DH8	5236383	71,70
A1149XPL-1/2IN	XPL	1	●	DH8	5337138	76,60
A1149XPL-12.8	XPL	1	●	DH8	5236384	76,60
A1149XPL-13	XPL	1	●	DH8	5236385	84,70
A1149XPL-33/64IN	XPL	1	●	DH8	5337252	97,70
A1149XPL-13.1	XPL	1	●	DH8	5236386	97,70
A1149XPL-13.3	XPL	1	●	DH8	5236387	97,70
A1149XPL-17/32IN	XPL	1	●	DH8	5337240	93,50
A1149XPL-13.5	XPL	1	●	DH8	5236388	93,50
A1149XPL-35/64IN	XPL	1	●	DH8	5337253	101,00
A1149XPL-14	XPL	1	●	DH8	5236389	101,00
A1149XPL-9/16IN	XPL	1	●	DH8	5337148	109,00
A1149XPL-14.5	XPL	1	●	DH8	5236390	109,00
A1149XPL-37/64IN	XPL	1	●	DH8	5337254	116,00
A1149XPL-15	XPL	1	●	DH8	5236391	116,00
A1149XPL-19/32IN	XPL	1	●	DH8	5337242	120,00
A1149XPL-15.1	XPL	1	●	DH8	5236392	120,00
A1149XPL-15.3	XPL	1	●	DH8	5236393	120,00
A1149XPL-39/64IN	XPL	1	●	DH8	5337255	124,00
A1149XPL-15.5	XPL	1	●	DH8	5236394	124,00
A1149XPL-5/8IN	XPL	1	●	DH8	5337145	128,00
A1149XPL-16	XPL	1	●	DH8	5236395	131,00
A1149XPL-41/64IN	XPL	1	●	DH8	5337256	135,00
A1149XPL-16.5	XPL	1	●	DH8	5236396	139,00
A1149XPL-21/32IN	XPL	1	●	DH8	5337244	143,00

Bezeichnung / Designation	Sorte / Grade	VE / US		Disc. Gr.	Article No.	EURO Stück / piece
A1149XPL-17	XPL	1	●	DH8	5236397	147,00
A1149XPL-43/64IN	XPL	1	●	DH8	5337257	147,00
A1149XPL-11/16IN	XPL	1	●	DH8	5337149	154,00
A1149XPL-17.5	XPL	1	●	DH8	5236398	154,00
A1149XPL-45/64IN	XPL	1	●	DH8	5337258	162,00
A1149XPL-18	XPL	1	●	DH8	5236399	162,00
A1149XPL-23/32IN	XPL	1	●	DH8	5337246	166,00
A1149XPL-18.5	XPL	1	●	DH8	5236400	169,00
A1149XPL-47/64IN	XPL	1	●	DH8	5337259	173,00
A1149XPL-19	XPL	1	●	DH8	5236401	177,00
A1149XPL-3/4IN	XPL	1	●	DH8	5337142	177,00
A1149XPL-19.5	XPL	1	●	DH8	5236402	185,00
A1149XPL-20	XPL	1	●	DH8	5236413	192,00
A1154TFT-2	TFT	5	●	DHB	5200081	11,20
A1154TFT-2.1	TFT	5	●	DHB	5200082	13,24
A1154TFT-2.2	TFT	5	●	DHB	5200083	12,81
A1154TFT-2.3	TFT	5	●	DHB	5200084	12,96
A1154TFT-2.4	TFT	5	●	DHB	5200085	13,11
A1154TFT-2.5	TFT	5	●	DHB	5200087	12,05
A1154TFT-2.6	TFT	5	●	DHB	5200088	12,96
A1154TFT-2.7	TFT	5	●	DHB	5200086	12,67
A1154TFT-2.8	TFT	5	●	DHB	5200089	12,39
A1154TFT-2.9	TFT	5	●	DHB	5200090	13,11
A1154TFT-3	TFT	5	●	DHB	5200091	12,05
A1154TFT-3.1	TFT	1	●	DHB	5200092	14,58
A1154TFT-3.2	TFT	1	●	DHB	5200093	14,27
A1154TFT-3.3	TFT	1	●	DHB	5200094	13,99
A1154TFT-3.4	TFT	1	●	DHB	5200095	15,15
A1154TFT-3.5	TFT	1	●	DHB	5200096	14,41
A1154TFT-3.6	TFT	1	●	DHB	5200097	16,50
A1154TFT-3.7	TFT	1	●	DHB	5200098	16,21
A1154TFT-3.8	TFT	1	●	DHB	5200099	15,62
A1154TFT-3.9	TFT	1	●	DHB	5200100	16,06
A1154TFT-4	TFT	1	●	DHB	5200101	15,46
A1154TFT-4.1	TFT	1	●	DHB	5200102	18,84
A1154TFT-4.2	TFT	1	●	DHB	5200103	17,37
A1154TFT-4.3	TFT	1	●	DHB	5200104	19,15
A1154TFT-4.4	TFT	1	●	DHB	5200105	19,15
A1154TFT-4.5	TFT	1	●	DHB	5200106	17,83
A1154TFT-4.6	TFT	1	●	DHB	5200107	21,80
A1154TFT-4.65	TFT	1	●	DHB	5200108	22,22
A1154TFT-4.7	TFT	1	●	DHB	5200109	22,10
A1154TFT-4.8	TFT	1	●	DHB	5200110	20,92
A1154TFT-4.9	TFT	1	●	DHB	5200111	21,34
A1154TFT-5	TFT	1	●	DHB	5200112	23,30
A1154TFT-5.1	TFT	1	●	DHB	5200113	24,32
A1154TFT-5.2	TFT	1	●	DHB	5200114	24,00
A1154TFT-5.3	TFT	1	●	DHB	5200115	26,10
A1154TFT-5.4	TFT	1	●	DHB	5200116	25,80
A1154TFT-5.5	TFT	1	●	DHB	5200117	23,42
A1154TFT-5.55	TFT	1	●	DHB	5200118	28,30
A1154TFT-5.6	TFT	1	●	DHB	5200119	28,70
A1154TFT-5.7	TFT	1	●	DHB	5200120	27,70
A1154TFT-5.8	TFT	1	●	DHB	5200121	26,80
A1154TFT-5.9	TFT	1	●	DHB	5200128	28,70
A1154TFT-6	TFT	1	●	DHB	5200129	25,50
A1154TFT-6.1	TFT	1	●	DHB	5200130	30,60
A1154TFT-6.2	TFT	1	●	DHB	5200131	31,70
A1154TFT-6.3	TFT	1	●	DHB	5200132	31,70
A1154TFT-6.4	TFT	1	●	DHB	5200133	30,60
A1154TFT-6.5	TFT	1	●	DHB	5200122	30,60
A1154TFT-6.6	TFT	1	●	DHB	5200123	32,10
A1154TFT-6.7	TFT	1	●	DHB	5200124	32,10
A1154TFT-6.8	TFT	1	●	DHB	5200125	30,60
A1154TFT-6.9	TFT	1	●	DHB	5200126	32,10
A1154TFT-7	TFT	1	●	DHB	5200127	30,60
A1154TFT-7.1	TFT	1	●	DHB	5200134	34,00
A1154TFT-7.2	TFT	1	●	DHB	5200135	34,20
A1154TFT-7.3	TFT	1	●	DHB	5200136	34,30
A1154TFT-7.4	TFT	1	●	DHB	5200137	34,60

Bezeichnung / Designation	Sorte / Grade	VE / US		Disc. Gr.	Article No.	EURO Stück / piece
A1154TFT-7.5	TFT	1	●	DHB	5200138	33,90
A1154TFT-7.6	TFT	1	●	DHB	5200139	33,60
A1154TFT-7.7	TFT	1	●	DHB	5200140	33,70
A1154TFT-7.8	TFT	1	●	DHB	5200141	33,10
A1154TFT-7.9	TFT	1	●	DHB	5200142	34,30
A1154TFT-8	TFT	1	●	DHB	5200143	34,60
A1154TFT-8.1	TFT	1	●	DHB	5200144	38,10
A1154TFT-8.2	TFT	1	●	DHB	5200145	37,40
A1154TFT-8.3	TFT	1	●	DHB	5200146	38,90
A1154TFT-8.4	TFT	1	●	DHB	5200147	37,30
A1154TFT-8.5	TFT	1	●	DHB	5200148	36,50
A1154TFT-8.6	TFT	1	●	DHB	5200149	41,30
A1154TFT-8.7	TFT	1	●	DHB	5200150	41,40
A1154TFT-8.8	TFT	1	●	DHB	5200151	38,60
A1154TFT-8.9	TFT	1	●	DHB	5200152	40,20
A1154TFT-9	TFT	1	●	DHB	5200153	38,80
A1154TFT-9.1	TFT	1	●	DHB	5200154	43,90
A1154TFT-9.2	TFT	1	●	DHB	5200155	43,50
A1154TFT-9.3	TFT	1	●	DHB	5200156	44,30
A1154TFT-9.4	TFT	1	●	DHB	5200157	42,30
A1154TFT-9.5	TFT	1	●	DHB	5200158	42,90
A1154TFT-9.6	TFT	1	●	DHB	5200159	47,40
A1154TFT-9.7	TFT	1	●	DHB	5200168	45,50
A1154TFT-9.8	TFT	1	●	DHB	5200167	46,00
A1154TFT-9.9	TFT	1	●	DHB	5200166	47,90
A1154TFT-10	TFT	1	●	DHB	5199989	44,90
A1154TFT-10.2	TFT	1	●	DHB	5200040	55,20
A1154TFT-10.3	TFT	1	●	DHB	5200041	56,70
A1154TFT-10.5	TFT	1	●	DHB	5200042	58,60
A1154TFT-10.6	TFT	1	●	DHB	5200043	63,30
A1154TFT-10.7	TFT	1	●	DHB	5200044	63,30
A1154TFT-10.8	TFT	1	●	DHB	5200045	61,10
A1154TFT-10.9	TFT	1	●	DHB	5200046	63,30
A1154TFT-11	TFT	1	●	DHB	5200047	61,10
A1154TFT-11.1	TFT	1	●	DHB	5200048	65,80
A1154TFT-11.2	TFT	1	●	DHB	5200049	69,20
A1154TFT-11.3	TFT	1	●	DHB	5200050	65,10
A1154TFT-11.5	TFT	1	●	DHB	5200051	69,20
A1154TFT-11.6	TFT	1	●	DHB	5200052	71,60
A1154TFT-11.8	TFT	1	●	DHB	5200053	71,40
A1154TFT-11.9	TFT	1	●	DHB	5200054	73,90
A1154TFT-12	TFT	1	●	DHB	5200055	70,70
A1154TFT-12.1	TFT	1	●	DHB	5200056	84,50
A1154TFT-12.3	TFT	1	●	DHB	5200057	87,50
A1154TFT-12.5	TFT	1	●	DHB	5200058	84,50
A1154TFT-12.6	TFT	1	●	DHB	5200059	90,30
A1154TFT-12.7	TFT	1	●	DHB	5200060	91,90
A1154TFT-13	TFT	1	●	DHB	5200073	88,80
A1154TFT-13.1	TFT	1	●	DHB	5200071	138,00
A1154TFT-13.2	TFT	1	●	DHB	5200064	199,00
A1154TFT-13.3	TFT	1	●	DHB	5200061	137,00
A1154TFT-13.4	TFT	1	●	DHB	5200062	199,00
A1154TFT-13.5	TFT	1	●	DHB	5200063	139,00
A1154TFT-13.6	TFT	1	●	DHB	5200065	208,00
A1154TFT-14	TFT	1	●	DHB	5200066	130,00
A1154TFT-14.1	TFT	1	●	DHB	5200067	208,00
A1154TFT-14.2	TFT	1	●	DHB	5200068	208,00
A1154TFT-14.5	TFT	1	●	DHB	5200069	149,00
A1154TFT-14.8	TFT	1	●	DHB	5200070	228,00
A1154TFT-15	TFT	1	●	DHB	5200072	155,00
A1154TFT-15.1	TFT	1	●	DHB	5200074	162,00
A1154TFT-15.2	TFT	1	●	DHB	5200075	242,00
A1154TFT-15.3	TFT	1	●	DHB	5200076	242,00
A1154TFT-15.5	TFT	1	●	DHB	5200078	162,00
A1154TFT-15.8	TFT	1	●	DHB	5200079	242,00
A1154TFT-16	TFT	1	●	DHB	5200080	168,00
A1163-1		1	●	DS2	5057533	8,57
A1163-1.1		1	●	DS2	5057534	8,57
A1163-1.2		1	●	DS2	5057535	8,57
A1163-1.3		1	●	DS2	5057536	8,57

Bezeichnung / Designation	Sorte / Grade	VE / US		Disc. Gr.	Article No.	EURO Stück / piece
A1163-1.4		1	●	DS2	5057537	8,57
A1163-1.5		1	●	DS2	5057538	8,57
A1163-1.6		1	●	DS2	5057539	8,57
A1163-1.7		1	●	DS2	5057540	8,57
A1163-1.8		1	●	DS2	5057541	8,57
A1163-1.9		1	●	DS2	5057542	8,57
A1163-2		1	●	DS2	5057549	8,57
A1163-2.1		1	●	DS2	5057550	11,93
A1163-2.2		1	●	DS2	5057551	11,93
A1163-2.3		1	●	DS2	5057552	11,93
A1163-2.4		1	●	DS2	5057553	11,93
A1163-2.5		1	●	DS2	5057554	11,93
A1163-2.6		1	●	DS2	5057555	11,93
A1163-2.7		1	●	DS2	5057556	11,93
A1163-2.8		1	●	DS2	5057557	11,93
A1163-2.9		1	●	DS2	5057558	11,93
A1163-3		1	●	DS2	5057559	17,15
A1163-3.1		1	●	DS2	5057560	17,15
A1163-3.2		1	●	DS2	5057561	17,15
A1163-3.3		1	●	DS2	5057562	17,15
A1163-3.4		1	●	DS2	5057563	17,15
A1163-3.5		1	●	DS2	5057564	17,15
A1163-3.6		1	●	DS2	5057565	17,15
A1163-3.7		1	●	DS2	5057566	17,15
A1163-3.8		1	●	DS2	5057567	17,15
A1163-3.9		1	●	DS2	5057568	17,15
A1163-4		1	●	DS2	5057569	17,15
A1163-4.1		1	●	DS2	5057570	24,84
A1163-4.2		1	●	DS2	5057571	24,84
A1163-4.3		1	●	DS2	5057572	24,84
A1163-4.4		1	●	DS2	5057573	24,84
A1163-4.5		1	●	DS2	5057574	24,84
A1163-4.6		1	●	DS2	5057575	24,84
A1163-4.7		1	●	DS2	5057576	24,84
A1163-4.8		1	●	DS2	5057577	24,84
A1163-4.9		1	●	DS2	5057578	24,84
A1163-5		1	●	DS2	5057579	24,84
A1163-5.1		1	●	DS2	5110393	32,30
A1163-5.2		1	●	DS2	5057581	32,30
A1163-5.3		1	●	DS2	5057582	32,30
A1163-5.4		1	●	DS2	5057583	32,30
A1163-5.5		1	●	DS2	5057584	32,30
A1163-5.6		1	●	DS2	5057585	32,30
A1163-5.7		1	●	DS2	5057586	32,30
A1163-5.8		1	●	DS2	5057587	32,30
A1163-5.9		1	●	DS2	5057588	32,30
A1163-6		1	●	DS2	5057589	32,30
A1163-6.1		1	●	DS2	5057590	41,70
A1163-6.2		1	●	DS2	5057591	41,70
A1163-6.3		1	●	DS2	5057592	41,70
A1163-6.4		1	●	DS2	5057593	41,70
A1163-6.5		1	●	DS2	5057594	41,70
A1163-6.6		1	●	DS2	5057595	41,70
A1163-6.7		1	●	DS2	5057596	41,70
A1163-6.8		1	●	DS2	5057597	41,70
A1163-6.9		1	●	DS2	5057598	41,70
A1163-7		1	●	DS2	5057599	41,70
A1163-7.1		1	●	DS2	5057600	41,70
A1163-7.2		1	●	DS2	5057601	41,70
A1163-7.3		1	●	DS2	5057602	41,70
A1163-7.4		1	●	DS2	5057603	41,70
A1163-7.5		1	●	DS2	5057604	41,70
A1163-7.6		1	●	DS2	5057605	41,70
A1163-7.7		1	●	DS2	5057606	41,70
A1163-7.8		1	●	DS2	5057607	41,70
A1163-7.9		1	●	DS2	5057608	41,70
A1163-8		1	●	DS2	5057609	41,70
A1163-8.1		1	●	DS2	5057610	48,70
A1163-8.2		1	●	DS2	5057611	48,70
A1163-8.3		1	●	DS2	5057612	48,70

Bezeichnung / Designation	Sorte / Grade	VE / US		Disc. Gr.	Article No.	EURO Stück / piece
A1163-8.4		1	●	DS2	5057613	48,70
A1163-8.5		1	●	DS2	5057614	48,70
A1163-8.6		1	●	DS2	5057615	48,70
A1163-8.7		1	●	DS2	5057616	48,70
A1163-8.8		1	●	DS2	5113307	48,70
A1163-9		1	●	DS2	5057619	48,70
A1163-9.3		1	●	DS2	5057622	48,70
A1163-9.5		1	●	DS2	5057624	48,70
A1163-9.7		1	●	DS2	5057626	48,70
A1163-9.8		1	●	DS2	5057627	48,70
A1163-10		1	●	DS2	5057543	48,70
A1163-10.2		1	●	DS2	5057544	66,10
A1163-10.5		1	●	DS2	5057545	66,10
A1163-11		1	●	DS2	5057546	66,10
A1163-11.5		1	●	DS2	5057547	66,10
A1163-12		1	●	DS2	5057548	66,10
A1166-3		1	●	DS2	5057855	29,10
A1166-3.1		1	●	DS2	5057856	28,00
A1166-1/8IN		1	○	DS2	5153927	28,00
A1166-3.2		1	●	DS2	5057857	28,00
A1166-3.3		1	●	DS2	5057858	28,00
A1166-3.4		1	●	DS2	5057859	28,00
A1166-3.5		1	●	DS2	5057860	29,60
A1166-9/64IN		1	●	DS2	5153953	33,60
A1166-3.6		1	●	DS2	5057861	33,60
A1166-3.7		1	●	DS2	5057862	33,60
A1166-3.8		1	●	DS2	5057863	33,60
A1166-3.9		1	●	DS2	5057864	33,60
A1166-4		1	●	DS2	5057865	30,90
A1166-4.1		1	●	DS2	5057866	34,60
A1166-4.2		1	●	DS2	5057867	32,50
A1166-4.3		1	●	DS2	5057868	34,60
A1166-4.4		1	●	DS2	5057869	37,00
A1166-4.5		1	●	DS2	5057870	33,60
A1166-4.6		1	●	DS2	5057871	39,40
A1166-4.7		1	●	DS2	5057872	39,40
A1166-3/16IN		1	●	DS2	5153943	39,40
A1166-4.8		1	●	DS2	5057873	39,40
A1166-4.9		1	●	DS2	5057874	39,40
A1166-5		1	●	DS2	5057875	34,60
A1166-5.1		1	●	DS2	5057876	44,70
A1166-13/64IN		1	○	DS2	5153942	44,70
A1166-5.2		1	●	DS2	5057877	44,70
A1166-5.3		1	●	DS2	5057878	44,70
A1166-5.4		1	●	DS2	5057879	44,70
A1166-5.5		1	●	DS2	5057880	41,00
A1166-5.6		1	●	DS2	5057881	46,00
A1166-5.7		1	●	DS2	5057882	46,00
A1166-5.8		1	●	DS2	5057883	46,00
A1166-6		1	●	DS2	5057885	43,10
A1166-6.1		1	●	DS2	5057886	53,90
A1166-6.2		1	●	DS2	5057887	53,90
A1166-6.3		1	●	DS2	5057888	53,90
A1166-1/4IN		1	○	DS2	5153926	53,90
A1166-6.4		1	●	DS2	5057889	53,90
A1166-6.5		1	●	DS2	5057890	48,90
A1166-6.6		1	●	DS2	5057891	56,10
A1166-6.7		1	●	DS2	5057892	56,10
A1166-6.8		1	●	DS2	5057893	56,10
A1166-6.9		1	●	DS2	5057894	56,10
A1166-7		1	●	DS2	5057895	57,10
A1166-7.1		1	●	DS2	5057896	67,70
A1166-7.2		1	●	DS2	5057897	67,70
A1166-7.3		1	●	DS2	5057898	67,70
A1166-7.4		1	●	DS2	5057899	67,70
A1166-7.5		1	●	DS2	5057900	61,30
A1166-7.8		1	●	DS2	5057903	74,00
A1166-8		1	●	DS2	5057905	67,70
A1166-8.1		1	●	DS2	5057906	83,00
A1166-8.2		1	●	DS2	5057907	83,00

Bezeichnung / Designation	Sorte / Grade	VE / US		Disc. Gr.	Article No.	EURO Stück / piece
A1166-8.3		1	●	DS2	5057908	83,00
A1166-8.5		1	●	DS2	5057910	77,70
A1166-8.6		1	●	DS2	5057911	89,40
A1166-8.8		1	●	DS2	5057617	89,40
A1166-9		1	●	DS2	5057915	81,40
A1166-9.5		1	●	DS2	5057920	86,70
A1166-9.6		1	●	DS2	5057921	102,00
A1166-9.8		1	●	DS2	5057923	102,00
A1166-10		1	●	DS2	5057786	93,00
A1166-10.2		1	●	DS2	5057788	110,00
A1166-10.3		1	●	DS2	5057789	125,00
A1166-11		1	●	DS2	5057796	125,00
A1166-11.8		1	●	DS2	5057804	199,00
A1166-12		1	●	DS2	5057806	177,00
A1166-12.5		1	●	DS2	5057811	185,00
A1166-12.9		1	○	DS2	5057815	215,00
A1166-13		1	●	DS2	5057816	196,00
A1166-14		1	●	DS2	5057826	217,00
A1166-15		1	●	DS2	5057836	242,00
A1166-18		1	●	DS2	5057850	338,00
A1166TIN-3	TIN	1	●	DS2	5057948	40,80
A1166TIN-3.3	TIN	1	●	DS2	5057949	39,10
A1166TIN-4	TIN	1	●	DS2	5057951	42,80
A1166TIN-4.2	TIN	1	●	DS2	5057952	44,00
A1166TIN-4.5	TIN	1	●	DS2	5057953	45,80
A1166TIN-5	TIN	1	●	DS2	5057955	46,60
A1166TIN-5.5	TIN	1	●	DS2	5057956	53,90
A1166TIN-6	TIN	1	●	DS2	5057957	55,10
A1166TIN-6.8	TIN	1	●	DS2	5057959	78,10
A1166TIN-7	TIN	1	●	DS2	5057960	80,40
A1166TIN-7.8	TIN	1	●	DS2	5057963	85,70
A1166TIN-8	TIN	1	●	DS2	5057964	83,90
A1166TIN-10	TIN	1	●	DS2	5057925	121,00
A1166TIN-10.5	TIN	1	●	DS2	5057927	146,00
A1166TIN-14	TIN	1	●	DS2	5057935	259,00
A1174-3		1	●	DS2	5058251	30,90
A1174-4		1	●	DS2	5058252	33,00
A1174-5		1	●	DS2	5058253	33,00
A1174-6		1	●	DS2	5058254	34,60
A1174-1/4IN		1	●	DS2	5153956	39,60
A1174-8		1	●	DS2	5058255	54,50
A1174-3/8IN		1	●	DS2	5153957	77,70
A1174-10		1	●	DS2	5058247	77,70
A1174-12		1	●	DS2	5058248	104,00
A1174-1/2IN		1	●	DS2	5153955	118,00
A1174-16		1	●	DS2	5058249	189,00
A1174-20		1	●	DS2	5058250	332,00
A1174C-3		1	●	DS2	5058259	30,90
A1174C-4		1	●	DS2	5058260	33,00
A1174C-5		1	●	DS2	5058261	33,00
A1174C-6		1	●	DS2	5058262	34,60
A1174C-1/4IN		1	○	DS2	5155259	39,60
A1174C-8		1	●	DS2	5058263	54,50
A1174C-3/8IN		1	●	DS2	5155261	77,70
A1174C-10		1	●	DS2	5058256	77,70
A1174C-12		1	●	DS2	5058257	104,00
A1174C-1/2IN		1	○	DS2	5155266	118,00
A1174C-16		1	●	DS2	5058258	189,00
A1174C-20		1	●	DS2	5155260	332,00
A1211-0.2		10	●	DH4	5058382	7,75
A1211-0.22		10	●	DH4	5058384	7,89
A1211-0.23		10	●	DH4	5058385	7,89
A1211-0.25		10	●	DH4	5058387	7,43
A1211-0.27		10	●	DH4	5058389	7,43
A1211-0.28		10	●	DH4	5058390	7,43
A1211-0.29		10	●	DH4	5058391	7,43
A1211-0.3		10	●	DH4	5058392	5,50
A1211-0.31		10	●	DH4	5058393	6,96
A1211-N082		10	●	DH4	5058370	6,96
A1211-0.32		10	●	DH4	5058394	6,96

Bezeichnung / Designation	Sorte / Grade	VE / US		Disc. Gr.	Article No.	EURO Stück / piece
A1211-0.33		10	●	DH4	5058395	6,96
A1211-0.34		10	●	DH4	5058396	6,96
A1211-N080		10	●	DH4	5058368	6,96
A1211-0.35		10	●	DH4	5058397	6,60
A1211-N079		10	●	DH4	5058366	6,60
A1211-0.38		10	●	DH4	5058400	6,60
A1211-1/64IN		10	●	DH4	5058566	4,57
A1211-0.4		10	●	DH4	5058402	4,57
A1211-N078		10	●	DH4	5058365	6,33
A1211-0.42		10	●	DH4	5058404	6,33
A1211-0.43		10	●	DH4	5058405	6,33
A1211-0.45		10	●	DH4	5058407	5,93
A1211-N077		10	●	DH4	5058364	6,20
A1211-0.47		10	●	DH4	5058409	6,20
A1211-0.48		10	●	DH4	5058410	6,20
A1211-0.49		10	●	DH4	5058411	6,20
A1211-0.5		10	●	DH4	5058412	3,70
A1211-N076		10	●	DH4	5058363	5,93
A1211-0.51		10	●	DH4	5058413	5,93
A1211-0.52		10	●	DH4	5058414	5,93
A1211-0.53		10	●	DH4	5058415	5,88
A1211-N075		10	●	DH4	5058362	5,88
A1211-0.54		10	●	DH4	5058416	5,88
A1211-0.55		10	●	DH4	5058417	5,16
A1211-0.57		10	●	DH4	5058419	5,69
A1211-N074		10	●	DH4	5058361	5,69
A1211-0.58		10	●	DH4	5058420	5,69
A1211-0.59		10	●	DH4	5058421	5,69
A1211-0.6		10	●	DH4	5058422	3,62
A1211-N073		10	●	DH4	5058360	5,50
A1211-0.62		10	●	DH4	5058424	5,50
A1211-0.63		10	●	DH4	5058425	5,50
A1211-N072		10	●	DH4	5058359	5,50
A1211-0.65		10	●	DH4	5058427	4,60
A1211-N071		10	●	DH4	5058358	5,41
A1211-0.67		10	●	DH4	5058429	5,41
A1211-0.68		10	●	DH4	5058430	5,41
A1211-0.7		10	●	DH4	5058432	3,39
A1211-N070		10	●	DH4	5058357	5,16
A1211-0.72		10	●	DH4	5058434	5,16
A1211-0.73		10	●	DH4	5058435	5,16
A1211-N069		10	●	DH4	5058355	5,16
A1211-0.75		10	●	DH4	5058437	3,99
A1211-0.76		10	●	DH4	5058438	4,91
A1211-0.78		10	●	DH4	5058440	4,91
A1211-N068		10	●	DH4	5058354	4,91
A1211-1/32IN		10	●	DH4	5058564	4,91
A1211-0.8		10	●	DH4	5058442	3,17
A1211-0.81		10	●	DH4	5058443	4,74
A1211-N067		10	●	DH4	5058353	4,74
A1211-0.82		10	●	DH4	5058444	4,74
A1211-0.83		10	●	DH4	5058445	4,74
A1211-N066		10	●	DH4	5058352	4,74
A1211-0.85		10	●	DH4	5058447	3,80
A1211-0.87		10	●	DH4	5058449	4,60
A1211-0.88		10	●	DH4	5058450	4,60
A1211-N065		10	●	DH4	5058351	4,60
A1211-0.9		10	●	DH4	5058452	3,01
A1211-0.91		10	●	DH4	5058453	4,57
A1211-N064		10	●	DH4	5058350	4,57
A1211-0.92		10	●	DH4	5058454	4,57
A1211-N063		10	●	DH4	5058349	4,57
A1211-0.95		10	●	DH4	5058457	3,62
A1211-0.96		10	●	DH4	5058458	4,52
A1211-N062		10	●	DH4	5058348	4,52
A1211-0.97		10	●	DH4	5058459	4,52
A1211-0.98		10	●	DH4	5058460	4,52
A1211-0.99		10	●	DH4	5058461	4,52
A1211-N061		10	●	DH4	5058347	4,52
A1211-1		10	●	DH4	5058462	2,93

Bezeichnung / Designation	Sorte / Grade	VE / US		Disc. Gr.	Article No.	EURO Stück / piece
A1211-1.01		10	●	DH4	5058463	4,28
A1211-N060		10	●	DH4	5058346	4,28
A1211-1.02		10	●	DH4	5058464	4,28
A1211-1.03		10	●	DH4	5058465	4,28
A1211-1.04		10	●	DH4	5058466	4,28
A1211-N059		10	●	DH4	5058344	4,28
A1211-1.05		10	●	DH4	5058467	3,27
A1211-N058		10	●	DH4	5058343	4,22
A1211-N057		10	●	DH4	5058342	4,22
A1211-1.1		10	●	DH4	5058472	2,88
A1211-1.12		10	●	DH4	5058474	4,22
A1211-1.13		10	●	DH4	5058475	4,22
A1211-1.15		10	●	DH4	5058477	3,17
A1211-1.18		10	●	DH4	5058480	4,14
A1211-N056		10	●	DH4	5058341	4,14
A1211-3/64IN		10	●	DH4	5058738	2,93
A1211-1.2		10	●	DH4	5058482	2,93
A1211-1.21		10	●	DH4	5058483	4,08
A1211-1.22		10	●	DH4	5058484	4,08
A1211-1.23		10	●	DH4	5058485	4,08
A1211-1.24		10	●	DH4	5058486	4,08
A1211-1.25		10	●	DH4	5058487	3,10
A1211-1.27		10	●	DH4	5058489	4,08
A1211-1.28		10	●	DH4	5058490	4,08
A1211-1.3		10	●	DH4	5058492	2,82
A1211-N055		10	●	DH4	5058340	4,08
A1211-1.33		10	●	DH4	5058495	4,08
A1211-1.35		10	●	DH4	5058497	3,01
A1211-1.36		10	●	DH4	5058498	4,08
A1211-1.37		10	●	DH4	5058499	4,08
A1211-N054		10	●	DH4	5058339	2,71
A1211-1.4		10	●	DH4	5058502	2,71
A1211-1.42		10	●	DH4	5058504	3,99
A1211-1.43		10	●	DH4	5058505	3,99
A1211-1.45		10	●	DH4	5058507	2,88
A1211-1.49		10	●	DH4	5058511	3,99
A1211-1.5		10	●	DH4	5058512	2,49
A1211-1.51		10	●	DH4	5058513	3,99
A1211-N053		10	●	DH4	5058338	3,99
A1211-1.52		10	●	DH4	5058514	3,99
A1211-1.53		10	●	DH4	5058515	3,99
A1211-1.55		10	●	DH4	5058517	2,78
A1211-1.57		10	●	DH4	5058519	3,99
A1211-1/16IN		10	●	DH4	5058562	2,56
A1211-1.6		10	●	DH4	5058522	2,45
A1211-N052		10	●	DH4	5058337	3,99
A1211-1.63		10	●	DH4	5058525	3,99
A1211-1.65		10	●	DH4	5058527	2,71
A1211-1.7		10	●	DH4	5058532	2,45
A1211-N051		10	●	DH4	5058336	2,45
A1211-1.75		10	●	DH4	5058537	2,68
A1211-N050		10	●	DH4	5058335	3,96
A1211-1.8		10	●	DH4	5058542	2,22
A1211-1.85		10	●	DH4	5058547	2,61
A1211-N049		10	●	DH4	5058333	2,61
A1211-1.9		10	●	DH4	5058552	2,24
A1211-N048		10	●	DH4	5058332	3,57
A1211-1.95		10	●	DH4	5058557	2,56
A1211-5/64IN		10	●	DH4	5058793	2,49
A1211-N047		10	●	DH4	5058331	2,49
A1211-2		10	●	DH4	5058679	1,85
A1211-2.05		10	●	DH4	5058680	2,56
A1211-N046		10	●	DH4	5058330	3,70
A1211-N045		10	●	DH4	5058329	3,70
A1211-2.1		10	●	DH4	5058681	2,22
A1211-2.15		10	●	DH4	5058682	2,61
A1211-N044		10	●	DH4	5058328	2,61
A1211-2.2		10	●	DH4	5058683	2,24
A1211-2.25		10	●	DH4	5058684	2,68
A1211-N043		10	●	DH4	5058327	2,68

Bezeichnung / Designation	Sorte / Grade	VE / US		Disc. Gr.	Article No.	EURO Stück / piece
A1211-2.3		10	●	DH4	5058685	2,24
A1211-2.35		10	●	DH4	5058686	2,68
A1211-N042		10	●	DH4	5058326	2,68
A1211-3/32IN		10	●	DH4	5058736	2,35
A1211-2.4		10	●	DH4	5058687	2,35
A1211-N041		10	●	DH4	5058325	2,71
A1211-2.45		10	●	DH4	5058688	2,71
A1211-N040		10	●	DH4	5058324	2,71
A1211-2.5		10	●	DH4	5058689	2,35
A1211-N039		10	●	DH4	5058322	2,71
A1211-2.55		10	●	DH4	5058690	2,71
A1211-N038		10	●	DH4	5058321	2,71
A1211-2.6		10	●	DH4	5058691	2,45
A1211-N037		10	●	DH4	5058320	2,71
A1211-2.65		10	●	DH4	5058692	2,71
A1211-2.7		10	●	DH4	5058693	2,45
A1211-N036		10	●	DH4	5058319	2,45
A1211-2.75		10	●	DH4	5058694	2,78
A1211-7/64IN		10	●	DH4	5058838	2,61
A1211-N035		10	●	DH4	5058318	3,57
A1211-2.8		10	●	DH4	5058695	2,45
A1211-N034		10	●	DH4	5058317	2,78
A1211-2.85		10	●	DH4	5058696	2,78
A1211-N033		10	●	DH4	5058316	2,78
A1211-2.9		10	●	DH4	5058697	2,45
A1211-N032		10	●	DH4	5058315	3,01
A1211-2.95		10	●	DH4	5058698	2,78
A1211-3		10	●	DH4	5058715	2,10
A1211-N031		10	●	DH4	5058314	2,82
A1211-3.05		10	●	DH4	5058716	2,82
A1211-3.1		10	●	DH4	5058717	2,56
A1211-3.15		10	●	DH4	5058718	2,82
A1211-1/8IN		10	●	DH4	5058567	2,15
A1211-3.2		10	●	DH4	5058719	2,56
A1211-3.25		10	●	DH4	5058720	2,82
A1211-N030		10	●	DH4	5058313	2,82
A1211-3.3		10	●	DH4	5058721	2,61
A1211-3.35		10	●	DH4	5058722	3,01
A1211-3.4		10	●	DH4	5058723	2,56
A1211-3.45		10	●	DH4	5058724	3,06
A1211-N029		10	●	DH4	5058311	3,06
A1211-3.5		10	●	DH4	5058725	2,35
A1211-3.55		10	●	DH4	5058726	3,22
A1211-N028		10	●	DH4	5058310	2,78
A1211-9/64IN		10	●	DH4	5058882	2,78
A1211-3.6		10	●	DH4	5058727	2,78
A1211-3.65		10	●	DH4	5058728	3,27
A1211-N027		10	●	DH4	5058309	3,27
A1211-3.7		10	●	DH4	5058729	2,88
A1211-N026		10	●	DH4	5058308	3,39
A1211-3.75		10	●	DH4	5058730	3,39
A1211-N025		10	●	DH4	5058307	2,93
A1211-3.8		10	●	DH4	5058731	2,93
A1211-N024		10	●	DH4	5058306	3,49
A1211-3.9		10	●	DH4	5058733	3,06
A1211-N023		10	●	DH4	5058305	3,62
A1211-3.95		10	●	DH4	5058734	3,62
A1211-5/32IN		10	●	DH4	5058792	2,78
A1211-N022		10	●	DH4	5058304	3,65
A1211-4		10	●	DH4	5058746	2,45
A1211-N021		10	●	DH4	5058303	3,70
A1211-4.05		10	●	DH4	5058747	3,70
A1211-N020		10	●	DH4	5058302	3,70
A1211-4.1		10	●	DH4	5058748	3,27
A1211-4.15		10	●	DH4	5058749	3,80
A1211-4.2		10	●	DH4	5058750	2,88
A1211-N019		10	●	DH4	5058300	3,99
A1211-4.25		10	●	DH4	5058751	3,99
A1211-4.3		10	●	DH4	5058752	3,39
A1211-N018		10	●	DH4	5058299	3,39

Bezeichnung / Designation	Sorte / Grade	VE / US		Disc. Gr.	Article No.	EURO Stück / piece
A1211-4.35		10	●	DH4	5058753	4,22
A1211-11/64IN		10	●	DH4	5058596	3,80
A1211-N017		10	●	DH4	5058298	4,47
A1211-4.4		10	●	DH4	5058754	3,39
A1211-4.45		10	●	DH4	5058755	4,47
A1211-N016		10	●	DH4	5058297	3,01
A1211-4.5		10	●	DH4	5058756	3,01
A1211-4.55		10	●	DH4	5058757	4,69
A1211-N015		10	●	DH4	5058296	4,69
A1211-4.6		10	●	DH4	5058758	3,49
A1211-N014		10	●	DH4	5058295	4,88
A1211-4.65		10	●	DH4	5058759	4,88
A1211-N013		10	●	DH4	5058294	3,57
A1211-4.7		10	●	DH4	5058760	3,57
A1211-4.75		10	●	DH4	5058761	4,99
A1211-3/16IN		10	●	DH4	5058735	3,27
A1211-4.8		10	●	DH4	5058762	3,57
A1211-N012		10	●	DH4	5058293	3,57
A1211-4.85		10	●	DH4	5058763	5,14
A1211-N011		10	●	DH4	5058292	5,14
A1211-4.9		10	●	DH4	5058764	3,65
A1211-N010		10	●	DH4	5058291	5,16
A1211-4.95		10	●	DH4	5058765	5,58
A1211-N09		10	●	DH4	5058378	5,50
A1211-5		10	●	DH4	5058771	2,93
A1211-5.05		10	●	DH4	5058772	5,88
A1211-N08		10	●	DH4	5058367	5,88
A1211-5.1		10	●	DH4	5058773	3,84
A1211-N07		10	●	DH4	5058356	5,83
A1211-5.15		10	●	DH4	5058774	6,03
A1211-13/64IN		10	●	DH4	5058623	4,14
A1211-N06		10	●	DH4	5058345	5,88
A1211-5.2		10	●	DH4	5058775	3,96
A1211-N05		10	●	DH4	5058334	6,39
A1211-5.25		10	●	DH4	5058776	6,39
A1211-5.3		10	●	DH4	5058777	4,08
A1211-N04		10	●	DH4	5058323	6,96
A1211-5.4		10	●	DH4	5058779	4,22
A1211-N03		10	●	DH4	5058312	7,04
A1211-5.5		10	●	DH4	5058781	3,96
A1211-5.55		10	●	DH4	5058782	7,20
A1211-7/32IN		10	●	DH4	5058837	4,57
A1211-5.6		10	●	DH4	5058783	4,37
A1211-N02		10	●	DH4	5058301	7,37
A1211-5.7		10	●	DH4	5058785	4,47
A1211-5.75		10	●	DH4	5058786	7,37
A1211-N01		10	●	DH4	5058290	7,37
A1211-5.8		10	●	DH4	5058787	4,57
A1211-5.9		10	●	DH4	5058789	4,69
A1211-LET.A		10	●	DH4	5058264	7,83
A1211-5.95		10	●	DH4	5058790	5,01
A1211-15/64IN		10	●	DH4	5058650	5,01
A1211-6		10	●	DH4	5058796	4,11
A1211-LET.B		10	●	DH4	5058265	8,13
A1211-6.05		10	●	DH4	5058797	8,13
A1211-6.1		10	●	DH4	5058798	4,91
A1211-LET.C		10	●	DH4	5058266	8,13
A1211-6.15		10	●	DH4	5058799	8,13
A1211-6.2		10	●	DH4	5058800	4,91
A1211-LET.D		10	●	DH4	5058267	8,13
A1211-6.25		10	●	DH4	5058801	8,13
A1211-6.3		10	●	DH4	5058802	4,99
A1211-1/4IN		10	●	DH4	5058565	5,37
A1211-6.4		10	●	DH4	5058804	5,32
A1211-6.45		10	●	DH4	5058805	9,15
A1211-6.5		10	●	DH4	5058806	4,99
A1211-LET.F		10	●	DH4	5058269	9,63
A1211-6.55		10	●	DH4	5058807	9,63
A1211-6.6		10	●	DH4	5058808	5,50
A1211-LET.G		10	●	DH4	5058270	9,63

Bezeichnung / Designation	Sorte / Grade	VE / US		Disc. Gr.	Article No.	EURO Stück / piece
A1211-6.65		10	●	DH4	5058809	9,80
A1211-6.7		10	●	DH4	5058810	5,88
A1211-17/64IN		10	●	DH4	5058668	6,88
A1211-6.75		10	●	DH4	5058811	6,88
A1211-LET.H		10	●	DH4	5058271	10,62
A1211-6.8		10	●	DH4	5058812	6,39
A1211-6.9		10	●	DH4	5058814	6,60
A1211-LET.I		10	●	DH4	5058272	11,11
A1211-7		10	●	DH4	5058816	6,03
A1211-LET.J		5	●	DH4	5058273	12,03
A1211-7.05		5	●	DH4	5058817	11,11
A1211-7.1		5	●	DH4	5058818	6,73
A1211-LET.K		5	●	DH4	5058274	7,13
A1211-9/32IN		5	●	DH4	5058881	7,04
A1211-7.2		5	●	DH4	5058820	7,04
A1211-7.25		5	●	DH4	5058821	11,30
A1211-7.3		5	●	DH4	5058822	7,04
A1211-LET.L		5	●	DH4	5058275	12,03
A1211-7.4		5	●	DH4	5058824	7,25
A1211-LET.M		5	●	DH4	5058276	12,28
A1211-7.5		5	●	DH4	5058826	6,60
A1211-19/64IN		5	●	DH4	5058678	7,83
A1211-7.6		5	●	DH4	5058828	7,71
A1211-LET.N		5	●	DH4	5058277	13,10
A1211-7.7		5	●	DH4	5058830	7,71
A1211-7.75		5	●	DH4	5058831	12,62
A1211-7.8		5	●	DH4	5058832	7,75
A1211-7.9		5	●	DH4	5058834	7,83
A1211-5/16IN		5	●	DH4	5058791	7,95
A1211-8		5	●	DH4	5058840	6,60
A1211-LET.O		5	●	DH4	5058278	13,97
A1211-8.05		5	●	DH4	5058841	14,31
A1211-8.1		5	●	DH4	5058842	8,13
A1211-8.2		5	●	DH4	5058844	8,30
A1211-LET.P		5	●	DH4	5058279	8,30
A1211-8.25		5	●	DH4	5058845	11,00
A1211-8.3		5	●	DH4	5058846	9,00
A1211-21/64IN		5	●	DH4	5058702	9,33
A1211-8.4		5	●	DH4	5058848	9,00
A1211-LET.Q		5	●	DH4	5058280	15,90
A1211-8.5		5	●	DH4	5058850	8,50
A1211-8.6		5	●	DH4	5058852	9,88
A1211-LET.R		5	●	DH4	5058281	18,40
A1211-8.7		5	●	DH4	5058854	9,88
A1211-11/32IN		5	●	DH4	5058595	9,98
A1211-8.75		5	●	DH4	5058855	18,32
A1211-8.8		5	●	DH4	5058856	10,12
A1211-8.9		5	●	DH4	5058858	10,62
A1211-9		5	●	DH4	5058860	9,33
A1211-LET.T		5	●	DH4	5058283	19,69
A1211-9.1		5	●	DH4	5058862	10,62
A1211-23/64IN		5	●	DH4	5058706	10,62
A1211-9.2		5	●	DH4	5058864	10,62
A1211-9.25		5	●	DH4	5058865	13,97
A1211-9.3		5	●	DH4	5058866	10,64
A1211-LET.U		5	●	DH4	5058284	20,96
A1211-9.4		5	●	DH4	5058868	10,64
A1211-9.5		5	●	DH4	5058870	10,64
A1211-3/8IN		5	●	DH4	5058739	11,72
A1211-9.6		5	●	DH4	5058872	11,72
A1211-9.7		5	●	DH4	5058874	12,03
A1211-9.75		5	●	DH4	5058875	15,67
A1211-9.8		5	●	DH4	5058876	13,10
A1211-LET.W		5	●	DH4	5058286	13,10
A1211-9.9		5	●	DH4	5058878	13,10
A1211-25/64IN		5	●	DH4	5058710	13,10
A1211-10		5	●	DH4	5058569	11,46
A1211-LET.X		1	●	DH4	5058287	27,30
A1211-10.1		1	●	DH4	5058570	14,50
A1211-10.2		1	●	DH4	5058571	14,50

Bezeichnung / Designation	Sorte / Grade	VE / US		Disc. Gr.	Article No.	EURO Stück / piece
A1211-10.25		1	●	DH4	5058572	19,28
A1211-LET.Y		1	●	DH4	5058288	28,20
A1211-10.3		1	●	DH4	5058573	16,24
A1211-13/32IN		1	●	DH4	5058622	16,24
A1211-10.4		1	●	DH4	5058574	17,61
A1211-LET.Z		1	●	DH4	5058289	27,50
A1211-10.5		1	●	DH4	5058575	14,55
A1211-10.6		1	●	DH4	5058576	18,40
A1211-10.7		1	●	DH4	5058577	20,51
A1211-27/64IN		1	●	DH4	5058712	20,96
A1211-10.75		1	●	DH4	5058578	23,40
A1211-10.8		1	●	DH4	5058579	20,90
A1211-10.9		1	●	DH4	5058580	21,44
A1211-11		1	●	DH4	5058581	17,09
A1211-11.1		1	●	DH4	5058582	21,77
A1211-7/16IN		1	●	DH4	5058836	18,73
A1211-11.2		1	●	DH4	5058583	22,12
A1211-11.25		1	●	DH4	5058584	24,95
A1211-11.3		1	●	DH4	5058585	22,40
A1211-11.4		1	●	DH4	5058586	22,79
A1211-11.5		1	●	DH4	5058587	18,40
A1211-29/64IN		1	●	DH4	5058714	22,12
A1211-11.6		1	●	DH4	5058589	23,15
A1211-11.7		1	●	DH4	5058590	23,40
A1211-11.75		1	●	DH4	5058591	25,90
A1211-11.8		1	●	DH4	5058592	24,18
A1211-11.9		1	●	DH4	5058593	25,90
A1211-15/32IN		1	●	DH4	5058649	21,23
A1211-12		1	●	DH4	5058597	20,34
A1211-12.1		1	●	DH4	5058598	27,50
A1211-12.2		1	●	DH4	5058599	27,50
A1211-12.25		1	●	DH4	5058600	30,40
A1211-12.3		1	●	DH4	5058601	28,60
A1211-31/64IN		1	●	DH4	5058741	28,60
A1211-12.4		1	●	DH4	5058602	29,90
A1211-12.5		1	●	DH4	5058603	23,15
A1211-12.6		1	●	DH4	5058604	31,80
A1211-1/2IN		1	●	DH4	5058563	25,40
A1211-12.75		1	●	DH4	5058606	35,50
A1211-12.8		1	●	DH4	5058607	33,70
A1211-12.9		1	●	DH4	5058608	34,30
A1211-13		1	●	DH4	5058609	25,20
A1211-33/64IN		1	●	DH4	5058742	36,00
A1211-13.1		1	●	DH4	5058610	36,00
A1211-13.2		1	●	DH4	5058611	37,40
A1211-13.25		1	●	DH4	5058612	41,90
A1211-13.3		1	●	DH4	5058613	38,30
A1211-13.4		1	●	DH4	5058614	39,10
A1211-17/32IN		1	●	DH4	5058667	29,90
A1211-13.5		1	●	DH4	5058615	27,80
A1211-13.6		1	●	DH4	5058616	41,40
A1211-13.7		1	●	DH4	5058617	43,80
A1211-13.75		1	●	DH4	5058618	48,50
A1211-13.8		1	●	DH4	5058619	45,40
A1211-35/64IN		1	●	DH4	5058743	40,90
A1211-13.9		1	●	DH4	5058620	46,40
A1211-14		1	●	DH4	5058624	30,00
A1211-14.1		1	●	DH4	5058625	47,10
A1211-14.2		1	●	DH4	5058626	48,50
A1211-14.25		1	●	DH4	5058627	53,20
A1211-9/16IN		1	●	DH4	5058880	34,30
A1211-14.3		1	●	DH4	5058628	50,40
A1211-14.5		1	●	DH4	5058630	32,30
A1211-37/64IN		1	●	DH4	5058744	50,40
A1211-14.75		1	●	DH4	5058633	59,80
A1211-15		1	●	DH4	5058636	34,60
A1211-19/32IN		1	●	DH4	5058677	45,20
A1211-15.2		1	●	DH4	5058638	63,50
A1211-15.25		1	●	DH4	5058639	71,10
A1211-39/64IN		1	●	DH4	5058745	54,60

Bezeichnung / Designation	Sorte / Grade	VE / US		Disc. Gr.	Article No.	EURO Stück / piece
A1211-15.5		1	●	DH4	5058642	36,80
A1211-15.75		1	●	DH4	5058645	73,90
A1211-5/8IN		1	●	DH4	5058794	46,40
A1211-16		1	●	DH4	5058651	39,10
A1211-41/64IN		1	●	DH4	5058766	56,00
A1211-16.5		1	●	DH4	5058657	41,30
A1211-21/32IN		1	●	DH4	5058701	53,20
A1211-17		1	●	DH4	5058663	43,60
A1211-43/64IN		1	●	DH4	5058767	60,30
A1211-11/16IN		1	●	DH4	5058594	60,30
A1211-17.5		1	●	DH4	5058665	45,80
A1211-18		1	●	DH4	5058669	48,10
A1211-18.5		1	●	DH4	5058671	50,40
A1211-19		1	●	DH4	5058673	52,60
A1211-19.5		1	●	DH4	5058675	54,90
A1211-20		1	●	DH4	5058699	57,10
A1211-21		1	●	DH4	5058700	76,40
A1211-22		1	●	DH4	5058703	83,30
A1211TIN-0.5	TIN	5	●	DH4	5058883	12,78
A1211TIN-0.6	TIN	5	●	DH4	5058884	12,50
A1211TIN-0.7	TIN	5	●	DH4	5058885	11,29
A1211TIN-0.8	TIN	5	●	DH4	5058886	10,77
A1211TIN-0.9	TIN	5	●	DH4	5058887	10,37
A1211TIN-1	TIN	5	●	DH4	5058888	9,78
A1211TIN-1.1	TIN	5	●	DH4	5058889	9,47
A1211TIN-1.2	TIN	5	●	DH4	5058890	9,78
A1211TIN-1.3	TIN	5	●	DH4	5058891	9,28
A1211TIN-1.4	TIN	5	●	DH4	5058892	8,64
A1211TIN-1.5	TIN	5	●	DH4	5058893	7,88
A1211TIN-1.6	TIN	5	●	DH4	5058894	7,68
A1211TIN-1.7	TIN	5	●	DH4	5058895	7,78
A1211TIN-1.8	TIN	5	●	DH4	5058896	6,74
A1211TIN-1.9	TIN	5	●	DH4	5058897	7,04
A1211TIN-2	TIN	5	●	DH4	5058911	5,92
A1211TIN-2.1	TIN	1	●	DH4	5058912	6,92
A1211TIN-2.2	TIN	1	●	DH4	5058913	7,16
A1211TIN-2.3	TIN	1	●	DH4	5058914	7,16
A1211TIN-2.4	TIN	1	●	DH4	5058915	7,25
A1211TIN-2.5	TIN	1	●	DH4	5058916	6,30
A1211TIN-2.6	TIN	1	●	DH4	5058917	7,68
A1211TIN-2.7	TIN	1	●	DH4	5058918	7,68
A1211TIN-2.8	TIN	1	●	DH4	5058919	7,78
A1211TIN-2.9	TIN	1	●	DH4	5058920	7,78
A1211TIN-3	TIN	1	●	DH4	5058921	6,44
A1211TIN-3.1	TIN	1	●	DH4	5058922	7,88
A1211TIN-3.2	TIN	1	●	DH4	5058923	6,92
A1211TIN-3.3	TIN	1	●	DH4	5058924	6,92
A1211TIN-3.4	TIN	1	●	DH4	5058925	7,83
A1211TIN-3.5	TIN	1	●	DH4	5058926	6,97
A1211TIN-3.6	TIN	1	●	DH4	5058927	8,50
A1211TIN-3.7	TIN	1	●	DH4	5058928	8,89
A1211TIN-3.8	TIN	1	●	DH4	5058929	9,32
A1211TIN-3.9	TIN	1	●	DH4	5058930	9,60
A1211TIN-4	TIN	1	●	DH4	5058931	7,34
A1211TIN-4.1	TIN	1	●	DH4	5058932	10,13
A1211TIN-4.2	TIN	1	●	DH4	5058933	8,39
A1211TIN-4.3	TIN	1	●	DH4	5058934	10,24
A1211TIN-4.4	TIN	1	●	DH4	5058935	10,24
A1211TIN-4.5	TIN	1	●	DH4	5058936	8,89
A1211TIN-4.6	TIN	1	●	DH4	5058937	10,24
A1211TIN-4.7	TIN	1	●	DH4	5058938	10,48
A1211TIN-4.8	TIN	1	●	DH4	5058939	10,63
A1211TIN-4.9	TIN	1	●	DH4	5058940	11,10
A1211TIN-5	TIN	1	●	DH4	5058941	8,98
A1211TIN-5.1	TIN	1	●	DH4	5058942	11,23
A1211TIN-5.2	TIN	1	●	DH4	5058943	11,29
A1211TIN-5.3	TIN	1	●	DH4	5058944	11,29
A1211TIN-5.4	TIN	1	●	DH4	5058945	11,59
A1211TIN-5.5	TIN	1	●	DH4	5058946	10,98
A1211TIN-5.6	TIN	1	●	DH4	5058947	11,63

Bezeichnung / Designation	Sorte / Grade	VE / US		Disc. Gr.	Article No.	EURO Stück / piece
A1211TIN-5.7	TIN	1	●	DH4	5058948	11,91
A1211TIN-5.8	TIN	1	●	DH4	5058949	12,17
A1211TIN-5.9	TIN	1	●	DH4	5058950	12,50
A1211TIN-6	TIN	1	●	DH4	5058951	10,98
A1211TIN-6.1	TIN	1	●	DH4	5058952	13,36
A1211TIN-6.2	TIN	1	●	DH4	5058953	13,36
A1211TIN-6.3	TIN	1	●	DH4	5058954	13,63
A1211TIN-6.4	TIN	1	●	DH4	5058955	14,57
A1211TIN-6.5	TIN	1	●	DH4	5058956	13,63
A1211TIN-6.6	TIN	1	●	DH4	5058957	14,87
A1211TIN-6.7	TIN	1	●	DH4	5058958	15,96
A1211TIN-6.8	TIN	1	●	DH4	5058959	17,28
A1211TIN-6.9	TIN	1	●	DH4	5058960	18,38
A1211TIN-7	TIN	1	●	DH4	5058961	16,31
A1211TIN-7.1	TIN	1	●	DH4	5058962	18,70
A1211TIN-7.2	TIN	1	●	DH4	5058963	18,95
A1211TIN-7.3	TIN	1	●	DH4	5058964	19,62
A1211TIN-7.4	TIN	1	●	DH4	5058965	19,90
A1211TIN-7.5	TIN	1	●	DH4	5058966	18,10
A1211TIN-7.6	TIN	1	●	DH4	5058967	20,96
A1211TIN-7.7	TIN	1	●	DH4	5058968	20,96
A1211TIN-7.8	TIN	1	●	DH4	5058969	20,96
A1211TIN-7.9	TIN	1	●	DH4	5058970	21,30
A1211TIN-8	TIN	1	●	DH4	5058971	18,10
A1211TIN-8.1	TIN	1	●	DH4	5058972	22,22
A1211TIN-8.2	TIN	1	●	DH4	5058973	22,88
A1211TIN-8.3	TIN	1	●	DH4	5058974	23,96
A1211TIN-8.4	TIN	1	●	DH4	5058975	24,62
A1211TIN-8.5	TIN	1	●	DH4	5058976	23,73
A1211TIN-8.6	TIN	1	●	DH4	5058977	26,90
A1211TIN-8.7	TIN	1	●	DH4	5058978	27,30
A1211TIN-8.8	TIN	1	●	DH4	5058979	28,20
A1211TIN-8.9	TIN	1	●	DH4	5058980	29,20
A1211TIN-9	TIN	1	●	DH4	5058981	25,50
A1211TIN-9.1	TIN	1	●	DH4	5058982	29,40
A1211TIN-9.2	TIN	1	●	DH4	5058983	29,80
A1211TIN-9.3	TIN	1	●	DH4	5058984	30,20
A1211TIN-9.4	TIN	1	●	DH4	5058985	30,90
A1211TIN-9.5	TIN	1	●	DH4	5058986	29,20
A1211TIN-9.6	TIN	1	●	DH4	5058987	32,00
A1211TIN-9.7	TIN	1	●	DH4	5058988	32,70
A1211TIN-9.8	TIN	1	●	DH4	5058989	35,00
A1211TIN-9.9	TIN	1	●	DH4	5058990	35,60
A1211TIN-10	TIN	1	●	DH4	5058898	31,00
A1211TIN-10.2	TIN	1	●	DH4	5058899	39,30
A1211TIN-10.5	TIN	1	●	DH4	5058900	40,30
A1211TIN-11	TIN	1	●	DH4	5058901	46,60
A1211TIN-11.5	TIN	1	●	DH4	5058902	50,60
A1211TIN-12	TIN	1	●	DH4	5058903	55,60
A1211TIN-12.5	TIN	1	●	DH4	5058904	63,30
A1211TIN-13	TIN	1	●	DH4	5058905	70,60
A1211TIN-13.5	TIN	1	●	DH4	5058906	77,90
A1211TIN-14	TIN	1	●	DH4	5058907	84,20
A1211TIN-14.5	TIN	1	●	DH4	5058908	90,50
A1211TIN-15	TIN	1	●	DH4	5058909	96,90
A1211TIN-16	TIN	1	●	DH4	5058910	110,00
A1222-1		10	●	DH8	5059409	4,90
A1222-NO60		10	●	DH8	5059405	7,39
A1222-NO59		10	●	DH8	5059403	7,39
A1222-NO58		10	●	DH8	5059402	7,39
A1222-NO57		10	●	DH8	5059401	7,07
A1222-1.1		10	●	DH8	5059410	5,78
A1222-NO56		10	●	DH8	5059400	7,07
A1222-3/64IN		10	●	DH8	5059479	5,78
A1222-1.2		10	●	DH8	5059411	5,78
A1222-1.25		10	●	DH8	5153966	5,78
A1222-1.3		10	●	DH8	5059412	5,78
A1222-NO55		10	●	DH8	5059399	6,64
A1222-NO54		10	●	DH8	5059398	5,78
A1222-1.4		10	●	DH8	5059413	5,78

Bezeichnung / Designation	Sorte / Grade	VE / US		Disc. Gr.	Article No.	EURO Stück / piece
A1222-1.5		10	●	DH8	5059414	5,74
A1222-NO53		10	●	DH8	5059397	6,64
A1222-1/16IN		10	●	DH8	5059419	5,34
A1222-1.6		10	●	DH8	5059415	5,34
A1222-NO52		10	●	DH8	5059396	6,28
A1222-1.7		10	●	DH8	5059416	5,34
A1222-NO51		10	●	DH8	5059395	5,34
A1222-NO50		10	●	DH8	5059394	6,36
A1222-1.8		10	●	DH8	5059417	5,34
A1222-NO49		10	●	DH8	5059392	5,91
A1222-1.9		10	●	DH8	5059418	5,34
A1222-NO48		10	●	DH8	5059391	5,74
A1222-5/64IN		10	●	DH8	5059504	5,34
A1222-NO47		10	●	DH8	5059390	5,74
A1222-2		10	●	DH8	5059452	4,83
A1222-NO46		10	●	DH8	5059389	5,74
A1222-NO45		10	●	DH8	5059388	5,74
A1222-2.1		10	●	DH8	5059453	5,47
A1222-NO44		10	●	DH8	5059387	6,08
A1222-2.2		10	●	DH8	5059454	5,47
A1222-NO43		10	●	DH8	5059386	6,08
A1222-2.3		10	●	DH8	5059455	5,47
A1222-NO42		10	●	DH8	5059385	5,61
A1222-3/32IN		10	●	DH8	5059478	5,61
A1222-2.4		10	●	DH8	5059456	5,61
A1222-NO41		10	●	DH8	5059384	6,18
A1222-NO40		10	●	DH8	5059383	6,28
A1222-2.5		10	●	DH8	5059457	4,83
A1222-NO39		10	●	DH8	5059381	6,28
A1222-NO38		10	●	DH8	5059380	6,40
A1222-2.6		10	●	DH8	5059458	5,61
A1222-NO37		10	●	DH8	5059379	6,40
A1222-2.7		10	●	DH8	5059459	5,97
A1222-NO36		10	●	DH8	5059378	6,40
A1222-7/64IN		10	●	DH8	5059527	6,08
A1222-NO35		10	●	DH8	5059377	6,64
A1222-2.8		10	●	DH8	5059460	5,97
A1222-NO34		10	●	DH8	5059376	6,64
A1222-NO33		10	●	DH8	5059375	6,64
A1222-2.9		10	●	DH8	5059461	6,05
A1222-NO32		10	●	DH8	5059374	6,64
A1222-3		10	●	DH8	5059467	5,04
A1222-NO31		10	●	DH8	5059373	6,82
A1222-3.1		10	●	DH8	5059468	6,18
A1222-1/8IN		10	●	DH8	5059422	5,39
A1222-3.2		10	●	DH8	5059469	5,39
A1222-NO30		10	●	DH8	5059372	7,25
A1222-3.3		10	●	DH8	5059470	5,56
A1222-3.4		10	●	DH8	5059471	6,71
A1222-NO29		10	●	DH8	5059370	7,59
A1222-3.5		10	●	DH8	5059472	5,61
A1222-NO28		10	●	DH8	5059369	6,97
A1222-9/64IN		10	●	DH8	5059549	6,97
A1222-3.6		10	●	DH8	5059473	6,82
A1222-NO27		10	●	DH8	5059368	7,79
A1222-3.7		10	●	DH8	5059474	7,01
A1222-NO26		10	●	DH8	5059367	8,05
A1222-NO25		10	●	DH8	5059366	7,22
A1222-3.8		10	●	DH8	5059475	7,22
A1222-NO24		10	●	DH8	5059365	8,60
A1222-3.9		10	●	DH8	5059476	7,49
A1222-NO23		10	●	DH8	5059364	8,60
A1222-5/32IN		10	●	DH8	5059503	7,66
A1222-NO22		10	●	DH8	5059363	8,60
A1222-4		10	●	DH8	5059482	6,05
A1222-NO21		10	●	DH8	5059362	8,60
A1222-NO20		10	●	DH8	5059361	8,60
A1222-4.1		10	●	DH8	5059483	7,49
A1222-4.2		10	●	DH8	5059484	6,82
A1222-NO19		10	●	DH8	5059359	8,60

Bezeichnung / Designation	Sorte / Grade	VE / US		Disc. Gr.	Article No.	EURO Stück / piece
A1222-4.3		10	●	DH8	5059485	7,79
A1222-NO18		10	●	DH8	5059358	8,05
A1222-11/64IN		10	●	DH8	5059432	8,30
A1222-NO17		10	●	DH8	5059357	9,28
A1222-4.4		10	●	DH8	5059486	7,79
A1222-NO16		10	●	DH8	5059356	7,01
A1222-4.5		10	●	DH8	5059487	7,01
A1222-NO15		10	●	DH8	5059355	9,85
A1222-4.6		10	●	DH8	5059488	8,14
A1222-NO14		10	●	DH8	5059354	9,85
A1222-NO13		10	●	DH8	5059353	8,14
A1222-4.7		10	●	DH8	5059489	8,14
A1222-3/16IN		10	●	DH8	5059477	7,66
A1222-4.8		10	●	DH8	5059490	8,14
A1222-NO12		10	●	DH8	5059352	8,14
A1222-NO11		10	●	DH8	5059351	9,28
A1222-4.9		10	●	DH8	5059491	8,35
A1222-NO10		10	●	DH8	5059350	9,85
A1222-NO9		10	●	DH8	5059408	9,85
A1222-5		10	●	DH8	5059492	7,49
A1222-NO8		10	●	DH8	5059407	9,85
A1222-5.1		10	●	DH8	5059493	8,35
A1222-NO7		10	●	DH8	5059406	9,85
A1222-13/64IN		10	●	DH8	5059440	8,79
A1222-NO6		10	●	DH8	5059404	10,03
A1222-5.2		10	●	DH8	5059494	8,75
A1222-NO5		10	●	DH8	5059393	10,03
A1222-5.3		10	●	DH8	5059495	8,75
A1222-NO4		10	●	DH8	5059382	11,54
A1222-5.4		10	●	DH8	5059496	9,32
A1222-NO3		10	●	DH8	5059371	13,61
A1222-5.5		10	●	DH8	5059497	8,79
A1222-7/32IN		10	●	DH8	5059526	9,38
A1222-5.6		10	●	DH8	5059498	9,65
A1222-NO2		10	●	DH8	5059360	13,61
A1222-5.7		10	●	DH8	5059499	9,65
A1222-NO1		10	●	DH8	5059349	14,23
A1222-5.8		10	●	DH8	5059500	9,76
A1222-5.9		10	●	DH8	5059501	10,03
A1222-LET.A		10	●	DH8	5059323	12,17
A1222-15/64IN		10	●	DH8	5059448	10,29
A1222-6		10	●	DH8	5059505	9,76
A1222-LET.B		10	●	DH8	5059324	14,84
A1222-6.1		10	●	DH8	5059506	10,29
A1222-LET.C		10	●	DH8	5059325	14,84
A1222-6.2		10	●	DH8	5059507	11,03
A1222-LET.D		10	●	DH8	5059326	14,84
A1222-6.3		10	●	DH8	5059508	11,91
A1222-1/4IN		10	●	DH8	5059421	11,47
A1222-6.4		10	●	DH8	5059509	12,17
A1222-6.5		10	●	DH8	5059510	10,60
A1222-LET.F		10	●	DH8	5059328	15,08
A1222-6.6		10	●	DH8	5059511	12,71
A1222-LET.G		10	●	DH8	5059329	15,08
A1222-6.7		10	●	DH8	5059512	12,71
A1222-17/64IN		10	●	DH8	5059450	13,07
A1222-LET.H		10	●	DH8	5059330	14,67
A1222-6.8		10	●	DH8	5059513	13,07
A1222-6.9		10	●	DH8	5059514	13,61
A1222-LET.I		10	●	DH8	5059331	16,13
A1222-7		10	●	DH8	5059515	11,08
A1222-LET.J		5	●	DH8	5059332	20,51
A1222-7.1		5	●	DH8	5059516	17,97
A1222-LET.K		5	●	DH8	5059333	17,97
A1222-9/32IN		5	●	DH8	5059548	17,56
A1222-7.2		5	●	DH8	5059517	17,97
A1222-7.3		5	●	DH8	5059518	17,97
A1222-LET.L		5	●	DH8	5059334	23,40
A1222-7.4		5	●	DH8	5059519	17,97
A1222-LET.M		5	●	DH8	5059335	22,92

Bezeichnung / Designation	Sorte / Grade	VE / US		Disc. Gr.	Article No.	EURO Stück / piece
A1222-7.5		5	●	DH8	5059520	13,61
A1222-19/64IN		5	●	DH8	5059451	17,97
A1222-7.6		5	●	DH8	5059521	19,42
A1222-LET.N		5	●	DH8	5059336	25,90
A1222-7.7		5	●	DH8	5059522	19,42
A1222-7.8		5	●	DH8	5059523	19,42
A1222-7.9		5	●	DH8	5059524	19,42
A1222-5/16IN		5	●	DH8	5059502	19,04
A1222-8		5	●	DH8	5059528	14,50
A1222-LET.O		5	●	DH8	5059337	27,10
A1222-8.1		5	●	DH8	5059529	21,06
A1222-8.2		5	●	DH8	5059530	22,46
A1222-LET.P		5	●	DH8	5059338	22,46
A1222-8.3		5	●	DH8	5059531	24,92
A1222-21/64IN		5	●	DH8	5059462	26,10
A1222-8.4		5	●	DH8	5059532	26,10
A1222-LET.Q		5	●	DH8	5059339	27,10
A1222-8.5		5	●	DH8	5059533	16,26
A1222-8.6		5	●	DH8	5059534	26,10
A1222-LET.R		5	●	DH8	5059340	31,00
A1222-8.7		5	●	DH8	5059535	26,80
A1222-11/32IN		5	●	DH8	5059431	24,92
A1222-8.8		5	●	DH8	5059536	26,80
A1222-LET.S		5	●	DH8	5059341	31,00
A1222-8.9		5	●	DH8	5059537	26,80
A1222-9		5	●	DH8	5059538	17,11
A1222-LET.T		5	●	DH8	5059342	31,00
A1222-9.1		5	●	DH8	5059539	28,80
A1222-23/64IN		5	●	DH8	5059463	28,80
A1222-9.2		5	●	DH8	5059540	29,50
A1222-9.3		5	●	DH8	5059541	30,50
A1222-LET.U		5	●	DH8	5059343	42,50
A1222-9.4		5	●	DH8	5059542	30,50
A1222-9.5		5	●	DH8	5059543	18,74
A1222-3/8IN		5	●	DH8	5059480	22,92
A1222-LET.V		5	●	DH8	5059344	41,30
A1222-9.6		5	●	DH8	5059544	32,00
A1222-9.7		5	●	DH8	5059545	33,20
A1222-9.8		5	●	DH8	5059546	34,90
A1222-LET.W		5	●	DH8	5059345	34,90
A1222-9.9		5	●	DH8	5059547	34,90
A1222-25/64IN		5	●	DH8	5059464	28,80
A1222-10		5	●	DH8	5059423	20,71
A1222-LET.X		1	●	DH8	5059346	43,50
A1222-10.2		1	●	DH8	5059424	35,60
A1222-LET.Y		1	●	DH8	5059347	43,50
A1222-13/32IN		1	●	DH8	5059439	31,00
A1222-LET.Z		1	●	DH8	5059348	43,50
A1222-10.5		1	●	DH8	5059425	31,00
A1222-27/64IN		1	●	DH8	5059465	40,80
A1222-10.8		1	●	DH8	5059426	47,10
A1222-11		1	●	DH8	5059427	32,70
A1222-7/16IN		1	●	DH8	5059525	33,70
A1222-11.2		1	●	DH8	5059428	57,60
A1222-11.5		1	●	DH8	5059429	36,40
A1222-29/64IN		1	●	DH8	5059466	41,50
A1222-11.8		1	●	DH8	5059430	65,00
A1222-15/32IN		1	●	DH8	5059447	40,80
A1222-12		1	●	DH8	5059433	41,30
A1222-31/64IN		1	●	DH8	5059481	50,30
A1222-12.5		1	●	DH8	5059434	49,80
A1222-1/2IN		1	●	DH8	5059420	47,60
A1222-13		1	●	DH8	5059435	52,20
A1222-33/64IN		1	●	DH8	5153961	67,40
A1222-13.1		1	●	DH8	5059436	67,40
A1222-13.3		1	●	DH8	5059437	68,30
A1222-17/32IN		1	●	DH8	5153959	57,60
A1222-13.5		1	●	DH8	5059438	57,60
A1222-35/64IN		1	●	DH8	5153962	62,30
A1222-14		1	●	DH8	5059441	62,30

Bezeichnung / Designation	Sorte / Grade	VE / US		Disc. Gr.	Article No.	EURO Stück / piece
A1222-9/16IN		1	●	DH8	5153967	67,00
A1222-14.5		1	●	DH8	5059442	67,00
A1222-37/64IN		1	●	DH8	5153963	71,70
A1222-15		1	●	DH8	5059443	71,70
A1222-19/32IN		1	●	DH8	5153960	78,10
A1222-15.1		1	●	DH8	5059444	78,10
A1222-15.3		1	●	DH8	5059445	78,10
A1222-39/64IN		1	●	DH8	5153964	76,40
A1222-15.5		1	●	DH8	5059446	76,40
A1222-5/8IN		1	●	DH8	5153965	85,00
A1222-16		1	●	DH8	5059449	81,10
A1244-0.3		10	●	DH4	5060279	14,77
A1244-NO80		10	●	DH4	5155160	14,57
A1244-0.35		10	●	DH4	5060280	14,57
A1244-1/64IN		10	●	DH4	5060317	11,20
A1244-0.4		10	●	DH4	5060281	11,20
A1244-NO78		10	●	DH4	5060276	13,44
A1244-0.45		10	●	DH4	5060282	11,74
A1244-NO77		10	●	DH4	5060275	13,07
A1244-0.5		10	●	DH4	5060283	9,81
A1244-NO76		10	●	DH4	5060274	12,40
A1244-NO75		10	●	DH4	5060273	12,40
A1244-0.55		10	●	DH4	5060284	11,20
A1244-NO74		10	●	DH4	5060272	12,30
A1244-0.6		10	●	DH4	5060285	9,81
A1244-NO73		10	●	DH4	5060271	12,13
A1244-NO72		10	●	DH4	5060270	11,98
A1244-0.65		10	●	DH4	5060286	10,94
A1244-NO71		10	●	DH4	5060269	10,11
A1244-0.7		10	●	DH4	5060287	8,82
A1244-NO70		10	●	DH4	5060268	9,17
A1244-NO69		10	●	DH4	5060266	9,17
A1244-0.75		10	●	DH4	5060288	10,50
A1244-NO68		10	●	DH4	5060265	9,17
A1244-1/32IN		10	●	DH4	5060315	8,55
A1244-0.8		10	●	DH4	5060289	8,38
A1244-NO67		10	●	DH4	5060264	8,38
A1244-NO66		10	●	DH4	5060263	8,38
A1244-0.85		10	●	DH4	5060290	10,41
A1244-NO65		10	●	DH4	5060262	8,38
A1244-0.9		10	●	DH4	5060291	8,18
A1244-NO64		10	●	DH4	5060261	9,25
A1244-NO63		10	●	DH4	5060260	9,25
A1244-0.95		10	●	DH4	5060292	10,31
A1244-NO62		10	●	DH4	5060259	9,25
A1244-NO61		10	●	DH4	5060258	9,25
A1244-1		10	●	DH4	5060293	7,77
A1244-NO60		10	●	DH4	5060257	7,61
A1244-NO59		10	●	DH4	5060255	7,61
A1244-1.05		10	●	DH4	5060294	10,16
A1244-NO58		10	●	DH4	5060254	7,61
A1244-NO57		10	●	DH4	5060253	7,61
A1244-1.1		10	●	DH4	5060295	7,83
A1244-1.15		10	●	DH4	5060296	10,05
A1244-NO56		10	●	DH4	5060252	8,18
A1244-3/64IN		10	●	DH4	5060378	8,63
A1244-1.2		10	●	DH4	5060297	8,50
A1244-1.25		10	●	DH4	5060298	9,89
A1244-1.3		10	●	DH4	5060299	8,18
A1244-NO55		10	●	DH4	5060251	9,46
A1244-1.35		10	●	DH4	5060300	9,72
A1244-NO54		10	●	DH4	5060250	7,96
A1244-1.4		10	●	DH4	5060301	7,77
A1244-1.45		10	●	DH4	5060302	9,59
A1244-1.5		10	●	DH4	5060303	7,19
A1244-NO53		10	●	DH4	5060249	9,46
A1244-1.55		10	●	DH4	5060304	9,53
A1244-1/16IN		10	●	DH4	5060313	7,96
A1244-1.6		10	●	DH4	5060305	7,77
A1244-NO52		10	●	DH4	5060248	9,46

Bezeichnung / Designation	Sorte / Grade	VE / US		Disc. Gr.	Article No.	EURO Stück / piece
A1244-1.65		10	●	DH4	5060306	9,46
A1244-1.7		10	●	DH4	5060307	7,96
A1244-NO51		10	●	DH4	5060247	8,25
A1244-1.75		10	●	DH4	5060308	9,42
A1244-NO50		10	●	DH4	5060246	10,11
A1244-1.8		10	●	DH4	5060309	7,77
A1244-1.85		10	●	DH4	5060310	9,37
A1244-NO49		10	●	DH4	5060244	9,17
A1244-1.9		10	●	DH4	5060311	7,96
A1244-NO48		10	●	DH4	5060243	10,69
A1244-1.95		10	●	DH4	5060312	9,30
A1244-5/64IN		10	●	DH4	5060403	7,96
A1244-NO47		10	●	DH4	5060242	9,53
A1244-2		10	●	DH4	5060340	6,59
A1244-2.05		10	●	DH4	5060341	9,30
A1244-NO46		10	●	DH4	5060241	8,55
A1244-NO45		10	●	DH4	5060240	8,55
A1244-2.1		10	●	DH4	5060342	8,38
A1244-2.15		10	●	DH4	5060343	9,65
A1244-NO44		10	●	DH4	5060239	10,11
A1244-2.2		10	●	DH4	5060344	8,38
A1244-2.25		10	●	DH4	5060345	10,22
A1244-2.3		10	●	DH4	5060346	8,38
A1244-2.35		10	●	DH4	5060347	10,50
A1244-NO42		10	●	DH4	5060237	7,26
A1244-3/32IN		10	●	DH4	5060377	7,55
A1244-2.4		10	●	DH4	5060348	8,43
A1244-NO41		10	●	DH4	5060236	10,94
A1244-2.45		10	●	DH4	5060349	10,76
A1244-NO40		10	●	DH4	5060235	8,63
A1244-2.5		10	●	DH4	5060350	6,85
A1244-NO39		10	●	DH4	5060233	9,17
A1244-2.55		10	●	DH4	5060351	10,94
A1244-NO38		10	●	DH4	5060232	9,17
A1244-2.6		10	●	DH4	5060352	8,55
A1244-NO37		10	●	DH4	5060231	9,17
A1244-2.65		10	●	DH4	5060353	11,35
A1244-2.7		10	●	DH4	5060354	8,88
A1244-2.75		10	●	DH4	5060355	11,85
A1244-7/64IN		10	●	DH4	5060426	7,96
A1244-2.8		10	●	DH4	5060356	8,82
A1244-NO34		10	●	DH4	5060228	8,63
A1244-2.85		10	●	DH4	5060357	11,92
A1244-NO33		10	●	DH4	5060227	8,63
A1244-2.9		10	●	DH4	5060358	8,82
A1244-NO32		10	●	DH4	5060226	8,63
A1244-2.95		10	●	DH4	5060359	12,03
A1244-3		10	●	DH4	5060365	6,85
A1244-NO31		5	●	DH4	5060225	8,63
A1244-3.1		5	●	DH4	5060366	8,88
A1244-1/8IN		5	●	DH4	5060318	7,77
A1244-3.2		5	●	DH4	5060367	7,77
A1244-NO30		5	●	DH4	5060224	8,18
A1244-3.3		5	●	DH4	5060368	7,77
A1244-3.4		5	●	DH4	5060369	9,53
A1244-NO29		5	●	DH4	5060222	8,63
A1244-3.5		5	●	DH4	5060370	7,83
A1244-NO28		5	●	DH4	5060221	9,17
A1244-9/64IN		5	●	DH4	5060448	9,17
A1244-3.6		5	●	DH4	5060371	9,81
A1244-3.65		5	●	DH4	5060372	13,20
A1244-NO27		5	●	DH4	5060220	10,69
A1244-3.7		5	●	DH4	5060373	9,98
A1244-NO26		5	●	DH4	5060219	10,76
A1244-NO25		5	●	DH4	5060218	10,76
A1244-3.8		5	●	DH4	5060374	10,05
A1244-NO24		5	●	DH4	5060217	10,81
A1244-3.9		5	●	DH4	5060375	10,35
A1244-NO23		5	●	DH4	5060216	10,81
A1244-5/32IN		5	●	DH4	5060402	9,98

Bezeichnung / Designation	Sorte / Grade	VE / US		Disc. Gr.	Article No.	EURO Stück / piece
A1244-4		5	●	DH4	5060381	**8,38**
A1244-NO21		5	●	DH4	5060214	**10,81**
A1244-NO20		5	●	DH4	5060213	**10,81**
A1244-4.1		5	●	DH4	5060382	**10,35**
A1244-4.2		5	●	DH4	5060383	**9,89**
A1244-NO19		5	●	DH4	5060211	**10,81**
A1244-4.3		5	●	DH4	5060384	**10,50**
A1244-11/64IN		5	●	DH4	5060326	**11,00**
A1244-4.4		5	●	DH4	5060385	**10,81**
A1244-4.5		5	●	DH4	5060386	**10,35**
A1244-NO15		5	●	DH4	5060207	**11,38**
A1244-4.6		5	●	DH4	5060387	**11,20**
A1244-NO14		5	●	DH4	5060206	**11,61**
A1244-4.7		5	●	DH4	5060388	**11,25**
A1244-3/16IN		5	●	DH4	5060376	**11,20**
A1244-4.8		5	●	DH4	5060389	**11,49**
A1244-NO12		5	●	DH4	5060204	**11,74**
A1244-NO11		5	●	DH4	5060203	**11,74**
A1244-4.9		5	●	DH4	5060390	**11,66**
A1244-NO10		5	●	DH4	5060202	**12,30**
A1244-NO9		5	●	DH4	5060278	**12,30**
A1244-5		5	●	DH4	5060391	**10,16**
A1244-NO8		5	●	DH4	5060277	**12,30**
A1244-5.1		5	●	DH4	5060392	**11,66**
A1244-NO7		5	●	DH4	5060267	**12,30**
A1244-13/64IN		5	●	DH4	5060332	**12,30**
A1244-5.2		5	●	DH4	5060393	**11,92**
A1244-NO5		5	●	DH4	5060245	**12,30**
A1244-5.3		5	●	DH4	5060394	**12,33**
A1244-5.4		5	●	DH4	5060395	**13,20**
A1244-NO3		5	●	DH4	5060223	**13,66**
A1244-5.5		5	●	DH4	5060396	**14,16**
A1244-7/32IN		5	●	DH4	5060425	**13,66**
A1244-5.6		5	●	DH4	5060397	**13,53**
A1244-NO2		5	●	DH4	5060212	**13,93**
A1244-5.7		5	●	DH4	5060398	**13,73**
A1244-5.8		5	●	DH4	5060399	**13,86**
A1244-5.9		5	●	DH4	5060400	**14,16**
A1244-6		5	●	DH4	5060404	**13,31**
A1244-6.1		5	●	DH4	5060405	**15,03**
A1244-6.2		5	●	DH4	5060406	**15,13**
A1244-6.3		5	●	DH4	5060407	**15,48**
A1244-1/4IN		5	●	DH4	5060316	**16,39**
A1244-6.4		5	●	DH4	5060408	**16,39**
A1244-6.5		5	●	DH4	5060409	**15,03**
A1244-6.6		5	●	DH4	5060410	**16,58**
A1244-6.7		5	●	DH4	5060411	**16,80**
A1244-17/64IN		5	●	DH4	5060338	**18,78**
A1244-6.8		5	●	DH4	5060412	**17,99**
A1244-6.9		5	●	DH4	5060413	**17,99**
A1244-7		5	●	DH4	5060414	**16,13**
A1244-7.1		1	●	DH4	5060415	**21,59**
A1244-9/32IN		1	●	DH4	5060447	**21,95**
A1244-7.2		1	●	DH4	5060416	**21,59**
A1244-7.3		1	●	DH4	5060417	**21,59**
A1244-7.4		1	●	DH4	5060418	**21,59**
A1244-7.5		1	●	DH4	5060419	**18,51**
A1244-19/64IN		1	●	DH4	5060339	**26,70**
A1244-7.6		1	●	DH4	5060420	**25,80**
A1244-7.7		1	●	DH4	5060421	**25,80**
A1244-7.8		1	●	DH4	5060422	**25,80**
A1244-7.9		1	●	DH4	5060423	**25,80**
A1244-5/16IN		1	●	DH4	5060401	**21,59**
A1244-8		1	●	DH4	5060427	**20,73**
A1244-8.1		1	●	DH4	5060428	**25,80**
A1244-8.2		1	●	DH4	5060429	**27,40**
A1244-8.3		1	●	DH4	5060430	**27,40**
A1244-21/64IN		1	●	DH4	5060360	**29,00**
A1244-8.4		1	●	DH4	5060431	**28,20**
A1244-8.5		1	●	DH4	5060432	**23,09**

Bezeichnung / Designation	Sorte / Grade	VE / US		Disc. Gr.	Article No.	EURO Stück / piece
A1244-8.6		1	●	DH4	5060433	**30,50**
A1244-8.7		1	●	DH4	5060434	**30,50**
A1244-11/32IN		1	●	DH4	5060325	**32,80**
A1244-8.8		1	●	DH4	5060435	**32,80**
A1244-8.9		1	●	DH4	5060436	**34,60**
A1244-9		1	●	DH4	5060437	**27,10**
A1244-9.1		1	●	DH4	5060438	**36,30**
A1244-9.2		1	●	DH4	5060439	**38,90**
A1244-9.3		1	●	DH4	5060440	**40,60**
A1244-9.4		1	●	DH4	5060441	**43,20**
A1244-9.5		1	●	DH4	5060442	**29,70**
A1244-3/8IN		1	●	DH4	5060379	**32,80**
A1244-9.6		1	●	DH4	5060443	**44,20**
A1244-9.7		1	●	DH4	5060444	**46,20**
A1244-9.8		1	●	DH4	5060445	**48,20**
A1244-9.9		1	●	DH4	5060446	**50,10**
A1244-10		1	●	DH4	5060319	**31,30**
A1244-10.2		1	●	DH4	5060320	**57,40**
A1244-13/32IN		1	●	DH4	5060331	**45,50**
A1244-10.5		1	●	DH4	5060321	**44,20**
A1244-27/64IN		1	●	DH4	5060363	**63,40**
A1244-11		1	●	DH4	5060322	**49,20**
A1244-7/16IN		1	●	DH4	5060424	**64,70**
A1244-11.2		1	●	DH4	5060323	**81,90**
A1244-11.5		1	●	DH4	5060324	**62,30**
A1244-15/32IN		1	●	DH4	5060336	**70,60**
A1244-12		1	●	DH4	5060327	**70,60**
A1244-31/64IN		1	●	DH4	5060380	**86,50**
A1244-12.5		1	●	DH4	5060328	**84,50**
A1244-1/2IN		1	●	DH4	5060314	**102,00**
A1244-13		1	●	DH4	5060329	**104,00**
A1244-33/64IN		1	●	DH4	5155055	**104,00**
A1244-17/32IN		1	●	DH4	5155161	**115,00**
A1244-13.5		1	●	DH4	5060330	**115,00**
A1244-35/64IN		1	●	DH4	5155054	**124,00**
A1244-14		1	●	DH4	5060333	**124,00**
A1244-9/16IN		1	●	DH4	5155162	**134,00**
A1244-14.5		1	●	DH4	5060334	**134,00**
A1244-15		1	●	DH4	5060335	**143,00**
A1247-1		10	●	DH4	5060509	**7,77**
A1247-NO60		10	●	DH4	5060505	**7,61**
A1247-NO59		10	●	DH4	5060503	**7,61**
A1247-NO58		10	●	DH4	5060502	**7,61**
A1247-NO57		10	●	DH4	5060501	**7,61**
A1247-1.1		10	●	DH4	5060510	**7,83**
A1247-NO56		10	●	DH4	5060500	**8,18**
A1247-3/64IN		10	●	DH4	5060579	**8,63**
A1247-1.2		10	●	DH4	5060511	**8,50**
A1247-1.25		10	●	DH4	5153972	**9,89**
A1247-1.3		10	●	DH4	5060512	**8,18**
A1247-NO55		10	●	DH4	5060499	**9,46**
A1247-NO54		10	●	DH4	5060498	**7,96**
A1247-1.4		10	●	DH4	5060513	**7,77**
A1247-1.5		10	●	DH4	5060514	**7,19**
A1247-NO53		10	●	DH4	5060497	**9,46**
A1247-1/16IN		10	●	DH4	5060519	**7,96**
A1247-1.6		10	●	DH4	5060515	**7,77**
A1247-NO52		10	●	DH4	5060496	**9,46**
A1247-1.7		10	●	DH4	5060516	**7,96**
A1247-NO51		10	●	DH4	5060495	**8,25**
A1247-NO50		10	●	DH4	5060494	**10,11**
A1247-1.8		10	●	DH4	5060517	**7,77**
A1247-NO49		10	●	DH4	5060492	**9,17**
A1247-1.9		10	●	DH4	5060518	**7,96**
A1247-NO48		10	●	DH4	5060491	**10,69**
A1247-5/64IN		10	●	DH4	5060604	**7,96**
A1247-NO47		10	●	DH4	5060490	**9,53**
A1247-2		10	●	DH4	5060552	**6,59**
A1247-NO46		10	●	DH4	5060489	**8,55**
A1247-NO45		10	●	DH4	5060488	**8,55**

Bezeichnung / Designation	Sorte / Grade	VE / US		Disc. Gr.	Article No.	EURO Stück / piece
A1247-2.1		10	●	DH4	5060553	8,38
A1247-NO44		10	●	DH4	5060487	10,11
A1247-2.2		10	●	DH4	5060554	8,38
A1247-NO43		10	●	DH4	5060486	9,98
A1247-2.3		10	●	DH4	5060555	8,38
A1247-NO42		10	●	DH4	5060485	7,26
A1247-3/32IN		10	●	DH4	5060578	7,55
A1247-2.4		10	●	DH4	5060556	8,43
A1247-NO41		10	●	DH4	5060484	10,94
A1247-NO40		10	●	DH4	5060483	8,63
A1247-2.5		10	●	DH4	5060557	6,85
A1247-NO39		10	●	DH4	5060481	9,17
A1247-NO38		10	●	DH4	5060480	9,17
A1247-2.6		10	●	DH4	5060558	8,55
A1247-NO37		10	●	DH4	5060479	9,17
A1247-2.7		10	●	DH4	5060559	8,88
A1247-NO36		10	●	DH4	5060478	8,94
A1247-7/64IN		10	●	DH4	5060627	7,96
A1247-NO35		10	●	DH4	5060477	7,77
A1247-2.8		10	●	DH4	5060560	8,82
A1247-NO34		10	●	DH4	5060476	8,63
A1247-NO33		10	●	DH4	5060475	8,63
A1247-2.9		10	●	DH4	5060561	8,82
A1247-NO32		10	●	DH4	5060474	8,63
A1247-3		10	●	DH4	5060567	6,85
A1247-NO31		5	●	DH4	5060473	8,63
A1247-3.1		5	●	DH4	5060568	8,88
A1247-1/8IN		5	●	DH4	5060522	7,77
A1247-3.2		5	●	DH4	5060569	7,77
A1247-NO30		5	●	DH4	5060472	8,18
A1247-3.3		5	●	DH4	5060570	7,77
A1247-3.4		5	●	DH4	5060571	9,53
A1247-NO29		5	●	DH4	5060470	8,63
A1247-3.5		5	●	DH4	5060572	7,83
A1247-NO28		5	●	DH4	5060469	9,17
A1247-9/64IN		5	●	DH4	5060649	9,17
A1247-3.6		5	●	DH4	5060573	9,81
A1247-NO27		5	●	DH4	5060468	10,69
A1247-3.7		5	●	DH4	5060574	9,98
A1247-NO26		5	●	DH4	5060467	10,76
A1247-NO25		5	●	DH4	5060466	10,76
A1247-3.8		5	●	DH4	5060575	10,05
A1247-NO24		5	●	DH4	5060465	10,81
A1247-3.9		5	●	DH4	5060576	10,35
A1247-NO23		5	●	DH4	5060464	10,81
A1247-5/32IN		5	●	DH4	5060603	9,98
A1247-NO22		5	●	DH4	5060463	10,81
A1247-4		5	●	DH4	5060582	8,38
A1247-NO21		5	●	DH4	5060462	10,81
A1247-NO20		5	●	DH4	5060461	10,81
A1247-4.1		5	●	DH4	5060583	10,35
A1247-4.2		5	●	DH4	5060584	9,89
A1247-NO19		5	●	DH4	5060459	10,81
A1247-4.3		5	●	DH4	5060585	10,50
A1247-NO18		5	●	DH4	5060458	11,00
A1247-11/64IN		5	●	DH4	5060532	11,00
A1247-NO17		5	●	DH4	5060457	11,25
A1247-4.4		5	●	DH4	5060586	10,81
A1247-NO16		5	●	DH4	5060456	11,00
A1247-4.5		5	●	DH4	5060587	10,35
A1247-NO15		5	●	DH4	5060455	11,38
A1247-4.6		5	●	DH4	5060588	11,20
A1247-NO14		5	●	DH4	5060454	11,61
A1247-NO13		5	●	DH4	5060453	11,61
A1247-4.7		5	●	DH4	5060589	11,25
A1247-3/16IN		5	●	DH4	5060577	11,20
A1247-4.8		5	●	DH4	5060590	11,49
A1247-NO12		5	●	DH4	5060452	11,74
A1247-NO11		5	●	DH4	5060451	11,74
A1247-4.9		5	●	DH4	5060591	11,66

Bezeichnung / Designation	Sorte / Grade	VE / US		Disc. Gr.	Article No.	EURO Stück / piece
A1247-NO10		5	●	DH4	5060450	12,30
A1247-NO9		5	●	DH4	5060508	12,30
A1247-5		5	●	DH4	5060592	10,16
A1247-NO8		5	●	DH4	5060507	12,30
A1247-5.1		5	●	DH4	5060593	11,66
A1247-NO7		5	●	DH4	5060506	12,30
A1247-13/64IN		5	●	DH4	5060540	12,30
A1247-NO6		5	●	DH4	5060504	12,30
A1247-5.2		5	●	DH4	5060594	11,92
A1247-NO5		5	●	DH4	5060493	12,30
A1247-5.3		5	●	DH4	5060595	12,33
A1247-NO4		5	●	DH4	5060482	13,66
A1247-5.4		5	●	DH4	5060596	13,20
A1247-NO3		5	●	DH4	5060471	13,66
A1247-5.5		5	●	DH4	5060597	14,16
A1247-7/32IN		5	●	DH4	5060626	13,66
A1247-5.6		5	●	DH4	5060598	13,53
A1247-NO2		5	●	DH4	5060460	13,93
A1247-5.7		5	●	DH4	5060599	13,73
A1247-NO1		5	●	DH4	5060449	13,93
A1247-5.8		5	●	DH4	5060600	13,86
A1247-5.9		5	●	DH4	5060601	14,16
A1247-15/64IN		5	●	DH4	5060548	13,93
A1247-6		5	●	DH4	5060605	13,31
A1247-6.1		5	●	DH4	5060606	15,03
A1247-6.2		5	●	DH4	5060607	15,13
A1247-6.3		5	●	DH4	5060608	15,48
A1247-1/4IN		5	●	DH4	5060521	16,39
A1247-6.4		5	●	DH4	5060609	16,39
A1247-6.5		5	●	DH4	5060610	15,03
A1247-6.6		5	●	DH4	5060611	16,58
A1247-6.7		5	●	DH4	5060612	16,80
A1247-17/64IN		5	●	DH4	5060550	18,78
A1247-6.8		5	●	DH4	5060613	17,99
A1247-6.9		5	●	DH4	5060614	17,99
A1247-7		5	●	DH4	5060615	16,13
A1247-7.1		1	●	DH4	5060616	21,59
A1247-9/32IN		1	●	DH4	5060648	21,95
A1247-7.2		1	●	DH4	5060617	21,59
A1247-7.3		1	●	DH4	5060618	21,59
A1247-7.4		1	●	DH4	5060619	21,59
A1247-7.5		1	●	DH4	5060620	18,51
A1247-19/64IN		1	●	DH4	5060551	26,70
A1247-7.6		1	●	DH4	5060621	25,80
A1247-7.7		1	●	DH4	5060622	25,80
A1247-7.8		1	●	DH4	5060623	25,80
A1247-7.9		1	●	DH4	5060624	25,80
A1247-5/16IN		1	●	DH4	5060602	21,59
A1247-8		1	●	DH4	5060628	20,73
A1247-8.1		1	●	DH4	5060629	25,80
A1247-8.2		1	●	DH4	5060630	27,40
A1247-8.3		1	●	DH4	5060631	27,40
A1247-21/64IN		1	●	DH4	5060562	29,00
A1247-8.4		1	●	DH4	5060632	28,20
A1247-8.5		1	●	DH4	5060633	23,09
A1247-8.6		1	●	DH4	5060634	30,50
A1247-8.7		1	●	DH4	5060635	30,50
A1247-11/32IN		1	●	DH4	5060531	32,80
A1247-8.8		1	●	DH4	5060636	32,80
A1247-8.9		1	●	DH4	5060637	34,60
A1247-9		1	●	DH4	5060638	27,10
A1247-9.1		1	●	DH4	5060639	36,30
A1247-23/64IN		1	●	DH4	5060563	38,90
A1247-9.2		1	●	DH4	5060640	38,90
A1247-9.3		1	●	DH4	5060641	40,60
A1247-9.4		1	●	DH4	5060642	43,20
A1247-9.5		1	●	DH4	5060643	29,70
A1247-3/8IN		1	●	DH4	5060580	32,80
A1247-9.6		1	●	DH4	5060644	44,20
A1247-9.7		1	●	DH4	5060645	46,20

Bezeichnung / Designation	Sorte / Grade	VE / US		Disc. Gr.	Article No.	EURO Stück / piece
A1247-9.8		1	●	DH4	5060646	**48,20**
A1247-9.9		1	●	DH4	5060647	**50,10**
A1247-25/64IN		1	●	DH4	5060564	**51,50**
A1247-10		1	●	DH4	5060523	**31,30**
A1247-10.2		1	●	DH4	5060524	**57,40**
A1247-13/32IN		1	●	DH4	5060539	**45,50**
A1247-10.5		1	●	DH4	5060525	**44,20**
A1247-27/64IN		1	●	DH4	5060565	**63,40**
A1247-10.8		1	●	DH4	5060526	**63,40**
A1247-11		1	●	DH4	5060527	**49,20**
A1247-7/16IN		1	●	DH4	5060625	**64,70**
A1247-11.2		1	●	DH4	5060528	**81,90**
A1247-11.5		1	●	DH4	5060529	**62,30**
A1247-29/64IN		1	●	DH4	5060566	**64,30**
A1247-11.8		1	●	DH4	5060530	**70,60**
A1247-15/32IN		1	●	DH4	5060547	**70,60**
A1247-12		1	●	DH4	5060533	**70,60**
A1247-31/64IN		1	●	DH4	5060581	**86,50**
A1247-12.5		1	●	DH4	5060534	**84,50**
A1247-1/2IN		1	●	DH4	5060520	**102,00**
A1247-13		1	●	DH4	5060535	**104,00**
A1247-13.1		1	●	DH4	5060536	**115,00**
A1247-13.3		1	●	DH4	5060537	**115,00**
A1247-13.5		1	●	DH4	5060538	**115,00**
A1247-14		1	●	DH4	5060541	**124,00**
A1247-14.5		1	●	DH4	5060542	**134,00**
A1247-15		1	●	DH4	5060543	**143,00**
A1247-15.1		1	●	DH4	5060544	**104,00**
A1247-15.3		1	●	DH4	5060545	**106,00**
A1247-15.5		1	●	DH4	5060546	**108,00**
A1247-16		1	●	DH4	5060549	**116,00**
A1249XPL-1	XPL	5	●	DH8	5236486	**19,13**
A1249XPL-NO60	XPL	5	●	DH8	5337334	**18,06**
A1249XPL-NO59	XPL	5	●	DH8	5337332	**18,06**
A1249XPL-NO58	XPL	5	●	DH8	5337331	**18,06**
A1249XPL-NO57	XPL	5	●	DH8	5337330	**18,06**
A1249XPL-1.1	XPL	5	●	DH8	5236487	**18,06**
A1249XPL-NO56	XPL	5	●	DH8	5337329	**18,06**
A1249XPL-3/64IN	XPL	5	●	DH8	5337265	**18,06**
A1249XPL-1.2	XPL	5	●	DH8	5236488	**18,06**
A1249XPL-1.3	XPL	5	●	DH8	5236489	**18,06**
A1249XPL-NO55	XPL	5	●	DH8	5337328	**18,06**
A1249XPL-NO54	XPL	5	●	DH8	5337327	**18,06**
A1249XPL-1.4	XPL	5	●	DH8	5236490	**18,06**
A1249XPL-1.5	XPL	5	●	DH8	5236491	**18,06**
A1249XPL-NO53	XPL	5	●	DH8	5337326	**18,06**
A1249XPL-1/16IN	XPL	5	●	DH8	5337273	**17,63**
A1249XPL-1.6	XPL	5	●	DH8	5236492	**17,63**
A1249XPL-NO52	XPL	5	●	DH8	5337325	**17,63**
A1249XPL-1.7	XPL	5	●	DH8	5236493	**17,63**
A1249XPL-NO51	XPL	5	●	DH8	5337324	**17,63**
A1249XPL-NO50	XPL	5	●	DH8	5337323	**17,63**
A1249XPL-1.8	XPL	5	●	DH8	5236494	**17,63**
A1249XPL-NO49	XPL	5	●	DH8	5337321	**17,63**
A1249XPL-1.9	XPL	5	●	DH8	5236495	**17,63**
A1249XPL-NO48	XPL	5	●	DH8	5337320	**17,63**
A1249XPL-5/64IN	XPL	5	●	DH8	5337266	**16,91**
A1249XPL-NO47	XPL	5	●	DH8	5337319	**16,91**
A1249XPL-2	XPL	5	●	DH8	5236523	**16,91**
A1249XPL-NO46	XPL	1	●	DH8	5337318	**17,63**
A1249XPL-NO45	XPL	1	●	DH8	5337317	**17,63**
A1249XPL-2.1	XPL	1	●	DH8	5236524	**17,63**
A1249XPL-NO44	XPL	1	●	DH8	5337316	**17,63**
A1249XPL-2.2	XPL	1	●	DH8	5236525	**17,63**
A1249XPL-NO43	XPL	1	●	DH8	5337315	**17,63**
A1249XPL-2.3	XPL	1	●	DH8	5236526	**17,63**
A1249XPL-NO42	XPL	1	●	DH8	5337314	**17,63**
A1249XPL-3/32IN	XPL	1	●	DH8	5337260	**17,63**
A1249XPL-2.4	XPL	1	●	DH8	5236527	**17,63**
A1249XPL-NO41	XPL	1	●	DH8	5337313	**17,63**

Bezeichnung / Designation	Sorte / Grade	VE / US		Disc. Gr.	Article No.	EURO Stück / piece
A1249XPL-NO40	XPL	1	●	DH8	5337312	**16,91**
A1249XPL-2.5	XPL	1	●	DH8	5236528	**16,91**
A1249XPL-NO39	XPL	1	●	DH8	5337310	**17,63**
A1249XPL-NO38	XPL	1	●	DH8	5337309	**17,63**
A1249XPL-2.6	XPL	1	●	DH8	5236529	**17,63**
A1249XPL-NO37	XPL	1	●	DH8	5337308	**18,79**
A1249XPL-2.7	XPL	1	●	DH8	5236530	**18,79**
A1249XPL-NO36	XPL	1	●	DH8	5337307	**18,79**
A1249XPL-7/64IN	XPL	1	●	DH8	5337267	**18,79**
A1249XPL-NO35	XPL	1	●	DH8	5337306	**18,79**
A1249XPL-2.8	XPL	1	●	DH8	5236531	**18,79**
A1249XPL-NO34	XPL	1	●	DH8	5337305	**18,79**
A1249XPL-NO33	XPL	1	●	DH8	5337304	**18,79**
A1249XPL-2.9	XPL	1	●	DH8	5236532	**18,79**
A1249XPL-NO32	XPL	1	●	DH8	5337303	**17,24**
A1249XPL-3	XPL	1	●	DH8	5236534	**17,24**
A1249XPL-NO31	XPL	1	●	DH8	5337302	**19,13**
A1249XPL-3.1	XPL	1	●	DH8	5236535	**19,13**
A1249XPL-1/8IN	XPL	1	●	DH8	5337272	**19,13**
A1249XPL-3.2	XPL	1	●	DH8	5236536	**19,13**
A1249XPL-NO30	XPL	1	●	DH8	5337301	**19,13**
A1249XPL-3.3	XPL	1	●	DH8	5236537	**19,13**
A1249XPL-3.4	XPL	1	●	DH8	5236538	**19,13**
A1249XPL-NO29	XPL	1	●	DH8	5337299	**19,13**
A1249XPL-3.5	XPL	1	●	DH8	5236539	**19,13**
A1249XPL-NO28	XPL	1	●	DH8	5337298	**20,43**
A1249XPL-9/64IN	XPL	1	●	DH8	5337268	**20,43**
A1249XPL-3.6	XPL	1	●	DH8	5236540	**20,43**
A1249XPL-NO27	XPL	1	●	DH8	5337297	**20,43**
A1249XPL-3.7	XPL	1	●	DH8	5236541	**20,43**
A1249XPL-NO26	XPL	1	●	DH8	5337296	**20,80**
A1249XPL-NO25	XPL	1	●	DH8	5337295	**20,80**
A1249XPL-3.8	XPL	1	●	DH8	5236542	**20,80**
A1249XPL-NO24	XPL	1	●	DH8	5337294	**20,80**
A1249XPL-3.9	XPL	1	●	DH8	5236543	**20,80**
A1249XPL-NO23	XPL	1	●	DH8	5337293	**20,80**
A1249XPL-5/32IN	XPL	1	●	DH8	5337261	**19,83**
A1249XPL-NO22	XPL	1	●	DH8	5337292	**19,83**
A1249XPL-4	XPL	1	●	DH8	5236544	**19,83**
A1249XPL-NO21	XPL	1	●	DH8	5337291	**21,30**
A1249XPL-NO20	XPL	1	●	DH8	5337290	**21,30**
A1249XPL-4.1	XPL	1	●	DH8	5236545	**21,30**
A1249XPL-4.2	XPL	1	●	DH8	5236546	**21,30**
A1249XPL-NO19	XPL	1	●	DH8	5337288	**21,30**
A1249XPL-4.3	XPL	1	●	DH8	5236547	**21,30**
A1249XPL-NO18	XPL	1	●	DH8	5337287	**21,30**
A1249XPL-11/64IN	XPL	1	●	DH8	5337269	**21,30**
A1249XPL-NO17	XPL	1	●	DH8	5337286	**21,30**
A1249XPL-4.4	XPL	1	●	DH8	5236548	**21,30**
A1249XPL-NO16	XPL	1	●	DH8	5337285	**20,60**
A1249XPL-4.5	XPL	1	●	DH8	5236549	**20,60**
A1249XPL-NO15	XPL	1	●	DH8	5337284	**22,19**
A1249XPL-4.6	XPL	1	●	DH8	5236550	**22,19**
A1249XPL-NO14	XPL	1	●	DH8	5337283	**22,19**
A1249XPL-4.65	XPL	1	●	DH8	5236551	**22,19**
A1249XPL-NO13	XPL	1	●	DH8	5337282	**22,19**
A1249XPL-4.7	XPL	1	●	DH8	5236552	**22,19**
A1249XPL-3/16IN	XPL	1	●	DH8	5337275	**22,19**
A1249XPL-4.8	XPL	1	●	DH8	5236553	**22,19**
A1249XPL-NO12	XPL	1	●	DH8	5337281	**22,19**
A1249XPL-NO11	XPL	1	●	DH8	5337280	**22,19**
A1249XPL-4.9	XPL	1	●	DH8	5236554	**22,19**
A1249XPL-NO10	XPL	1	●	DH8	5337279	**22,19**
A1249XPL-NO9	XPL	1	●	DH8	5337337	**21,66**
A1249XPL-5	XPL	1	●	DH8	5236555	**21,66**
A1249XPL-NO8	XPL	1	●	DH8	5337336	**22,95**
A1249XPL-5.1	XPL	1	●	DH8	5236556	**22,95**
A1249XPL-NO7	XPL	1	●	DH8	5337335	**22,95**
A1249XPL-13/64IN	XPL	1	●	DH8	5337339	**22,95**
A1249XPL-NO6	XPL	1	●	DH8	5337333	**22,95**

Bezeichnung / Designation	Sorte / Grade	VE / US		Disc. Gr.	Article No.	EURO Stück / piece
A1249XPL-5.2	XPL	1	●	DH8	5236557	22,95
A1249XPL-NO5	XPL	1	●	DH8	5337322	22,95
A1249XPL-5.3	XPL	1	●	DH8	5236558	22,95
A1249XPL-NO4	XPL	1	●	DH8	5337311	22,95
A1249XPL-5.4	XPL	1	●	DH8	5236559	22,95
A1249XPL-NO3	XPL	1	●	DH8	5337300	22,95
A1249XPL-5.5	XPL	1	●	DH8	5236560	22,95
A1249XPL-5.55	XPL	1	●	DH8	5236561	24,19
A1249XPL-7/32IN	XPL	1	●	DH8	5337262	24,19
A1249XPL-5.6	XPL	1	●	DH8	5236562	24,19
A1249XPL-NO2	XPL	1	●	DH8	5337289	24,19
A1249XPL-5.7	XPL	1	●	DH8	5236563	24,19
A1249XPL-NO1	XPL	1	●	DH8	5337278	24,19
A1249XPL-5.8	XPL	1	●	DH8	5236564	24,19
A1249XPL-5.9	XPL	1	●	DH8	5236565	24,19
A1249XPL-15/64IN	XPL	1	●	DH8	5337341	24,19
A1249XPL-6	XPL	1	●	DH8	5236566	24,19
A1249XPL-6.1	XPL	1	●	DH8	5236567	34,00
A1249XPL-6.2	XPL	1	●	DH8	5236568	34,00
A1249XPL-6.3	XPL	1	●	DH8	5236569	36,20
A1249XPL-1/4IN	XPL	1	●	DH8	5337271	36,20
A1249XPL-6.4	XPL	1	●	DH8	5236570	36,20
A1249XPL-6.5	XPL	1	●	DH8	5236571	34,00
A1249XPL-6.6	XPL	1	●	DH8	5236572	39,30
A1249XPL-6.7	XPL	1	●	DH8	5236573	39,30
A1249XPL-17/64IN	XPL	1	●	DH8	5337342	39,30
A1249XPL-6.8	XPL	1	●	DH8	5236574	39,30
A1249XPL-6.9	XPL	1	●	DH8	5236575	39,30
A1249XPL-7	XPL	1	●	DH8	5236576	35,30
A1249XPL-7.1	XPL	1	●	DH8	5236577	46,70
A1249XPL-9/32IN	XPL	1	●	DH8	5337263	46,70
A1249XPL-7.2	XPL	1	●	DH8	5236578	46,70
A1249XPL-7.3	XPL	1	●	DH8	5236579	46,70
A1249XPL-7.4	XPL	1	●	DH8	5236580	46,70
A1249XPL-7.5	XPL	1	●	DH8	5236581	41,50
A1249XPL-19/64IN	XPL	1	●	DH8	5337343	41,50
A1249XPL-7.6	XPL	1	●	DH8	5236582	49,60
A1249XPL-7.7	XPL	1	●	DH8	5236583	49,60
A1249XPL-7.8	XPL	1	●	DH8	5236584	49,60
A1249XPL-7.9	XPL	1	●	DH8	5236585	49,60
A1249XPL-5/16IN	XPL	1	●	DH8	5337276	42,70
A1249XPL-8	XPL	1	●	DH8	5236586	42,70
A1249XPL-8.1	XPL	1	●	DH8	5236587	56,30
A1249XPL-8.2	XPL	1	●	DH8	5236588	56,30
A1249XPL-8.3	XPL	1	●	DH8	5236589	60,30
A1249XPL-21/64IN	XPL	1	●	DH8	5337344	60,30
A1249XPL-8.4	XPL	1	●	DH8	5236590	60,30
A1249XPL-8.5	XPL	1	●	DH8	5236591	45,50
A1249XPL-8.6	XPL	1	●	DH8	5236592	65,60
A1249XPL-8.7	XPL	1	●	DH8	5236593	65,60
A1249XPL-11/32IN	XPL	1	●	DH8	5337264	65,60
A1249XPL-8.8	XPL	1	●	DH8	5236594	65,60
A1249XPL-8.9	XPL	1	●	DH8	5236595	65,60
A1249XPL-9	XPL	1	●	DH8	5236596	46,70
A1249XPL-9.1	XPL	1	●	DH8	5236597	68,10
A1249XPL-23/64IN	XPL	1	●	DH8	5337345	68,10
A1249XPL-9.2	XPL	1	●	DH8	5236598	68,10
A1249XPL-9.3	XPL	1	●	DH8	5236599	68,10
A1249XPL-9.4	XPL	1	●	DH8	5236600	68,10
A1249XPL-9.5	XPL	1	●	DH8	5236601	51,70
A1249XPL-3/8IN	XPL	1	●	DH8	5337274	73,00
A1249XPL-9.6	XPL	1	●	DH8	5236602	73,00
A1249XPL-9.7	XPL	1	●	DH8	5236603	73,00
A1249XPL-9.8	XPL	1	●	DH8	5236604	73,00
A1249XPL-9.9	XPL	1	●	DH8	5236605	73,00
A1249XPL-25/64IN	XPL	1	●	DH8	5337346	52,30
A1249XPL-10	XPL	1	●	DH8	5236496	52,30
A1249XPL-10.2	XPL	1	●	DH8	5236497	75,50
A1249XPL-13/32IN	XPL	1	●	DH8	5337338	71,20
A1249XPL-10.5	XPL	1	●	DH8	5236498	71,20

Bezeichnung / Designation	Sorte / Grade	VE / US		Disc. Gr.	Article No.	EURO Stück / piece
A1249XPL-27/64IN	XPL	1	●	DH8	5337347	71,20
A1249XPL-11	XPL	1	●	DH8	5236499	71,20
A1249XPL-7/16IN	XPL	1	●	DH8	5337277	134,00
A1249XPL-11.2	XPL	1	●	DH8	5236500	134,00
A1249XPL-11.3	XPL	1	●	DH8	5236501	134,00
A1249XPL-11.5	XPL	1	●	DH8	5236502	88,50
A1249XPL-29/64IN	XPL	1	●	DH8	5337348	88,50
A1249XPL-15/32IN	XPL	1	●	DH8	5337340	88,50
A1249XPL-12	XPL	1	●	DH8	5236503	88,50
A1249XPL-31/64IN	XPL	1	●	DH8	5337349	110,00
A1249XPL-12.5	XPL	1	●	DH8	5236504	110,00
A1249XPL-1/2IN	XPL	1	●	DH8	5337270	120,00
A1249XPL-13	XPL	1	●	DH8	5236505	130,00
A1249XPL-13.1	XPL	1	●	DH8	5236506	136,00
A1249XPL-13.3	XPL	1	●	DH8	5236507	136,00
A1249XPL-13.5	XPL	1	●	DH8	5236508	143,00
A1249XPL-14	XPL	1	●	DH8	5236509	155,00
A1249XPL-14.5	XPL	1	●	DH8	5236510	166,00
A1249XPL-15	XPL	1	●	DH8	5236511	178,00
A1249XPL-15.1	XPL	1	●	DH8	5236512	184,00
A1249XPL-15.3	XPL	1	●	DH8	5236513	184,00
A1249XPL-15.5	XPL	1	●	DH8	5236514	190,00
A1249XPL-16	XPL	1	●	DH8	5236515	201,00
A1249XPL-16.5	XPL	1	●	DH8	5236516	213,00
A1249XPL-17	XPL	1	●	DH8	5236517	224,00
A1249XPL-17.5	XPL	1	●	DH8	5236518	236,00
A1249XPL-18	XPL	1	●	DH8	5236519	248,00
A1249XPL-18.5	XPL	1	●	DH8	5236520	259,00
A1249XPL-19	XPL	1	●	DH8	5236521	271,00
A1249XPL-19.5	XPL	1	●	DH8	5236522	283,00
A1249XPL-20	XPL	1	●	DH8	5236533	294,00
A1254TFT-3	TFT	1	●	DHB	5061003	16,06
A1254TFT-3.2	TFT	1	●	DHB	5061004	18,96
A1254TFT-3.3	TFT	1	●	DHB	5061005	18,71
A1254TFT-3.4	TFT	1	●	DHB	5061006	20,17
A1254TFT-3.5	TFT	1	●	DHB	5061007	19,30
A1254TFT-3.7	TFT	1	●	DHB	5061008	21,66
A1254TFT-3.8	TFT	1	●	DHB	5061009	20,78
A1254TFT-4	TFT	1	●	DHB	5061010	20,61
A1254TFT-4.2	TFT	1	●	DHB	5061011	23,12
A1254TFT-4.3	TFT	1	●	DHB	5061012	25,50
A1254TFT-4.5	TFT	1	●	DHB	5061013	23,70
A1254TFT-4.65	TFT	1	●	DHB	5061014	29,60
A1254TFT-4.7	TFT	1	●	DHB	5061015	29,50
A1254TFT-4.8	TFT	1	●	DHB	5061016	27,80
A1254TFT-5	TFT	1	●	DHB	5061017	31,10
A1254TFT-5.1	TFT	1	●	DHB	5061018	32,40
A1254TFT-5.3	TFT	1	●	DHB	5061019	34,80
A1254TFT-5.5	TFT	1	●	DHB	5061020	31,20
A1254TFT-5.55	TFT	1	●	DHB	5061021	37,70
A1254TFT-5.6	TFT	1	●	DHB	5061022	38,30
A1254TFT-5.8	TFT	1	●	DHB	5061023	35,80
A1254TFT-6	TFT	1	●	DHB	5061024	34,00
A1254TFT-6.5	TFT	1	●	DHB	5061025	40,80
A1254TFT-6.6	TFT	1	●	DHB	5061026	42,90
A1254TFT-6.8	TFT	1	●	DHB	5061027	40,80
A1254TFT-6.9	TFT	1	●	DHB	5061028	42,90
A1254TFT-7	TFT	1	●	DHB	5061029	40,80
A1254TFT-7.4	TFT	1	●	DHB	5061030	46,10
A1254TFT-7.5	TFT	1	●	DHB	5061031	45,20
A1254TFT-7.8	TFT	1	●	DHB	5061032	44,20
A1254TFT-8	TFT	1	●	DHB	5061033	46,10
A1254TFT-8.5	TFT	1	●	DHB	5061034	48,80
A1254TFT-8.6	TFT	1	●	DHB	5061035	54,90
A1254TFT-8.8	TFT	1	●	DHB	5061036	51,40
A1254TFT-9	TFT	1	●	DHB	5061037	51,70
A1254TFT-9.3	TFT	1	●	DHB	5061038	59,10
A1254TFT-9.4	TFT	1	●	DHB	5061039	56,40
A1254TFT-9.5	TFT	1	●	DHB	5061040	57,20
A1254TFT-9.8	TFT	1	●	DHB	5061041	61,30

Bezeichnung / Designation	Sorte / Grade	VE / US		Disc. Gr.	Article No.	EURO Stück / piece
A1254TFT-10	TFT	1	●	DHB	5060979	59,90
A1254TFT-10.2	TFT	1	●	DHB	5060980	73,60
A1254TFT-10.3	TFT	1	●	DHB	5060981	75,50
A1254TFT-10.5	TFT	1	●	DHB	5060982	78,20
A1254TFT-11	TFT	1	●	DHB	5060983	81,40
A1254TFT-11.2	TFT	1	●	DHB	5060984	92,40
A1254TFT-11.3	TFT	1	●	DHB	5060985	86,80
A1254TFT-11.5	TFT	1	●	DHB	5060986	92,40
A1254TFT-11.8	TFT	1	●	DHB	5060987	95,30
A1254TFT-12	TFT	1	●	DHB	5060988	94,30
A1254TFT-12.1	TFT	1	●	DHB	5060989	113,00
A1254TFT-12.5	TFT	1	●	DHB	5060990	113,00
A1254TFT-13	TFT	1	●	DHB	5060991	118,00
A1254TFT-13.2	TFT	1	●	DHB	5060992	185,00
A1254TFT-13.5	TFT	1	●	DHB	5060993	185,00
A1254TFT-14	TFT	1	●	DHB	5060994	173,00
A1254TFT-14.1	TFT	1	●	DHB	5060995	198,00
A1254TFT-14.2	TFT	1	●	DHB	5060996	198,00
A1254TFT-14.5	TFT	1	●	DHB	5060997	198,00
A1254TFT-15	TFT	1	●	DHB	5060998	206,00
A1254TFT-15.1	TFT	1	●	DHB	5060999	216,00
A1254TFT-15.2	TFT	1	●	DHB	5061000	216,00
A1254TFT-15.5	TFT	1	●	DHB	5061001	216,00
A1254TFT-16	TFT	1	●	DHB	5061002	224,00
A1263-0.6		10	●	DS2	5061113	10,57
A1263-0.7		10	●	DS2	5061114	10,57
A1263-0.8		10	●	DS2	5061115	10,57
A1263-0.9		10	●	DS2	5061116	10,57
A1263-1		10	●	DS2	5061117	10,57
A1263-1.1		10	●	DS2	5061118	10,57
A1263-1.2		10	●	DS2	5061119	10,57
A1263-1.3		10	●	DS2	5061120	10,57
A1263-1.4		10	●	DS2	5061121	10,57
A1263-1.5		10	●	DS2	5061122	10,57
A1263-1.6		10	●	DS2	5061123	10,57
A1263-1.7		10	●	DS2	5061124	10,57
A1263-1.8		10	●	DS2	5061125	10,57
A1263-1.9		10	●	DS2	5061126	10,57
A1263-2		10	●	DS2	5061136	10,57
A1263-2.1		1	●	DS2	5061137	15,47
A1263-2.2		1	●	DS2	5061138	15,47
A1263-2.3		1	●	DS2	5061139	15,47
A1263-2.4		1	●	DS2	5061140	15,47
A1263-2.5		1	●	DS2	5061141	15,47
A1263-2.6		1	●	DS2	5061142	15,47
A1263-2.7		1	●	DS2	5061143	15,47
A1263-2.8		1	●	DS2	5061144	15,47
A1263-2.9		1	●	DS2	5061145	15,47
A1263-3		1	●	DS2	5061146	22,24
A1263-3.1		1	●	DS2	5061147	22,24
A1263-3.2		1	●	DS2	5061148	22,24
A1263-3.3		1	●	DS2	5061149	22,24
A1263-3.4		1	●	DS2	5061150	22,24
A1263-3.5		1	●	DS2	5061151	22,24
A1263-3.6		1	●	DS2	5061152	22,24
A1263-3.7		1	●	DS2	5061153	22,24
A1263-3.8		1	●	DS2	5061154	22,24
A1263-3.9		1	●	DS2	5061155	22,24
A1263-4		1	●	DS2	5061156	22,24
A1263-4.1		1	●	DS2	5061157	30,90
A1263-4.2		1	●	DS2	5061158	30,90
A1263-4.3		1	●	DS2	5061159	30,90
A1263-4.4		1	●	DS2	5061160	30,90
A1263-4.5		1	●	DS2	5061161	30,90
A1263-4.6		1	●	DS2	5061162	30,90
A1263-4.7		1	●	DS2	5061163	30,90
A1263-4.8		1	●	DS2	5061164	30,90
A1263-4.9		1	●	DS2	5061165	30,90
A1263-5		1	●	DS2	5061166	30,90
A1263-5.1		1	●	DS2	5061167	46,90

Bezeichnung / Designation	Sorte / Grade	VE / US		Disc. Gr.	Article No.	EURO Stück / piece
A1263-5.2		1	●	DS2	5061168	46,90
A1263-5.3		1	●	DS2	5061169	46,90
A1263-5.4		1	●	DS2	5061170	46,90
A1263-5.5		1	●	DS2	5061171	46,90
A1263-5.6		1	●	DS2	5061172	46,90
A1263-5.7		1	●	DS2	5061173	46,90
A1263-5.8		1	●	DS2	5061174	46,90
A1263-5.9		1	●	DS2	5061175	46,90
A1263-6		1	●	DS2	5061176	46,90
A1263-6.1		1	●	DS2	5061177	66,70
A1263-6.2		1	●	DS2	5061178	66,70
A1263-6.3		1	●	DS2	5061179	66,70
A1263-6.4		1	●	DS2	5061180	66,70
A1263-6.5		1	●	DS2	5061181	66,70
A1263-6.6		1	●	DS2	5061182	66,70
A1263-6.7		1	●	DS2	5061183	66,70
A1263-6.8		1	●	DS2	5061184	66,70
A1263-6.9		1	●	DS2	5061185	66,70
A1263-7		1	●	DS2	5061186	66,70
A1263-7.1		1	●	DS2	5061187	81,50
A1263-7.2		1	●	DS2	5061188	81,50
A1263-7.3		1	●	DS2	5061189	81,50
A1263-7.4		1	●	DS2	5061190	81,50
A1263-7.5		1	●	DS2	5061191	81,50
A1263-7.6		1	●	DS2	5061192	81,50
A1263-7.7		1	●	DS2	5061193	81,50
A1263-7.8		1	●	DS2	5061194	81,50
A1263-7.9		1	●	DS2	5061195	81,50
A1263-8		1	●	DS2	5061196	81,50
A1263-8.1		1	●	DS2	5061197	95,20
A1263-8.2		1	●	DS2	5061198	95,20
A1263-8.3		1	●	DS2	5061199	95,20
A1263-8.4		1	●	DS2	5061200	95,20
A1263-8.5		1	●	DS2	5061201	95,20
A1263-8.6		1	●	DS2	5061202	95,20
A1263-8.7		1	●	DS2	5061203	95,20
A1263-8.8		1	●	DS2	5061204	95,20
A1263-8.9		1	●	DS2	5061205	95,20
A1263-9		1	●	DS2	5061206	95,20
A1263-9.1		1	●	DS2	5061207	95,20
A1263-9.2		1	●	DS2	5061208	95,20
A1263-9.3		1	●	DS2	5061209	95,20
A1263-9.4		1	●	DS2	5061210	95,20
A1263-9.5		1	●	DS2	5061211	95,20
A1263-9.6		1	●	DS2	5061212	95,20
A1263-9.7		1	●	DS2	5061213	95,20
A1263-9.8		1	●	DS2	5061214	95,20
A1263-9.9		1	●	DS2	5061215	95,20
A1263-10		1	●	DS2	5061127	95,20
A1263-10.2		1	●	DS2	5061128	129,00
A1263-10.5		1	●	DS2	5061129	129,00
A1263-10.8		1	●	DS2	5061130	129,00
A1263-11		1	●	DS2	5061131	129,00
A1263-11.2		1	●	DS2	5061132	129,00
A1263-11.5		1	●	DS2	5061133	129,00
A1263-11.8		1	●	DS2	5061134	129,00
A1263-12		1	●	DS2	5061135	129,00
A1276TFL-3	TFL	1	●	DS2	5061424	67,00
A1276TFL-3.1	TFL	1	●	DS2	5061425	68,20
A1276TFL-3.2	TFL	1	●	DS2	5061426	69,90
A1276TFL-3.3	TFL	1	●	DS2	5061427	71,70
A1276TFL-3.4	TFL	1	●	DS2	5061428	72,20
A1276TFL-3.5	TFL	1	●	DS2	5061429	72,20
A1276TFL-3.7	TFL	1	●	DS2	5061430	72,90
A1276TFL-3.8	TFL	1	●	DS2	5061431	73,40
A1276TFL-4	TFL	1	●	DS2	5061432	73,40
A1276TFL-4.2	TFL	1	●	DS2	5061433	75,80
A1276TFL-4.3	TFL	1	●	DS2	5061434	77,50
A1276TFL-4.5	TFL	1	●	DS2	5061435	78,10
A1276TFL-4.7	TFL	1	●	DS2	5061436	79,90

Bezeichnung / Designation	Sorte / Grade	VE / US		Disc. Gr.	Article No.	EURO Stück / piece
A1276TFL-4.8	TFL	1	●	DS2	5061437	80,40
A1276TFL-5	TFL	1	●	DS2	5061438	81,00
A1276TFL-5.1	TFL	1	●	DS2	5061439	81,60
A1276TFL-5.2	TFL	1	●	DS2	5061440	81,60
A1276TFL-5.5	TFL	1	●	DS2	5061441	82,80
A1276TFL-5.8	TFL	1	●	DS2	5061442	85,70
A1276TFL-6	TFL	1	●	DS2	5061443	86,80
A1276TFL-6.1	TFL	1	●	DS2	5061444	88,60
A1276TFL-6.5	TFL	1	●	DS2	5061445	89,70
A1276TFL-6.6	TFL	1	●	DS2	5061446	96,20
A1276TFL-6.8	TFL	1	●	DS2	5061447	97,90
A1276TFL-7	TFL	1	●	DS2	5061448	101,00
A1276TFL-8	TFL	1	●	DS2	5061451	121,00
A1276TFL-8.5	TFL	1	●	DS2	5061453	136,00
A1276TFL-9	TFL	1	●	DS2	5061454	146,00
A1276TFL-10	TFL	1	●	DS2	5061418	168,00
A1276TFL-10.2	TFL	1	●	DS2	5061419	201,00
A12M-SCLCL06		1	●	060	5194469	126,00
A12M-SCLCL06-R		1	●	060	5204648	126,00
A12M-SCLCR06		1	●	060	5194485	126,00
A12M-SCLCR06-R		1	●	060	5204649	126,00
A12M-SDQCL07		1	●	060	5204654	126,00
A12M-SDQCL07-R		1	●	060	5204656	126,00
A12M-SDQCR07		1	●	060	5204655	126,00
A12M-SDQCR07-R		1	●	060	5204657	126,00
A12M-SDUCL07		1	●	060	5194506	126,00
A12M-SDUCL07-R		1	●	060	5204668	126,00
A12M-SDUCR07		1	●	060	5194507	126,00
A12M-SDUCR07-R		1	●	060	5204669	126,00
A12M-SDXCL07		1	●	060	7807981	126,00
A12M-SDXCR07		1	●	060	7807982	126,00
A12M-STFCL11		1	●	060	5204678	126,00
A12M-STFCL11-R		1	●	060	5204680	126,00
A12M-STFCR11		1	●	060	5204679	126,00
A12M-STFCR11-R		1	●	060	5204681	126,00
A12M-SWLCL04		1	●	060	5673672	126,00
A12M-SWLCL04-R		1	■	060	5204694*	126,00
A12M-SWLCR04		1	●	060	5673651	126,00
A12M-SWLCR04-R		1	■	060	5204695*	126,00
A12S-DCLNL3		1	●	060	6351534	252,00
A12S-DCLNR3		1	●	060	6351535	252,00
A12S-DDUNL3		1	●	060	6351538	252,00
A12S-DDUNR3		1	●	060	6351539	252,00
A12S-SCLPL3		1	●	060	7394713	155,00
A12S-SCLPR3		1	●	060	7394714	155,00
A150M.0.32.030.16		1	●	070	5007395	248,00
A150M.0.40.030.16		1	●	070	5007396	248,00
A150M.0.40.030.22		1	●	070	5007397	254,00
A150M.0.50.035.16		1	●	070	5007443	274,00
A150M.0.50.035.22		1	●	070	5007444	263,00
A150M.0.50.035.27		1	●	070	5007445	279,00
A150M.0.50.040.32		1	●	070	5007446	289,00
A150M.0.63.035.22		1	●	070	5007365	263,00
A150M.0.63.035.27		1	●	070	5007366	279,00
A150M.0.63.040.32		1	●	070	5007367	289,00
A150M.0.63.040.40		1	●	070	5007368	327,00
A150M.0.80.040.27		1	●	070	5007370	289,00
A150M.0.80.040.32		1	●	070	5007371	305,00
A150M.0.80.040.40		1	●	070	5007372	344,00
A150M.0.80.045.50		1	●	070	5007373	364,00
A150M.0.80.055.60		1	●	070	5007486	387,00
A1511-0.5		10	●	DH4	5061553	16,97
A1511-0.6		10	●	DH4	5061554	15,42
A1511-0.7		10	●	DH4	5061555	13,42
A1511-0.8		10	●	DH4	5061556	12,31
A1511-0.9		10	●	DH4	5061557	11,52
A1511-1		10	●	DH4	5061558	9,18
A1511-1.1		10	●	DH4	5061560	9,34
A1511-1.2		10	●	DH4	5061562	8,94
A1511-1.3		10	●	DH4	5061564	8,09

Bezeichnung / Designation	Sorte / Grade	VE / US		Disc. Gr.	Article No.	EURO Stück / piece
A1511-1.4		10	●	DH4	5061566	7,57
A1511-1.5		10	●	DH4	5061568	6,51
A1511-1.6		10	●	DH4	5061570	6,76
A1511-1.65		10	●	DH4	5061571	9,41
A1511-1.7		10	●	DH4	5061572	6,76
A1511-1.75		10	●	DH4	5061573	8,74
A1511-1.8		10	●	DH4	5061574	6,76
A1511-1.9		10	●	DH4	5061576	6,76
A1511-2		10	●	DH4	5061608	4,54
A1511-2.05		10	●	DH4	5061609	8,14
A1511-2.1		10	●	DH4	5061610	5,39
A1511-2.2		10	●	DH4	5061612	5,39
A1511-2.25		10	●	DH4	5061613	8,35
A1511-2.3		10	●	DH4	5061614	5,39
A1511-2.4		10	●	DH4	5061616	5,39
A1511-2.5		10	●	DH4	5061618	4,70
A1511-2.6		10	●	DH4	5061620	5,83
A1511-2.7		10	●	DH4	5061622	5,83
A1511-2.8		10	●	DH4	5061624	5,83
A1511-2.9		10	●	DH4	5061626	5,83
A1511-3		10	●	DH4	5061634	4,80
A1511-3.1		10	●	DH4	5061636	5,89
A1511-3.15		10	●	DH4	5061637	9,15
A1511-3.2		10	●	DH4	5061638	5,13
A1511-3.3		10	●	DH4	5061640	5,56
A1511-3.4		10	●	DH4	5061642	6,36
A1511-3.5		10	●	DH4	5061644	5,61
A1511-3.6		10	●	DH4	5061646	6,36
A1511-3.7		10	●	DH4	5061648	6,51
A1511-3.8		10	●	DH4	5061650	6,76
A1511-3.9		10	●	DH4	5061652	7,03
A1511-4		10	●	DH4	5061654	6,16
A1511-4.1		10	●	DH4	5061656	7,23
A1511-4.2		10	●	DH4	5061658	6,42
A1511-4.25		10	●	DH4	5061659	15,10
A1511-4.3		10	●	DH4	5061660	7,62
A1511-4.4		10	●	DH4	5061662	7,62
A1511-4.5		10	●	DH4	5061664	6,97
A1511-4.6		10	●	DH4	5061666	7,82
A1511-4.7		10	●	DH4	5061668	8,14
A1511-4.75		10	●	DH4	5061669	16,40
A1511-4.8		10	●	DH4	5061670	8,29
A1511-4.9		10	●	DH4	5061672	8,29
A1511-5		10	●	DH4	5061674	7,78
A1511-5.1		10	●	DH4	5061675	8,38
A1511-5.2		10	●	DH4	5061676	8,46
A1511-5.25		10	●	DH4	5061677	16,97
A1511-5.3		10	●	DH4	5061678	8,63
A1511-5.4		10	●	DH4	5061679	8,74
A1511-5.5		10	●	DH4	5061680	8,84
A1511-5.6		10	●	DH4	5061681	8,94
A1511-5.7		10	●	DH4	5061682	9,01
A1511-5.75		10	●	DH4	5061683	18,25
A1511-5.8		10	●	DH4	5061684	9,07
A1511-5.9		10	●	DH4	5061685	9,34
A1511-6		10	●	DH4	5061686	9,55
A1511-6.1		10	●	DH4	5061687	9,74
A1511-6.2		10	●	DH4	5061688	10,41
A1511-6.3		10	●	DH4	5061690	10,89
A1511-6.4		10	●	DH4	5061691	12,06
A1511-6.5		10	●	DH4	5061692	10,41
A1511-6.6		10	●	DH4	5061693	12,59
A1511-6.7		10	●	DH4	5061694	13,16
A1511-6.75		10	●	DH4	5061695	16,05
A1511-6.8		10	●	DH4	5061696	15,04
A1511-6.9		10	●	DH4	5061697	15,04
A1511-7		10	●	DH4	5061698	12,20
A1511-7.1		5	●	DH4	5061699	15,75
A1511-7.2		5	●	DH4	5061700	16,05
A1511-7.25		5	●	DH4	5061701	21,81

Bezeichnung / Designation	Sorte / Grade	VE / US		Disc. Gr.	Article No.	EURO Stück / piece
A1511-7.3		5	●	DH4	5061702	16,05
A1511-7.4		5	●	DH4	5061703	16,40
A1511-7.5		5	●	DH4	5061704	13,95
A1511-7.6		5	●	DH4	5061705	16,67
A1511-7.7		5	●	DH4	5061706	16,97
A1511-7.8		5	●	DH4	5061708	16,97
A1511-7.9		5	●	DH4	5061709	16,97
A1511-8		5	●	DH4	5061710	14,48
A1511-8.1		5	●	DH4	5061711	17,66
A1511-8.2		5	●	DH4	5061712	18,01
A1511-8.3		5	●	DH4	5061714	18,90
A1511-8.4		5	●	DH4	5061715	19,87
A1511-8.5		5	●	DH4	5061716	16,67
A1511-8.6		5	●	DH4	5061717	20,84
A1511-8.7		5	●	DH4	5061718	22,12
A1511-8.75		5	●	DH4	5061719	27,70
A1511-8.8		5	●	DH4	5061720	23,69
A1511-8.9		5	●	DH4	5061721	24,36
A1511-9		5	●	DH4	5061722	18,25
A1511-9.1		5	●	DH4	5061723	25,00
A1511-9.2		5	●	DH4	5061724	25,00
A1511-9.25		5	●	DH4	5061725	32,40
A1511-9.3		5	●	DH4	5061726	25,00
A1511-9.4		5	●	DH4	5061727	25,00
A1511-9.5		5	●	DH4	5061728	20,30
A1511-9.6		5	●	DH4	5061729	26,30
A1511-9.7		5	●	DH4	5061730	27,60
A1511-9.75		5	●	DH4	5061731	35,40
A1511-9.8		5	●	DH4	5061732	28,30
A1511-9.9		5	●	DH4	5061733	28,30
A1511-10		5	●	DH4	5061578	21,40
A1511-10.1		1	●	DH4	5061579	29,70
A1511-10.2		1	●	DH4	5061580	28,90
A1511-10.3		1	●	DH4	5061581	31,90
A1511-10.4		1	●	DH4	5061582	33,20
A1511-10.5		1	●	DH4	5061583	29,20
A1511-10.7		1	●	DH4	5061585	34,30
A1511-10.8		1	●	DH4	5061586	37,20
A1511-11		1	●	DH4	5061588	30,20
A1511-11.5		1	●	DH4	5061590	34,30
A1511-11.8		1	●	DH4	5061591	49,20
A1511-12		1	●	DH4	5061592	38,60
A1511-12.5		1	●	DH4	5061594	38,60
A1511-13		1	●	DH4	5061596	43,10
A1511-13.5		1	●	DH4	5061598	47,50
A1511-14		1	●	DH4	5061600	51,40
A1511-14.5		1	●	DH4	5061601	55,20
A1511-15		1	●	DH4	5061602	59,10
A1511-15.5		1	●	DH4	5061603	63,00
A1511-16		1	●	DH4	5061604	66,80
A1511-17		1	●	DH4	5061605	74,50
A1511-18		1	●	DH4	5061606	82,30
A1511-19		1	●	DH4	5061607	90,00
A1511-20		1	●	DH4	5061628	97,70
A1511-21		1	●	DH4	5061629	163,00
A1511-22		1	●	DH4	5061630	178,00
A1522-1		10	●	DH8	5061836	12,17
A1522-NO60		10	●	DH8	5154108	13,61
A1522-NO59		10	●	DH8	5154106	13,61
A1522-NO58		10	●	DH8	5154105	13,61
A1522-NO57		10	●	DH8	5154104	13,61
A1522-1.1		10	●	DH8	5061837	13,61
A1522-NO56		10	●	DH8	5154103	13,07
A1522-3/64IN		10	●	DH8	5154117	13,07
A1522-1.2		10	●	DH8	5061838	13,07
A1522-1.3		10	●	DH8	5061839	12,49
A1522-NO55		10	●	DH8	5154102	11,72
A1522-NO54		10	●	DH8	5154101	11,72
A1522-1.4		10	●	DH8	5061840	11,72
A1522-1.5		10	●	DH8	5061841	10,16

Bezeichnung / Designation	Sorte / Grade	VE / US		Disc. Gr.	Article No.	EURO Stück / piece
A1522-NO53		10	●	DH8	5154099	10,32
A1522-1/16IN		10	●	DH8	5154112	10,32
A1522-1.6		10	●	DH8	5061842	10,32
A1522-NO52		10	●	DH8	5154098	9,65
A1522-1.7		10	●	DH8	5061843	9,65
A1522-NO51		10	●	DH8	5154096	9,65
A1522-NO50		10	●	DH8	5154094	9,59
A1522-1.8		10	●	DH8	5061844	9,59
A1522-NO49		10	●	DH8	5154089	9,44
A1522-1.9		10	●	DH8	5061845	9,44
A1522-NO48		10	●	DH8	5154090	9,11
A1522-5/64IN		10	●	DH8	5061917	8,70
A1522-NO47		10	●	DH8	5154091	9,11
A1522-2		10	●	DH8	5061866	9,11
A1522-NO46		10	●	DH8	5154092	10,20
A1522-NO45		10	●	DH8	5154095	10,20
A1522-2.1		10	●	DH8	5061867	10,20
A1522-NO44		10	●	DH8	5154097	10,40
A1522-2.2		10	●	DH8	5061868	10,40
A1522-NO43		10	●	DH8	5154100	10,57
A1522-2.3		10	●	DH8	5061869	10,57
A1522-NO42		10	●	DH8	5154088	10,76
A1522-3/32IN		10	●	DH8	5061892	10,60
A1522-2.4		10	●	DH8	5061870	10,76
A1522-NO41		10	●	DH8	5154087	9,32
A1522-NO40		10	●	DH8	5154085	9,32
A1522-2.5		10	●	DH8	5061871	9,32
A1522-NO39		10	●	DH8	5154082	10,88
A1522-NO38		10	●	DH8	5154081	10,88
A1522-2.6		10	●	DH8	5061872	10,88
A1522-NO37		10	●	DH8	5154080	10,94
A1522-2.7		10	●	DH8	5061873	10,94
A1522-NO36		10	●	DH8	5154079	11,03
A1522-7/64IN		10	●	DH8	5061940	10,40
A1522-NO35		10	●	DH8	5154078	11,03
A1522-2.8		10	●	DH8	5061874	11,03
A1522-NO34		10	●	DH8	5154077	11,11
A1522-NO33		10	●	DH8	5154076	11,11
A1522-2.9		10	●	DH8	5061875	11,11
A1522-NO32		10	●	DH8	5154084	9,44
A1522-3		10	●	DH8	5061881	9,44
A1522-NO31		5	●	DH8	5154086	11,76
A1522-3.1		5	●	DH8	5061882	11,76
A1522-1/8IN		5	●	DH8	5061848	11,03
A1522-3.2		5	●	DH8	5061883	10,73
A1522-NO30		5	●	DH8	5154075	11,60
A1522-3.3		5	●	DH8	5061884	11,60
A1522-3.4		5	●	DH8	5061885	12,88
A1522-NO29		5	●	DH8	5154073	12,01
A1522-3.5		5	●	DH8	5061886	12,01
A1522-NO28		5	●	DH8	5154072	13,22
A1522-9/64IN		5	●	DH8	5061962	14,23
A1522-3.6		5	●	DH8	5061887	13,22
A1522-NO27		5	●	DH8	5154071	13,33
A1522-3.7		5	●	DH8	5061888	13,33
A1522-NO26		5	●	DH8	5154069	13,61
A1522-NO25		5	●	DH8	5154068	13,61
A1522-3.8		5	●	DH8	5061889	13,61
A1522-NO24		5	●	DH8	5155142	13,89
A1522-3.9		5	●	DH8	5061890	13,89
A1522-NO23		5	●	DH8	5155143	12,20
A1522-5/32IN		5	●	DH8	5061916	12,49
A1522-NO22		5	●	DH8	5155144	12,20
A1522-4		5	●	DH8	5061895	12,20
A1522-NO21		5	●	DH8	5155145	14,23
A1522-NO20		5	●	DH8	5155146	14,23
A1522-4.1		5	●	DH8	5061896	14,23
A1522-4.2		5	●	DH8	5061897	13,61
A1522-NO19		5	●	DH8	5155148	15,08
A1522-4.3		5	●	DH8	5061898	15,08

Bezeichnung / Designation	Sorte / Grade	VE / US		Disc. Gr.	Article No.	EURO Stück / piece
A1522-NO18		5	●	DH8	5155130	**15,63**
A1522-11/64IN		5	●	DH8	5061858	**16,48**
A1522-NO17		5	●	DH8	5155131	**15,63**
A1522-4.4		5	●	DH8	5061899	**15,63**
A1522-NO16		5	●	DH8	5155132	**13,89**
A1522-4.5		5	●	DH8	5061900	**13,89**
A1522-NO15		5	●	DH8	5155133	**15,63**
A1522-4.6		5	●	DH8	5061901	**15,63**
A1522-NO14		5	●	DH8	5155134	**15,63**
A1522-NO13		5	●	DH8	5155135	**15,63**
A1522-4.7		5	●	DH8	5061902	**15,63**
A1522-3/16IN		5	●	DH8	5061891	**15,32**
A1522-4.8		5	●	DH8	5061903	**15,63**
A1522-NO11		5	●	DH8	5155137	**16,26**
A1522-4.9		5	●	DH8	5061904	**16,26**
A1522-NO10		5	●	DH8	5155138	**14,50**
A1522-NO9		5	●	DH8	5154111	**14,50**
A1522-5		5	●	DH8	5061905	**14,50**
A1522-NO8		5	●	DH8	5154110	**16,48**
A1522-5.1		5	●	DH8	5061906	**16,48**
A1522-NO7		5	●	DH8	5154109	**17,97**
A1522-13/64IN		5	●	DH8	5061861	**17,30**
A1522-NO6		5	●	DH8	5154107	**17,97**
A1522-5.2		5	●	DH8	5061907	**17,97**
A1522-NO5		5	●	DH8	5154093	**18,25**
A1522-5.3		5	●	DH8	5061908	**18,25**
A1522-NO4		5	●	DH8	5154083	**18,25**
A1522-5.4		5	●	DH8	5061909	**18,50**
A1522-NO3		5	●	DH8	5154074	**17,11**
A1522-5.5		5	●	DH8	5061910	**17,11**
A1522-7/32IN		5	●	DH8	5061939	**19,73**
A1522-5.6		5	●	DH8	5061911	**20,51**
A1522-NO2		5	●	DH8	5155147	**21,06**
A1522-5.7		5	●	DH8	5061912	**21,06**
A1522-NO1		5	●	DH8	5155139	**21,73**
A1522-5.8		5	●	DH8	5061913	**21,73**
A1522-5.9		5	●	DH8	5061914	**22,84**
A1522-15/64IN		5	●	DH8	5061863	**23,73**
A1522-6		5	●	DH8	5061918	**17,97**
A1522-6.1		5	●	DH8	5061919	**24,27**
A1522-6.2		5	●	DH8	5061920	**24,65**
A1522-6.3		5	●	DH8	5061921	**24,92**
A1522-1/4IN		5	●	DH8	5061847	**25,90**
A1522-6.4		5	●	DH8	5061922	**26,80**
A1522-6.5		5	●	DH8	5061923	**19,73**
A1522-6.6		5	●	DH8	5061924	**27,40**
A1522-6.7		5	●	DH8	5061925	**28,80**
A1522-17/64IN		5	●	DH8	5061864	**30,00**
A1522-6.8		5	●	DH8	5061926	**30,50**
A1522-6.9		5	●	DH8	5061927	**31,00**
A1522-7		5	●	DH8	5061928	**23,21**
A1522-7.1		1	●	DH8	5061929	**31,00**
A1522-9/32IN		1	●	DH8	5061961	**31,50**
A1522-7.2		1	●	DH8	5061930	**32,00**
A1522-7.3		1	●	DH8	5061931	**32,70**
A1522-7.4		1	●	DH8	5061932	**32,70**
A1522-7.5		1	●	DH8	5061933	**25,90**
A1522-19/64IN		1	●	DH8	5061865	**33,70**
A1522-7.6		1	●	DH8	5061934	**33,70**
A1522-7.7		1	●	DH8	5061935	**34,20**
A1522-7.8		1	●	DH8	5061936	**34,90**
A1522-7.9		1	●	DH8	5061937	**34,90**
A1522-5/16IN		1	●	DH8	5061915	**34,90**
A1522-8		1	●	DH8	5061941	**27,40**
A1522-8.1		1	●	DH8	5061942	**36,40**
A1522-8.2		1	●	DH8	5061943	**36,90**
A1522-8.3		1	●	DH8	5061944	**36,90**
A1522-21/64IN		1	●	DH8	5061876	**38,30**
A1522-8.4		1	●	DH8	5061945	**38,30**
A1522-8.5		1	●	DH8	5061946	**34,90**

Bezeichnung / Designation	Sorte / Grade	VE / US		Disc. Gr.	Article No.	EURO Stück / piece
A1522-8.6		1	●	DH8	5061947	**39,00**
A1522-8.7		1	●	DH8	5061948	**39,00**
A1522-11/32IN		1	●	DH8	5061857	**39,80**
A1522-8.8		1	●	DH8	5061949	**40,30**
A1522-8.9		1	●	DH8	5061950	**42,00**
A1522-9		1	●	DH8	5061951	**38,10**
A1522-9.1		1	●	DH8	5061952	**43,50**
A1522-23/64IN		1	●	DH8	5061877	**47,60**
A1522-9.2		1	●	DH8	5061953	**47,40**
A1522-9.3		1	●	DH8	5061954	**50,80**
A1522-9.4		1	●	DH8	5061955	**54,70**
A1522-9.5		1	●	DH8	5061956	**39,60**
A1522-3/8IN		1	●	DH8	5061893	**57,60**
A1522-9.6		1	●	DH8	5061957	**60,00**
A1522-9.7		1	●	DH8	5061958	**63,00**
A1522-9.8		1	●	DH8	5061959	**66,90**
A1522-9.9		1	●	DH8	5061960	**70,30**
A1522-25/64IN		1	●	DH8	5061878	**85,90**
A1522-10		1	●	DH8	5061849	**42,50**
A1522-10.2		1	●	DH8	5061850	**69,80**
A1522-13/32IN		1	●	DH8	5061860	**70,30**
A1522-10.5		1	●	DH8	5061851	**67,40**
A1522-27/64IN		1	●	DH8	5061879	**101,00**
A1522-10.8		1	●	DH8	5061852	**102,00**
A1522-11		1	●	DH8	5061853	**69,30**
A1522-7/16IN		1	●	DH8	5061938	**101,00**
A1522-11.2		1	●	DH8	5061854	**117,00**
A1522-11.5		1	●	DH8	5061855	**73,30**
A1522-29/64IN		1	●	DH8	5061880	**101,00**
A1522-11.8		1	●	DH8	5061856	**120,00**
A1522-15/32IN		1	●	DH8	5061862	**102,00**
A1522-12		1	●	DH8	5061859	**77,10**
A1522-31/64IN		1	●	DH8	5061894	**123,00**
A1522-1/2IN		1	●	DH8	5061846	**76,20**
A1522-9/16IN		1	●	DH8	5154123	**131,00**
A1522-37/64IN		1	●	DH8	5154118	**131,00**
A1522-39/64IN		1	●	DH8	5154120	**162,00**
A1522-5/8IN		1	●	DH8	5154121	**162,00**
A1522-21/32IN		1	●	DH8	5154119	**151,00**
A1522-11/16IN		1	●	DH8	5154113	**164,00**
A1522-3/4IN		1	●	DH8	5154116	**224,00**
A1522-25/32IN		1	●	DH8	5154115	**224,00**
A1522-13/16IN		1	●	DH8	5154114	**307,00**
A1522-7/8IN		1	●	DH8	5154122	**376,00**
A1544-1		10	●	DH4	5062051	**15,26**
A1544-1.1		10	●	DH4	5062052	**23,47**
A1544-1.2		10	●	DH4	5062053	**21,83**
A1544-1.3		10	●	DH4	5062054	**21,25**
A1544-1.4		10	●	DH4	5062055	**20,46**
A1544-1.5		10	●	DH4	5062056	**14,59**
A1544-1.6		10	●	DH4	5062057	**19,84**
A1544-1.7		10	●	DH4	5062058	**19,84**
A1544-1.8		10	●	DH4	5062059	**18,89**
A1544-1.9		10	●	DH4	5062060	**18,27**
A1544-2		10	●	DH4	5062070	**11,74**
A1544-2.1		10	●	DH4	5062071	**17,01**
A1544-2.2		10	●	DH4	5062072	**17,01**
A1544-2.3		10	●	DH4	5062073	**17,01**
A1544-2.4		10	●	DH4	5062074	**17,53**
A1544-2.5		10	●	DH4	5062075	**12,32**
A1544-2.6		10	●	DH4	5062076	**17,53**
A1544-2.7		10	●	DH4	5062077	**17,88**
A1544-2.8		10	●	DH4	5062078	**17,88**
A1544-2.9		10	●	DH4	5062079	**17,88**
A1544-3		10	●	DH4	5062080	**12,93**
A1544-3.1		5	●	DH4	5062081	**17,88**
A1544-3.2		5	●	DH4	5062082	**13,66**
A1544-3.3		5	●	DH4	5062083	**14,31**
A1544-3.4		5	●	DH4	5062084	**17,99**
A1544-3.5		5	●	DH4	5062085	**15,00**

Bezeichnung / Designation	Sorte / Grade	VE / US		Disc. Gr.	Article No.	EURO Stück / piece
A1544-3.6		5	●	DH4	5062086	**18,11**
A1544-3.7		5	●	DH4	5062087	**18,14**
A1544-3.8		5	●	DH4	5062088	**18,21**
A1544-3.9		5	●	DH4	5062089	**18,27**
A1544-4		5	●	DH4	5062090	**15,93**
A1544-4.1		5	●	DH4	5062091	**18,27**
A1544-4.2		5	●	DH4	5062092	**17,53**
A1544-4.3		5	●	DH4	5062093	**18,27**
A1544-4.4		5	●	DH4	5062094	**18,64**
A1544-4.5		5	●	DH4	5062095	**17,88**
A1544-4.6		5	●	DH4	5062096	**18,64**
A1544-4.7		5	●	DH4	5062097	**18,89**
A1544-4.8		5	●	DH4	5062098	**18,89**
A1544-4.9		5	●	DH4	5062099	**19,84**
A1544-5		5	●	DH4	5062100	**18,27**
A1544-5.1		5	●	DH4	5062101	**20,57**
A1544-5.2		5	●	DH4	5062102	**22,91**
A1544-5.3		5	●	DH4	5062103	**23,89**
A1544-5.4		5	●	DH4	5062104	**25,90**
A1544-5.5		5	●	DH4	5062105	**20,57**
A1544-5.6		5	●	DH4	5062106	**26,60**
A1544-5.7		5	●	DH4	5062107	**26,60**
A1544-5.8		5	●	DH4	5062108	**27,80**
A1544-5.9		5	●	DH4	5062109	**28,50**
A1544-6		5	●	DH4	5062110	**23,47**
A1544-6.1		5	●	DH4	5062111	**29,90**
A1544-6.2		5	●	DH4	5062112	**30,80**
A1544-6.3		5	●	DH4	5062113	**31,30**
A1544-6.4		5	●	DH4	5062114	**33,00**
A1544-6.5		5	●	DH4	5062115	**25,10**
A1544-6.6		5	●	DH4	5062116	**33,60**
A1544-6.7		5	●	DH4	5062117	**34,40**
A1544-6.8		5	●	DH4	5062118	**34,90**
A1544-6.9		5	●	DH4	5062119	**35,50**
A1544-7		5	●	DH4	5062120	**29,40**
A1544-7.1		1	●	DH4	5062121	**35,50**
A1544-7.2		1	●	DH4	5062122	**37,50**
A1544-7.3		1	●	DH4	5062123	**38,60**
A1544-7.4		1	●	DH4	5062124	**40,00**
A1544-7.5		1	●	DH4	5062125	**33,00**
A1544-7.6		1	●	DH4	5062126	**41,60**
A1544-7.7		1	●	DH4	5062127	**43,90**
A1544-7.8		1	●	DH4	5062128	**44,70**
A1544-7.9		1	●	DH4	5062129	**45,60**
A1544-8		1	●	DH4	5062130	**33,60**
A1544-8.1		1	●	DH4	5062131	**47,30**
A1544-8.2		1	●	DH4	5062132	**48,10**
A1544-8.3		1	●	DH4	5062133	**48,60**
A1544-8.4		1	●	DH4	5062134	**50,40**
A1544-8.5		1	●	DH4	5062135	**40,00**
A1544-8.6		1	●	DH4	5062136	**51,50**
A1544-8.7		1	●	DH4	5062137	**53,70**
A1544-8.8		1	●	DH4	5062138	**55,90**
A1544-8.9		1	●	DH4	5062139	**57,00**
A1544-9		1	●	DH4	5062140	**43,90**
A1544-9.1		1	●	DH4	5062141	**61,50**
A1544-9.2		1	●	DH4	5062142	**64,90**
A1544-9.3		1	●	DH4	5062143	**69,40**
A1544-9.4		1	●	DH4	5062144	**74,90**
A1544-9.5		1	●	DH4	5062145	**52,30**
A1544-9.6		1	●	DH4	5062146	**80,60**
A1544-9.7		1	●	DH4	5062147	**82,80**
A1544-9.8		1	●	DH4	5062148	**85,00**
A1544-9.9		1	●	DH4	5062149	**90,60**
A1544-10		1	●	DH4	5062061	**65,50**
A1544-10.2		1	●	DH4	5062062	**76,60**
A1544-10.5		1	●	DH4	5062063	**83,90**
A1544-10.8		1	●	DH4	5062064	**99,60**
A1544-11		1	●	DH4	5062065	**97,30**
A1544-11.2		1	●	DH4	5062066	**112,00**

Bezeichnung / Designation	Sorte / Grade	VE / US		Disc. Gr.	Article No.	EURO Stück / piece
A1544-11.5		1	●	DH4	5062067	**111,00**
A1544-11.8		1	●	DH4	5062068	**120,00**
A1544-12		1	●	DH4	5062069	**120,00**
A1547-1		10	●	DH4	5062150	**15,26**
A1547-NO60		10	○	DH4	5154165	**23,47**
A1547-NO59		10	●	DH4	5154153	**23,47**
A1547-NO58		10	○	DH4	5154152	**23,47**
A1547-NO57		10	■	DH4	5154151*	**23,47**
A1547-1.1		10	●	DH4	5062151	**23,47**
A1547-NO56		10	○	DH4	5154150	**21,83**
A1547-3/64IN		10	●	DH4	5154174	**21,83**
A1547-1.2		10	●	DH4	5062152	**21,83**
A1547-1.3		10	●	DH4	5062153	**21,25**
A1547-NO55		10	●	DH4	5154148	**20,46**
A1547-1.4		10	●	DH4	5062154	**20,46**
A1547-1.5		10	●	DH4	5062155	**14,59**
A1547-NO53		10	●	DH4	5154146	**19,84**
A1547-1/16IN		10	●	DH4	5154163	**19,84**
A1547-1.6		10	●	DH4	5062156	**19,84**
A1547-NO52		10	●	DH4	5154145	**19,84**
A1547-1.7		10	●	DH4	5062157	**19,84**
A1547-NO51		10	○	DH4	5154144	**18,89**
A1547-NO50		10	○	DH4	5154143	**18,89**
A1547-1.8		10	●	DH4	5062158	**18,89**
A1547-NO49		10	○	DH4	5154142	**18,27**
A1547-1.9		10	●	DH4	5062159	**18,27**
A1547-NO48		10	●	DH4	5154141	**13,38**
A1547-5/64IN		10	●	DH4	5154179	**13,38**
A1547-NO47		10	●	DH4	5154149	**13,38**
A1547-2		10	●	DH4	5062166	**11,74**
A1547-NO46		10	●	DH4	5154140	**17,01**
A1547-NO45		10	●	DH4	5154134	**17,01**
A1547-2.1		10	●	DH4	5062167	**17,01**
A1547-NO44		10	●	DH4	5154131	**17,01**
A1547-2.2		10	●	DH4	5062168	**17,01**
A1547-NO43		10	●	DH4	5154129	**17,01**
A1547-2.3		10	●	DH4	5062169	**17,01**
A1547-NO42		10	●	DH4	5154128	**17,01**
A1547-3/32IN		10	●	DH4	5154173	**17,01**
A1547-2.4		10	●	DH4	5062170	**17,53**
A1547-NO41		10	●	DH4	5154130	**17,53**
A1547-NO40		10	○	DH4	5154132	**17,53**
A1547-2.5		10	●	DH4	5062171	**12,32**
A1547-NO38		10	●	DH4	5154137	**17,53**
A1547-2.6		10	●	DH4	5062172	**17,53**
A1547-NO37		10	○	DH4	5154138	**17,53**
A1547-2.7		10	●	DH4	5062173	**17,88**
A1547-7/64IN		10	●	DH4	5154182	**17,88**
A1547-NO35		10	■	DH4	5154133*	**17,88**
A1547-2.8		10	●	DH4	5062174	**17,88**
A1547-NO33		10	○	DH4	5154127	**17,88**
A1547-2.9		10	●	DH4	5062175	**17,88**
A1547-NO32		10	○	DH4	5154126	**17,88**
A1547-3		10	●	DH4	5062176	**12,93**
A1547-NO31		5	●	DH4	5154125	**17,88**
A1547-3.1		5	●	DH4	5062177	**17,88**
A1547-1/8IN		5	●	DH4	5154156	**17,88**
A1547-3.2		5	●	DH4	5062178	**13,66**
A1547-NO30		5	●	DH4	5154124	**14,31**
A1547-3.3		5	●	DH4	5062179	**14,31**
A1547-3.4		5	●	DH4	5062180	**17,99**
A1547-3.5		5	●	DH4	5062181	**15,00**
A1547-9/64IN		5	●	DH4	5155294	**18,11**
A1547-3.6		5	●	DH4	5062182	**18,11**
A1547-3.7		5	●	DH4	5062183	**18,14**
A1547-3.8		5	●	DH4	5062184	**18,21**
A1547-3.9		5	●	DH4	5062185	**18,27**
A1547-5/32IN		5	●	DH4	5154178	**15,93**
A1547-4		5	●	DH4	5062186	**15,93**
A1547-4.1		5	●	DH4	5062187	**18,27**

Bezeichnung / Designation	Sorte / Grade	VE / US		Disc. Gr.	Article No.	EURO Stück / piece
A1547-4.2		5	●	DH4	5062188	17,53
A1547-4.3		5	●	DH4	5062189	18,27
A1547-11/64IN		5	■	DH4	5154158*	18,64
A1547-4.4		5	○	DH4	5062190	18,64
A1547-4.5		5	●	DH4	5062191	17,88
A1547-4.6		5	○	DH4	5062192	18,64
A1547-4.7		5	●	DH4	5062193	18,89
A1547-3/16IN		5	●	DH4	5154172	18,89
A1547-4.8		5	●	DH4	5062194	18,89
A1547-4.9		5	●	DH4	5062195	19,84
A1547-5		5	●	DH4	5062196	18,27
A1547-5.1		5	●	DH4	5062197	20,57
A1547-13/64IN		5	○	DH4	5154160	22,91
A1547-5.2		5	●	DH4	5062198	22,91
A1547-5.4		5	●	DH4	5062200	25,90
A1547-5.5		5	●	DH4	5062201	20,57
A1547-7/32IN		5	●	DH4	5154181	26,60
A1547-5.6		5	●	DH4	5062202	26,60
A1547-5.7		5	●	DH4	5062203	26,60
A1547-5.8		5	●	DH4	5062204	27,80
A1547-5.9		5	●	DH4	5062205	28,50
A1547-15/64IN		5	○	DH4	5154162	23,47
A1547-6		5	●	DH4	5062206	23,47
A1547-6.1		5	●	DH4	5062207	29,90
A1547-6.2		5	●	DH4	5062208	30,80
A1547-6.3		5	●	DH4	5062209	31,30
A1547-1/4IN		5	●	DH4	5154155	33,00
A1547-6.4		5	●	DH4	5062210	33,00
A1547-6.5		5	●	DH4	5062211	25,10
A1547-6.6		5	○	DH4	5062212	33,60
A1547-6.7		5	○	DH4	5062213	34,40
A1547-17/64IN		5	●	DH4	5154164	34,90
A1547-6.8		5	●	DH4	5062214	34,90
A1547-7		5	●	DH4	5062215	29,40
A1547-9/32IN		1	○	DH4	5155295	37,50
A1547-7.2		1	■	DH4	5062217*	37,50
A1547-7.4		1	■	DH4	5062219*	40,00
A1547-7.5		1	●	DH4	5062220	33,00
A1547-7.6		1	■	DH4	5062221*	41,60
A1547-7.7		1	●	DH4	5062222	43,90
A1547-7.8		1	●	DH4	5062223	44,70
A1547-7.9		1	○	DH4	5062224	45,60
A1547-5/16IN		1	●	DH4	5154177	33,60
A1547-8		1	●	DH4	5062225	33,60
A1547-8.1		1	●	DH4	5062226	47,30
A1547-8.2		1	○	DH4	5062227	48,10
A1547-8.3		1	○	DH4	5062228	48,60
A1547-21/64IN		1	■	DH4	5154167*	50,40
A1547-8.5		1	●	DH4	5062230	40,00
A1547-8.6		1	○	DH4	5062231	51,50
A1547-8.7		1	●	DH4	5062232	53,70
A1547-11/32IN		1	●	DH4	5154157	55,90
A1547-8.8		1	○	DH4	5062233	55,90
A1547-9		1	●	DH4	5062235	43,90
A1547-23/64IN		1	●	DH4	5154168	65,50
A1547-3/8IN		1	●	DH4	5154175	65,50
A1547-25/64IN		1	○	DH4	5154169	65,50
A1547-10		1	●	DH4	5062160	65,50
A1547-10.2		1	●	DH4	5062161	76,60
A1547-13/32IN		1	○	DH4	5154159	83,90
A1547-10.5		1	●	DH4	5062162	83,90
A1547-27/64IN		1	○	DH4	5154170	97,30
A1547-11		1	●	DH4	5062163	97,30
A1547-7/16IN		1	●	DH4	5154180	111,00
A1547-11.5		1	●	DH4	5062164	111,00
A1547-15/32IN		1	○	DH4	5154161	120,00
A1547-12		1	●	DH4	5062165	120,00
A1547-31/64IN		1	●	DH4	5154176	175,00
A1547-1/2IN		1	○	DH4	5154154	219,00
A1549TFP-1	TFP	1	●	DH8	5960848	37,70

Bezeichnung / Designation	Sorte / Grade	VE / US		Disc. Gr.	Article No.	EURO Stück / piece
A1549TFP-1.1	TFP	1	●	DH8	5960849	38,80
A1549TFP-1.2	TFP	1	●	DH8	5960860	37,70
A1549TFP-1.3	TFP	1	●	DH8	5960861	37,20
A1549TFP-1.4	TFP	1	●	DH8	5960862	36,90
A1549TFP-1.5	TFP	1	●	DH8	5960863	35,30
A1549TFP-1.6	TFP	1	●	DH8	5960864	36,60
A1549TFP-1.7	TFP	1	●	DH8	5960865	35,90
A1549TFP-1.8	TFP	1	●	DH8	5960866	35,30
A1549TFP-1.9	TFP	1	●	DH8	5960867	34,80
A1549TFP-2	TFP	1	●	DH8	5960874	33,10
A1549TFP-2.1	TFP	1	●	DH8	5960875	34,20
A1549TFP-2.2	TFP	1	●	DH8	5960876	34,20
A1549TFP-2.3	TFP	1	●	DH8	5960877	34,20
A1549TFP-2.4	TFP	1	●	DH8	5960878	34,80
A1549TFP-2.5	TFP	1	●	DH8	5960879	33,10
A1549TFP-2.6	TFP	1	●	DH8	5960880	34,80
A1549TFP-2.7	TFP	1	●	DH8	5960881	36,10
A1549TFP-2.8	TFP	1	●	DH8	5960882	37,20
A1549TFP-2.9	TFP	1	●	DH8	5960883	37,20
A1549TFP-3	TFP	1	●	DH8	5960884	34,20
A1549TFP-3.1	TFP	1	●	DH8	5960885	38,50
A1549TFP-3.2	TFP	1	●	DH8	5960886	34,60
A1549TFP-3.3	TFP	1	●	DH8	5960887	35,00
A1549TFP-3.4	TFP	1	●	DH8	5960888	39,60
A1549TFP-3.5	TFP	1	●	DH8	5960889	35,50
A1549TFP-3.6	TFP	1	●	DH8	5960890	40,20
A1549TFP-3.7	TFP	1	●	DH8	5960891	41,30
A1549TFP-3.8	TFP	1	●	DH8	5960892	41,80
A1549TFP-3.9	TFP	1	●	DH8	5960893	42,60
A1549TFP-4	TFP	1	●	DH8	5960894	37,20
A1549TFP-4.1	TFP	1	●	DH8	5960895	43,20
A1549TFP-4.2	TFP	1	●	DH8	5960896	40,20
A1549TFP-4.3	TFP	1	●	DH8	5960897	44,00
A1549TFP-4.4	TFP	1	●	DH8	5960898	44,00
A1549TFP-4.5	TFP	1	●	DH8	5960899	41,30
A1549TFP-4.6	TFP	1	●	DH8	5960900	44,00
A1549TFP-4.7	TFP	1	●	DH8	5960901	44,00
A1549TFP-4.8	TFP	1	●	DH8	5960902	44,00
A1549TFP-4.9	TFP	1	●	DH8	5960903	45,50
A1549TFP-5	TFP	1	●	DH8	5960904	42,30
A1549TFP-5.1	TFP	1	●	DH8	5960905	45,50
A1549TFP-5.2	TFP	1	●	DH8	5960906	45,50
A1549TFP-5.3	TFP	1	●	DH8	5960907	45,50
A1549TFP-5.4	TFP	1	●	DH8	5960908	46,10
A1549TFP-5.5	TFP	1	●	DH8	5960909	46,40
A1549TFP-5.6	TFP	1	●	DH8	5960910	47,00
A1549TFP-5.7	TFP	1	●	DH8	5960911	47,40
A1549TFP-5.8	TFP	1	●	DH8	5960912	48,50
A1549TFP-5.9	TFP	1	●	DH8	5960913	50,40
A1549TFP-6	TFP	1	●	DH8	5960914	50,90
A1549TFP-6.1	TFP	1	●	DH8	5960915	65,80
A1549TFP-6.2	TFP	1	●	DH8	5960916	67,40
A1549TFP-6.3	TFP	1	●	DH8	5960917	70,10
A1549TFP-6.4	TFP	1	●	DH8	5960918	70,70
A1549TFP-6.5	TFP	1	●	DH8	5960919	63,60
A1549TFP-6.6	TFP	1	●	DH8	5960920	74,40
A1549TFP-6.7	TFP	1	●	DH8	5960921	74,40
A1549TFP-6.8	TFP	1	●	DH8	5960922	79,30
A1549TFP-6.9	TFP	1	●	DH8	5960923	79,80
A1549TFP-7	TFP	1	●	DH8	5960924	73,30
A1549TFP-7.1	TFP	1	●	DH8	5960925	82,00
A1549TFP-7.2	TFP	1	●	DH8	5960926	86,30
A1549TFP-7.3	TFP	1	●	DH8	5960927	90,60
A1549TFP-7.4	TFP	1	●	DH8	5960928	90,60
A1549TFP-7.5	TFP	1	●	DH8	5960929	81,40
A1549TFP-7.6	TFP	1	●	DH8	5960930	92,20
A1549TFP-7.7	TFP	1	●	DH8	5960931	94,90
A1549TFP-7.8	TFP	1	●	DH8	5960932	97,60
A1549TFP-7.9	TFP	1	●	DH8	5960933	100,00
A1549TFP-8	TFP	1	●	DH8	5960934	84,10

Bezeichnung / Designation	Sorte / Grade	VE / US		Disc. Gr.	Article No.	EURO Stück / piece
A1549TFP-8.1	TFP	1	●	DH8	5960935	**104,00**
A1549TFP-8.2	TFP	1	●	DH8	5960936	**107,00**
A1549TFP-8.3	TFP	1	●	DH8	5960937	**114,00**
A1549TFP-8.4	TFP	1	●	DH8	5960938	**120,00**
A1549TFP-8.5	TFP	1	●	DH8	5960939	**90,60**
A1549TFP-8.6	TFP	1	●	DH8	5960940	**124,00**
A1549TFP-8.7	TFP	1	●	DH8	5960941	**125,00**
A1549TFP-8.8	TFP	1	●	DH8	5960942	**125,00**
A1549TFP-8.9	TFP	1	●	DH8	5960943	**129,00**
A1549TFP-9	TFP	1	●	DH8	5960944	**94,40**
A1549TFP-9.1	TFP	1	●	DH8	5960945	**129,00**
A1549TFP-9.3	TFP	1	●	DH8	5960947	**134,00**
A1549TFP-9.4	TFP	1	●	DH8	5960948	**134,00**
A1549TFP-9.5	TFP	1	●	DH8	5960949	**107,00**
A1549TFP-9.6	TFP	1	●	DH8	5960950	**141,00**
A1549TFP-9.7	TFP	1	●	DH8	5960951	**147,00**
A1549TFP-9.8	TFP	1	●	DH8	5960952	**151,00**
A1549TFP-9.9	TFP	1	●	DH8	5960953	**151,00**
A1549TFP-10	TFP	1	●	DH8	5960868	**108,00**
A1549TFP-10.2	TFP	1	●	DH8	5960869	**151,00**
A1549TFP-10.5	TFP	1	●	DH8	5960870	**141,00**
A1549TFP-11	TFP	1	●	DH8	5960871	**150,00**
A1549TFP-11.5	TFP	1	●	DH8	5960872	**162,00**
A1549TFP-12	TFP	1	●	DH8	5960873	**181,00**
A155.7.063.050.22.HSK		1	●	076	5007091	**236,00**
A155.7.063.060.27.HSK		1	●	076	5007092	**266,00**
A155.7.063.060.32.HSK		1	●	076	5007093	**266,00**
A155.7.063.100.22.HSK		1	●	076	5007288	**260,00**
A155.7.063.100.27.HSK		1	●	076	5007289	**292,00**
A155.7.063.100.32.HSK		1	●	076	5007290	**292,00**
A155.7.100.050.22.HSK		1	●	076	5007095	**295,00**
A155.7.100.050.27.HSK		1	●	076	5007096	**332,00**
A155.7.100.050.32.HSK		1	●	076	5007097	**332,00**
A155.7.100.060.40.HSK		1	●	076	5007098	**369,00**
A155.7.100.075.60.HSK		1	●	076	5007099	**487,00**
A155.7.100.100.22.HSK		1	●	076	5007300	**325,00**
A155.7.100.100.27.HSK		1	●	076	5007301	**365,00**
A155.7.100.100.32.HSK		1	●	076	5007302	**365,00**
A155.7.100.100.40.HSK		1	●	076	5007303	**406,00**
A155.7.100.160.60.HSK		1	●	076	5007304	**531,00**
A155.BT40.035.16		1	●	076	6257735	**144,00**
A155.BT40.035.22		1	●	076	6257736	**153,00**
A155.BT40.035.27		1	●	076	6257737	**173,00**
A155.BT40.065.32		1	●	076	6257738	**173,00**
A155.BT40.100.16		1	●	076	6257802	**158,00**
A155.BT40.100.22		1	●	076	6257808	**169,00**
A155.BT40.100.27		1	●	076	6257809	**190,00**
A155.BT50.055.22		1	●	076	6257770	**212,00**
A155.BT50.055.27		1	●	076	6257771	**239,00**
A155.BT50.055.32		1	●	076	6257773	**239,00**
A155.BT50.055.40		1	●	076	6257774	**266,00**
A155.BT50.080.60		1	●	076	6257775	**319,00**
A155.BT50.100.22		1	●	076	6257821	**234,00**
A155.BT50.100.27		1	●	076	6257823	**263,00**
A155.BT50.100.32		1	●	076	6257825	**263,00**
A155.S50.035.32		1	●	076	6257732	**239,00**
A155.S50.050.40		1	●	076	6257733	**266,00**
A155.S50.070.60		1	●	076	6257734	**319,00**
A155.S50.100.22		1	●	076	6257820	**234,00**
A155.S50.100.27		1	●	076	6257822	**263,00**
A155.S50.100.32		1	●	076	6257824	**263,00**
A155.S50.100.40		1	●	076	6257826	**292,00**
A155M.0.63.030.22		1	●	070	5007387	**320,00**
A155M.0.63.030.27		1	●	070	5007388	**330,00**
A155M.0.63.030.32		1	●	070	5007389	**350,00**
A155M.0.80.030.22		1	●	070	5007391	**351,00**
A155M.0.80.030.27		1	●	070	5007392	**356,00**
A155M.0.80.030.32		1	●	070	5007393	**364,00**
A155M.0.80.040.40		1	●	070	5007394	**446,00**
A155M.0.80.065.60		1	●	070	5007487	**410,00**

Bezeichnung / Designation	Sorte / Grade	VE / US		Disc. Gr.	Article No.	EURO Stück / piece
A1622-2		1	●	DH8	5062555	**17,49**
A1622-2.1		1	●	DH8	5062556	**21,74**
A1622-2.2		1	●	DH8	5062557	**21,74**
A1622-2.3		1	●	DH8	5062558	**21,74**
A1622-3/32IN		1	●	DH8	5062581	**22,99**
A1622-2.4		1	●	DH8	5062559	**22,69**
A1622-N040		1	●	DH8	5062533	**18,11**
A1622-2.5		1	●	DH8	5062560	**17,49**
A1622-N039		1	●	DH8	5062531	**31,80**
A1622-N038		1	●	DH8	5062530	**31,80**
A1622-2.6		1	●	DH8	5062561	**22,69**
A1622-N037		1	●	DH8	5062529	**24,55**
A1622-2.7		1	●	DH8	5062562	**24,23**
A1622-N036		1	●	DH8	5062528	**25,50**
A1622-7/64IN		1	●	DH8	5062628	**25,50**
A1622-N035		1	●	DH8	5062527	**24,55**
A1622-2.8		1	●	DH8	5062563	**24,23**
A1622-N034		1	●	DH8	5062526	**26,40**
A1622-N033		1	●	DH8	5062525	**35,70**
A1622-2.9		1	●	DH8	5062564	**24,23**
A1622-N032		1	●	DH8	5062524	**35,70**
A1622-3		1	●	DH8	5062570	**20,22**
A1622-N031		1	●	DH8	5062523	**35,70**
A1622-3.1		1	●	DH8	5062571	**25,20**
A1622-1/8IN		1	●	DH8	5062541	**26,40**
A1622-3.2		1	●	DH8	5062572	**22,25**
A1622-N030		1	●	DH8	5062522	**26,40**
A1622-3.3		1	●	DH8	5062573	**22,76**
A1622-3.4		1	●	DH8	5062574	**25,50**
A1622-N029		1	●	DH8	5062520	**21,47**
A1622-3.5		1	●	DH8	5062575	**20,22**
A1622-N028		1	●	DH8	5062519	**37,00**
A1622-9/64IN		1	●	DH8	5062650	**37,00**
A1622-3.6		1	●	DH8	5062576	**25,50**
A1622-N027		1	●	DH8	5062518	**28,50**
A1622-3.7		1	●	DH8	5062577	**27,70**
A1622-N026		1	●	DH8	5062517	**29,00**
A1622-N025		1	●	DH8	5062516	**27,70**
A1622-3.8		1	●	DH8	5062578	**27,70**
A1622-N024		1	●	DH8	5062515	**42,20**
A1622-3.9		1	●	DH8	5062579	**27,70**
A1622-N023		1	●	DH8	5062514	**29,00**
A1622-5/32IN		1	●	DH8	5062605	**22,69**
A1622-N022		1	●	DH8	5062513	**23,32**
A1622-4		1	●	DH8	5062584	**20,60**
A1622-N021		1	●	DH8	5062512	**29,00**
A1622-N020		1	●	DH8	5062511	**29,00**
A1622-4.1		1	●	DH8	5062585	**27,70**
A1622-4.2		1	●	DH8	5062586	**20,71**
A1622-N019		1	●	DH8	5062509	**32,80**
A1622-4.3		1	●	DH8	5062587	**31,80**
A1622-N018		1	●	DH8	5062508	**32,80**
A1622-11/64IN		1	●	DH8	5062547	**32,30**
A1622-N017		1	●	DH8	5062507	**32,80**
A1622-4.4		1	●	DH8	5062588	**31,80**
A1622-N016		1	●	DH8	5062506	**22,07**
A1622-4.5		1	●	DH8	5062589	**22,07**
A1622-N015		1	●	DH8	5062505	**37,00**
A1622-4.6		1	●	DH8	5062590	**31,80**
A1622-N014		1	●	DH8	5062504	**33,40**
A1622-N013		1	●	DH8	5062503	**32,30**
A1622-4.7		1	●	DH8	5062591	**32,30**
A1622-3/16IN		1	●	DH8	5062580	**32,80**
A1622-4.8		1	●	DH8	5062592	**32,80**
A1622-N012		1	●	DH8	5062502	**32,80**
A1622-N011		1	●	DH8	5062501	**35,70**
A1622-4.9		1	●	DH8	5062593	**33,90**
A1622-N010		1	●	DH8	5062500	**25,20**
A1622-N9		1	●	DH8	5062538	**25,20**
A1622-5		1	●	DH8	5062594	**23,32**

Bezeichnung / Designation	Sorte / Grade	VE / US		Disc. Gr.	Article No.	EURO Stück / piece
A1622-NO8		1	●	DH8	5062537	**37,00**
A1622-5.1		1	●	DH8	5062595	**35,70**
A1622-NO7		1	●	DH8	5062536	**49,40**
A1622-13/64IN		1	●	DH8	5062550	**43,70**
A1622-NO6		1	●	DH8	5062535	**38,50**
A1622-5.2		1	●	DH8	5062596	**36,20**
A1622-NO5		1	●	DH8	5062534	**38,50**
A1622-5.3		1	●	DH8	5062597	**36,20**
A1622-NO4		1	●	DH8	5062532	**38,50**
A1622-5.4		1	●	DH8	5062598	**36,20**
A1622-NO3		1	●	DH8	5062521	**27,70**
A1622-5.5		1	●	DH8	5062599	**25,70**
A1622-7/32IN		1	●	DH8	5062627	**46,10**
A1622-5.6		1	●	DH8	5062600	**36,20**
A1622-NO2		1	●	DH8	5062510	**39,00**
A1622-5.7		1	●	DH8	5062601	**37,00**
A1622-NO1		1	●	DH8	5062499	**39,60**
A1622-5.8		1	●	DH8	5062602	**38,50**
A1622-5.9		1	●	DH8	5062603	**38,50**
A1622-15/64IN		1	●	DH8	5062552	**39,00**
A1622-6		1	●	DH8	5062606	**25,70**
A1622-6.1		1	●	DH8	5062607	**40,60**
A1622-6.2		1	●	DH8	5062608	**40,10**
A1622-6.3		1	●	DH8	5062609	**42,70**
A1622-1/4IN		1	●	DH8	5062540	**42,20**
A1622-6.4		1	●	DH8	5062610	**43,70**
A1622-6.5		1	●	DH8	5062611	**35,70**
A1622-6.6		1	●	DH8	5062612	**43,70**
A1622-6.7		1	●	DH8	5062613	**46,10**
A1622-17/64IN		1	●	DH8	5062553	**69,90**
A1622-6.8		1	●	DH8	5062614	**45,50**
A1622-6.9		1	●	DH8	5062615	**48,40**
A1622-7		1	●	DH8	5062616	**37,00**
A1622-7.1		1	●	DH8	5062617	**53,80**
A1622-9/32IN		1	●	DH8	5062649	**54,30**
A1622-7.2		1	●	DH8	5062618	**53,80**
A1622-7.3		1	●	DH8	5062619	**53,80**
A1622-7.4		1	●	DH8	5062620	**53,80**
A1622-7.5		1	●	DH8	5062621	**42,20**
A1622-19/64IN		1	●	DH8	5062554	**67,30**
A1622-7.6		1	●	DH8	5062622	**55,80**
A1622-7.7		1	●	DH8	5062623	**58,00**
A1622-7.8		1	●	DH8	5062624	**61,10**
A1622-7.9		1	●	DH8	5062625	**63,20**
A1622-5/16IN		1	●	DH8	5062604	**61,10**
A1622-8		1	●	DH8	5062629	**45,50**
A1622-8.1		1	●	DH8	5062630	**71,40**
A1622-8.2		1	●	DH8	5062631	**71,40**
A1622-8.3		1	●	DH8	5062632	**71,40**
A1622-21/64IN		1	●	DH8	5062565	**74,00**
A1622-8.4		1	●	DH8	5062633	**74,50**
A1622-8.5		1	●	DH8	5062634	**60,00**
A1622-8.6		1	●	DH8	5062635	**76,60**
A1622-8.7		1	●	DH8	5062636	**80,20**
A1622-11/32IN		1	●	DH8	5062546	**82,80**
A1622-8.8		1	●	DH8	5062637	**83,80**
A1622-8.9		1	●	DH8	5062638	**85,90**
A1622-9		1	●	DH8	5062639	**64,20**
A1622-9.1		1	●	DH8	5062640	**90,00**
A1622-23/64IN		1	●	DH8	5062566	**117,00**
A1622-9.2		1	●	DH8	5062641	**94,70**
A1622-9.3		1	●	DH8	5062642	**97,80**
A1622-9.4		1	●	DH8	5062643	**100,00**
A1622-9.5		1	●	DH8	5062644	**73,50**
A1622-3/8IN		1	●	DH8	5062582	**80,70**
A1622-9.6		1	●	DH8	5062645	**103,00**
A1622-9.7		1	●	DH8	5062646	**103,00**
A1622-9.8		1	●	DH8	5062647	**106,00**
A1622-9.9		1	●	DH8	5062648	**109,00**
A1622-25/64IN		1	●	DH8	5062567	**169,00**

Bezeichnung / Designation	Sorte / Grade	VE / US		Disc. Gr.	Article No.	EURO Stück / piece
A1622-10		1	●	DH8	5062542	**76,00**
A1622-13/32IN		1	●	DH8	5062549	**117,00**
A1622-10.5		1	●	DH8	5062543	**103,00**
A1622-27/64IN		1	●	DH8	5062568	**147,00**
A1622-11		1	●	DH8	5062544	**86,90**
A1622-7/16IN		1	●	DH8	5062626	**102,00**
A1622-11.5		1	●	DH8	5062545	**108,00**
A1622-29/64IN		1	●	DH8	5062569	**166,00**
A1622-15/32IN		1	●	DH8	5062551	**166,00**
A1622-12		1	●	DH8	5062548	**99,40**
A1622-31/64IN		1	●	DH8	5062583	**168,00**
A1622-1/2IN		1	●	DH8	5062539	**161,00**
A16R-PCLNL09		1	●	060	6047185	**126,00**
A16R-PCLNR09		1	●	060	6047203	**126,00**
A16R-PTFNL11		1	●	060	6047305	**126,00**
A16R-PTFNR11		1	●	060	6047309	**126,00**
A16R-SCLCL09		1	●	060	5194486	**126,00**
A16R-SCLCL09-R		1	●	060	5204650	**126,00**
A16R-SCLCR09		1	●	060	5194487	**126,00**
A16R-SCLCR09-R		1	●	060	5204651	**126,00**
A16R-SDJCL07		1	●	060	7807877	**126,00**
A16R-SDJCR07		1	●	060	7807878	**126,00**
A16R-SDQCL07		1	●	060	5204658	**126,00**
A16R-SDQCL07-R		1	●	060	5204660	**126,00**
A16R-SDQCR07		1	●	060	5204659	**126,00**
A16R-SDQCR07-R		1	●	060	5204661	**126,00**
A16R-SDUCL07		1	●	060	5194508	**126,00**
A16R-SDUCL07-R		1	●	060	5204670	**126,00**
A16R-SDUCL07-X		1	●	060	5673606	**126,00**
A16R-SDUCR07		1	●	060	5194509	**126,00**
A16R-SDUCR07-R		1	●	060	5204671	**126,00**
A16R-SDUCR07-X		1	●	060	5673607	**126,00**
A16R-SDXCL07		1	●	060	7394689	**126,00**
A16R-SDXCR07		1	●	060	7394690	**126,00**
A16R-SSKCL09		1	●	060	5194514	**126,00**
A16R-SSKCR09		1	●	060	5194515	**126,00**
A16R-STFCL11		1	●	060	5204682	**126,00**
A16R-STFCL11-R		1	●	060	5204684	**126,00**
A16R-STFCR11		1	●	060	5204683	**126,00**
A16R-STFCR11-R		1	●	060	5204685	**126,00**
A16R-SVJBL11		1	●	060	7807973	**126,00**
A16R-SVJBR11		1	●	060	7807974	**126,00**
A16R-SVQBL11		1	●	060	5205361	**126,00**
A16R-SVQBL11-R		1	●	060	5205363	**126,00**
A16R-SVQBR11		1	●	060	5205362	**126,00**
A16R-SVQBR11-R		1	●	060	5205364	**126,00**
A16R-SVUBL11		1	●	060	5205471	**126,00**
A16R-SVUBL11-R		1	●	060	5205473	**126,00**
A16R-SVUBR11		1	●	060	5205472	**126,00**
A16R-SVUBR11-R		1	●	060	5205474	**126,00**
A16R-SWLCL04		1	●	060	5673673	**126,00**
A16R-SWLCL04-R		1	■	060	5204696*	**126,00**
A16R-SWLCR04		1	●	060	5673652	**126,00**
A16R-SWLCR04-R		1	■	060	5204697*	**126,00**
A16T-SCLPL3		1	●	060	7394715	**177,00**
A16T-SCLPR3		1	●	060	7394716	**177,00**
A16T-SDUCL2-X		1	●	060	7394685	**177,00**
A16T-SDUCR2-X		1	●	060	7394686	**177,00**
A170.7.063.065.06.HSK		1	●	076	5007109	**207,00**
A170.7.063.065.08.HSK		1	●	076	5007110	**207,00**
A170.7.063.065.10.HSK		1	●	076	5007111	**207,00**
A170.7.063.080.12.HSK		1	●	076	5007112	**195,00**
A170.7.063.080.16.HSK		1	●	076	5007114	**195,00**
A170.7.063.080.20.HSK		1	●	076	5007116	**208,00**
A170.7.063.110.25.HSK		1	●	076	5007117	**221,00**
A170.7.063.110.32.HSK		1	●	076	5007118	**292,00**
A170.7.100.080.12.HSK		1	●	076	5007122	**243,00**
A170.7.100.100.16.HSK		1	●	076	5007124	**243,00**
A170.7.100.100.20.HSK		1	●	076	5007126	**260,00**
A170.7.100.100.25.HSK		1	●	076	5007127	**276,00**

Bezeichnung / Designation	Sorte / Grade	VE / US		Disc. Gr.	Article No.	EURO Stück / piece
A170.7.100.100.32.HSK		1	●	076	5007128	365,00
A170.7.100.105.40.HSK		1	●	076	5007129	406,00
A170M.0.40.070.16		1	●	070	5007414	248,00
A170M.0.50.060.10		1	●	070	5007376	246,00
A170M.0.50.065.12		1	●	070	5007377	246,00
A170M.0.50.070.16		1	●	070	5007415	254,00
A170M.0.63.070.16		1	●	070	5007378	259,00
A170M.0.63.070.20		1	●	070	5007379	259,00
A170M.0.63.079.32.EX		1	●	070	5007469	627,00
A170M.0.63.080.25		1	●	070	5007380	283,00
A170M.0.63.085.32		1	●	070	5007381	336,00
A170M.0.80.070.20		1	●	070	5007382	277,00
A170M.0.80.079.32.EX		1	●	070	5007470	686,00
A170M.0.80.085.25		1	●	070	5007383	302,00
A170M.0.80.085.32		1	●	070	5007384	350,00
A170M.0.80.087.40.EX		1	●	070	5007471	794,00
A170M.0.80.095.40		1	●	070	5007385	426,00
A170M.0.80.096.50.EX		1	●	070	5007472	881,00
A1722-3		1	●	DH8	5062656	27,20
A1722-3.5		1	●	DH8	5062657	27,40
A1722-4		1	●	DH8	5062658	29,00
A1722-4.5		1	●	DH8	5062659	31,80
A1722-5		1	●	DH8	5062660	33,90
A1722-5.5		1	●	DH8	5062661	37,30
A1722-6		1	●	DH8	5062662	38,70
A1722-6.5		1	●	DH8	5062663	43,20
A1722-7		1	●	DH8	5062664	47,80
A1722-7.5		1	●	DH8	5062665	52,80
A1722-8		1	●	DH8	5062666	57,20
A1722-8.5		1	●	DH8	5062667	76,60
A1722-9		1	●	DH8	5062668	83,80
A1722-9.5		1	●	DH8	5062669	86,90
A1722-10		1	●	DH8	5062651	89,00
A1722-10.5		1	●	DH8	5062652	126,00
A1722-11		1	●	DH8	5062653	129,00
A1722-11.5		1	●	DH8	5062654	140,00
A1722-12		1	●	DH8	5062655	147,00
A175.0.20.090.04		1	●	070	5007054	123,00
A175.0.20.090.05		1	●	070	5007055	110,00
A175.0.20.090.06		1	●	070	5007056	110,00
A175.0.20.090.08		1	●	070	5007057	110,00
A175.0.20.090.10		1	●	070	5007058	110,00
A175.0.20.090.12		1	●	070	5007059	110,00
A175.0.20.130.06		1	●	070	5007062	115,00
A175.0.20.130.08		1	●	070	5007063	115,00
A175.0.20.130.10		1	●	070	5007064	115,00
A175.0.20.130.12		1	●	070	5007065	115,00
A175.0.25.100.16		1	●	070	5007067	115,00
A175.0.25.150.14		1	●	070	5007068	122,00
A175.0.25.150.16		1	●	070	5007069	122,00
A1822-3.5		1	●	DH8	5062675	37,70
A1822-4		1	●	DH8	5062676	37,70
A1822-4.5		1	●	DH8	5062677	45,40
A1822-5		1	●	DH8	5062678	45,40
A1822-5.5		1	●	DH8	5062679	49,30
A1822-6		1	●	DH8	5062680	51,90
A1822-6.5		1	●	DH8	5062681	59,10
A1822-7		1	●	DH8	5062682	72,20
A1822-7.5		1	●	DH8	5062683	82,20
A1822-8		1	●	DH8	5062684	84,30
A1822-8.5		1	●	DH8	5062685	107,00
A1822-9		1	●	DH8	5062686	115,00
A1822-9.5		1	●	DH8	5062687	135,00
A1822-10		1	●	DH8	5062670	134,00
A1822-10.5		1	●	DH8	5062671	147,00
A1822-11		1	●	DH8	5062672	156,00
A1822-11.5		1	●	DH8	5062673	173,00
A1822-12		1	●	DH8	5062674	182,00
A1922L-8		1	●	DH8	5062690	142,00
A1922L-10		1	●	DH8	5062688	317,00

Bezeichnung / Designation	Sorte / Grade	VE / US		Disc. Gr.	Article No.	EURO Stück / piece
A1922L-12		1	●	DH8	5062689	438,00
A1922S-6		1	●	DH8	5062696	88,90
A1922S-6.5		1	●	DH8	5062697	114,00
A1922S-7		1	●	DH8	5062698	120,00
A1922S-8		1	●	DH8	5062699	117,00
A1922S-9		1	●	DH8	5062700	167,00
A1922S-10		1	●	DH8	5062691	225,00
A1922S-11		1	●	DH8	5062692	230,00
A1922S-12		1	●	DH8	5062693	235,00
A1922S-13		1	●	DH8	5062694	285,00
A1922S-14		1	●	DH8	5062695	444,00
A201M.0.50.092.13		1	●	077	5017272	789,00
A2021760-M3		1	●	TH4	5934223	20,34
A2021760-M4		1	●	TH4	5934224	21,79
A2021760-M6		1	●	TH4	5934226	26,80
A2021760-M10		1	●	TH4	5934228	40,20
A2026760-M12		1	●	TH4	5934229	53,40
A2026760-M16		1	●	TH4	5934230	66,30
A20416S-M8	VAP	1	●	TH4	8046430	52,40
A20Q-NTS-IL11-12		1	○	060	6039372	164,00
A20Q-NTS-IL11-13		1	○	060	6039362	164,00
A20Q-NTS-IL11-16		1	○	060	6039369	164,00
A20Q-NTS-IL16-16		1	○	060	6039377	164,00
A20Q-NTS-IR11-12		1	●	060	6039370	164,00
A20Q-NTS-IR11-13		1	●	060	6039297	164,00
A20Q-NTS-IR11-16		1	●	060	6039366	164,00
A20Q-NTS-IR16-16		1	●	060	6039374	164,00
A20S-PCLNL09		1	●	060	6047300	155,00
A20S-PCLNR09		1	●	060	6047302	155,00
A20S-PTFNL11		1	○	060	6047330*	155,00
A20S-PTFNR11		1	●	060	6047331	155,00
A20S-PWLNL06		1	●	060	6039506	247,00
A20S-PWLNR06		1	●	060	6039508	247,00
A20S-SCLCL09		1	●	060	5194488	155,00
A20S-SCLCL09-R		1	●	060	5204652	155,00
A20S-SCLCR09		1	●	060	5194489	155,00
A20S-SCLCR09-R		1	●	060	5204653	155,00
A20S-SDJCL11		1	●	060	7807879	155,00
A20S-SDJCR11		1	●	060	7807970	155,00
A20S-SDQCL11		1	●	060	5204662	155,00
A20S-SDQCL11-R		1	●	060	5204664	155,00
A20S-SDQCR11		1	●	060	5204663	155,00
A20S-SDQCR11-R		1	●	060	5204665	155,00
A20S-SDUCL07-X		1	●	060	5673608	155,00
A20S-SDUCL11		1	●	060	5194510	155,00
A20S-SDUCL11-R		1	●	060	5204672	155,00
A20S-SDUCR07-X		1	●	060	5673609	155,00
A20S-SDUCR11		1	●	060	5194511	155,00
A20S-SDUCR11-R		1	●	060	5204673	155,00
A20S-SDXCL11		1	●	060	7394691	155,00
A20S-SDXCR11		1	●	060	7394692	155,00
A20S-SSKCL09		1	●	060	5194516	155,00
A20S-SSKCR09		1	●	060	5194517	155,00
A20S-STFCL11		1	●	060	5204686	155,00
A20S-STFCR11		1	●	060	5204687	155,00
A20S-SVJBL11		1	●	060	7807975	155,00
A20S-SVJBR11		1	●	060	7807976	155,00
A20S-SVQBL11		1	●	060	5205365	155,00
A20S-SVQBL11-R		1	●	060	5205422	155,00
A20S-SVQBR11		1	●	060	5205366	155,00
A20S-SVQBR11-R		1	●	060	5205423	155,00
A20S-SVUBL11		1	●	060	5205477	155,00
A20S-SVUBL11-R		1	●	060	5205479	155,00
A20S-SVUBR11		1	●	060	5205478	155,00
A20S-SVUBR11-R		1	●	060	5205490	155,00
A20S-SWLCL06		1	●	060	5673674	155,00
A20S-SWLCL06-R		1	■	060	5204698*	155,00
A20S-SWLCR06		1	●	060	5673695	155,00
A20S-SWLCR06-R		1	■	060	5204699*	155,00
A20T-DVUNL3		1	●	060	7394721	287,00

Bezeichnung / Designation	Sorte / Grade	VE / US		Disc. Gr.	Article No.	EURO Stück / piece
A20T-DVUNR3		1	●	060	7394722	287,00
A20T-SDUCL3-X		1	●	060	7394687	248,00
A20T-SDUCR3-X		1	●	060	7394688	248,00
A2110-BT45-26L-080-P		1	○	070	6838291	1.329,00
A2110-BT45-26R-080-P		1	○	070	6838292	1.329,00
A2110-BT55-32L-080-P		1	●	070	6838293	1.329,00
A2110-BT55-32R-080-P		1	●	070	6838294	1.329,00
A2110-BT65-32L-083-P		1	○	070	6838295	1.329,00
A2110-BT65-32R-083-P		1	○	070	6838296	1.329,00
A2110-NA55-32L-076-P		1	■	070	7402157*	1.329,00
A2110-NA55-32R-076-P		1	■	070	7402156*	1.329,00
A2110-NA65-32R-065-P		1	■	070	7402158*	1.329,00
A2110-V25-26L-083-P		1	●	070	6694265	980,00
A2110-V25-26R-083-P		1	●	070	6694266	980,00
A2110-V30-26L-090-P		1	●	070	6694267	980,00
A2110-V30-26R-090-P		1	●	070	6694268	980,00
A2110-V30-32L-084-P		1	●	070	6694269	980,00
A2110-V30-32R-084-P		1	●	070	6694370	980,00
A2110-V40-32L-080-P		1	●	070	6694371	1.005,00
A2110-V40-32R-080-P		1	●	070	6694372	1.005,00
A2111-V30-26L-045-P		1	●	070	6694373	980,00
A2111-V30-26R-045-P		1	●	070	6694374	980,00
A2111-V30-32L-045-P		1	●	070	6694375	980,00
A2111-V30-32R-045-P		1	●	070	6694376	980,00
A2111-V40-32L-045-P		1	●	070	6694377	1.005,00
A2111-V40-32R-045-P		1	●	070	6694378	1.005,00
A2120-BT45-20N-063-P		1	■	070	7402154*	886,00
A2120-BT55-25N-060-P		1	■	070	7669788*	886,00
A2120-C5-20L-095-P		1	●	070	7503105	605,00
A2120-C5-20R-095-P		1	●	070	7503106	605,00
A2120-C6-20L-105-P		1	●	070	7503107	696,00
A2120-C6-20R-105-P		1	●	070	7503108	696,00
A2120-C6-25L-122-P		1	●	070	7503109	696,00
A2120-C6-25R-122-P		1	●	070	7503180	696,00
A2120-DO-25N-072-P		1	■	070	7402152*	886,00
A2120-V25-20N-055-P		1	●	070	7402151	492,00
A2120-V30-20N-070-P		1	●	070	7253648	492,00
A2120-V40-25N-085-P		1	●	070	7253649	505,00
A2120-V50-25N-100-P		1	●	070	7669787	505,00
A2121-C5-20N-064-P		1	●	070	7503181	605,00
A2121-C6-25N-076-P		1	●	070	7503182	696,00
A2121-V30-20L-070-P		1	●	070	6787722	492,00
A2121-V30-20R-070-P		1	●	070	6787721	492,00
A2121-V40-25L-085-P		1	●	070	6787724	505,00
A2121-V40-25R-085-P		1	●	070	6787723	505,00
A2121-V50-25L-100-P		1	●	070	6787726	505,00
A2121-V50-25R-100-P		1	●	070	6787725	505,00
A2140-W16-R06-048		1	●	070	7986190	201,00
A2140-W16-R08-048		1	●	070	7984402	201,00
A2140-W16-R10-048		1	●	070	7984403	201,00
A2140-W16-R12-048		1	●	070	7984404	201,00
A2140-W20-R06-055		1	●	070	7984406	201,00
A2140-W20-R08-055		1	●	070	7984407	201,00
A2140-W20-R10-055		1	●	070	7984408	201,00
A2140-W20-R12-055		1	●	070	7984409	201,00
A2140-W20-R16-055		1	●	070	7984440	201,00
A2140-W25-R06-061		1	●	070	5673920	201,00
A2140-W25-R08-061		1	●	070	5673921	201,00
A2140-W25-R10-061		1	●	070	5205330	201,00
A2140-W25-R12-061		1	●	070	5205331	201,00
A2140-W25-R16-061		1	●	070	5205332	201,00
A2140-W32-R06-065		1	●	070	5673922	213,00
A2140-W32-R08-065		1	●	070	5673923	213,00
A2140-W32-R10-065		1	●	070	5205333	213,00
A2140-W32-R12-065		1	●	070	5205334	213,00
A2140-W32-R16-065		1	●	070	5205335	213,00
A2140-W32-R20-065		1	●	070	5205336	213,00
A2140-W40-R06-075		1	●	070	5673924	238,00
A2140-W40-R08-075		1	●	070	5673926	238,00
A2140-W40-R10-075		1	●	070	5205337	238,00

Bezeichnung / Designation	Sorte / Grade	VE / US		Disc. Gr.	Article No.	EURO Stück / piece
A2140-W40-R12-075		1	●	070	5205338	238,00
A2140-W40-R16-075		1	●	070	5205339	238,00
A2140-W40-R20-075		1	●	070	5205340	238,00
A2140-W40-R25-075		1	●	070	5962515	238,00
A2201-QL100-28-29-Q50		1	●	073	7956061	789,00
A2201-QL100-38-29-Q50		1	●	073	7956062	789,00
A2201-QL60-05-27-Q50		1	●	073	7955717	667,00
A2201-QL60-10-27-Q50		1	●	073	7955718	667,00
A2201-QL80-15-27-Q50		1	●	073	7955719	728,00
A2201-QL80-23-27-Q50		1	●	073	7956060	728,00
A2201.QL64-07-27-Q50		1	●	073	7956063	667,00
A2201.QL64-12-27-Q50		1	●	073	7956064	667,00
A2201.QL76-13-27-Q50		1	●	073	7956065	728,00
A2201.QL76-21-27-Q50		1	●	073	7956066	728,00
A2220760-UNC2		1	●	TH4	5934175	21,84
A2220760-UNC4		1	●	TH4	5934176	20,34
A2220760-UNC6		1	●	TH4	5934178	26,00
A2220760-UNC8		1	●	TH4	5934179	21,79
A2220760-UNC10		1	●	TH4	5934180	23,44
A2220760-UNC1/4		1	●	TH4	5934181	26,80
A2220760-UNC5/16		1	●	TH4	5934182	33,50
A2220760-UNC3/8		1	●	TH4	5934183	40,20
A2220766-UNC2	TICN	1	●	TH4	5934139	36,10
A2220766-UNC4	TICN	1	●	TH4	5934160	33,60
A2220766-UNC5	TICN	1	●	TH4	5934161	33,60
A2220766-UNC6	TICN	1	●	TH4	5934162	42,90
A2220766-UNC8	TICN	1	●	TH4	5934163	36,00
A2220766-UNC10	TICN	1	●	TH4	5934164	38,70
A2220766-UNC1/4	TICN	1	●	TH4	5934165	44,30
A2220766-UNC5/16	TICN	1	●	TH4	5934166	55,30
A2220766-UNC3/8	TICN	1	●	TH4	5934167	66,40
A222079-STIUNC8		1	●	TH4	5934235	21,79
A222079-STIUNC6		1	●	TH4	5934234	26,00
A222079-STIUNC4		1	●	TH4	5934233	22,59
A222079-STIUNC2		1	●	TH4	5934232	21,84
A2225760-UNC1/2		1	●	TH4	5934185	53,40
A2225766-UNC7/16	TICN	1	●	TH4	5934168	73,10
A2225766-UNC1/2	TICN	1	●	TH4	5934169	88,30
A2225766-UNC5/8	TICN	1	●	TH4	5934171	110,00
A2225766-UNC3/4	TICN	1	●	TH4	5934172	146,00
A2225766-UNC1	TICN	1	●	TH4	5934174	195,00
A224003S-UNC6	VAP	1	●	TH4	8046343	57,00
A224003S-UNC8	VAP	1	●	TH4	8046344	59,10
A224003S-UNC10	VAP	1	●	TH4	8046345	63,10
A224003S-UNC1/4	VAP	1	●	TH4	8046340	67,20
A224003S-UNC5/16	VAP	1	●	TH4	8046342	79,40
A224003S-UNC3/8	VAP	1	●	TH4	8046341	82,50
A2240606S-UNC2	TICN	1	●	TH4	8046359	52,70
A2240606S-UNC4	TICN	1	●	TH4	8046361	43,50
A2240606S-UNC5	TICN	1	●	TH4	8046362	51,90
A2240606S-UNC6	TICN	1	●	TH4	8046364	52,90
A2240606S-UNC8	TICN	1	●	TH4	8046365	54,80
A2240606S-UNC10	TICN	1	●	TH4	8046366	58,70
A2240606S-UNC1/4	TICN	1	●	TH4	8046358	63,50
A2240606S-UNC5/16	TICN	1	●	TH4	8046363	73,10
A2240606S-UNC3/8	TICN	1	●	TH4	8046360	77,90
A224060S-STIUNC4	VAP	1	●	TH4	8046355	72,60
A224060S-STIUNC10	VAP	1	●	TH4	8046423	73,10
A224060S-STIUNC8	VAP	1	●	TH4	8046357	67,20
A224060S-STIUNC2	VAP	1	●	TH4	8046422	51,40
A224060S-STIUNC6	VAP	1	●	TH4	8046356	66,20
A2240661S-UNC2	VAP	1	●	TH4	8046431	49,70
A2240661S-UNC4	VAP	1	●	TH4	8046432	39,00
A2240661S-UNC6	VAP	1	●	TH4	8046433	56,00
A2240661S-UNC8	VAP	1	●	TH4	8046434	58,00
A2240661S-UNC10	VAP	1	●	TH4	8046435	62,10
A2240661S-UNC1/4	VAP	1	●	TH4	8046436	67,20
A2240661S-UNC5/16	VAP	1	●	TH4	8046437	77,40
A22406S-UNC2	VAP	1	●	TH4	8046347	49,70
A22406S-UNC4	VAP	1	●	TH4	8046349	39,00

Bezeichnung / Designation	Sorte / Grade	VE / US		Disc. Gr.	Article No.	EURO Stück / piece
A22406S-UNC5	VAP	1	●	TH4	8046350	47,90
A22406S-UNC6	VAP	1	●	TH4	8046352	56,00
A22406S-UNC8	VAP	1	●	TH4	8046353	58,00
A22406S-UNC10	VAP	1	●	TH4	8046354	62,10
A22406S-UNC1/4	VAP	1	●	TH4	8046346	67,20
A22406S-UNC5/16	VAP	1	●	TH4	8046351	77,40
A22406S-UNC3/8	VAP	1	●	TH4	8046348	82,50
A224089S-STIUNC2	VAP	1	●	TH4	8046438	51,40
A224089S-STIUNC4	VAP	1	●	TH4	8046439	55,00
A224089S-STIUNC6	VAP	1	●	TH4	8046440	49,70
A224089S-STIUNC8	VAP	1	●	TH4	8046441	49,70
A224089S-STIUNC1/4	VAP	1	●	TH4	8046442	97,80
A224503S-UNC7/16	VAP	1	●	TH4	8046369	121,00
A224503S-UNC1/2	VAP	1	●	TH4	8046367	119,00
A224503S-UNC5/8	VAP	1	●	TH4	8046368	161,00
A2245606S-UNC7/16	TICN	1	●	TH4	8046378	105,00
A2245606S-UNC1/2	TICN	1	●	TH4	8046375	106,00
A2245606S-UNC5/8	TICN	1	●	TH4	8046377	152,00
A2245606S-UNC3/4	TICN	1	●	TH4	8046376	181,00
A2245661S-UNC1/2	VAP	1	●	TH4	8046443	112,00
A2245661S-UNC5/8	VAP	1	●	TH4	8046444	161,00
A2245661S-UNC3/4	VAP	1	●	TH4	8046445	151,00
A22456S-UNC7/16	VAP	1	●	TH4	8046373	111,00
A22456S-UNC1/2	VAP	1	●	TH4	8046370	112,00
A22456S-UNC9/16	VAP	1	●	TH4	8046374	115,00
A22456S-UNC5/8	VAP	1	●	TH4	8046372	161,00
A22456S-UNC3/4	VAP	1	●	TH4	8046371	151,00
A22456S-UNC1	VAP	1	●	TH4	8046424	204,00
A2320760-UNF0		1	●	TH4	5934207	31,60
A2320760-UNF8		1	●	TH4	5934210	22,86
A2320760-UNF10		1	●	TH4	5934211	24,62
A2320760-UNF1/4		1	●	TH4	5934213	28,10
A2320760-UNF3/8		1	●	TH4	5934215	42,20
A2320766-UNF0	TICN	1	●	TH4	5934191	52,30
A2320766-UNF10	TICN	1	●	TH4	5934195	40,70
A2320766-UNF1/4	TICN	1	●	TH4	5934197	46,50
A2320766-UNF5/16	TICN	1	●	TH4	5934198	58,10
A2320766-UNF3/8	TICN	1	●	TH4	5934199	69,70
A232079-STIUNF1/4		1	●	TH4	5934242	28,10
A232079-STIUNF10		1	●	TH4	5934241	24,62
A2325760-UNF7/16		1	●	TH4	5934216	46,40
A2325760-UNF1/2		1	●	TH4	5934217	56,10
A2325760-UNF9/16		1	●	TH4	5934218	73,50
A2325760-UNF5/8		1	●	TH4	5934219	69,60
A2325760-UNF3/4		1	●	TH4	5934220	92,80
A2325766-UNF7/16	TICN	1	●	TH4	5934200	76,70
A2325766-UNF1/2	TICN	1	●	TH4	5934201	92,70
A2325766-UNF9/16	TICN	1	●	TH4	5934202	121,00
A2325766-UNF5/8	TICN	1	●	TH4	5934203	115,00
A2325766-UNF3/4	TICN	1	●	TH4	5934204	153,00
A232579-STIUNF3/8		1	●	TH4	5934244	42,20
A234000S-STIUNF5/16	VAP	1	●	TH4	8046425	103,00
A234000S-STIUNF10	VAP	1	●	TH4	8046380	83,50
A234000S-STIUNF1/4	VAP	1	●	TH4	8046379	97,80
A234002S-UNF6	VAP	1	●	TH4	8046384	67,20
A234002S-UNF8	VAP	1	●	TH4	8046385	67,20
A234002S-UNF10	VAP	1	●	TH4	8046386	72,30
A234002S-UNF12	VAP	1	●	TH4	8046387	90,70
A234002S-UNF1/4	VAP	1	●	TH4	8046381	82,50
A234002S-UNF5/16	VAP	1	●	TH4	8046383	87,60
A234002S-UNF3/8	VAP	1	●	TH4	8046382	91,70
A234003S-UNF0	VAP	1	●	TH4	8046426	74,50
A234003S-UNF10	VAP	1	●	TH4	8046391	72,30
A234003S-UNF1/4	VAP	1	●	TH4	8046388	82,50
A234003S-UNF5/16	VAP	1	●	TH4	8046390	87,60
A234003S-UNF3/8	VAP	1	●	TH4	8046389	91,70
A2340606S-UNF0	TICN	1	●	TH4	8046402	76,20
A2340606S-UNF8	TICN	1	●	TH4	8046405	52,20
A2340606S-UNF10	TICN	1	●	TH4	8046406	57,70
A2340606S-UNF1/4	TICN	1	●	TH4	8046403	65,00

Bezeichnung / Designation	Sorte / Grade	VE / US		Disc. Gr.	Article No.	EURO Stück / piece
A2340606S-UNF5/16	TICN	1	●	TH4	8046404	69,60
A234060S-STIUNF8	VAP	1	●	TH4	8046427	49,70
A234060S-STIUNF1/4	VAP	1	●	TH4	8046399	94,70
A234060S-STIUNF5/16	VAP	1	●	TH4	8046400	101,00
A234060S-STIUNF10	VAP	1	●	TH4	8046401	83,50
A2340661S-UNF0	VAP	1	●	TH4	8046446	74,50
A2340661S-UNF1	VAP	1	●	TH4	8046447	69,10
A2340661S-UNF10	VAP	1	●	TH4	8046448	61,10
A2340661S-UNF1/4	VAP	1	●	TH4	8046449	68,80
A2340661S-UNF5/16	VAP	1	●	TH4	8046450	73,70
A23406S-UNF0	VAP	1	●	TH4	8046392	74,50
A23406S-UNF1	VAP	1	●	TH4	8046393	69,10
A23406S-UNF6	VAP	1	●	TH4	8046397	55,30
A23406S-UNF10	VAP	1	●	TH4	8046398	61,10
A23406S-UNF1/4	VAP	1	●	TH4	8046394	68,80
A23406S-UNF5/16	VAP	1	●	TH4	8046396	73,70
A23406S-UNF3/8	VAP	1	●	TH4	8046395	78,60
A234502S-UNF7/16	VAP	1	●	TH4	8046409	126,00
A234502S-UNF1/2	VAP	1	●	TH4	8046407	126,00
A234502S-UNF9/16	VAP	1	●	TH4	8046410	129,00
A234502S-UNF3/4	VAP	1	●	TH4	8046408	165,00
A234503S-UNF7/16	VAP	1	●	TH4	8046413	126,00
A234503S-UNF1/2	VAP	1	●	TH4	8046411	126,00
A234503S-UNF9/16	VAP	1	●	TH4	8046414	138,00
A234503S-UNF3/4	VAP	1	●	TH4	8046412	175,00
A2345606S-UNF7/16	TICN	1	●	TH4	8046420	93,40
A2345606S-UNF1/2	TICN	1	●	TH4	8046419	96,10
A2345606S-UNF9/16	TICN	1	●	TH4	8046421	123,00
A2345606S-UNF1	TICN	1	●	TH4	8046429	246,00
A234560S-STIUNF3/8	VAP	1	●	TH4	8046418	107,00
A2345661S-UNF7/16	VAP	1	●	TH4	8046451	98,90
A2345661S-UNF1/2	VAP	1	●	TH4	8046452	102,00
A23456S-UNF7/16	VAP	1	●	TH4	8046417	98,90
A23456S-UNF1/2	VAP	1	●	TH4	8046415	102,00
A23456S-UNF3/4	VAP	1	●	TH4	8046416	152,00
A23456S-UNF7/8	VAP	1	●	TH4	8046428	152,00
A234589S-STIUNF3/8	VAP	1	●	TH4	8046453	107,00
A24T-DVUNL3		1	●	060	7394723	321,00
A24T-DVUNR3		1	●	060	7394724	321,00
A25T-DCLNL12		1	●	060	5522728	274,00
A25T-DCLNR12		1	●	060	5522729	274,00
A25T-DDUNL11		1	●	060	5522830	274,00
A25T-DDUNR11		1	●	060	5522831	274,00
A25T-DSKNL12		1	●	060	5522860	274,00
A25T-DSKNR12		1	●	060	5522861	274,00
A25T-DTFNL16		1	●	060	5522869	274,00
A25T-DTFNR16		1	●	060	5522910	274,00
A25T-DWLNL06		1	●	060	5522924	274,00
A25T-DWLNL08		1	●	060	5522928	274,00
A25T-DWLNR06		1	●	060	5522925	274,00
A25T-DWLNR08		1	●	060	5522929	274,00
A25T-PCLNL09		1	●	060	6047303	274,00
A25T-PCLNL12		1	●	060	6038081	274,00
A25T-PCLNR09		1	●	060	6047304	274,00
A25T-PCLNR12		1	●	060	6038084	274,00
A25T-PDUNL11		1	●	060	6039454	274,00
A25T-PDUNR11		1	●	060	6039467	274,00
A25T-PSKNL12		1	●	060	6038154	274,00
A25T-PSKNR12		1	●	060	6038155	274,00
A25T-PTFNL16		1	●	060	6039349	274,00
A25T-PTFNR16		1	●	060	6039750	274,00
A25T-PWLNL06		1	●	060	6039511	274,00
A25T-PWLNL08		1	●	060	6039517	274,00
A25T-PWLNR06		1	●	060	6039512	274,00
A25T-PWLNR08		1	●	060	6039518	274,00
A25T-SCLCL09		1	●	060	5194500	177,00
A25T-SCLCL12		1	●	060	5194502	177,00
A25T-SCLCR09		1	●	060	5194501	177,00
A25T-SCLCR12		1	●	060	5194503	177,00
A25T-SDJCL11		1	●	060	7807971	177,00

Bezeichnung / Designation	Sorte / Grade	VE / US		Disc. Gr.	Article No.	EURO Stück / piece
A25T-SDJCR11		1	●	060	7807972	177,00
A25T-SDQCL11		1	●	060	5204666	177,00
A25T-SDQCR11		1	●	060	5204667	177,00
A25T-SDUCL07-X		1	●	060	5673630	177,00
A25T-SDUCL11		1	●	060	5194512	177,00
A25T-SDUCR07-X		1	●	060	5673631	177,00
A25T-SDUCR11		1	●	060	5194513	177,00
A25T-SDXCL11		1	●	060	7838589	177,00
A25T-SDXCR11		1	●	060	7838660	177,00
A25T-SSKCL12		1	●	060	5194518	177,00
A25T-SSKCR12		1	●	060	5194519	177,00
A25T-STFCL16		1	●	060	5194520	177,00
A25T-STFCR16		1	●	060	5194521	177,00
A25T-SVQBL11		1	●	060	5205424	177,00
A25T-SVQBR11		1	●	060	5205425	177,00
A25T-SVUBL11		1	●	060	5205491	177,00
A25T-SVUBR11		1	●	060	5205492	177,00
A25T-SWLCL06		1	●	060	5204700	177,00
A25T-SWLCL08		1	●	060	5204704	177,00
A25T-SWLCR06		1	●	060	5204701	177,00
A25T-SWLCR08		1	●	060	5204705	177,00
A3000-25-Q25-130		1	●	073	7940032	1.020,00
A3000-25-Q25-180		1	●	073	7940033	1.530,00
A3000-25-Q25-230-CS		1	●	073	7940034	2.234,00
A3000-32-Q32-160		1	●	073	7816960	1.339,00
A3000-32-Q32-224		1	●	073	7816961	2.008,00
A3000-32-Q32-288-CS		1	●	073	7940035	2.933,00
A3000-40-Q40-208		1	●	073	7816963	1.513,00
A3000-40-Q40-288		1	●	073	7816964	2.269,00
A3000-40-Q40-368		1	●	073	7816965	3.026,00
A3000-50-Q50-268		1	●	073	7816966	1.807,00
A3000-50-Q50-368		1	●	073	7816967	2.711,00
A3000-50-Q50-468		1	●	073	7816968	3.615,00
A3000-C4-Q25-130		1	●	073	7940036	1.071,00
A3000-C4-Q25-180		1	●	073	7940037	1.607,00
A3000-C4-Q32-160		1	●	073	7940038	1.339,00
A3000-C4-Q32-224		1	●	073	7940039	2.008,00
A3000-C5-Q25-130		1	●	073	7940070	1.183,00
A3000-C5-Q25-180		1	●	073	7940071	1.775,00
A3000-C5-Q25-230		1	●	073	7940072	2.366,00
A3000-C5-Q32-160		1	●	073	7940073	1.479,00
A3000-C5-Q32-224		1	●	073	7940074	2.219,00
A3000-C5-Q32-288		1	●	073	7940075	2.958,00
A3000-C5-Q40-208		1	●	073	7940076	1.671,00
A3000-C5-Q40-288		1	●	073	7940077	2.507,00
A3000-C6-Q25-130		1	●	073	7940079	1.357,00
A3000-C6-Q25-180		1	●	073	7940080	2.035,00
A3000-C6-Q25-230		1	●	073	7940081	2.713,00
A3000-C6-Q32-160		1	●	073	7816969	1.696,00
A3000-C6-Q32-224		1	●	073	7816970	2.544,00
A3000-C6-Q32-288		1	●	073	7816971	3.392,00
A3000-C6-Q40-208		1	●	073	7816972	1.916,00
A3000-C6-Q40-288		1	●	073	7816973	2.874,00
A3000-C6-Q40-368		1	●	073	7816974	3.832,00
A3000-C6-Q50-268		1	●	073	7816975	2.289,00
A3000-C6-Q50-368		1	●	073	7816976	3.434,00
A3000-C6-Q50-468		1	●	073	7816977	4.579,00
A3000-C8-Q32-224		1	●	073	7816978	2.754,00
A3000-C8-Q32-288		1	●	073	7816979	3.672,00
A3000-C8-Q40-288		1	●	073	7816980	3.112,00
A3000-C8-Q40-368		1	●	073	7816981	4.149,00
A3000-C8-Q50-268		1	●	073	7816982	2.479,00
A3000-C8-Q50-368		1	●	073	7816983	3.718,00
A3000-C8-Q50-468		1	●	073	7816984	4.957,00
A3000-H100T-Q32-224		1	●	073	7816985	2.754,00
A3000-H100T-Q32-288		1	●	073	7816986	3.672,00
A3000-H100T-Q40-288		1	●	073	7816987	3.112,00
A3000-H100T-Q40-368		1	●	073	7816988	4.149,00
A3000-H100T-Q50-268		1	●	073	7816989	2.479,00
A3000-H100T-Q50-368		1	●	073	7816990	3.718,00

Bezeichnung / Designation	Sorte / Grade	VE / US		Disc. Gr.	Article No.	EURO Stück / piece
A3000-H100T-Q50-468		1	●	073	7816991	4.957,00
A3000-H63T-Q25-130		1	●	073	7940082	1.357,00
A3000-H63T-Q25-180		1	●	073	7940083	2.035,00
A3000-H63T-Q25-230		1	●	073	7940084	2.713,00
A3000-H63T-Q32-160		1	●	073	7940085	1.696,00
A3000-H63T-Q32-224		1	●	073	7940086	2.544,00
A3000-H63T-Q40-208		1	●	073	7940087	1.916,00
A3000-H63T-Q40-288		1	●	073	7940088	2.874,00
A3000-H63T-Q50-268		1	●	073	7940089	2.289,00
A3000-H63T-Q50-368		1	●	073	7940090	3.434,00
A3000.16-Q25-133		1	●	073	7940093	1.020,00
A3000.16-Q25-184		1	●	073	7940094	1.530,00
A3000.16-Q25-235-CS		1	●	073	7940095	2.234,00
A3000.20-Q32-165		1	●	073	7816992	1.339,00
A3000.20-Q32-229		1	●	073	7816993	2.008,00
A3000.20-Q32-292-CS		1	●	073	7940096	2.933,00
A3000.24-Q40-203		1	●	073	7816995	1.513,00
A3000.24-Q40-279		1	●	073	7816996	2.269,00
A3000.24-Q40-356		1	●	073	7816997	3.026,00
A3000.32-Q50-267		1	●	073	7816998	1.807,00
A3000.32-Q50-368		1	●	073	7816999	2.711,00
A3000.32-Q50-470		1	●	073	7817010	3.615,00
A3001-100-QL100-939		1	●	073	7956082	10.328,00
A3001-60-QL60-301		1	●	073	7956068	2.008,00
A3001-60-QL60-541		1	●	073	7956069	4.016,00
A3001-80-QL80-421		1	●	073	7956080	3.825,00
A3001-80-QL80-741		1	●	073	7956081	7.650,00
A3001-C6-QL60-301		1	●	073	7956083	2.544,00
A3001-C6-QL60-421		1	●	073	7956084	3.816,00
A3001-C8-QL60-301		1	●	073	7956085	2.754,00
A3001-C8-QL60-421		1	●	073	7956086	4.131,00
A3001-C8-QL60-541		1	●	073	7956087	5.508,00
A3001-C8-QL80-421		1	●	073	7956088	4.590,00
A3001-C8-QL80-581		1	●	073	7956089	6.885,00
A3001-H100T-QL60-301		1	●	073	7956090	2.754,00
A3001-H100T-QL60-421		1	●	073	7956091	4.131,00
A3001-H100T-QL60-541		1	●	073	7956092	5.508,00
A3001-H100T-QL80-421		1	●	073	7956093	4.590,00
A3001-H100T-QL80-581		1	●	073	7956094	6.885,00
A3001.40-QL64-318		1	●	073	7956095	2.008,00
A3001.40-QL64-572		1	●	073	7956096	4.016,00
A3001.48-QL76-394		1	●	073	7956097	3.825,00
A3001.48-QL76-699		1	●	073	7956098	7.650,00
A3001.64-QL100-953		1	●	073	7956099	10.328,00
A305.0.16.120.06		1	●	077	5007504	230,00
A305.0.16.180.06		1	●	077	5007505	241,00
A305.0.25.140.10		1	●	077	5007506	250,00
A305.0.25.180.10		1	●	077	5007507	250,00
A3143-0.05		5	●	DHM	5062839	17,70
A3143-0.06		5	●	DHM	5062840	17,70
A3143-0.07		5	●	DHM	5062841	17,34
A3143-0.08		5	●	DHM	5062842	17,10
A3143-0.09		5	●	DHM	5062843	17,34
A3143-0.1		10	●	DHM	5062844	14,39
A3143-0.11		10	●	DHM	5062845	17,10
A3143-0.12		10	●	DHM	5062846	15,75
A3143-0.13		10	●	DHM	5062847	15,41
A3143-0.14		10	●	DHM	5062848	14,83
A3143-0.15		10	●	DHM	5062849	14,12
A3143-0.16		10	●	DHM	5062850	13,76
A3143-0.17		10	●	DHM	5062851	13,49
A3143-0.18		10	●	DHM	5062852	12,86
A3143-0.19		10	●	DHM	5062853	12,86
A3143-0.2		10	●	DHM	5062854	11,79
A3143-0.21		10	●	DHM	5062855	12,39
A3143-0.22		10	●	DHM	5062856	12,39
A3143-0.23		10	●	DHM	5062857	12,39
A3143-0.24		10	●	DHM	5062858	12,39
A3143-0.25		10	●	DHM	5062859	10,66
A3143-0.26		10	●	DHM	5062860	10,43

Bezeichnung / Designation	Sorte / Grade	VE / US		Disc. Gr.	Article No.	EURO Stück / piece
A3143-0.27		10	●	DHM	5062861	10,33
A3143-0.28		10	●	DHM	5062862	10,03
A3143-0.29		10	●	DHM	5062863	9,96
A3143-0.3		10	●	DHM	5062864	9,96
A3143-0.31		10	●	DHM	5062865	9,43
A3143-0.32		10	●	DHM	5062866	9,54
A3143-0.33		10	●	DHM	5062867	9,43
A3143-0.34		10	●	DHM	5062868	9,43
A3143-0.35		10	●	DHM	5062869	9,13
A3143-0.36		10	●	DHM	5062870	9,43
A3143-0.37		10	●	DHM	5062871	9,43
A3143-0.38		10	●	DHM	5062872	9,43
A3143-0.39		10	●	DHM	5062873	9,30
A3143-0.4		10	●	DHM	5062874	7,75
A3143-0.41		10	●	DHM	5062875	9,30
A3143-0.42		10	●	DHM	5062876	9,30
A3143-0.43		10	●	DHM	5062877	9,30
A3143-0.44		10	●	DHM	5062878	9,30
A3143-0.45		10	●	DHM	5062879	8,44
A3143-0.46		10	●	DHM	5062880	8,59
A3143-0.47		10	●	DHM	5062881	8,59
A3143-0.48		10	●	DHM	5062882	8,59
A3143-0.49		10	●	DHM	5062883	8,35
A3143-0.5		10	●	DHM	5062884	7,37
A3143-0.51		10	●	DHM	5062885	8,35
A3143-0.52		10	●	DHM	5062886	8,35
A3143-0.53		10	●	DHM	5062887	8,35
A3143-0.54		10	●	DHM	5062888	7,86
A3143-0.55		10	●	DHM	5062889	7,86
A3143-0.56		10	●	DHM	5062890	7,86
A3143-0.57		10	●	DHM	5062891	7,86
A3143-0.58		10	●	DHM	5062892	7,86
A3143-0.59		10	●	DHM	5062893	7,86
A3143-0.6		10	●	DHM	5062894	7,11
A3143-0.61		10	●	DHM	5062895	7,79
A3143-0.62		10	●	DHM	5062896	7,79
A3143-0.63		10	●	DHM	5062897	7,79
A3143-0.64		10	●	DHM	5062898	7,79
A3143-0.65		10	●	DHM	5062899	7,79
A3143-0.66		10	●	DHM	5062900	7,79
A3143-0.67		10	●	DHM	5062901	7,79
A3143-0.68		10	●	DHM	5062902	7,79
A3143-0.69		10	●	DHM	5062903	7,79
A3143-0.7		10	●	DHM	5062904	7,01
A3143-0.71		10	●	DHM	5062905	7,79
A3143-0.72		10	●	DHM	5062906	7,79
A3143-0.73		10	●	DHM	5062907	7,79
A3143-0.74		10	●	DHM	5062908	7,75
A3143-0.75		10	●	DHM	5062909	7,75
A3143-0.76		10	●	DHM	5062910	7,79
A3143-0.77		10	●	DHM	5062911	7,79
A3143-0.78		10	●	DHM	5062912	7,79
A3143-0.79		10	●	DHM	5062913	7,79
A3143-0.8		10	●	DHM	5062914	7,16
A3143-0.81		10	●	DHM	5062915	7,86
A3143-0.82		10	●	DHM	5062916	7,86
A3143-0.83		10	●	DHM	5062917	7,86
A3143-0.84		10	●	DHM	5062918	7,86
A3143-0.85		10	●	DHM	5062919	7,86
A3143-0.86		10	●	DHM	5062920	7,86
A3143-0.87		10	●	DHM	5062921	7,86
A3143-0.88		10	●	DHM	5062922	7,86
A3143-0.89		10	●	DHM	5062923	7,99
A3143-0.9		10	●	DHM	5062924	7,16
A3143-0.91		10	●	DHM	5062925	7,99
A3143-0.92		10	●	DHM	5062926	7,99
A3143-0.93		10	●	DHM	5062927	7,99
A3143-0.94		10	●	DHM	5062928	7,99
A3143-0.95		10	●	DHM	5062929	7,99
A3143-0.96		10	●	DHM	5062930	7,99

Bezeichnung / Designation	Sorte / Grade	VE / US		Disc. Gr.	Article No.	EURO Stück / piece
A3143-0.97		10	●	DHM	5062931	8,16
A3143-0.98		10	●	DHM	5062932	8,16
A3143-0.99		10	●	DHM	5062933	8,16
A3143-1		10	●	DHM	5062934	7,16
A3143-1.05		10	●	DHM	5062935	8,16
A3143-1.1		10	●	DHM	5062936	7,75
A3143-1.15		10	●	DHM	5062937	8,16
A3143-1.2		10	●	DHM	5062938	7,75
A3143-1.25		10	●	DHM	5062939	8,25
A3143-1.3		10	●	DHM	5062940	7,79
A3143-1.35		10	●	DHM	5062941	8,25
A3143-1.4		10	●	DHM	5062942	7,86
A3143-1.45		10	●	DHM	5062943	8,44
A3153-0.15		10	●	DHM	5062954	21,32
A3153-0.17		10	●	DHM	5062956	18,69
A3153-0.18		10	●	DHM	5062957	18,40
A3153-0.19		10	●	DHM	5062958	18,40
A3153-0.2		10	●	DHM	5062959	16,78
A3153-0.21		10	●	DHM	5062960	18,69
A3153-0.23		10	○	DHM	5062962	18,69
A3153-0.24		10	○	DHM	5062963*	18,69
A3153-0.25		10	●	DHM	5062964	15,07
A3153-0.26		10	○	DHM	5062965*	14,83
A3153-0.27		10	○	DHM	5062966	14,83
A3153-0.28		10	○	DHM	5062967	14,39
A3153-0.3		10	●	DHM	5062969	14,39
A3153-0.31		10	●	DHM	5062970	13,49
A3153-0.32		10	○	DHM	5062971	13,04
A3153-0.33		10	●	DHM	5062972	12,94
A3153-0.34		10	○	DHM	5062973	12,94
A3153-0.35		10	●	DHM	5062974	12,47
A3153-0.37		10	○	DHM	5062976	12,94
A3153-0.38		10	○	DHM	5062977	12,94
A3153-0.4		10	●	DHM	5062979	11,16
A3153-0.41		10	○	DHM	5062980	12,86
A3153-0.43		10	○	DHM	5062982	12,86
A3153-0.45		10	●	DHM	5062984	12,86
A3153-0.47		10	○	DHM	5062986	11,92
A3153-0.48		10	●	DHM	5062987	11,92
A3153-0.49		10	○	DHM	5062988*	11,92
A3153-0.5		10	●	DHM	5062989	10,43
A3153-0.52		10	●	DHM	5062991	11,45
A3153-0.53		10	●	DHM	5062992	11,45
A3153-0.54		10	●	DHM	5062993	11,45
A3153-0.55		10	○	DHM	5062994	10,54
A3153-0.56		10	○	DHM	5062995	11,56
A3153-0.57		10	●	DHM	5062996	11,56
A3153-0.58		10	●	DHM	5062997	11,56
A3153-0.59		10	●	DHM	5062998	11,56
A3153-0.6		10	●	DHM	5062999	9,54
A3153-0.61		10	●	DHM	5063000	11,16
A3153-0.62		10	●	DHM	5063001	11,16
A3153-0.63		10	●	DHM	5063002	11,16
A3153-0.65		10	●	DHM	5063004	10,47
A3153-0.67		10	○	DHM	5063006*	11,16
A3153-0.68		10	●	DHM	5063007	11,16
A3153-0.7		10	●	DHM	5063009	9,54
A3153-0.72		10	●	DHM	5063011	11,16
A3153-0.73		10	○	DHM	5063012	11,16
A3153-0.74		10	●	DHM	5063013	11,10
A3153-0.75		10	●	DHM	5063014	10,47
A3153-0.76		10	●	DHM	5063015	11,16
A3153-0.77		10	○	DHM	5063016	11,16
A3153-0.78		10	○	DHM	5063017	11,16
A3153-0.8		10	●	DHM	5063019	9,89
A3153-0.82		10	○	DHM	5063021	13,76
A3153-0.83		10	○	DHM	5063022	13,76
A3153-0.84		10	●	DHM	5063023	15,07
A3153-0.85		10	●	DHM	5063024	10,89
A3153-0.87		10	○	DHM	5063026	13,76

Bezeichnung / Designation	Sorte / Grade	VE / US		Disc. Gr.	Article No.	EURO Stück / piece
A3153-0.89		10	●	DHM	5063028	13,76
A3153-0.9		10	●	DHM	5063029	9,89
A3153-0.91		10	○	DHM	5063030	13,76
A3153-0.92		10	●	DHM	5063031	13,76
A3153-0.93		10	○	DHM	5063032*	13,76
A3153-0.94		10	●	DHM	5063033	13,76
A3153-0.95		10	●	DHM	5063034	11,10
A3153-0.96		10	○	DHM	5063035	13,76
A3153-0.97		10	●	DHM	5063036	16,78
A3153-0.98		10	○	DHM	5063037	15,41
A3153-1		10	●	DHM	5063039	9,89
A3153-1.05		10	●	DHM	5063040	11,56
A3153-1.1		10	●	DHM	5063041	10,47
A3153-1.15		10	○	DHM	5063042*	11,64
A3153-1.2		10	●	DHM	5063043	10,47
A3153-1.3		10	●	DHM	5063045	11,03
A3153-1.4		10	●	DHM	5063047	11,45
A320M.0.40.110.19		1	●	077	5007596	918,00
A320M.0.50.136.31		1	●	077	5007587	1.043,00
A320M.0.63.180.48		1	●	077	5007588	1.287,00
A320M.0.63.196.60		1	●	077	5007592	1.546,00
A3289DPL-3	DPL	1	●	DSA	5537124	107,00
A3289DPL-3.1	DPL	1	●	DSA	5537125	107,00
A3289DPL-1/8IN	DPL	1	●	DSA	5537126	107,00
A3289DPL-3.2	DPL	1	●	DSA	5537127	107,00
A3289DPL-3.3	DPL	1	●	DSA	5537128	107,00
A3289DPL-3.4	DPL	1	●	DSA	5537129	107,00
A3289DPL-3.5	DPL	1	●	DSA	5537130	107,00
A3289DPL-9/64IN	DPL	1	●	DSA	5537131	107,00
A3289DPL-3.6	DPL	1	●	DSA	5537132	107,00
A3289DPL-3.7	DPL	1	●	DSA	5537133	107,00
A3289DPL-3.8	DPL	1	●	DSA	5537134	107,00
A3289DPL-3.9	DPL	1	●	DSA	5537135	107,00
A3289DPL-5/32IN	DPL	1	●	DSA	5537136	107,00
A3289DPL-4	DPL	1	●	DSA	5537137	107,00
A3289DPL-4.1	DPL	1	●	DSA	5537138	107,00
A3289DPL-4.2	DPL	1	●	DSA	5537139	107,00
A3289DPL-4.3	DPL	1	●	DSA	5537140	107,00
A3289DPL-11/64IN	DPL	1	●	DSA	5537141	107,00
A3289DPL-4.4	DPL	1	●	DSA	5537142	107,00
A3289DPL-4.5	DPL	1	●	DSA	5537143	107,00
A3289DPL-4.6	DPL	1	●	DSA	5537144	107,00
A3289DPL-4.65	DPL	1	●	DSA	5537145	107,00
A3289DPL-4.7	DPL	1	●	DSA	5537146	107,00
A3289DPL-3/16IN	DPL	1	●	DSA	5537147	107,00
A3289DPL-4.8	DPL	1	●	DSA	5537148	107,00
A3289DPL-4.9	DPL	1	●	DSA	5537149	107,00
A3289DPL-5	DPL	1	●	DSA	5537150	107,00
A3289DPL-5.1	DPL	1	●	DSA	5537151	107,00
A3289DPL-13/64IN	DPL	1	●	DSA	5537152	107,00
A3289DPL-5.2	DPL	1	●	DSA	5537153	107,00
A3289DPL-5.3	DPL	1	●	DSA	5537154	107,00
A3289DPL-5.4	DPL	1	●	DSA	5537155	107,00
A3289DPL-5.5	DPL	1	●	DSA	5537156	107,00
A3289DPL-5.55	DPL	1	●	DSA	5537157	107,00
A3289DPL-7/32IN	DPL	1	●	DSA	5537158	107,00
A3289DPL-5.6	DPL	1	●	DSA	5537159	107,00
A3289DPL-5.7	DPL	1	●	DSA	5537160	107,00
A3289DPL-5.8	DPL	1	●	DSA	5537161	107,00
A3289DPL-5.9	DPL	1	●	DSA	5537162	107,00
A3289DPL-15/64IN	DPL	1	●	DSA	5537163	107,00
A3289DPL-6	DPL	1	●	DSA	5537164	107,00
A3289DPL-6.1	DPL	1	●	DSA	5537165	128,00
A3289DPL-6.2	DPL	1	●	DSA	5537166	128,00
A3289DPL-6.3	DPL	1	●	DSA	5537167	128,00
A3289DPL-1/4IN	DPL	1	●	DSA	5537168	128,00
A3289DPL-6.4	DPL	1	●	DSA	5537169	128,00
A3289DPL-6.5	DPL	1	●	DSA	5537170	128,00
A3289DPL-6.6	DPL	1	●	DSA	5537171	128,00
A3289DPL-6.7	DPL	1	●	DSA	5537172	128,00

Bezeichnung / Designation	Sorte / Grade	VE / US		Disc. Gr.	Article No.	EURO Stück / piece
A3289DPL-17/64IN	DPL	1	●	DSA	5537173	128,00
A3289DPL-6.8	DPL	1	●	DSA	5537174	128,00
A3289DPL-6.9	DPL	1	●	DSA	5537175	128,00
A3289DPL-7	DPL	1	●	DSA	5537176	128,00
A3289DPL-7.1	DPL	1	●	DSA	5537177	128,00
A3289DPL-9/32IN	DPL	1	●	DSA	5537178	128,00
A3289DPL-7.2	DPL	1	●	DSA	5537179	128,00
A3289DPL-7.3	DPL	1	●	DSA	5537180	128,00
A3289DPL-7.4	DPL	1	●	DSA	5537181	128,00
A3289DPL-7.5	DPL	1	●	DSA	5537182	128,00
A3289DPL-19/64IN	DPL	1	●	DSA	5537183	128,00
A3289DPL-7.8	DPL	1	●	DSA	5537184	128,00
A3289DPL-7.9	DPL	1	●	DSA	5537185	128,00
A3289DPL-5/16IN	DPL	1	●	DSA	5537186	128,00
A3289DPL-8	DPL	1	●	DSA	5537187	128,00
A3289DPL-8.1	DPL	1	●	DSA	5537188	150,00
A3289DPL-8.2	DPL	1	●	DSA	5537189	150,00
A3289DPL-8.3	DPL	1	●	DSA	5537190	150,00
A3289DPL-21/64IN	DPL	1	●	DSA	5537191	150,00
A3289DPL-8.4	DPL	1	●	DSA	5537192	150,00
A3289DPL-8.5	DPL	1	●	DSA	5537193	150,00
A3289DPL-8.6	DPL	1	●	DSA	5537194	150,00
A3289DPL-8.7	DPL	1	●	DSA	5537195	150,00
A3289DPL-11/32IN	DPL	1	●	DSA	5537196	150,00
A3289DPL-8.8	DPL	1	●	DSA	5537197	150,00
A3289DPL-9	DPL	1	●	DSA	5537198	150,00
A3289DPL-23/64IN	DPL	1	●	DSA	5537199	150,00
A3289DPL-9.2	DPL	1	●	DSA	5537200	150,00
A3289DPL-9.3	DPL	1	●	DSA	5537201	150,00
A3289DPL-9.5	DPL	1	●	DSA	5537202	150,00
A3289DPL-3/8IN	DPL	1	●	DSA	5537203	150,00
A3289DPL-9.6	DPL	1	●	DSA	5537204	150,00
A3289DPL-9.7	DPL	1	●	DSA	5537205	150,00
A3289DPL-9.8	DPL	1	●	DSA	5537206	150,00
A3289DPL-25/64IN	DPL	1	●	DSA	5537207	150,00
A3289DPL-10	DPL	1	●	DSA	5537208	150,00
A3289DPL-10.1	DPL	1	●	DSA	5537209	203,00
A3289DPL-10.2	DPL	1	●	DSA	5537210	203,00
A3289DPL-10.3	DPL	1	●	DSA	5537211	203,00
A3289DPL-13/32IN	DPL	1	●	DSA	5537212	203,00
A3289DPL-10.4	DPL	1	●	DSA	5537213	203,00
A3289DPL-10.5	DPL	1	●	DSA	5537214	203,00
A3289DPL-27/64IN	DPL	1	●	DSA	5537215	203,00
A3289DPL-10.8	DPL	1	●	DSA	5537216	203,00
A3289DPL-11	DPL	1	●	DSA	5537217	203,00
A3289DPL-11.1	DPL	1	●	DSA	5537218	203,00
A3289DPL-7/16IN	DPL	1	●	DSA	5537219	203,00
A3289DPL-11.2	DPL	1	●	DSA	5537221	203,00
A3289DPL-11.5	DPL	1	●	DSA	5537222	203,00
A3289DPL-29/64IN	DPL	1	●	DSA	5537223	203,00
A3289DPL-11.7	DPL	1	●	DSA	5537224	203,00
A3289DPL-11.8	DPL	1	●	DSA	5537225	203,00
A3289DPL-15/32IN	DPL	1	●	DSA	5537226	203,00
A3289DPL-12	DPL	1	●	DSA	5537227	203,00
A3289DPL-12.1	DPL	1	●	DSA	5537228	278,00
A3289DPL-12.2	DPL	1	●	DSA	5537229	278,00
A3289DPL-12.3	DPL	1	●	DSA	5537230	278,00
A3289DPL-31/64IN	DPL	1	●	DSA	5537231	278,00
A3289DPL-12.5	DPL	1	●	DSA	5537232	278,00
A3289DPL-12.6	DPL	1	●	DSA	5537233	278,00
A3289DPL-1/2IN	DPL	1	●	DSA	5537234	278,00
A3289DPL-13	DPL	1	●	DSA	5537235	278,00
A3289DPL-13.3	DPL	1	●	DSA	5537236	278,00
A3289DPL-17/32IN	DPL	1	●	DSA	5537237	278,00
A3289DPL-13.5	DPL	1	●	DSA	5537238	278,00
A3289DPL-14	DPL	1	●	DSA	5537239	278,00
A3289DPL-9/16IN	DPL	1	●	DSA	5537240	363,00
A3289DPL-14.5	DPL	1	●	DSA	5537241	363,00
A3289DPL-15	DPL	1	●	DSA	5537242	363,00
A3289DPL-15.5	DPL	1	●	DSA	5537243	363,00

Bezeichnung / Designation	Sorte / Grade	VE / US		Disc. Gr.	Article No.	EURO Stück / piece
A3289DPL-5/8IN	DPL	1	●	DSA	5537244	**363,00**
A3289DPL-16	DPL	1	●	DSA	5537245	**363,00**
A3289DPL-16.5	DPL	1	●	DSA	5537246	**460,00**
A3289DPL-17	DPL	1	●	DSA	5537247	**460,00**
A3289DPL-17.5	DPL	1	●	DSA	5537248	**460,00**
A3289DPL-18	DPL	1	●	DSA	5537249	**460,00**
A3289DPL-3/4IN	DPL	1	●	DSA	5537250	**556,00**
A3289DPL-20	DPL	1	●	DSA	5537251	**556,00**
A32T-DCLNL12		1	●	060	5522811	**287,00**
A32T-DCLNR12		1	●	060	5522813	**287,00**
A32T-DDUNL11		1	●	060	5522832	**287,00**
A32T-DDUNL15		1	●	060	5522834	**287,00**
A32T-DDUNR11		1	●	060	5522833	**287,00**
A32T-DDUNR15		1	●	060	5522835	**287,00**
A32T-DDXNL11		1	●	060	7807977	**287,00**
A32T-DDXNR11		1	●	060	7807978	**287,00**
A32T-DSKNL12		1	●	060	5522862	**287,00**
A32T-DSKNR12		1	●	060	5522863	**287,00**
A32T-DTFNL16		1	●	060	5522911	**287,00**
A32T-DTFNR16		1	●	060	5522912	**287,00**
A32T-DWLNL06		1	●	060	5522926	**287,00**
A32T-DWLNL08		1	●	060	5522930	**287,00**
A32T-DWLNR06		1	●	060	5522927	**287,00**
A32T-DWLNR08		1	●	060	5522931	**287,00**
A32T-PCLNL12		1	●	060	6038119	**287,00**
A32T-PCLNL16		1	○	060	6038138[1]	**287,00**
A32T-PCLNR12		1	●	060	6038132	**287,00**
A32T-PCLNR16		1	●	060	6038151	**287,00**
A32T-PDUNL11		1	●	060	6039494	**287,00**
A32T-PDUNL15		1	●	060	6039527	**287,00**
A32T-PDUNR11		1	●	060	6039497	**287,00**
A32T-PDUNR15		1	●	060	6039531	**287,00**
A32T-PSKNL12		1	●	060	6038156	**287,00**
A32T-PSKNR12		1	●	060	6038157	**287,00**
A32T-PTFNL16		1	●	060	6039751	**287,00**
A32T-PTFNR16		1	●	060	6039752	**287,00**
A32T-PWLNL06		1	●	060	6039514	**287,00**
A32T-PWLNL08		1	●	060	6039520	**287,00**
A32T-PWLNR06		1	●	060	6039515	**287,00**
A32T-PWLNR08		1	●	060	6039521	**287,00**
A32T-SCLCL12		1	●	060	5194504	**248,00**
A32T-SCLCR12		1	●	060	5194505	**248,00**
A32T-SDUCL11		1	●	060	6344683	**248,00**
A32T-SDUCL11-X		1	●	060	5673653	**248,00**
A32T-SDUCR11		1	●	060	6344696	**248,00**
A32T-SDUCR11-X		1	●	060	5673632	**248,00**
A32T-STFCL16		1	●	060	5194522	**248,00**
A32T-STFCR16		1	●	060	5194523	**248,00**
A32T-SVQBL16		1	●	060	5205426	**248,00**
A32T-SVQBR16		1	●	060	5205428	**248,00**
A32T-SVUBL16		1	●	060	5205493	**248,00**
A32T-SVUBR16		1	●	060	5205494	**248,00**
A32T-SWLCL08		1	●	060	5204706	**248,00**
A32T-SWLCR08		1	●	060	5204707	**248,00**
A32U-DDUNL4		1	●	060	6351550	**392,00**
A32U-DDUNR4		1	●	060	6351551	**392,00**
A32U-DTFNL4		1	●	060	6351552	**392,00**
A32U-DTFNR4		1	●	060	6351553	**392,00**
A331.0.19.025.03		1	●	077	5007556	**123,00**
A331.0.19.025.04		1	●	077	5007532	**123,00**
A331.0.19.025.05		1	●	077	5007533	**123,00**
A331.0.19.025.06		1	●	077	5007534	**123,00**
A331.0.19.025.07		1	●	077	5007535	**123,00**
A331.0.19.025.08		1	●	077	5007536	**123,00**
A331.0.19.025.09		1	●	077	5007537	**123,00**
A331.0.19.025.10		1	●	077	5007538	**123,00**
A331.0.31.034.06		1	●	077	5007539	**169,00**
A331.0.31.034.07		1	●	077	5007540	**169,00**
A331.0.31.034.08		1	●	077	5007541	**169,00**
A331.0.31.034.09		1	●	077	5007542	**169,00**

Bezeichnung / Designation	Sorte / Grade	VE / US		Disc. Gr.	Article No.	EURO Stück / piece
A331.0.31.034.10		1	●	077	5007543	**169,00**
A331.0.31.034.11		1	●	077	5007544	**169,00**
A331.0.31.034.12		1	●	077	5007545	**169,00**
A331.0.31.034.14		1	●	077	5007546	**169,00**
A331.0.31.034.16		1	●	077	5007547	**169,00**
A331.0.48.045.11		1	●	077	5007548	**340,00**
A331.0.48.045.12		1	●	077	5007549	**340,00**
A331.0.48.045.14		1	●	077	5007550	**340,00**
A331.0.48.045.16		1	●	077	5007551	**340,00**
A331.0.48.045.18		1	●	077	5007552	**340,00**
A331.0.48.045.20		1	●	077	5007553	**340,00**
A331.0.48.045.22		1	●	077	5007554	**340,00**
A331.0.48.045.25		1	●	077	5007555	**340,00**
A331.0.60.068.18		1	●	077	5007564	**615,00**
A331.0.60.068.20		1	●	077	5007565	**615,00**
A331.0.60.068.22		1	●	077	5007566	**615,00**
A331.0.60.068.25		1	●	077	5007567	**615,00**
A331.0.60.068.28		1	●	077	5007568	**615,00**
A331.0.60.068.32		1	●	077	5007569	**615,00**
A331.0.60.068.36		1	●	077	5007570	**615,00**
A3367-3		1	●	DS6	5063664	**84,20**
A3367-3.15		1	●	DS6	5063665	**84,20**
A3367-1/8IN		1	●	DS6	5154616	**84,20**
A3367-3.3		1	●	DS6	5063666	**84,20**
A3367-3.5		1	●	DS6	5063667	**84,20**
A3367-3.7		1	●	DS6	5063668	**84,20**
A3367-3.8		1	●	DS6	5063669	**84,20**
A3367-5/32IN		1	●	DS6	5154634	**84,20**
A3367-4		1	●	DS6	5063670	**84,20**
A3367-4.2		1	●	DS6	5063671	**84,20**
A3367-4.3		1	●	DS6	5063672	**84,20**
A3367-4.45		1	●	DS6	5063673	**84,20**
A3367-4.5		1	●	DS6	5063674	**84,20**
A3367-4.65		1	●	DS6	5063675	**84,20**
A3367-3/16IN		1	●	DS6	5154629	**84,20**
A3367-5		1	●	DS6	5063676	**84,20**
A3367-13/64IN		1	●	DS6	5154620	**84,20**
A3367-5.5		1	●	DS6	5063677	**84,20**
A3367-5.55		1	●	DS6	5063678	**84,20**
A3367-5.75		1	●	DS6	5063679	**84,20**
A3367-5.9		1	●	DS6	5063680	**84,20**
A3367-6		1	●	DS6	5063681	**84,20**
A3367-6.55		1	●	DS6	5063683	**101,00**
A3367-17/64IN		1	●	DS6	5154622	**101,00**
A3367-6.8		1	●	DS6	5063684	**101,00**
A3367-7		1	●	DS6	5063685	**101,00**
A3367-7.25		1	●	DS6	5063686	**101,00**
A3367-8		1	●	DS6	5063691	**101,00**
A3367-8.5		1	●	DS6	5063692	**120,00**
A3367-9		1	●	DS6	5063694	**120,00**
A3367-25/64IN		1	●	DS6	5154626	**120,00**
A3367-10		1	●	DS6	5063642	**120,00**
A3367-10.2		1	●	DS6	5063643	**167,00**
A3367-11		1	●	DS6	5063645	**167,00**
A3367-12		1	●	DS6	5063651	**167,00**
A3367-13		1	●	DS6	5063653	**222,00**
A3367-13.5		1	●	DS6	5063656	**222,00**
A3367-15		1	●	DS6	5063659	**302,00**
A3367-16		1	●	DS6	5063663	**302,00**
A3382XPL-3	XPL	1	●	DSA	5834198[2]	**134,00**
A3382XPL-3.3	XPL	1	●	DSA	5834201[2]	**134,00**
A3382XPL-3.5	XPL	1	●	DSA	5834203[2]	**134,00**
A3382XPL-5	XPL	1	●	DSA	5834223[2]	**134,00**
A3382XPL-6	XPL	1	■	DSA	5834237[1]	**134,00**
A3382XPL-6.8	XPL	1	●	DSA	5834245[2]	**160,00**
A3382XPL-7	XPL	1	●	DSA	5834247[2]	**160,00**
A3382XPL-8	XPL	1	●	DSA	5834257[2]	**160,00**
A3382XPL-8.3	XPL	1	■	DSA	5834260[1]	**187,00**
A3382XPL-8.5	XPL	1	●	DSA	5834262[2]	**187,00**
A3382XPL-8.8	XPL	1	●	DSA	5834265[2]	**187,00**

Bezeichnung / Designation	Sorte / Grade	VE / US		Disc. Gr.	Article No.	EURO Stück / piece
A3382XPL-9	XPL	1	●	DSA	5834266[1]	**187,00**
A3382XPL-10.2	XPL	1	●	DSA	5834151[1]	**254,00**
A3382XPL-10.5	XPL	1	●	DSA	5834154[1]	**254,00**
A3382XPL-11	XPL	1	■	DSA	5834156[2]	**254,00**
A3382XPL-11.1	XPL	1	●	DSA	5834157[1]	**254,00**
A3382XPL-12	XPL	1	■	DSA	5834164[2]	**254,00**
A3382XPL-14	XPL	1	●	DSA	5834175[1]	**347,00**
A3382XPL-14.5	XPL	1	■	DSA	5834176[2]	**454,00**
A3382XPL-16	XPL	1	■	DSA	5834182[2]	**454,00**
A3382XPL-17.5	XPL	1	●	DSA	5834185[1]	**574,00**
A3382XPL-19	XPL	1	■	DSA	5834190[2]	**695,00**
A3389AML-2	AML	1	■	DSA	5928633[2]	**133,00**
A3389AML-2.05	AML	1	■	DSA	5932096[2]	**133,00**
A3389AML-2.1	AML	1	■	DSA	5932097[2]	**133,00**
A3389AML-2.15	AML	1	■	DSA	5932098[2]	**133,00**
A3389AML-2.2	AML	1	■	DSA	5932099[2]	**133,00**
A3389AML-2.25	AML	1	■	DSA	5932100[2]	**133,00**
A3389AML-2.3	AML	1	■	DSA	5932101[2]	**133,00**
A3389AML-2.35	AML	1	■	DSA	5932102[2]	**133,00**
A3389AML-3/32IN	AML	1	■	DSA	5932103[2]	**133,00**
A3389AML-2.4	AML	1	■	DSA	5932104[2]	**133,00**
A3389AML-2.45	AML	1	■	DSA	5932105[2]	**133,00**
A3389AML-2.5	AML	1	■	DSA	5932106[2]	**133,00**
A3389AML-2.55	AML	1	■	DSA	5932107[2]	**133,00**
A3389AML-2.6	AML	1	■	DSA	5932108[2]	**133,00**
A3389AML-2.65	AML	1	■	DSA	5932109[2]	**133,00**
A3389AML-2.7	AML	1	■	DSA	5932110[2]	**133,00**
A3389AML-2.75	AML	1	■	DSA	5932111[2]	**133,00**
A3389AML-7/64IN	AML	1	■	DSA	5932112[2]	**133,00**
A3389AML-2.8	AML	1	■	DSA	5932113[2]	**133,00**
A3389AML-2.85	AML	1	■	DSA	5932114[2]	**133,00**
A3389AML-2.9	AML	1	■	DSA	5932115[2]	**133,00**
A3389AML-2.95	AML	1	■	DSA	5932116[2]	**133,00**
A3389DPL-3	DPL	1	●	DSA	5337001	**134,00**
A3389DPL-3.1	DPL	1	●	DSA	5337002	**134,00**
A3389DPL-1/8IN	DPL	1	●	DSA	5337003	**134,00**
A3389DPL-3.2	DPL	1	●	DSA	5337004	**134,00**
A3389DPL-3.25	DPL	1	●	DSA	6673202	**134,00**
A3389DPL-3.3	DPL	1	●	DSA	5337005	**134,00**
A3389DPL-3.4	DPL	1	●	DSA	5337006	**134,00**
A3389DPL-3.5	DPL	1	●	DSA	5337007	**134,00**
A3389DPL-9/64IN	DPL	1	●	DSA	5337008	**134,00**
A3389DPL-3.6	DPL	1	●	DSA	5337009	**134,00**
A3389DPL-3.7	DPL	1	●	DSA	5337010	**134,00**
A3389DPL-3.8	DPL	1	●	DSA	5337011	**134,00**
A3389DPL-3.9	DPL	1	●	DSA	5337012	**134,00**
A3389DPL-5/32IN	DPL	1	●	DSA	5337013	**134,00**
A3389DPL-4	DPL	1	●	DSA	5337014	**134,00**
A3389DPL-4.1	DPL	1	●	DSA	5337015	**134,00**
A3389DPL-4.2	DPL	1	●	DSA	5337016	**134,00**
A3389DPL-4.3	DPL	1	●	DSA	5337017	**134,00**
A3389DPL-11/64IN	DPL	1	●	DSA	5337018	**134,00**
A3389DPL-4.4	DPL	1	●	DSA	5337019	**134,00**
A3389DPL-4.5	DPL	1	●	DSA	5337020	**134,00**
A3389DPL-4.6	DPL	1	●	DSA	5337021	**134,00**
A3389DPL-4.65	DPL	1	●	DSA	5337022	**134,00**
A3389DPL-4.7	DPL	1	●	DSA	5337023	**134,00**
A3389DPL-3/16IN	DPL	1	●	DSA	5337024	**134,00**
A3389DPL-4.8	DPL	1	●	DSA	5337025	**134,00**
A3389DPL-4.9	DPL	1	●	DSA	5337026	**134,00**
A3389DPL-5	DPL	1	●	DSA	5337027	**134,00**
A3389DPL-5.1	DPL	1	●	DSA	5337028	**134,00**
A3389DPL-13/64IN	DPL	1	●	DSA	5337029	**134,00**
A3389DPL-5.2	DPL	1	●	DSA	5337030	**134,00**
A3389DPL-5.3	DPL	1	●	DSA	5337031	**134,00**
A3389DPL-5.4	DPL	1	●	DSA	5337032	**134,00**
A3389DPL-5.5	DPL	1	●	DSA	5337033	**134,00**
A3389DPL-5.55	DPL	1	●	DSA	5337034	**134,00**
A3389DPL-7/32IN	DPL	1	●	DSA	5337035	**134,00**
A3389DPL-5.6	DPL	1	●	DSA	5337036	**134,00**

Bezeichnung / Designation	Sorte / Grade	VE / US		Disc. Gr.	Article No.	EURO Stück / piece
A3389DPL-5.7	DPL	1	●	DSA	5337037	**134,00**
A3389DPL-5.8	DPL	1	●	DSA	5337038	**134,00**
A3389DPL-5.9	DPL	1	●	DSA	5337039	**134,00**
A3389DPL-15/64IN	DPL	1	●	DSA	5337040	**134,00**
A3389DPL-6	DPL	1	●	DSA	5337041	**134,00**
A3389DPL-6.1	DPL	1	●	DSA	5337042	**160,00**
A3389DPL-6.2	DPL	1	●	DSA	5337043	**160,00**
A3389DPL-6.3	DPL	1	●	DSA	5337044	**160,00**
A3389DPL-1/4IN	DPL	1	●	DSA	5337045	**160,00**
A3389DPL-6.4	DPL	1	●	DSA	5337046	**160,00**
A3389DPL-6.5	DPL	1	●	DSA	5337047	**160,00**
A3389DPL-6.6	DPL	1	●	DSA	5337048	**160,00**
A3389DPL-6.7	DPL	1	●	DSA	5337049	**160,00**
A3389DPL-17/64IN	DPL	1	●	DSA	5337050	**160,00**
A3389DPL-6.8	DPL	1	●	DSA	5337051	**160,00**
A3389DPL-6.9	DPL	1	●	DSA	5337052	**160,00**
A3389DPL-7	DPL	1	●	DSA	5337053	**160,00**
A3389DPL-7.1	DPL	1	●	DSA	5337054	**160,00**
A3389DPL-9/32IN	DPL	1	●	DSA	5337055	**160,00**
A3389DPL-7.2	DPL	1	●	DSA	5337056	**160,00**
A3389DPL-7.3	DPL	1	●	DSA	5337057	**160,00**
A3389DPL-7.4	DPL	1	●	DSA	5337058	**160,00**
A3389DPL-7.5	DPL	1	●	DSA	5337059	**160,00**
A3389DPL-19/64IN	DPL	1	●	DSA	5337060	**160,00**
A3389DPL-7.55	DPL	1	●	DSA	6673203	**160,00**
A3389DPL-7.8	DPL	1	●	DSA	5337061	**160,00**
A3389DPL-7.9	DPL	1	●	DSA	5337062	**160,00**
A3389DPL-5/16IN	DPL	1	●	DSA	5337063	**160,00**
A3389DPL-8	DPL	1	●	DSA	5337064	**160,00**
A3389DPL-8.1	DPL	1	●	DSA	5337065	**187,00**
A3389DPL-8.2	DPL	1	●	DSA	5337066	**187,00**
A3389DPL-8.3	DPL	1	●	DSA	5337067	**187,00**
A3389DPL-21/64IN	DPL	1	●	DSA	5337068	**187,00**
A3389DPL-8.4	DPL	1	●	DSA	5337069	**187,00**
A3389DPL-8.5	DPL	1	●	DSA	5337070	**187,00**
A3389DPL-8.6	DPL	1	●	DSA	5337071	**187,00**
A3389DPL-8.7	DPL	1	●	DSA	5337072	**187,00**
A3389DPL-11/32IN	DPL	1	●	DSA	5337073	**187,00**
A3389DPL-8.75	DPL	1	●	DSA	6673204	**187,00**
A3389DPL-8.8	DPL	1	●	DSA	5337074	**187,00**
A3389DPL-9	DPL	1	●	DSA	5337075	**187,00**
A3389DPL-23/64IN	DPL	1	●	DSA	5337076	**187,00**
A3389DPL-9.2	DPL	1	●	DSA	5337077	**187,00**
A3389DPL-9.3	DPL	1	●	DSA	5337078	**187,00**
A3389DPL-9.5	DPL	1	●	DSA	5337079	**187,00**
A3389DPL-3/8IN	DPL	1	●	DSA	5337080	**187,00**
A3389DPL-9.6	DPL	1	●	DSA	5337081	**187,00**
A3389DPL-9.7	DPL	1	●	DSA	5337082	**187,00**
A3389DPL-9.8	DPL	1	●	DSA	5337083	**187,00**
A3389DPL-9.9	DPL	1	●	DSA	5932254	**187,00**
A3389DPL-25/64IN	DPL	1	●	DSA	5337084	**187,00**
A3389DPL-10	DPL	1	●	DSA	5337085	**187,00**
A3389DPL-10.1	DPL	1	●	DSA	5337086	**254,00**
A3389DPL-10.2	DPL	1	●	DSA	5337087	**254,00**
A3389DPL-10.3	DPL	1	●	DSA	5337088	**254,00**
A3389DPL-13/32IN	DPL	1	●	DSA	5337089	**254,00**
A3389DPL-10.4	DPL	1	●	DSA	5337090	**254,00**
A3389DPL-10.5	DPL	1	●	DSA	5337091	**254,00**
A3389DPL-27/64IN	DPL	1	●	DSA	5337092	**254,00**
A3389DPL-10.8	DPL	1	●	DSA	5337093	**254,00**
A3389DPL-11	DPL	1	●	DSA	5337094	**254,00**
A3389DPL-11.1	DPL	1	●	DSA	5337095	**254,00**
A3389DPL-7/16IN	DPL	1	●	DSA	5337096	**254,00**
A3389DPL-11.2	DPL	1	●	DSA	5337097	**254,00**
A3389DPL-11.3	DPL	1	●	DSA	6673205	**254,00**
A3389DPL-11.4	DPL	1	●	DSA	6673206	**254,00**
A3389DPL-11.5	DPL	1	●	DSA	5337098	**254,00**
A3389DPL-29/64IN	DPL	1	●	DSA	5337099	**254,00**
A3389DPL-11.7	DPL	1	●	DSA	5337100	**254,00**
A3389DPL-11.8	DPL	1	●	DSA	5337101	**254,00**

Bezeichnung / Designation	Sorte / Grade	VE / US		Disc. Gr.	Article No.	EURO Stück / piece
A3389DPL-15/32IN	DPL	1	●	DSA	5337102	**254,00**
A3389DPL-12	DPL	1	●	DSA	5337103	**254,00**
A3389DPL-12.1	DPL	1	●	DSA	5337104	**347,00**
A3389DPL-12.2	DPL	1	●	DSA	5337105	**347,00**
A3389DPL-12.3	DPL	1	●	DSA	5337106	**347,00**
A3389DPL-31/64IN	DPL	1	●	DSA	5337107	**347,00**
A3389DPL-12.5	DPL	1	●	DSA	5337108	**347,00**
A3389DPL-12.6	DPL	1	●	DSA	5337109	**347,00**
A3389DPL-1/2IN	DPL	1	●	DSA	5337110	**347,00**
A3389DPL-13	DPL	1	●	DSA	5337111	**347,00**
A3389DPL-13.1	DPL	1	●	DSA	6673207	**347,00**
A3389DPL-13.3	DPL	1	●	DSA	5337112	**347,00**
A3389DPL-17/32IN	DPL	1	●	DSA	5337113	**347,00**
A3389DPL-13.5	DPL	1	●	DSA	5337114	**347,00**
A3389DPL-14	DPL	1	●	DSA	5337115	**347,00**
A3389DPL-9/16IN	DPL	1	●	DSA	5337116	**454,00**
A3389DPL-14.5	DPL	1	●	DSA	5337117	**454,00**
A3389DPL-15	DPL	1	●	DSA	5337118	**454,00**
A3389DPL-15.1	DPL	1	●	DSA	6673208	**454,00**
A3389DPL-15.3	DPL	1	●	DSA	6673209	**454,00**
A3389DPL-15.5	DPL	1	●	DSA	5337119	**454,00**
A3389DPL-5/8IN	DPL	1	●	DSA	5337120	**454,00**
A3389DPL-16	DPL	1	●	DSA	5337121	**454,00**
A3389DPL-16.5	DPL	1	●	DSA	5337122	**574,00**
A3389DPL-17	DPL	1	●	DSA	5337123	**574,00**
A3389DPL-17.5	DPL	1	●	DSA	5337124	**574,00**
A3389DPL-18	DPL	1	●	DSA	5337125	**574,00**
A3389DPL-18.5	DPL	1	●	DSA	5930443	**695,00**
A3389DPL-19	DPL	1	●	DSA	5930444	**695,00**
A3389DPL-3/4IN	DPL	1	●	DSA	5337126	**695,00**
A3389DPL-20	DPL	1	●	DSA	5337127	**695,00**
A3486TIP-5	TIP	1	●	DS6	5064174	**260,00**
A3486TIP-5.2	TIP	1	■	DS6	5064176*	**260,00**
A3486TIP-5.5	TIP	1	●	DS6	5064177	**260,00**
A3486TIP-5.8	TIP	1	■	DS6	5064178*	**260,00**
A3486TIP-6	TIP	1	●	DS6	5064179	**260,00**
A3486TIP-6.1	TIP	1	●	DS6	5064180	**312,00**
A3486TIP-6.5	TIP	1	●	DS6	5064181	**312,00**
A3486TIP-6.6	TIP	1	■	DS6	5064182*	**312,00**
A3486TIP-6.8	TIP	1	●	DS6	5064183	**312,00**
A3486TIP-7	TIP	1	●	DS6	5064184	**312,00**
A3486TIP-7.5	TIP	1	■	DS6	5064185*	**312,00**
A3486TIP-7.8	TIP	1	■	DS6	5064186*	**312,00**
A3486TIP-8	TIP	1	●	DS6	5064187	**312,00**
A3486TIP-8.5	TIP	1	■	DS6	5064189*	**364,00**
A3486TIP-9	TIP	1	■	DS6	5064190*	**364,00**
A40T-DCLNL12		1	●	060	5522814	**321,00**
A40T-DCLNL16		1	●	060	5522817	**321,00**
A40T-DCLNR12		1	●	060	5522815	**321,00**
A40T-DCLNR16		1	●	060	5522816	**321,00**
A40T-DDUNL15		1	●	060	5522836	**321,00**
A40T-DDUNR15		1	●	060	5522837	**321,00**
A40T-DDXNL15		1	●	060	7807979	**321,00**
A40T-DDXNR15		1	●	060	7807980	**321,00**
A40T-DSKNL12		1	●	060	5522865	**321,00**
A40T-DSKNL15		1	●	060	5522867	**321,00**
A40T-DSKNR12		1	●	060	5522866	**321,00**
A40T-DSKNR15		1	●	060	5522868	**321,00**
A40T-DTFNL16		1	●	060	5522913	**321,00**
A40T-DTFNL22		1	●	060	5522916	**321,00**
A40T-DTFNR16		1	●	060	5522915	**321,00**
A40T-DTFNR22		1	●	060	5522917	**321,00**
A40T-DVUNL16		1	●	060	5522922	**321,00**
A40T-DVUNR16		1	●	060	5522923	**321,00**
A40T-DWLNL08		1	●	060	5522932	**321,00**
A40T-DWLNL10		1	●	060	5522936	**321,00**
A40T-DWLNR08		1	●	060	5522933	**321,00**
A40T-DWLNR10		1	●	060	5522937	**321,00**
A40T-PCLNL12		1	●	060	5016170	**321,00**
A40T-PCLNL16		1	●	060	5016174	**321,00**

Bezeichnung / Designation	Sorte / Grade	VE / US		Disc. Gr.	Article No.	EURO Stück / piece
A40T-PCLNR12		1	●	060	5016171	**321,00**
A40T-PCLNR16		1	●	060	5016175	**321,00**
A40T-PDUNL11		1	●	060	5008062	**321,00**
A40T-PDUNL15		1	●	060	6039503	**321,00**
A40T-PDUNR11		1	●	060	5008065	**321,00**
A40T-PDUNR15		1	●	060	6039504	**321,00**
A40T-SVQBL16		1	●	060	5205429	**283,00**
A40T-SVQBR16		1	●	060	5205470	**283,00**
A40T-SVUBL16		1	●	060	5205495	**283,00**
A40T-SVUBR16		1	●	060	5205496	**283,00**
A4244-10		1	●	DH4	5065824	**81,70**
A4244-10.2		1	●	DH4	5065825	**90,20**
A4244-10.5		1	●	DH4	5065826	**86,60**
A4244-10.8		1	●	DH4	5065827	**108,00**
A4244-11		1	●	DH4	5065828	**90,80**
A4244-11.2		1	●	DH4	5065829	**108,00**
A4244-11.5		1	●	DH4	5065830	**102,00**
A4244-11.8		1	●	DH4	5065831	**117,00**
A4244-12		1	●	DH4	5065832	**94,50**
A4244-12.2		1	●	DH4	5065833	**118,00**
A4244-12.5		1	●	DH4	5065834	**85,70**
A4244-12.8		1	●	DH4	5065835	**124,00**
A4244-13		1	●	DH4	5065836	**95,50**
A4244-13.5		1	●	DH4	5065838	**105,00**
A4244-13.8		1	●	DH4	5065839	**171,00**
A4244-14		1	●	DH4	5065840	**114,00**
A4244-14.25		1	●	DH4	5065841	**157,00**
A4244-14.5		1	●	DH4	5065842	**123,00**
A4244-14.75		1	●	DH4	5065843	**155,00**
A4244-15		1	●	DH4	5065844	**131,00**
A4244-15.25		1	●	DH4	5065845	**155,00**
A4244-15.5		1	●	DH4	5065846	**140,00**
A4244-15.75		1	●	DH4	5065847	**161,00**
A4244-16		1	●	DH4	5065848	**148,00**
A4244-16.5		1	●	DH4	5065850	**157,00**
A4244-16.75		1	●	DH4	5065851	**185,00**
A4244-17		1	●	DH4	5065852	**165,00**
A4244-17.25		1	●	DH4	5065853	**195,00**
A4244-17.5		1	●	DH4	5065854	**174,00**
A4244-17.75		1	●	DH4	5065855	**205,00**
A4244-18		1	●	DH4	5065856	**183,00**
A4244-18.25		1	●	DH4	5065857	**215,00**
A4244-18.5		1	●	DH4	5065858	**191,00**
A4244-18.75		1	●	DH4	5065859	**225,00**
A4244-19		1	●	DH4	5065860	**200,00**
A4244-19.25		1	●	DH4	5065861	**235,00**
A4244-19.5		1	●	DH4	5065862	**208,00**
A4244-19.75		1	●	DH4	5065863	**244,00**
A4244-20		1	●	DH4	5065864	**217,00**
A4244-20.25		1	●	DH4	5065865	**260,00**
A4244-20.5		1	●	DH4	5065866	**236,00**
A4244-20.75		1	●	DH4	5065867	**278,00**
A4244-21		1	●	DH4	5065868	**247,00**
A4244-21.25		1	●	DH4	5065869	**310,00**
A4244-21.5		1	●	DH4	5065870	**259,00**
A4244-22		1	●	DH4	5065872	**271,00**
A4244-22.25		1	●	DH4	5065873	**329,00**
A4244-22.5		1	●	DH4	5065874	**283,00**
A4244-22.75		1	●	DH4	5065875	**344,00**
A4244-23		1	●	DH4	5065876	**294,00**
A4244-23.5		1	●	DH4	5065877	**306,00**
A4244-24		1	●	DH4	5065878	**318,00**
A4244-24.5		1	●	DH4	5065879	**330,00**
A4244-25		1	●	DH4	5065880	**342,00**
A4244-25.5		1	●	DH4	5065881	**390,00**
A4244-26		1	●	DH4	5065882	**350,00**
A4244-26.5		1	●	DH4	5065883	**410,00**
A4244-27		1	●	DH4	5065884	**390,00**
A4244-28		1	●	DH4	5065886	**437,00**
A4244-29		1	●	DH4	5065888	**456,00**

Bezeichnung / Designation	Sorte / Grade	VE / US		Disc. Gr.	Article No.	EURO Stück / piece
A4244-29.5		1	●	DH4	5065889	530,00
A4244-30		1	●	DH4	5065890	476,00
A4244-30.5		1	●	DH4	5065891	607,00
A4244-31		1	●	DH4	5065892	502,00
A4244-31.5		1	●	DH4	5065893	582,00
A4244-32		1	●	DH4	5065894	522,00
A4247-10		1	●	DH4	5065895	81,70
A4247-10.2		1	●	DH4	5065896	90,20
A4247-10.5		1	●	DH4	5065897	86,60
A4247-10.8		1	●	DH4	5065898	108,00
A4247-11		1	●	DH4	5065899	90,80
A4247-11.5		1	●	DH4	5065901	102,00
A4247-11.8		1	●	DH4	5065902	117,00
A4247-12		1	●	DH4	5065903	94,50
A4247-12.2		1	●	DH4	5065904	118,00
A4247-12.5		1	●	DH4	5065905	85,70
A4247-12.8		1	●	DH4	5065906	124,00
A4247-13		1	●	DH4	5065907	95,50
A4247-13.2		1	●	DH4	5065908	139,00
A4247-13.5		1	●	DH4	5065909	105,00
A4247-13.8		1	●	DH4	5065910	171,00
A4247-14		1	●	DH4	5065911	114,00
A4247-14.25		1	●	DH4	5065912	157,00
A4247-14.5		1	●	DH4	5065913	123,00
A4247-14.75		1	●	DH4	5065914	155,00
A4247-15		1	●	DH4	5065915	131,00
A4247-15.25		1	●	DH4	5065916	155,00
A4247-15.5		1	●	DH4	5065917	133,00
A4247-15.75		1	●	DH4	5065918	161,00
A4247-16		1	●	DH4	5065919	139,00
A4247-16.25		1	●	DH4	5065920	163,00
A4247-16.5		1	●	DH4	5065921	143,00
A4247-16.75		1	●	DH4	5065922	165,00
A4247-17		1	●	DH4	5065923	144,00
A4247-17.25		1	●	DH4	5065924	195,00
A4247-17.5		1	●	DH4	5065925	174,00
A4247-17.75		1	●	DH4	5065926	168,00
A4247-18		1	●	DH4	5065927	183,00
A4247-18.25		1	●	DH4	5065928	215,00
A4247-18.5		1	●	DH4	5065929	156,00
A4247-18.75		1	●	DH4	5065930	225,00
A4247-19		1	●	DH4	5065931	160,00
A4247-19.25		1	●	DH4	5065932	185,00
A4247-19.5		1	●	DH4	5065933	173,00
A4247-19.75		1	●	DH4	5065934	202,00
A4247-20		1	●	DH4	5065935	217,00
A4247-20.25		1	●	DH4	5065936	235,00
A4247-20.5		1	●	DH4	5065937	236,00
A4247-20.75		1	●	DH4	5065938	278,00
A4247-21		1	●	DH4	5065939	247,00
A4247-21.25		1	●	DH4	5065940	310,00
A4247-21.5		1	●	DH4	5065941	241,00
A4247-21.75		1	●	DH4	5065942	329,00
A4247-22		1	●	DH4	5065943	234,00
A4247-22.25		1	●	DH4	5065944	329,00
A4247-22.5		1	●	DH4	5065945	285,00
A4247-22.75		1	●	DH4	5065946	344,00
A4247-23		1	●	DH4	5065947	265,00
A4247-23.5		1	●	DH4	5065948	293,00
A4247-24		1	●	DH4	5065949	299,00
A4247-24.5		1	●	DH4	5065950	313,00
A4247-25		1	●	DH4	5065951	299,00
A4247-25.5		1	●	DH4	5065952	390,00
A4247-26		1	●	DH4	5065953	350,00
A4247-26.5		1	●	DH4	5065954	410,00
A4247-27		1	●	DH4	5065955	390,00
A4247-27.5		1	●	DH4	5065956	429,00
A4247-28		1	●	DH4	5065957	437,00
A4247-28.5		1	●	DH4	5065958	502,00
A4247-29		1	●	DH4	5065959	456,00

Bezeichnung / Designation	Sorte / Grade	VE / US		Disc. Gr.	Article No.	EURO Stück / piece
A4247-29.5		1	●	DH4	5065960	530,00
A4247-30		1	●	DH4	5065961	476,00
A4247-30.5		1	●	DH4	5065962	607,00
A4247-31		1	●	DH4	5065963	502,00
A4247-31.5		1	●	DH4	5065964	582,00
A4247-32		1	●	DH4	5065965	522,00
A4247-32.5		1	●	DH4	5065966	730,00
A4247-33		1	●	DH4	5065967	640,00
A4247-34		1	●	DH4	5065969	677,00
A4247-35		1	●	DH4	5065971	720,00
A4247-36		1	●	DH4	5065972	803,00
A4247-37		1	●	DH4	5065973	835,00
A4247-38		1	●	DH4	5065974	1.036,00
A4247-39		1	●	DH4	5065975	1.061,00
A4247-40		1	●	DH4	5065976	1.070,00
A4422-10		1	●	DH8	5066138	64,00
A4422-10.2		1	●	DH8	5066139	73,30
A4422-10.5		1	●	DH8	5066140	67,90
A4422-10.8		1	●	DH8	5066141	78,10
A4422-11		1	●	DH8	5066142	68,30
A4422-11.2		1	■	DH8	5066143*	82,00
A4422-11.5		1	●	DH8	5066144	78,10
A4422-11.8		1	●	DH8	5066145	82,50
A4422-12		1	●	DH8	5066146	76,20
A4422-12.2		1	●	DH8	5066147	86,40
A4422-12.5		1	●	DH8	5066148	63,10
A4422-12.8		1	●	DH8	5066149	89,30
A4422-13		1	●	DH8	5066150	70,40
A4422-13.2		1	●	DH8	5066151	93,30
A4422-13.5		1	●	DH8	5066152	77,70
A4422-13.8		1	●	DH8	5066153	101,00
A4422-14		1	●	DH8	5066154	84,00
A4422-14.25		1	●	DH8	5066155	125,00
A4422-14.5		1	●	DH8	5066156	90,30
A4422-14.75		1	●	DH8	5066157	126,00
A4422-15		1	●	DH8	5066158	96,70
A4422-15.25		1	●	DH8	5066159	130,00
A4422-15.5		1	●	DH8	5066160	103,00
A4422-15.75		1	●	DH8	5066161	130,00
A4422-16		1	●	DH8	5066162	109,00
A4422-16.25		1	■	DH8	5066163*	145,00
A4422-16.5		1	●	DH8	5066164	116,00
A4422-16.75		1	●	DH8	5066165	153,00
A4422-17		1	●	DH8	5066166	122,00
A4422-17.5		1	●	DH8	5066168	128,00
A4422-17.75		1	●	DH8	5066169	159,00
A4422-18		1	●	DH8	5066170	135,00
A4422-18.25		1	●	DH8	5066171	161,00
A4422-18.5		1	●	DH8	5066172	141,00
A4422-18.75		1	●	DH8	5066173	166,00
A4422-19		1	●	DH8	5066174	147,00
A4422-19.25		1	●	DH8	5066175	183,00
A4422-19.5		1	●	DH8	5066176	153,00
A4422-19.75		1	●	DH8	5066177	184,00
A4422-20		1	●	DH8	5066178	160,00
A4422-20.5		1	●	DH8	5066179	194,00
A4422-21		1	●	DH8	5066180	204,00
A4422-21.5		1	●	DH8	5066181	214,00
A4422-22		1	●	DH8	5066182	223,00
A4422-22.5		1	●	DH8	5066183	233,00
A4422-23		1	●	DH8	5066184	243,00
A4422-23.5		1	●	DH8	5066185	253,00
A4422-24		1	●	DH8	5066186	262,00
A4422-24.5		1	●	DH8	5066187	272,00
A4422-25		1	●	DH8	5066188	282,00
A4422-26		1	●	DH8	5066189	278,00
A4422-27		1	●	DH8	5066190	307,00
A4422-28		1	●	DH8	5066191	317,00
A4422-29		1	●	DH8	5066192	365,00
A4422-30		1	●	DH8	5066193	376,00

Bezeichnung / Designation	Sorte / Grade	VE / US		Disc. Gr.	Article No.	EURO Stück / piece
A4422-31		1	●	DH8	5066194	450,00
A4611-8		1	●	DH4	5066274	90,60
A4611-9		1	●	DH4	5066276	92,80
A4611-10		1	●	DH4	5066221	93,90
A4611-10.5		1	●	DH4	5066222	108,00
A4611-11		1	●	DH4	5066223	107,00
A4611-11.5		1	●	DH4	5066224	117,00
A4611-14		1	●	DH4	5066229	129,00
A4611-15		1	●	DH4	5066231	148,00
A4611-15.5		1	●	DH4	5066232	158,00
A4611-16		1	●	DH4	5066233	167,00
A4611-16.5		1	●	DH4	5066234	177,00
A4611-17		1	●	DH4	5066235	187,00
A4611-17.5		1	●	DH4	5066236	196,00
A4611-18		1	●	DH4	5066237	206,00
A4611-19		1	●	DH4	5066239	225,00
A4611-19.5		1	●	DH4	5066240	235,00
A4611-20		1	●	DH4	5066241	245,00
A4611-20.5		1	●	DH4	5066242	258,00
A4611-21		1	●	DH4	5066243	271,00
A4611-21.5		1	●	DH4	5066244	284,00
A4611-22		1	●	DH4	5066245	297,00
A4611-22.5		1	●	DH4	5066246	310,00
A4611-23		1	●	DH4	5066247	323,00
A4611-23.5		1	●	DH4	5066248	336,00
A4611-24		1	●	DH4	5066249	349,00
A4611-24.5		1	●	DH4	5066250	362,00
A4611-25		1	●	DH4	5066251	375,00
A4611-25.5		1	●	DH4	5066252	400,00
A4611-26		1	●	DH4	5066253	425,00
A4611-26.5		1	●	DH4	5066254	440,00
A4611-27		1	●	DH4	5066255	454,00
A4611-28		1	●	DH4	5066256	485,00
A4611-29		1	●	DH4	5066257	516,00
A4611-30		1	●	DH4	5066258	546,00
A4611-31		1	●	DH4	5066259	576,00
A4611-32		1	●	DH4	5066260	621,00
A4611-33		1	●	DH4	5066261	664,00
A4611-34		1	●	DH4	5066262	702,00
A4611-35		1	●	DH4	5066263	740,00
A4611-38		1	●	DH4	5066266	923,00
A4611-39		1	●	DH4	5066267	948,00
A4611-40		1	●	DH4	5066268	1.003,00
A4622-12		1	●	DH8	5066278	117,00
A4622-12.5		1	●	DH8	5066279	90,30
A4622-13		1	●	DH8	5066280	101,00
A4622-13.5		1	●	DH8	5066281	111,00
A4622-14		1	●	DH8	5066282	120,00
A4622-14.5		1	●	DH8	5066283	129,00
A4622-15		1	●	DH8	5066284	138,00
A4622-15.5		1	●	DH8	5066285	147,00
A4622-16		1	●	DH8	5066286	156,00
A4622-16.5		1	●	DH8	5066287	165,00
A4622-17		1	●	DH8	5066288	174,00
A4622-17.5		1	●	DH8	5066289	183,00
A4622-18		1	●	DH8	5066290	192,00
A4622-18.5		1	●	DH8	5066291	201,00
A4622-19		1	●	DH8	5066292	210,00
A4622-19.5		1	●	DH8	5066293	219,00
A4622-20		1	●	DH8	5066294	229,00
A4622-21		1	●	DH8	5066295	292,00
A4622-22		1	●	DH8	5066296	320,00
A4622-23		1	●	DH8	5066297	347,00
A4622-24		1	●	DH8	5066298	375,00
A4622-25		1	●	DH8	5066299	403,00
A4622-26		1	●	DH8	5066300	422,00
A4622-27		1	●	DH8	5066301	438,00
A4622-28		1	●	DH8	5066302	454,00
A4622-29		1	●	DH8	5066303	499,00
A4622-30		1	●	DH8	5066304	528,00

Bezeichnung / Designation	Sorte / Grade	VE / US		Disc. Gr.	Article No.	EURO Stück / piece
A4722-8		1	●	DH8	5066343	138,00
A4722-8.5		1	●	DH8	5066344	143,00
A4722-9		1	●	DH8	5066345	156,00
A4722-10		1	●	DH8	5066305	163,00
A4722-10.5		1	●	DH8	5066306	179,00
A4722-11		1	●	DH8	5066307	175,00
A4722-11.5		1	●	DH8	5066308	179,00
A4722-12		1	●	DH8	5066309	185,00
A4722-12.5		1	●	DH8	5066310	125,00
A4722-13		1	●	DH8	5066311	139,00
A4722-13.5		1	●	DH8	5066312	154,00
A4722-14		1	●	DH8	5066313	166,00
A4722-14.5		1	●	DH8	5066314	179,00
A4722-15		1	●	DH8	5066315	191,00
A4722-15.5		1	●	DH8	5066316	204,00
A4722-16		1	●	DH8	5066317	216,00
A4722-16.5		1	●	DH8	5066318	229,00
A4722-17		1	●	DH8	5066319	241,00
A4722-17.5		1	●	DH8	5066320	254,00
A4722-18		1	●	DH8	5066321	266,00
A4722-18.5		1	●	DH8	5066322	279,00
A4722-19		1	●	DH8	5066323	291,00
A4722-19.5		1	●	DH8	5066324	304,00
A4722-20		1	●	DH8	5066325	316,00
A4722-21		1	●	DH8	5066326	404,00
A4722-22		1	●	DH8	5066327	442,00
A4722-23		1	●	DH8	5066328	481,00
A4722-24		1	●	DH8	5066329	519,00
A4722-25		1	●	DH8	5066330	558,00
A4722-26		1	●	DH8	5066331	587,00
A4722-27		1	●	DH8	5066332	617,00
A4722-28		1	●	DH8	5066333	652,00
A4722-29		1	●	DH8	5066334	673,00
A4722-30		1	●	DH8	5066335	730,00
A4722-32		1	●	DH8	5066337	890,00
A4722-33		1	●	DH8	5066338	956,00
A4722-34		1	●	DH8	5066339	1.027,00
A4722-35		1	●	DH8	5066340	1.087,00
A4722-38		1	●	DH8	5066341	1.224,00
A4722-40		1	●	DH8	5066342	1.406,00
A50U-DCLNL16		1	●	060	5522818	390,00
A50U-DCLNR16		1	●	060	5522819	390,00
A50U-DDUNL15		1	●	060	5522838	390,00
A50U-DDUNR15		1	●	060	5522839	390,00
A50U-DTFNL22		1	●	060	5522918	390,00
A50U-DTFNR22		1	●	060	5522919	390,00
A50U-DWLNL08		1	●	060	5522934	390,00
A50U-DWLNR08		1	●	060	5522935	390,00
A510.Z10.T09.070-CS		1	●	070	5015995	383,00
A510.Z12.T09.120-CS		1	●	070	5015996	479,00
A510.Z16.T14.070-CS		1	●	070	5015997	460,00
A510.Z16.T14.120-CS		1	●	070	5007244	523,00
A510.Z20.T18.070-CS		1	●	070	5015998	575,00
A510.Z20.T18.123-CS		1	●	070	5007246	654,00
A510.Z25.T18.277-CS		1	●	070	5007247	1.255,00
A510.Z25.T22.070-CS		1	●	070	5015999	690,00
A510.Z25.T22.122-CS		1	●	070	5007248	941,00
A510.Z25.T22.282-CS		1	●	070	5007249	1.255,00
A510.Z25.T28.070-CS		1	●	070	5016000	690,00
A510.Z25.T28.127-CS		1	●	070	5007250	941,00
A510.Z32.T28.283-CS		1	●	070	5007251	1.464,00
A560.H63A.05.080		1	●	076	5007210	227,00
A560.H63A.06.080		1	●	076	5007211	227,00
A560.H63A.08.080		1	●	076	5007212	227,00
A560.H63A.10.085		1	●	076	5007213	227,00
A560.H63A.12.090		1	●	076	5007214	243,00
A560.H63A.16.095		1	●	076	5007215	243,00
A560.H63A.20.100		1	●	076	5007216	260,00
A560.H63A.25.115		1	●	076	5007217	276,00
A6181AML-2	AML	1	■	DS8	5835437*	104,00

Bezeichnung / Designation	Sorte / Grade	VE / US		Disc. Gr.	Article No.	EURO Stück / piece
A6181AML-2.05	AML	1	■	DS8	6353923*	104,00
A6181AML-2.1	AML	1	■	DS8	5835438*	104,00
A6181AML-2.15	AML	1	■	DS8	6353924*	104,00
A6181AML-2.2	AML	1	■	DS8	5835439*	104,00
A6181AML-2.25	AML	1	■	DS8	6353925*	104,00
A6181AML-2.3	AML	1	■	DS8	5835450*	104,00
A6181AML-2.35	AML	1	■	DS8	6353926*	104,00
A6181AML-3/32IN	AML	1	■	DS8	6353927*	104,00
A6181AML-2.4	AML	1	■	DS8	5835451*	104,00
A6181AML-2.45	AML	1	■	DS8	6353928*	104,00
A6181AML-2.5	AML	1	■	DS8	5835452*	104,00
A6181AML-2.55	AML	1	■	DS8	6353929*	104,00
A6181AML-2.6	AML	1	■	DS8	5835453*	104,00
A6181AML-2.65	AML	1	■	DS8	6353990*	104,00
A6181AML-2.7	AML	1	■	DS8	5835454*	104,00
A6181AML-2.75	AML	1	■	DS8	6353991*	104,00
A6181AML-7/64IN	AML	1	■	DS8	6353992*	104,00
A6181AML-2.8	AML	1	■	DS8	5835455*	104,00
A6181AML-2.85	AML	1	■	DS8	6353993*	104,00
A6181AML-2.9	AML	1	■	DS8	5835456*	104,00
A6181AML-2.95	AML	1	■	DS8	6353994*	96,00
A6181TFT-3	TFT	1	●	DS8	5200217	109,00
A6181TFT-1/8IN	TFT	1	●	DS8	5200221	109,00
A6181TFT-3.5	TFT	1	●	DS8	5293764	109,00
A6181TFT-9/64IN	TFT	1	●	DS8	5293765	109,00
A6181TFT-5/32IN	TFT	1	●	DS8	5293766	109,00
A6181TFT-4	TFT	1	●	DS8	5200215	109,00
A6181TFT-4.5	TFT	1	●	DS8	5200214	109,00
A6181TFT-3/16IN	TFT	1	●	DS8	5293767	109,00
A6181TFT-4.8	TFT	1	●	DS8	5293768	109,00
A6181TFT-5	TFT	1	●	DS8	5200213	109,00
A6181TFT-5.5	TFT	1	●	DS8	5200224	109,00
A6181TFT-7/32IN	TFT	1	●	DS8	5293769	109,00
A6181TFT-5.8	TFT	1	●	DS8	5293770	109,00
A6181TFT-6	TFT	1	●	DS8	5200223	109,00
A6181TFT-6.1	TFT	1	●	DS8	5293771	130,00
A6181TFT-1/4IN	TFT	1	●	DS8	5200207	130,00
A6181TFT-6.5	TFT	1	●	DS8	5200222	130,00
A6181TFT-6.8	TFT	1	●	DS8	5293772	130,00
A6181TFT-7	TFT	1	●	DS8	5200228	130,00
A6181TFT-9/32IN	TFT	1	●	DS8	5293773	130,00
A6181TFT-7.4	TFT	1	●	DS8	5293774	130,00
A6181TFT-7.5	TFT	1	●	DS8	5293775	130,00
A6181TFT-5/16IN	TFT	1	●	DS8	5293776	130,00
A6181TFT-8	TFT	1	●	DS8	5200227	130,00
A6181TFT-8.3	TFT	1	●	DS8	5293777	154,00
A6181TFT-8.5	TFT	1	●	DS8	5200226	154,00
A6181TFT-11/32IN	TFT	1	●	DS8	5293778	154,00
A6181TFT-9	TFT	1	●	DS8	5200225	154,00
A6181TFT-3/8IN	TFT	1	●	DS8	5200216	154,00
A6181TFT-9.8	TFT	1	●	DS8	5293779	154,00
A6181TFT-10	TFT	1	●	DS8	5200220	154,00
A6181TFT-10.2	TFT	1	●	DS8	5293780	208,00
A6181TFT-13/32IN	TFT	1	●	DS8	5293781	208,00
A6181TFT-11	TFT	1	●	DS8	5200219	208,00
A6181TFT-7/16IN	TFT	1	●	DS8	5293782	208,00
A6181TFT-11.5	TFT	1	●	DS8	5293783	208,00
A6181TFT-11.8	TFT	1	●	DS8	5293784	208,00
A6181TFT-15/32IN	TFT	1	●	DS8	5293785	208,00
A6181TFT-12	TFT	1	●	DS8	5200218	208,00
A6181TFT-1/2IN	TFT	1	●	DS8	5293786	284,00
A6181TFT-13	TFT	1	●	DS8	5293787	284,00
A6181TFT-14	TFT	1	●	DS8	5293788	284,00
A6181TFT-9/16IN	TFT	1	●	DS8	5293789	346,00
A6181TFT-15	TFT	1	●	DS8	5293790	346,00
A6181TFT-16	TFT	1	●	DS8	5293791	346,00
A6489AMP-2	AMP	1	■	DS8	5932193*	167,00
A6489AMP-2.05	AMP	1	■	DS8	5932194*	167,00
A6489AMP-2.1	AMP	1	■	DS8	5932195*	167,00
A6489AMP-2.15	AMP	1	■	DS8	5932196*	167,00

Bezeichnung / Designation	Sorte / Grade	VE / US		Disc. Gr.	Article No.	EURO Stück / piece
A6489AMP-2.2	AMP	1	■	DS8	5932197*	167,00
A6489AMP-2.25	AMP	1	■	DS8	5932198*	167,00
A6489AMP-2.3	AMP	1	■	DS8	5932199*	167,00
A6489AMP-2.35	AMP	1	■	DS8	5932200*	167,00
A6489AMP-3/32IN	AMP	1	■	DS8	5932201*	167,00
A6489AMP-2.4	AMP	1	■	DS8	5932202*	167,00
A6489AMP-2.45	AMP	1	■	DS8	5932203*	167,00
A6489AMP-2.5	AMP	1	■	DS8	5932204*	167,00
A6489AMP-2.55	AMP	1	■	DS8	5932205*	167,00
A6489AMP-2.6	AMP	1	■	DS8	5932206*	167,00
A6489AMP-2.65	AMP	1	■	DS8	5932207*	167,00
A6489AMP-2.7	AMP	1	■	DS8	5932208*	167,00
A6489AMP-2.75	AMP	1	■	DS8	5932209*	167,00
A6489AMP-7/64IN	AMP	1	■	DS8	5932210*	167,00
A6489AMP-2.8	AMP	1	■	DS8	5932211*	167,00
A6489AMP-2.85	AMP	1	■	DS8	5932212*	167,00
A6489AMP-2.9	AMP	1	■	DS8	5932213*	167,00
A6489AMP-2.95	AMP	1	■	DS8	5932214*	167,00
A6489DPP-3	DPP	1	●	DS8	5691043	226,00
A6489DPP-3.1	DPP	1	●	DS8	5834648	226,00
A6489DPP-1/8IN	DPP	1	●	DS8	5834612	226,00
A6489DPP-3.2	DPP	1	●	DS8	5834649	226,00
A6489DPP-3.3	DPP	1	●	DS8	5834650	226,00
A6489DPP-3.4	DPP	1	●	DS8	5834651	226,00
A6489DPP-3.5	DPP	1	●	DS8	5834652	226,00
A6489DPP-9/64IN	DPP	1	●	DS8	5834717	226,00
A6489DPP-3.6	DPP	1	●	DS8	5834653	226,00
A6489DPP-3.7	DPP	1	●	DS8	5834654	226,00
A6489DPP-3.8	DPP	1	●	DS8	5834655	226,00
A6489DPP-3.9	DPP	1	●	DS8	5834656	226,00
A6489DPP-5/32IN	DPP	1	●	DS8	5834679	226,00
A6489DPP-4	DPP	1	●	DS8	5834660	226,00
A6489DPP-4.1	DPP	1	●	DS8	5834661	226,00
A6489DPP-4.2	DPP	1	●	DS8	5834662	226,00
A6489DPP-4.3	DPP	1	●	DS8	5834663	226,00
A6489DPP-11/64IN	DPP	1	●	DS8	5834624	226,00
A6489DPP-4.4	DPP	1	●	DS8	5834664	226,00
A6489DPP-4.5	DPP	1	●	DS8	5834665	226,00
A6489DPP-4.6	DPP	1	●	DS8	5834666	226,00
A6489DPP-4.7	DPP	1	●	DS8	5691044	226,00
A6489DPP-3/16IN	DPP	1	●	DS8	5834657	226,00
A6489DPP-4.8	DPP	1	●	DS8	5834667	226,00
A6489DPP-4.9	DPP	1	●	DS8	5834668	226,00
A6489DPP-5	DPP	1	●	DS8	5834669	226,00
A6489DPP-5.1	DPP	1	●	DS8	5691045	226,00
A6489DPP-13/64IN	DPP	1	●	DS8	5834629	226,00
A6489DPP-5.2	DPP	1	●	DS8	5834670	226,00
A6489DPP-5.3	DPP	1	●	DS8	5834671	226,00
A6489DPP-5.4	DPP	1	●	DS8	5834672	226,00
A6489DPP-5.5	DPP	1	●	DS8	5834673	226,00
A6489DPP-7/32IN	DPP	1	●	DS8	5834699	226,00
A6489DPP-5.6	DPP	1	●	DS8	5834674	226,00
A6489DPP-5.7	DPP	1	●	DS8	5834675	226,00
A6489DPP-5.8	DPP	1	●	DS8	5834676	226,00
A6489DPP-5.9	DPP	1	●	DS8	5834677	226,00
A6489DPP-15/64IN	DPP	1	●	DS8	5834635	226,00
A6489DPP-6	DPP	1	●	DS8	5834680	226,00
A6489DPP-6.1	DPP	1	●	DS8	5834681	271,00
A6489DPP-6.2	DPP	1	●	DS8	5834682	271,00
A6489DPP-6.3	DPP	1	●	DS8	5834683	271,00
A6489DPP-1/4IN	DPP	1	●	DS8	5834611	271,00
A6489DPP-6.4	DPP	1	●	DS8	5834684	271,00
A6489DPP-6.5	DPP	1	●	DS8	5834685	271,00
A6489DPP-6.6	DPP	1	●	DS8	5834686	271,00
A6489DPP-6.7	DPP	1	●	DS8	5834687	271,00
A6489DPP-17/64IN	DPP	1	●	DS8	5834640	271,00
A6489DPP-6.8	DPP	1	●	DS8	5834688	271,00
A6489DPP-6.9	DPP	1	●	DS8	5834689	271,00
A6489DPP-7	DPP	1	●	DS8	5834690	271,00
A6489DPP-7.1	DPP	1	●	DS8	5834691	271,00

Bezeichnung / Designation	Sorte / Grade	VE / US		Disc. Gr.	Article No.	EURO Stück / piece
A6489DPP-9/32IN	DPP	1	●	DS8	5834716	**271,00**
A6489DPP-7.2	DPP	1	●	DS8	5834692	**271,00**
A6489DPP-7.3	DPP	1	●	DS8	5834693	**271,00**
A6489DPP-7.4	DPP	1	●	DS8	5834694	**271,00**
A6489DPP-7.5	DPP	1	●	DS8	5834695	**271,00**
A6489DPP-19/64IN	DPP	1	●	DS8	5834643	**271,00**
A6489DPP-7.6	DPP	1	●	DS8	5918590	**271,00**
A6489DPP-7.7	DPP	1	●	DS8	5834696	**271,00**
A6489DPP-7.8	DPP	1	●	DS8	5834697	**271,00**
A6489DPP-7.9	DPP	1	●	DS8	5918591	**271,00**
A6489DPP-5/16IN	DPP	1	●	DS8	5834678	**271,00**
A6489DPP-8	DPP	1	●	DS8	5834700	**271,00**
A6489DPP-8.1	DPP	1	●	DS8	5834701	**316,00**
A6489DPP-8.2	DPP	1	●	DS8	5834702	**316,00**
A6489DPP-8.3	DPP	1	●	DS8	5834703	**316,00**
A6489DPP-21/64IN	DPP	1	●	DS8	5918586	**316,00**
A6489DPP-8.4	DPP	1	●	DS8	5834704	**316,00**
A6489DPP-8.5	DPP	1	●	DS8	5691046	**316,00**
A6489DPP-8.6	DPP	1	●	DS8	5834705	**316,00**
A6489DPP-8.7	DPP	1	●	DS8	5834706	**316,00**
A6489DPP-11/32IN	DPP	1	●	DS8	5834623	**316,00**
A6489DPP-8.8	DPP	1	●	DS8	5834707	**316,00**
A6489DPP-8.9	DPP	1	●	DS8	5918592	**316,00**
A6489DPP-9	DPP	1	●	DS8	5834708	**316,00**
A6489DPP-9.1	DPP	1	●	DS8	5834709	**316,00**
A6489DPP-23/64IN	DPP	1	●	DS8	5834645	**316,00**
A6489DPP-9.2	DPP	1	●	DS8	5918593	**316,00**
A6489DPP-9.3	DPP	1	●	DS8	5834710	**316,00**
A6489DPP-9.4	DPP	1	●	DS8	5834711	**316,00**
A6489DPP-9.5	DPP	1	●	DS8	5834712	**316,00**
A6489DPP-3/8IN	DPP	1	●	DS8	5834658	**316,00**
A6489DPP-9.6	DPP	1	●	DS8	5918594	**316,00**
A6489DPP-9.7	DPP	1	●	DS8	5834713	**316,00**
A6489DPP-9.8	DPP	1	●	DS8	5834714	**316,00**
A6489DPP-9.9	DPP	1	●	DS8	5918595	**316,00**
A6489DPP-25/64IN	DPP	1	●	DS8	5834646	**316,00**
A6489DPP-10	DPP	1	●	DS8	5834613	**316,00**
A6489DPP-10.1	DPP	1	●	DS8	5834614	**429,00**
A6489DPP-10.2	DPP	1	●	DS8	5834615	**429,00**
A6489DPP-10.3	DPP	1	●	DS8	5834616	**429,00**
A6489DPP-13/32IN	DPP	1	●	DS8	5834628	**429,00**
A6489DPP-10.4	DPP	1	●	DS8	5918573	**429,00**
A6489DPP-10.5	DPP	1	●	DS8	5834617	**429,00**
A6489DPP-10.6	DPP	1	●	DS8	5918574	**429,00**
A6489DPP-10.7	DPP	1	●	DS8	5918575	**429,00**
A6489DPP-27/64IN	DPP	1	●	DS8	5834647	**429,00**
A6489DPP-10.8	DPP	1	●	DS8	5834618	**429,00**
A6489DPP-10.9	DPP	1	●	DS8	5918576	**429,00**
A6489DPP-11	DPP	1	●	DS8	5834619	**429,00**
A6489DPP-11.1	DPP	1	●	DS8	5918577	**429,00**
A6489DPP-7/16IN	DPP	1	●	DS8	5834698	**429,00**
A6489DPP-11.2	DPP	1	●	DS8	5834620	**429,00**
A6489DPP-11.3	DPP	1	●	DS8	5918578	**429,00**
A6489DPP-11.4	DPP	1	●	DS8	5918579	**429,00**
A6489DPP-11.5	DPP	1	●	DS8	5834621	**429,00**
A6489DPP-29/64IN	DPP	1	●	DS8	5918587	**429,00**
A6489DPP-11.6	DPP	1	●	DS8	5918580	**429,00**
A6489DPP-11.7	DPP	1	●	DS8	5918581	**429,00**
A6489DPP-11.8	DPP	1	●	DS8	5834622	**429,00**
A6489DPP-11.9	DPP	1	●	DS8	5918582	**429,00**
A6489DPP-15/32IN	DPP	1	●	DS8	5834634	**429,00**
A6489DPP-12	DPP	1	●	DS8	5691047	**429,00**
A6489DPP-31/64IN	DPP	1	●	DS8	5834659	**587,00**
A6489DPP-12.5	DPP	1	●	DS8	5834625	**587,00**
A6489DPP-1/2IN	DPP	1	●	DS8	5834610	**587,00**
A6489DPP-13	DPP	1	●	DS8	5834626	**587,00**
A6489DPP-17/32IN	DPP	1	●	DS8	5834639	**587,00**
A6489DPP-13.5	DPP	1	●	DS8	5834627	**587,00**
A6489DPP-14	DPP	1	●	DS8	5834630	**587,00**
A6489DPP-9/16IN	DPP	1	●	DS8	5834715	**768,00**

Bezeichnung / Designation	Sorte / Grade	VE / US		Disc. Gr.	Article No.	EURO Stück / piece
A6489DPP-14.5	DPP	1	●	DS8	5834631	**768,00**
A6489DPP-15	DPP	1	●	DS8	5834632	**768,00**
A6489DPP-15.5	DPP	1	●	DS8	5834633	**768,00**
A6489DPP-5/8IN	DPP	1	●	DS8	5918589	**768,00**
A6489DPP-16	DPP	1	●	DS8	5834636	**768,00**
A6489DPP-16.5	DPP	1	●	DS8	5918583	**971,00**
A6489DPP-17	DPP	1	●	DS8	5834637	**971,00**
A6489DPP-17.5	DPP	1	●	DS8	5834638	**971,00**
A6489DPP-18	DPP	1	●	DS8	5834641	**971,00**
A6489DPP-18.5	DPP	1	●	DS8	5918584	**1.174,00**
A6489DPP-19	DPP	1	●	DS8	5834642	**1.174,00**
A6489DPP-3/4IN	DPP	1	●	DS8	5918588	**1.174,00**
A6489DPP-19.5	DPP	1	●	DS8	5918585	**1.174,00**
A6489DPP-20	DPP	1	●	DS8	5834644	**1.174,00**
A6589AMP-2	AMP	1	■	DS8	5928651*	**206,00**
A6589AMP-2.1	AMP	1	■	DS8	5932217*	**206,00**
A6589AMP-2.2	AMP	1	■	DS8	5932218*	**206,00**
A6589AMP-2.3	AMP	1	■	DS8	5932219*	**206,00**
A6589AMP-3/32IN	AMP	1	■	DS8	5932220*	**206,00**
A6589AMP-2.4	AMP	1	■	DS8	5932221*	**206,00**
A6589AMP-2.5	AMP	1	■	DS8	5932222*	**206,00**
A6589AMP-2.6	AMP	1	■	DS8	5932223*	**206,00**
A6589AMP-2.7	AMP	1	■	DS8	5932224*	**206,00**
A6589AMP-7/64IN	AMP	1	■	DS8	5932225*	**206,00**
A6589AMP-2.8	AMP	1	■	DS8	5932226*	**206,00**
A6589AMP-2.9	AMP	1	■	DS8	5932227*	**206,00**
A6589DPP-3	DPP	1	●	DS8	5691048	**260,00**
A6589DPP-3.1	DPP	1	●	DS8	5834788	**260,00**
A6589DPP-1/8IN	DPP	1	●	DS8	5834746	**260,00**
A6589DPP-3.2	DPP	1	●	DS8	5834789	**260,00**
A6589DPP-3.3	DPP	1	●	DS8	5834790	**260,00**
A6589DPP-3.4	DPP	1	●	DS8	5834791	**260,00**
A6589DPP-3.5	DPP	1	●	DS8	5834792	**260,00**
A6589DPP-9/64IN	DPP	1	●	DS8	5834853	**260,00**
A6589DPP-3.6	DPP	1	●	DS8	5834793	**260,00**
A6589DPP-3.7	DPP	1	●	DS8	5834794	**260,00**
A6589DPP-3.8	DPP	1	●	DS8	5834795	**260,00**
A6589DPP-3.9	DPP	1	●	DS8	5834796	**260,00**
A6589DPP-5/32IN	DPP	1	●	DS8	5834819	**260,00**
A6589DPP-4	DPP	1	●	DS8	5834800	**260,00**
A6589DPP-4.1	DPP	1	●	DS8	5834801	**260,00**
A6589DPP-4.2	DPP	1	●	DS8	5834802	**260,00**
A6589DPP-4.3	DPP	1	●	DS8	5834803	**260,00**
A6589DPP-11/64IN	DPP	1	●	DS8	5834768	**260,00**
A6589DPP-4.4	DPP	1	●	DS8	5834804	**260,00**
A6589DPP-4.5	DPP	1	●	DS8	5834805	**260,00**
A6589DPP-4.6	DPP	1	●	DS8	5834806	**260,00**
A6589DPP-4.7	DPP	1	●	DS8	5691049	**260,00**
A6589DPP-3/16IN	DPP	1	●	DS8	5834797	**260,00**
A6589DPP-4.8	DPP	1	●	DS8	5834807	**260,00**
A6589DPP-4.9	DPP	1	●	DS8	5834808	**260,00**
A6589DPP-5	DPP	1	●	DS8	5834809	**260,00**
A6589DPP-5.1	DPP	1	●	DS8	5691060	**260,00**
A6589DPP-13/64IN	DPP	1	●	DS8	5834773	**260,00**
A6589DPP-5.2	DPP	1	●	DS8	5834810	**260,00**
A6589DPP-5.3	DPP	1	●	DS8	5834811	**260,00**
A6589DPP-5.4	DPP	1	●	DS8	5834812	**260,00**
A6589DPP-5.5	DPP	1	●	DS8	5834813	**260,00**
A6589DPP-5.55	DPP	1	●	DS8	5919507	**260,00**
A6589DPP-7/32IN	DPP	1	●	DS8	5834837	**260,00**
A6589DPP-5.6	DPP	1	●	DS8	5834814	**260,00**
A6589DPP-5.7	DPP	1	●	DS8	5834815	**260,00**
A6589DPP-5.8	DPP	1	●	DS8	5834816	**260,00**
A6589DPP-5.9	DPP	1	●	DS8	5834817	**260,00**
A6589DPP-6	DPP	1	●	DS8	5834820	**260,00**
A6589DPP-6.1	DPP	1	●	DS8	5834821	**313,00**
A6589DPP-6.2	DPP	1	●	DS8	5834822	**313,00**
A6589DPP-6.3	DPP	1	●	DS8	5834823	**313,00**
A6589DPP-1/4IN	DPP	1	●	DS8	5834745	**313,00**
A6589DPP-6.4	DPP	1	●	DS8	5834824	**313,00**

Bezeichnung / Designation	Sorte / Grade	VE / US		Disc. Gr.	Article No.	EURO Stück / piece
A6589DPP-6.5	DPP	1	●	DS8	5834825	313,00
A6589DPP-6.6	DPP	1	●	DS8	5834826	313,00
A6589DPP-6.7	DPP	1	●	DS8	5834827	313,00
A6589DPP-17/64IN	DPP	1	●	DS8	5834782	313,00
A6589DPP-6.8	DPP	1	●	DS8	5834828	313,00
A6589DPP-6.9	DPP	1	●	DS8	5834829	313,00
A6589DPP-7	DPP	1	●	DS8	5834830	313,00
A6589DPP-7.1	DPP	1	●	DS8	5834831	313,00
A6589DPP-9/32IN	DPP	1	●	DS8	5834852	313,00
A6589DPP-7.2	DPP	1	●	DS8	5834832	313,00
A6589DPP-7.3	DPP	1	●	DS8	5919509	313,00
A6589DPP-7.4	DPP	1	●	DS8	5834833	313,00
A6589DPP-7.5	DPP	1	●	DS8	5834834	313,00
A6589DPP-19/64IN	DPP	1	●	DS8	5834785	313,00
A6589DPP-7.8	DPP	1	●	DS8	5834835	313,00
A6589DPP-7.9	DPP	1	●	DS8	5919510	313,00
A6589DPP-5/16IN	DPP	1	●	DS8	5834818	313,00
A6589DPP-8	DPP	1	●	DS8	5834838	313,00
A6589DPP-8.1	DPP	1	●	DS8	5834839	365,00
A6589DPP-8.2	DPP	1	●	DS8	5834840	365,00
A6589DPP-8.3	DPP	1	●	DS8	5834841	365,00
A6589DPP-8.4	DPP	1	●	DS8	5834842	365,00
A6589DPP-8.5	DPP	1	●	DS8	5691061	365,00
A6589DPP-8.6	DPP	1	●	DS8	5834843	365,00
A6589DPP-8.7	DPP	1	●	DS8	5834844	365,00
A6589DPP-11/32IN	DPP	1	●	DS8	5834767	365,00
A6589DPP-8.8	DPP	1	●	DS8	5834845	365,00
A6589DPP-9	DPP	1	●	DS8	5834846	365,00
A6589DPP-23/64IN	DPP	1	●	DS8	5834786	365,00
A6589DPP-9.2	DPP	1	●	DS8	5919511	365,00
A6589DPP-9.3	DPP	1	●	DS8	5834847	365,00
A6589DPP-9.5	DPP	1	●	DS8	5834848	365,00
A6589DPP-3/8IN	DPP	1	●	DS8	5834798	365,00
A6589DPP-9.6	DPP	1	●	DS8	5919512	365,00
A6589DPP-9.7	DPP	1	●	DS8	5834849	365,00
A6589DPP-9.8	DPP	1	●	DS8	5834850	365,00
A6589DPP-25/64IN	DPP	1	●	DS8	5919505	365,00
A6589DPP-10	DPP	1	●	DS8	5834747	365,00
A6589DPP-10.1	DPP	1	●	DS8	5834748	495,00
A6589DPP-10.2	DPP	1	●	DS8	5834749	495,00
A6589DPP-10.3	DPP	1	●	DS8	5834760	495,00
A6589DPP-13/32IN	DPP	1	●	DS8	5834772	495,00
A6589DPP-10.4	DPP	1	●	DS8	5919444	495,00
A6589DPP-10.5	DPP	1	●	DS8	5834761	495,00
A6589DPP-27/64IN	DPP	1	●	DS8	5834787	495,00
A6589DPP-10.8	DPP	1	●	DS8	5834762	495,00
A6589DPP-11	DPP	1	●	DS8	5834763	495,00
A6589DPP-11.1	DPP	1	●	DS8	5919445	495,00
A6589DPP-7/16IN	DPP	1	●	DS8	5834836	495,00
A6589DPP-11.2	DPP	1	●	DS8	5834764	495,00
A6589DPP-11.5	DPP	1	●	DS8	5834765	495,00
A6589DPP-29/64IN	DPP	1	●	DS8	5919506	495,00
A6589DPP-11.7	DPP	1	●	DS8	5919446	495,00
A6589DPP-11.8	DPP	1	●	DS8	5834766	495,00
A6589DPP-15/32IN	DPP	1	●	DS8	5834778	495,00
A6589DPP-12	DPP	1	●	DS8	5691062	495,00
A6589DPP-12.1	DPP	1	●	DS8	5919447	677,00
A6589DPP-12.2	DPP	1	●	DS8	5919448	677,00
A6589DPP-12.3	DPP	1	●	DS8	5919449	677,00
A6589DPP-31/64IN	DPP	1	●	DS8	5834799	677,00
A6589DPP-12.5	DPP	1	●	DS8	5834769	677,00
A6589DPP-12.6	DPP	1	●	DS8	5919500	677,00
A6589DPP-1/2IN	DPP	1	●	DS8	5834744	677,00
A6589DPP-13	DPP	1	●	DS8	5834770	677,00
A6589DPP-17/32IN	DPP	1	●	DS8	5919502	677,00
A6589DPP-13.5	DPP	1	●	DS8	5834771	677,00
A6589DPP-14	DPP	1	●	DS8	5834774	677,00
A6589DPP-9/16IN	DPP	1	●	DS8	5834851	886,00
A6589DPP-14.5	DPP	1	●	DS8	5834775	886,00
A6589DPP-15	DPP	1	●	DS8	5834776	886,00

Bezeichnung / Designation	Sorte / Grade	VE / US		Disc. Gr.	Article No.	EURO Stück / piece
A6589DPP-15.5	DPP	1	●	DS8	5834777	886,00
A6589DPP-5/8IN	DPP	1	●	DS8	5919508	886,00
A6589DPP-16	DPP	1	●	DS8	5834779	886,00
A6589DPP-16.5	DPP	1	●	DS8	5919501	1.120,00
A6589DPP-17	DPP	1	●	DS8	5834780	1.120,00
A6589DPP-17.5	DPP	1	●	DS8	5834781	1.120,00
A6589DPP-18	DPP	1	●	DS8	5834783	1.120,00
A6589DPP-18.5	DPP	1	●	DS8	5919503	1.354,00
A6589DPP-19	DPP	1	●	DS8	5834784	1.354,00
A6589DPP-19.5	DPP	1	●	DS8	5919504	1.354,00
A6589DPP-20	DPP	1	●	DS8	5691063	1.354,00
A6689AMP-2	AMP	1	■	DS9	6353995*	230,00
A6689AMP-2.1	AMP	1	■	DS9	6353996*	230,00
A6689AMP-2.2	AMP	1	■	DS9	6353997*	230,00
A6689AMP-2.3	AMP	1	■	DS9	6353998*	230,00
A6689AMP-3/32IN	AMP	1	■	DS9	6353999*	230,00
A6689AMP-2.4	AMP	1	■	DS9	6354000*	230,00
A6689AMP-2.5	AMP	1	■	DS9	6354001*	230,00
A6689AMP-2.6	AMP	1	■	DS9	6354002*	230,00
A6689AMP-2.7	AMP	1	■	DS9	6354003*	230,00
A6689AMP-7/64IN	AMP	1	■	DS9	6354004*	230,00
A6689AMP-2.8	AMP	1	■	DS9	6354005*	230,00
A6689AMP-2.9	AMP	1	■	DS9	6354006*	230,00
A6789AMP-2	AMP	1	■	DS9	5835358*	273,00
A6789AMP-2.1	AMP	1	■	DS9	5835359*	273,00
A6789AMP-2.2	AMP	1	■	DS9	5835360*	273,00
A6789AMP-2.3	AMP	1	■	DS9	5835361*	273,00
A6789AMP-3/32IN	AMP	1	■	DS9	6354007*	273,00
A6789AMP-2.4	AMP	1	■	DS9	5835362*	273,00
A6789AMP-2.5	AMP	1	■	DS9	5835363*	273,00
A6789AMP-2.6	AMP	1	■	DS9	5835364*	273,00
A6789AMP-2.7	AMP	1	■	DS9	5835365*	273,00
A6789AMP-7/64IN	AMP	1	■	DS9	6354008*	273,00
A6789AMP-2.8	AMP	1	■	DS9	5835366*	273,00
A6789AMP-2.9	AMP	1	■	DS9	5835367*	273,00
A6794TFP-3	TFP	1	●	DS9	5564938	302,00
A6794TFP-1/8IN	TFP	1	●	DS9	5564939	302,00
A6794TFP-3.5	TFP	1	●	DS9	5564960	302,00
A6794TFP-9/64IN	TFP	1	●	DS9	5564961	302,00
A6794TFP-5/32IN	TFP	1	●	DS9	5564962	302,00
A6794TFP-4	TFP	1	●	DS9	5564963	302,00
A6794TFP-4.5	TFP	1	●	DS9	5564964	302,00
A6794TFP-3/16IN	TFP	1	●	DS9	5564965	302,00
A6794TFP-4.8	TFP	1	●	DS9	5564966	302,00
A6794TFP-5	TFP	1	●	DS9	5564967	302,00
A6794TFP-5.5	TFP	1	●	DS9	5564968	302,00
A6794TFP-7/32IN	TFP	1	●	DS9	5564969	302,00
A6794TFP-6	TFP	1	●	DS9	5564971	302,00
A6794TFP-6.1	TFP	1	●	DS9	5564972	363,00
A6794TFP-1/4IN	TFP	1	●	DS9	5564973	363,00
A6794TFP-6.5	TFP	1	●	DS9	5564974	363,00
A6794TFP-6.8	TFP	1	●	DS9	5564975	363,00
A6794TFP-7	TFP	1	●	DS9	5564976	363,00
A6794TFP-9/32IN	TFP	1	●	DS9	5564977	363,00
A6794TFP-7.5	TFP	1	●	DS9	5564979	363,00
A6794TFP-5/16IN	TFP	1	●	DS9	5564980	363,00
A6794TFP-8	TFP	1	●	DS9	5564981	363,00
A6794TFP-8.3	TFP	1	●	DS9	5564982	423,00
A6794TFP-8.5	TFP	1	●	DS9	5564983	423,00
A6794TFP-11/32IN	TFP	1	●	DS9	5564984	423,00
A6794TFP-9	TFP	1	●	DS9	5564985	423,00
A6794TFP-3/8IN	TFP	1	●	DS9	5564986	423,00
A6794TFP-9.8	TFP	1	●	DS9	5564987	423,00
A6794TFP-10	TFP	1	●	DS9	5564988	423,00
A6889AMP-2	AMP	1	■	DS9	6354009*	330,00
A6889AMP-2.1	AMP	1	■	DS9	6354010*	330,00
A6889AMP-2.2	AMP	1	■	DS9	6354011*	330,00
A6889AMP-2.3	AMP	1	■	DS9	6354012*	330,00
A6889AMP-3/32IN	AMP	1	■	DS9	6354013*	330,00
A6889AMP-2.4	AMP	1	■	DS9	6354014*	330,00

Bezeichnung / Designation	Sorte / Grade	VE / US		Disc. Gr.	Article No.	EURO Stück / piece
A6889AMP-2.5	AMP	1	■	DS9	5835396[1]	**330,00**
A6889AMP-2.6	AMP	1	■	DS9	5835397[1]	**330,00**
A6889AMP-2.7	AMP	1	■	DS9	5835398[1]	**330,00**
A6889AMP-7/64IN	AMP	1	■	DS9	6354015[1]	**330,00**
A6889AMP-2.8	AMP	1	■	DS9	5835399[1]	**330,00**
A6889AMP-2.9	AMP	1	■	DS9	5835410[1]	**330,00**
A6989AMP-2	AMP	1	■	DS9	6354016[1]	**389,00**
A6989AMP-2.1	AMP	1	■	DS9	6354017[1]	**389,00**
A6989AMP-2.2	AMP	1	■	DS9	6354018[1]	**389,00**
A6989AMP-2.3	AMP	1	■	DS9	6354019[1]	**389,00**
A6989AMP-3/32IN	AMP	1	■	DS9	6354030[1]	**389,00**
A6989AMP-2.4	AMP	1	■	DS9	6354031[1]	**389,00**
A6989AMP-2.5	AMP	1	■	DS9	6354032[1]	**389,00**
A6989AMP-2.6	AMP	1	■	DS9	6354033[1]	**389,00**
A6989AMP-2.7	AMP	1	■	DS9	6354034[1]	**389,00**
A6989AMP-7/64IN	AMP	1	■	DS9	6354035[1]	**389,00**
A6989AMP-2.8	AMP	1	■	DS9	6354036[1]	**389,00**
A6989AMP-2.9	AMP	1	■	DS9	6354037[1]	**389,00**
A6994TFP-3	TFP	1	●	DS9	5564994	**431,00**
A6994TFP-1/8IN	TFP	1	●	DS9	5564995	**431,00**
A6994TFP-3.5	TFP	1	●	DS9	5564996	**431,00**
A6994TFP-9/64IN	TFP	1	●	DS9	5564997	**431,00**
A6994TFP-5/32IN	TFP	1	●	DS9	5564998	**431,00**
A6994TFP-4	TFP	1	●	DS9	5564999	**431,00**
A6994TFP-4.5	TFP	1	●	DS9	5565020	**431,00**
A6994TFP-3/16IN	TFP	1	●	DS9	5565021	**431,00**
A6994TFP-4.8	TFP	1	●	DS9	5565022	**431,00**
A6994TFP-5	TFP	1	●	DS9	5565023	**431,00**
A6994TFP-5.5	TFP	1	●	DS9	5565024	**431,00**
A6994TFP-7/32IN	TFP	1	●	DS9	5565025	**431,00**
A6994TFP-6	TFP	1	●	DS9	5565027	**431,00**
A6994TFP-1/4IN	TFP	1	●	DS9	5565029	**517,00**
A6994TFP-6.5	TFP	1	●	DS9	5565030	**517,00**
A6994TFP-6.8	TFP	1	●	DS9	5565031	**517,00**
A6994TFP-7	TFP	1	●	DS9	5565032	**517,00**
A6994TFP-8	TFP	1	●	DS9	5565037	**517,00**
A6994TFP-8.3	TFP	1	●	DS9	5565038	**604,00**
A6994TFP-8.5	TFP	1	●	DS9	5565039	**604,00**
A6994TFP-11/32IN	TFP	1	●	DS9	5565040	**604,00**
A6994TFP-9	TFP	1	●	DS9	5565041	**604,00**
A6994TFP-10	TFP	1	●	DS9	5565044	**604,00**
A7495TTP-3	TTP	1	●	DS9	6795914	**563,00**
A7495TTP-1/8IN	TTP	1	●	DS9	6795915	**563,00**
A7495TTP-3.5	TTP	1	●	DS9	6795916[2]	**563,00**
A7495TTP-9/64IN	TTP	1	○	DS9	6795917	**563,00**
A7495TTP-5/32IN	TTP	1	○	DS9	6795918	**563,00**
A7495TTP-4	TTP	1	●	DS9	6795919	**563,00**
A7495TTP-4.5	TTP	1	●	DS9	6399002	**594,00**
A7495TTP-3/16IN	TTP	1	●	DS9	6399003	**594,00**
A7495TTP-4.8	TTP	1	●	DS9	6399004[2]	**594,00**
A7495TTP-5	TTP	1	●	DS9	6280441	**594,00**
A7495TTP-5.5	TTP	1	●	DS9	6280442	**635,00**
A7495TTP-7/32IN	TTP	1	●	DS9	6280443	**635,00**
A7495TTP-5.8	TTP	1	○	DS9	6280444	**635,00**
A7495TTP-6	TTP	1	●	DS9	6280445	**635,00**
A7495TTP-6.1	TTP	1	○	DS9	6280446	**761,00**
A7495TTP-1/4IN	TTP	1	●	DS9	6280447	**761,00**
A7495TTP-6.5	TTP	1	●	DS9	6280448	**761,00**
A7495TTP-6.8	TTP	1	●	DS9	6280449[2]	**761,00**
A7495TTP-7	TTP	1	●	DS9	6280480	**761,00**
A7495TTP-9/32IN	TTP	1	○	DS9	6280481	**761,00**
A7495TTP-7.5	TTP	1	●	DS9	6280483	**761,00**
A7495TTP-5/16IN	TTP	1	●	DS9	6280484	**761,00**
A7495TTP-8	TTP	1	●	DS9	6280485	**761,00**
A7495TTP-8.5	TTP	1	●	DS9	6280487	**888,00**
A7495TTP-11/32IN	TTP	1	●	DS9	6280488	**888,00**
A7495TTP-9	TTP	1	●	DS9	6280489	**888,00**
A7495TTP-3/8IN	TTP	1	●	DS9	6280490	**888,00**
A7495TTP-9.8	TTP	1	○	DS9	6280491	**888,00**
A7495TTP-10	TTP	1	●	DS9	6280492	**888,00**

Bezeichnung / Designation	Sorte / Grade	VE / US		Disc. Gr.	Article No.	EURO Stück / piece
A7495TTP-10.2	TTP	1	●	DS9	6280493	**1.206,00**
A7495TTP-11	TTP	1	●	DS9	6280495	**1.206,00**
A7595TTP-3	TTP	1	●	DS9	6796010	**753,00**
A7595TTP-1/8IN	TTP	1	●	DS9	6796011	**753,00**
A7595TTP-3.5	TTP	1	●	DS9	6796012[2]	**753,00**
A7595TTP-9/64IN	TTP	1	○	DS9	6796013	**753,00**
A7595TTP-5/32IN	TTP	1	○	DS9	6796014	**753,00**
A7595TTP-4	TTP	1	●	DS9	6796015	**753,00**
A7595TTP-4.5	TTP	1	●	DS9	6490173[2]	**795,00**
A7595TTP-3/16IN	TTP	1	●	DS9	6490174	**795,00**
A7595TTP-4.8	TTP	1	○	DS9	6490175	**795,00**
A7595TTP-5	TTP	1	●	DS9	6280496	**795,00**
A7595TTP-5.5	TTP	1	●	DS9	6280497	**848,00**
A7595TTP-7/32IN	TTP	1	○	DS9	6280498	**848,00**
A7595TTP-6	TTP	1	●	DS9	6280500	**848,00**
A7595TTP-6.1	TTP	1	○	DS9	6280501	**1.018,00**
A7595TTP-1/4IN	TTP	1	●	DS9	6280502	**1.018,00**
A7595TTP-6.5	TTP	1	●	DS9	6280503	**1.018,00**
A7595TTP-6.8	TTP	1	○	DS9	6280504	**1.018,00**
A7595TTP-7	TTP	1	●	DS9	6280505	**1.018,00**
A7595TTP-5/16IN	TTP	1	●	DS9	6280509[2]	**1.018,00**
A7595TTP-8	TTP	1	●	DS9	6280510	**1.018,00**
A7595TTP-8.3	TTP	1	○	DS9	6280511	**1.188,00**
A7595TTP-8.5	TTP	1	○	DS9	6280512	**1.188,00**
A7595TTP-11/32IN	TTP	1	○	DS9	6280513	**1.188,00**
A7595TTP-9	TTP	1	●	DS9	6280514	**1.188,00**
AA704-B16-G16-040-A		1	●	076	6682444	**431,00**
AA704-B16-G16-040-B		1	●	076	6682447	**431,00**
AA704-B22-G22-040-B		1	●	076	6682448	**439,00**
AA704-B32-G32-050-B		1	●	076	6682445	**447,00**
AA704-B40-G40-063-B		1	●	076	6708326	**467,00**
AA704.B19-G22-040-B		1	●	076	7353798	**439,00**
AA704.B26-G32-050-B		1	●	076	7353799	**447,00**
AA704.B38-G40-062-B		1	●	076	7353880	**467,00**
AA766-T36-G16-040		1	●	070	6682460	**486,00**
AA766-T45-G16-050		1	●	070	6682461	**493,00**
AB001.K40-B19-038		1	●	076	7604668	**171,00**
AB001.K40-B26-051		1	●	076	7604669	**181,00**
AB001.K40-B31-102		1	●	076	7604787	**211,00**
AB001.K40-B38-061		1	●	076	7604780	**202,00**
AB001.K50-B19-038		1	●	076	7604781	**236,00**
AB001.K50-B26-051		1	●	076	7604782	**251,00**
AB001.K50-B26-102		1	●	076	7604783	**276,00**
AB001.K50-B31-038		1	●	076	7604788	**292,00**
AB001.K50-B38-061		1	●	076	7604784	**280,00**
AB001.K50-B38-102		1	●	076	7604785	**308,00**
AB001.K50-B63-061		1	●	076	7604786	**354,00**
AB009.K40-ER16-067		1	●	076	6840714	**160,00**
AB009.K40-ER16-105		1	●	076	6840715	**176,00**
AB009.K40-ER20-105		1	●	076	6840716	**188,00**
AB009.K40-ER20-156		1	●	076	6840717	**205,00**
AB009.K40-ER25-105		1	●	076	6840718	**199,00**
AB009.K40-ER32-079		1	●	076	6840719	**211,00**
AB009.K40-ER32-105		1	●	076	6840750	**211,00**
AB009.K40-ER40-105		1	●	076	6840751	**234,00**
AB009.K50-ER20-105		1	●	076	6840752	**260,00**
AB009.K50-ER25-105		1	●	076	6840753	**276,00**
AB009.K50-ER32-105		1	●	076	6840754	**292,00**
AB009.K50-ER40-105		1	●	076	6840755	**325,00**
AB019-H100-P06-085		1	●	076	8156077	**967,00**
AB019-H100-P06-120		1	●	076	8156083	**1.063,00**
AB019-H100-P08-085		1	●	076	8156078	**967,00**
AB019-H100-P08-120		1	●	076	8156084	**1.063,00**
AB019-H100-P10-090		1	●	076	8156079	**967,00**
AB019-H100-P10-120		1	●	076	8156085	**1.063,00**
AB019-H100-P12-095		1	●	076	8156080	**967,00**
AB019-H100-P12-120		1	●	076	8156086	**1.063,00**
AB019-H100-P16-100		1	●	076	8156081	**967,00**
AB019-H100-P16-120		1	●	076	8156087	**1.063,00**
AB019-H100-P20-105		1	●	076	8156082	**967,00**

Bezeichnung / Designation	Sorte / Grade	VE / US		Disc. Gr.	Article No.	EURO Stück / piece
AB019-H100-P20-120		1	●	076	8156088	1.063,00
AB019-H63-P06-080		1	●	076	8156062	716,00
AB019-H63-P06-120		1	●	076	8156070	788,00
AB019-H63-P08-080		1	●	076	8156063	716,00
AB019-H63-P08-120		1	●	076	8156071	788,00
AB019-H63-P10-085		1	●	076	8156065	716,00
AB019-H63-P10-120		1	●	076	8156072	788,00
AB019-H63-P12-090		1	●	076	8156066	716,00
AB019-H63-P12-120		1	●	076	8156073	788,00
AB019-H63-P14-090		1	●	076	8156067	716,00
AB019-H63-P14-120		1	●	076	8156074	788,00
AB019-H63-P16-095		1	●	076	8156068	716,00
AB019-H63-P16-120		1	●	076	8156075	788,00
AB019-H63-P20-100		1	●	076	8156069	716,00
AB019-H63-P20-120		1	●	076	8156076	788,00
AB035-C4-ER11-080		1	●	077	7356505	857,00
AB035-C4-ER20-102		1	●	077	7356506	953,00
AB035-C4-ER25-122		1	●	077	7356507	1.048,00
AB035-C5-ER20-103		1	●	077	7356508	1.003,00
AB035-C5-ER25-122		1	●	077	7356509	1.103,00
AB035-C6-ER20-105		1	●	077	7356571	1.053,00
AB035-C6-ER25-124		1	●	077	7356572	1.158,00
AB035-C6-ER40-154		1	●	077	7356573	1.969,00
AB035-H100-ER20-115		1	●	077	7209441	1.153,00
AB035-H100-ER25-134		1	●	077	7209442	1.269,00
AB035-H100-ER40-164		1	●	077	7209443	2.156,00
AB035-H63-ER20-108		1	●	077	7209468	1.053,00
AB035-H63-ER25-128		1	●	077	7209469	1.158,00
AB035-H63-ER40-160		1	●	077	7209470	1.969,00
AB035-J30-ER11-082		1	●	077	7209444	852,00
AB035-J30-ER20-105		1	●	077	7209445	953,00
AB035-J30-ER25-125		1	●	077	7209446	1.006,00
AB035-J40-ER20-110		1	●	077	7209447	1.058,00
AB035-J40-ER25-130		1	●	077	7209448	1.166,00
AB035-J50-ER20-125		1	●	077	7209449	1.278,00
AB035-J50-ER25-145		1	●	077	7209460	1.408,00
AB035-J50-ER40-174		1	●	077	7209461	1.612,00
AB035-N40-ER20-105		1	●	077	5030210	1.186,00
AB035-N50-ER25-125		1	●	077	5030211	1.310,00
AB035-S40-ER20-102		1	●	077	7209462	1.058,00
AB035-S40-ER25-122		1	●	077	7209463	1.118,00
AB035-S50-ER20-106		1	●	077	7209464	1.217,00
AB035-S50-ER25-126		1	●	077	7209465	1.344,00
AB035-S50-ER40-155		1	●	077	7209466	1.543,00
AB035-W25-ER11-052		1	●	077	7209471	872,00
AB035-W25-ER20-069		1	●	077	7209472	872,00
AB035-W25-ER25-088		1	●	077	7209473	960,00
AB044.K40-W07-064		1	●	076	6840691	127,00
AB044.K40-W09-044		1	●	076	6840692	127,00
AB044.K40-W09-064		1	●	076	6840693	127,00
AB044.K40-W13-044		1	●	076	6840694	136,00
AB044.K40-W13-067		1	●	076	6840695	136,00
AB044.K40-W15-044		1	●	076	6840696	136,00
AB044.K40-W15-070		1	●	076	6840697	136,00
AB044.K40-W19-044		1	●	076	6840698	145,00
AB044.K40-W19-089		1	●	076	6840699	159,00
AB044.K40-W26-044		1	●	076	6840710	154,00
AB044.K40-W26-102		1	●	076	6840711	169,00
AB044.K40-W31-102		1	●	076	6840712	179,00
AB044.K40-W39-102		1	●	076	6840713	189,00
AB044.K50-W13-067		1	●	076	6854977	188,00
AB044.K50-W15-095		1	●	076	6854978	207,00
AB044.K50-W19-095		1	●	076	6854979	221,00
AB044.K50-W26-102		1	●	076	6855000	234,00
AB044.K50-W31-102		1	●	076	6855001	248,00
AB044.K50-W39-102		1	●	076	6855002	276,00
AB044.K50-W51-143		1	●	076	6855003	331,00
AB735-ER16		1	●	075	7847929	93,80
AB735-ER16-R035-024		1	●	075	7847446	104,00
AB735-ER16-R045-024		1	●	075	7847447	104,00

Bezeichnung / Designation	Sorte / Grade	VE / US		Disc. Gr.	Article No.	EURO Stück / piece
AB735-ER16-R050-024		1	●	075	7847448	104,00
AB735-ER20		1	●	075	7847930	97,80
AB735-ER20-R060-035		1	●	075	7847449	109,00
AB735-ER20-R070-035		1	●	075	7847920	109,00
AB735-ER20-R080-036		1	●	075	8463702	109,00
AB735-ER25		1	●	075	7847931	103,00
AB735-ER25-R060-027		1	●	075	8463703	114,00
AB735-ER25-R070-030		1	●	075	7847921	114,00
AB735-ER25-R080-030		1	●	075	7847922	114,00
AB735-ER25-R090-040		1	●	075	7847923	114,00
AB735-ER25-R100-041		1	●	075	8463704	114,00
AB735-ER32		1	●	075	7847932	110,00
AB735-ER32-R060-008		1	●	075	8463705	119,00
AB735-ER32-R070-019		1	●	075	8463706	119,00
AB735-ER32-R080-037		1	●	075	7847924	119,00
AB735-ER32-R090-037		1	●	075	7847925	119,00
AB735-ER32-R100-037		1	●	075	7847926	119,00
AB735-ER32-R110-037		1	●	075	7847927	119,00
AB735-ER32-R120-037		1	●	075	7847928	119,00
AC001-C6-B16-160		1	●	073	7834972	4.471,00
AC001-C6-B22-210		1	●	073	7834973	4.706,00
AC001-C6-B27-260		1	●	073	7834974	4.941,00
AC001-C8-B22-210		1	●	073	7834975	5.320,00
AC001-C8-B27-260		1	●	073	7834976	5.586,00
AC001-C8-B32-330		1	●	073	7834977	6.144,00
AC001-C8-B40-350		1	●	073	7834978	6.759,00
AC001-H100-B22-210		1	●	073	7835002	5.066,00
AC001-H100-B27-260		1	●	073	7835003	5.320,00
AC001-H100-B32-330		1	●	073	7835004	5.852,00
AC001-H100-B40-350		1	●	073	7835005	6.437,00
AC001-H63-B16-160		1	●	073	7834979	4.258,00
AC001-H63-B22-210		1	●	073	7835000	4.482,00
AC001-H63-B27-260		1	●	073	7835001	4.706,00
AC001-J40-B16-160		1	●	073	7835012	4.258,00
AC001-J40-B22-210		1	●	073	7835013	4.482,00
AC001-J40-B27-260		1	●	073	7835014	4.706,00
AC001-J50-B22-210		1	●	073	7835015	5.066,00
AC001-J50-B27-260		1	●	073	7835016	5.320,00
AC001-J50-B32-330		1	●	073	7835017	5.852,00
AC001-J50-B40-350		1	●	073	7835018	6.437,00
AC001-S40-B16-160		1	●	073	7835006	4.258,00
AC001-S40-B22-210		1	●	073	7835007	4.482,00
AC001-S50-B22-210		1	●	073	7835008	5.066,00
AC001-S50-B27-260		1	●	073	7835009	5.320,00
AC001-S50-B32-330		1	●	073	7835010	5.852,00
AC001-S50-B40-350		1	●	073	7835011	6.437,00
AC001.K40-B19-191		1	●	073	7972448	4.258,00
AC001.K40-B19-229		1	●	073	7972449	4.482,00
AC001.K40-B26-229		1	●	073	7972890	4.482,00
AC001.K50-B19-191		1	●	073	7972891	5.066,00
AC001.K50-B19-229		1	●	073	7972892	5.066,00
AC001.K50-B26-229		1	●	073	7972893	5.320,00
AC001.K50-B26-305		1	●	073	7972894	5.852,00
AC001.K50-B38-349		1	●	073	7972895	6.437,00
AC060-C6-T18-185		1	●	073	7975785	3.308,00
AC060-C6-T22-185		1	●	073	7975786	3.308,00
AC060-C6-T28-185		1	●	073	7975787	3.308,00
AC060-C6-T28-235		1	●	073	7975788	3.482,00
AC060-H100-T22-235		1	●	073	7974898	3.749,00
AC060-H100-T28-235		1	●	073	7974899	3.749,00
AC060-H100-T28-285		1	●	073	7975770	3.937,00
AC060-H63-T18-185		1	●	073	7974894	3.151,00
AC060-H63-T22-185		1	●	073	7974895	3.151,00
AC060-H63-T28-185		1	●	073	7974896	3.151,00
AC060-H63-T28-235		1	●	073	7974897	3.317,00
AC060-J40-T18-185		1	●	073	7975778	3.151,00
AC060-J40-T22-185		1	●	073	7975779	3.151,00
AC060-J40-T28-185		1	●	073	7975780	3.151,00
AC060-J40-T28-235		1	●	073	7975781	3.317,00
AC060-J50-T22-235		1	●	073	7975782	3.749,00

Bezeichnung / Designation	Sorte / Grade	VE / US		Disc. Gr.	Article No.	EURO Stück / piece
AC060-J50-T28-235		1	●	073	7975783	3.749,00
AC060-J50-T28-285		1	●	073	7975784	3.937,00
AC060-S40-T18-185		1	●	073	7975771	3.151,00
AC060-S40-T22-185		1	●	073	7975772	3.151,00
AC060-S40-T28-185		1	●	073	7975773	3.151,00
AC060-S40-T28-235		1	●	073	7975774	3.317,00
AC060-S50-T22-235		1	●	073	7975775	3.749,00
AC060-S50-T28-235		1	●	073	7975776	3.749,00
AC060-S50-T28-285		1	●	073	7975777	3.937,00
AC22410TR-UNC1/4		1	■	TH1	7569285*	59,30
AC22410TR-UNC3/8		1	■	TH1	7569287*	88,90
AC22460TR-UNC1/2		1	■	TH1	7569288*	109,00
AC22460TR-UNC5/8		1	■	TH1	7569289*	140,00
ACGT060204R-G65	WKP25S	10	●	004	7535374	18,83
ACGT060204R-G65	WKP35G	10	●	004	7528707	22,59
ACGT060204R-G65	WKP35S	10	●	004	7677418	18,83
ACGT060204R-G65	WSM35G	10	●	004	8284928	19,76
ACGT060204R-G65	WSM35S	10	■	004	7528705*	19,76
ACGT060204R-G65	WSP45G	10	●	004	8112763	19,78
ACGT060204R-M85	WK10	10	●	004	7528708	15,21
ACGT060204R-M85	WXN15	10	●	004	7528709	18,83
ACMT060202R-G55	WKP35G	10	●	004	7528589	17,36
ACMT060202R-G55	WKP35S	10	●	004	7677430	14,48
ACMT060202R-G55	WSP45G	10	●	004	7924187	15,20
ACMT060204R-G55	WAK15	10	●	004	7528691	14,48
ACMT060204R-G55	WKK25G	10	●	004	8284916	15,20
ACMT060204R-G55	WKK25S	10	■	004	7528692*	15,20
ACMT060204R-G55	WKP25S	10	●	004	7535373	14,48
ACMT060204R-G55	WKP35G	10	●	004	7528693	17,36
ACMT060204R-G55	WKP35S	10	●	004	7677431	14,48
ACMT060204R-G55	WSM35G	10	●	004	8284929	15,20
ACMT060204R-G55	WSM35S	10	■	004	7528694*	15,20
ACMT060204R-G55	WSP45G	10	●	004	7924188	15,20
ACMT060204R-K55	WKP35G	10	●	004	7528702	17,36
ACMT060204R-K55	WKP35S	10	●	004	7677432	14,48
ACMT060204R-K55	WSM35G	10	●	004	8284950	15,20
ACMT060204R-K55	WSM35S	10	■	004	7528703*	15,20
ACMT060204R-K55	WSP45G	10	●	004	8112764	15,20
ACMT060208R-G55	WKP35G	10	●	004	7528696	17,36
ACMT060208R-G55	WKP35S	10	●	004	7677433	14,48
ACMT060208R-G55	WSP45G	10	●	004	7924189	15,20
ACMT060212R-G55	WKP35G	10	●	004	7528698	17,36
ACMT060212R-G55	WKP35S	10	●	004	7677434	14,48
ACMT060212R-G55	WSP45G	10	●	004	7924190	15,20
ACMT060216R-G55	WKP35G	10	●	004	7528700	17,36
ACMT060216R-G55	WKP35S	10	●	004	7677435	14,48
ACMT060216R-G55	WSP45G	10	●	004	7924191	15,20
ADGT0803PER-D51	WKP25S	10	●	004	6071753	22,76
ADGT0803PER-D51	WKP35G	10	●	004	7169047	27,30
ADGT0803PER-D51	WKP35S	10	●	004	5885944	22,76
ADGT0803PER-D51	WSP45G	10	●	004	8201853	23,90
ADGT0803PER-D51	WSP45S	10	■	004	6427987*	23,90
ADGT0803PER-F56	WSM35G	10	●	004	8441402	23,89
ADGT0803PER-F56	WSM35S	10	●	004	6158810	23,89
ADGT0803PER-F56	WSP45G	10	●	004	8201854	23,90
ADGT0803PER-F56	WSP45S	10	■	004	6427989*	23,90
ADGT10T330R-D67	WSP45G	10	●	004	8201855	25,20
ADGT10T330R-D67	WSP45S	10	■	004	6428001*	25,20
ADGT10T3PER-D67	WKP35G	10	●	004	7170548	28,80
ADGT10T3PER-D67	WKP35S	10	●	004	5881321	23,97
ADGT10T3PER-D67	WSM35G	10	●	004	8441415	25,20
ADGT10T3PER-D67	WSM35S	10	●	004	6158815	25,20
ADGT10T3PER-D67	WSP45G	10	●	004	8201856	25,20
ADGT10T3PER-D67	WSP45S	10	■	004	6428002*	25,20
ADGT10T3PER-G77	WSM35G	10	●	004	8441398	25,20
ADGT10T3PER-G77	WSM35S	10	●	004	7058500	25,20
ADGT10T3PER-G77	WSP45G	10	●	004	8201857	25,20
ADGT10T3PER-G77	WSP45S	10	■	004	6428003*	25,20
ADGT120404R-F56	WSP45G	10	●	004	8112765	25,80
ADGT120416R-D67	WSP45G	10	●	004	8112766	25,80

Bezeichnung / Designation	Sorte / Grade	VE / US		Disc. Gr.	Article No.	EURO Stück / piece
ADGT120430R-F56	WSP45G	10	●	004	8112767	25,80
ADGT120440R-F56	WSP45G	10	●	004	8112768	25,80
ADGT1204PER-D51	WKP25S	10	●	004	6072294	24,56
ADGT1204PER-D51	WKP35G	10	●	004	7170564	29,50
ADGT1204PER-D51	WKP35S	10	●	004	5886133	24,56
ADGT1204PER-D51	WSP45G	10	●	004	8112769	25,80
ADGT1204PER-D56	WKP25S	10	●	004	6072295	24,56
ADGT1204PER-D56	WKP35S	10	●	004	5886134	24,56
ADGT1204PER-D56	WSP45G	10	●	004	8112800	25,80
ADGT1204PER-D67	WKP35S	10	●	004	5881322	24,56
ADGT1204PER-D67	WSM35G	10	●	004	8284951	25,80
ADGT1204PER-D67	WSM35S	10	■	004	6158817*	25,80
ADGT1204PER-D67	WSP45G	10	●	004	8112801	25,80
ADGT1204PER-F56	WSM35G	10	●	004	8284952	25,80
ADGT1204PER-F56	WSM35S	10	■	004	6158840*	25,80
ADGT1204PER-F56	WSP45G	10	●	004	8112802	25,80
ADGT1204PER-G77	WSM35G	10	●	004	8284953	25,80
ADGT1204PER-G77	WSM35S	10	■	004	7058502*	25,80
ADGT1204PER-G77	WSP45G	10	●	004	8112803	25,80
ADGT160612R-F56	WSP45G	10	●	004	8112804	29,70
ADGT160616R-D67	WSP45G	10	●	004	8112805	29,70
ADGT160616R-F56	WSP45G	10	●	004	8112806	29,70
ADGT160620R-F56	WSP45G	10	●	004	8112807	29,70
ADGT160632R-F56	WSP45G	10	●	004	8112808	29,70
ADGT160640R-F56	WSP45G	10	●	004	8112809	29,70
ADGT160650R-F56	WSM35S	10	●	004	7058504	29,70
ADGT1606PER-D51	WKP25S	10	●	004	6072296	28,30
ADGT1606PER-D51	WKP35G	10	●	004	7169060	34,00
ADGT1606PER-D51	WKP35S	10	●	004	5886161	28,30
ADGT1606PER-D51	WSP45G	10	●	004	8112810	29,70
ADGT1606PER-D56	WKK25G	10	●	004	8284872	29,70
ADGT1606PER-D56	WKK25S	10	■	004	6702009*	29,70
ADGT1606PER-D56	WKP25S	10	●	004	6072298	28,30
ADGT1606PER-D56	WKP35G	10	●	004	7170586	34,00
ADGT1606PER-D56	WKP35S	10	●	004	5886162	28,30
ADGT1606PER-D56	WSP45G	10	●	004	8112811	29,70
ADGT1606PER-D67	WKP35G	10	●	004	7170547	34,00
ADGT1606PER-D67	WKP35S	10	●	004	5881323	28,30
ADGT1606PER-D67	WSM35G	10	●	004	8284954	29,70
ADGT1606PER-D67	WSM35S	10	■	004	6158852*	29,70
ADGT1606PER-D67	WSP45G	10	●	004	8112812	29,70
ADGT1606PER-F56	WSM35G	10	●	004	8284955	29,70
ADGT1606PER-F56	WSM35S	10	■	004	6158853*	29,70
ADGT1606PER-F56	WSP45G	10	●	004	8112813	29,70
ADGT1606PER-G77	WSM35G	10	●	004	8441394	29,70
ADGT1606PER-G77	WSM35S	10	●	004	7058507	29,70
ADGT1606PER-G77	WSP45G	10	●	004	8112814	29,70
ADGT1807PER-D51	WKP35G	10	●	004	7170546	38,00
ADGT1807PER-D56	WKP35G	10	●	004	7170521	38,00
ADGT1807PER-D56	WSP45G	10	●	004	8112815	33,20
ADGX10T3PER-F56	WHH15	10	●	004	6632440	29,40
ADGX10T3PER-F56	WXM15	10	●	004	6632441	26,70
ADGX1606PER-F56	WXM15	10	●	004	6632444	31,60
ADHT0803PEL-G88	WXN15	10	●	004	5150020	22,13
ADHT0803PER-G88	WK10	10	●	004	5055688	17,95
ADHT0803PER-G88	WXN15	10	●	004	5055714	22,13
ADHT10T3PER-G88	WK10	10	●	004	5641998	18,77
ADHT10T3PER-G88	WXN15	10	●	004	5641999	23,29
ADHT120416L-G88	WXN15	10	●	004	5194596	23,90
ADHT120416R-G88	WXN15	10	●	004	5157721	23,90
ADHT120430L-G88	WXN15	10	●	004	5194602	23,90
ADHT120430R-G88	WXN15	10	●	004	5157723	23,90
ADHT120440L-G88	WXN15	10	■	004	5194604*	23,90
ADHT120440R-G88	WK10	10	●	004	5157635	19,24
ADHT1204PEL-G88	WXN15	10	●	004	5150023	23,90
ADHT1204PER-G88	WK10	10	●	004	5055689	19,24
ADHT1204PER-G88	WXN15	10	●	004	5055715	23,90
ADHT160616L-G88	WXN15	10	●	004	5194606	27,60
ADHT160616R-G88	WK10	10	●	004	5157628	22,40
ADHT160616R-G88	WXN15	10	●	004	5157717	27,60

Bezeichnung / Designation	Sorte / Grade	VE / US		Disc. Gr.	Article No.	EURO Stück / piece
ADHT1606PEL-G88	WXN15	10	●	004	5150024	27,60
ADHT1606PER-G88	WK10	10	●	004	5055690	22,40
ADHT1606PER-G88	WXN15	10	●	004	5055716	27,60
ADKT0803PEL-F56	WKP35S	10	●	004	5886167	19,23
ADKT0803PEL-F56	WSP45G	10	●	004	8201858	20,19
ADKT0803PEL-F56	WSP45S	10	■	004	6412894*	20,19
ADKT0803PER-F56	WAK15	10	●	004	5055702	19,23
ADKT0803PER-F56	WKP25S	10	●	004	6071117	19,23
ADKT0803PER-F56	WKP35S	10	●	004	5886168	19,23
ADKT0803PER-F56	WSP45G	10	●	004	8201859	20,19
ADKT10T3PER-F56	WKP35S	10	●	004	5881324	20,30
ADKT10T3PER-F56	WSP45G	10	●	004	8201890	21,32
ADKT1204PEL-F56	WKP35S	10	●	004	5886169	20,80
ADKT1204PEL-F56	WSP45G	10	●	004	8201891	21,84
ADKT1204PER-F56	WAK15	10	●	004	5055706	20,80
ADKT1204PER-F56	WKP25S	10	●	004	6071150	20,80
ADKT1204PER-F56	WKP35S	10	●	004	5886200	20,80
ADKT1204PER-F56	WSP45G	10	●	004	8201892	21,84
ADKT1204PER-F56	WSP45S	10	■	004	6412899*	21,84
ADKT1606PEL-F56	WKP35S	10	●	004	5886201	23,97
ADKT1606PEL-F56	WSP45G	10	●	004	8201893	25,20
ADKT1606PEL-F56	WSP45S	10	■	004	6412970*	25,20
ADKT1606PER-F56	WAK15	10	●	004	5055710	23,97
ADKT1606PER-F56	WKP25S	10	●	004	6071151	23,97
ADKT1606PER-F56	WKP35S	10	●	004	5881325	23,97
ADKT1606PER-F56	WSP45G	10	●	004	8201894	25,20
ADKT1606PER-F56	WSP45S	10	■	004	6412971*	25,20
ADMT080302R-F56	WKP35G	10	●	004	7169049	21,00
ADMT080302R-F56	WKP35S	10	●	004	5886202	17,48
ADMT080302R-F56	WSM35G	10	●	004	8441409	18,37
ADMT080302R-F56	WSM35S	10	●	004	6158862	18,37
ADMT080302R-F56	WSP45G	10	●	004	8201895	18,37
ADMT080302R-F56	WSP45S	10	■	004	6428201*	18,37
ADMT080304L-F56	WKP35G	10	●	004	7170508	21,00
ADMT080304L-F56	WKP35S	10	●	004	5886203	17,48
ADMT080304L-F56	WSP45G	10	●	004	8201896	18,37
ADMT080304L-F56	WSP45S	10	■	004	6428202*	18,37
ADMT080304R-D56	WAK15	10	●	004	5042547	17,48
ADMT080304R-D56	WKP25S	10	●	004	6068632	17,48
ADMT080304R-D56	WKP35G	10	●	004	7170576	21,00
ADMT080304R-D56	WKP35S	10	●	004	5886204	17,48
ADMT080304R-D56	WSP45G	10	●	004	8201897	18,37
ADMT080304R-D56	WSP45S	10	■	004	6428203*	18,37
ADMT080304R-F56	WAK15	10	●	004	5042550	17,48
ADMT080304R-F56	WKP25S	10	●	004	6068635	17,48
ADMT080304R-F56	WKP35G	10	●	004	7170595	21,00
ADMT080304R-F56	WKP35S	10	●	004	5886205	17,48
ADMT080304R-F56	WSM35G	10	●	004	8441417	18,37
ADMT080304R-F56	WSM35S	10	●	004	6158864	18,37
ADMT080304R-F56	WSP45G	10	●	004	8201898	18,37
ADMT080304R-F56	WSP45S	10	■	004	6428204*	18,37
ADMT080304R-G56	WKP35G	10	■	004	7170527*	21,00
ADMT080304R-G56	WKP35S	10	●	004	5886206	17,48
ADMT080304R-G56	WSP45G	10	●	004	8201899	18,37
ADMT080304R-G56	WSP45S	10	■	004	7057740*	18,37
ADMT080308L-F56	WKP35S	10	●	004	5886207	17,48
ADMT080308L-F56	WSP45G	10	●	004	8201900	18,37
ADMT080308L-F56	WSP45S	10	■	004	6428205*	18,37
ADMT080308R-F56	WKP35G	10	●	004	7170601	21,00
ADMT080308R-F56	WKP35S	10	●	004	5886208	17,48
ADMT080308R-F56	WSM35G	10	●	004	8441420	18,37
ADMT080308R-F56	WSM35S	10	●	004	6158893	18,37
ADMT080308R-F56	WSP45G	10	●	004	7924192	18,37
ADMT080312R-F56	WKP35S	10	●	004	5886209	17,48
ADMT080312R-F56	WSM35G	10	●	004	8441396	18,37
ADMT080312R-F56	WSM35S	10	●	004	6158895	18,37
ADMT080312R-F56	WSP45G	10	●	004	8201901	18,37
ADMT080312R-F56	WSP45S	10	■	004	6428207*	18,37
ADMT080316R-F56	WKP35S	10	●	004	5886210	17,48
ADMT080316R-F56	WSM35G	10	●	004	8441419	18,37

Bezeichnung / Designation	Sorte / Grade	VE / US		Disc. Gr.	Article No.	EURO Stück / piece
ADMT080316R-F56	WSM35S	10	●	004	6158898	18,37
ADMT080316R-F56	WSP45G	10	●	004	8201902	18,37
ADMT080316R-F56	WSP45S	10	■	004	6428208*	18,37
ADMT080320R-F56	WKP35S	10	●	004	5886211	17,48
ADMT080320R-F56	WSM35G	10	●	004	8441413	18,37
ADMT080320R-F56	WSM35S	10	●	004	6159211	18,37
ADMT080320R-F56	WSP45G	10	●	004	8201903	18,37
ADMT080320R-F56	WSP45S	10	■	004	6428209*	18,37
ADMT10T304R-F56	WKP35G	10	●	004	7170561	22,13
ADMT10T304R-F56	WKP35S	10	●	004	6032594	18,44
ADMT10T304R-F56	WSM35G	10	●	004	8441411	19,38
ADMT10T304R-F56	WSM35S	10	●	004	6159213	19,38
ADMT10T304R-F56	WSP45G	10	●	004	8201904	19,37
ADMT10T304R-F56	WSP45S	10	■	004	6428210*	19,37
ADMT10T308R-F56	WKK25G	10	●	004	8441407	19,38
ADMT10T308R-F56	WKK25S	10	●	004	6702072	19,38
ADMT10T308R-F56	WKP25S	10	●	004	6068636	18,44
ADMT10T308R-F56	WKP35G	10	●	004	7169068	22,13
ADMT10T308R-F56	WKP35S	10	●	004	5881326	18,44
ADMT10T308R-F56	WSM35G	10	●	004	8441421	19,38
ADMT10T308R-F56	WSM35S	10	●	004	6159215	19,38
ADMT10T308R-F56	WSM45X	10	●	004	6841370	23,45
ADMT10T308R-F56	WSP45G	10	●	004	7924193	19,37
ADMT10T308R-G56	WKP35G	10	●	004	7170533	22,13
ADMT10T308R-G56	WSM35G	10	●	004	8441397	19,38
ADMT10T308R-G56	WSM35S	10	●	004	6159241	19,38
ADMT10T308R-G56	WSP45G	10	●	004	8201905	19,37
ADMT10T308R-G56	WSP45S	10	■	004	7057741*	19,37
ADMT10T312R-F56	WKP35G	10	●	004	7170538	22,13
ADMT10T312R-F56	WKP35S	10	●	004	5886212	18,44
ADMT10T312R-F56	WSM35G	10	●	004	8441416	19,38
ADMT10T312R-F56	WSM35S	10	●	004	6159243	19,38
ADMT10T312R-F56	WSP45G	10	●	004	8201906	19,37
ADMT10T312R-F56	WSP45S	10	■	004	6428212*	19,37
ADMT10T316R-F56	WKP35G	10	●	004	7170532	22,13
ADMT10T316R-F56	WKP35S	10	●	004	5886214	18,44
ADMT10T316R-F56	WSM35G	10	●	004	8441408	19,38
ADMT10T316R-F56	WSM35S	10	●	004	6159245	19,38
ADMT10T316R-F56	WSM45X	10	●	004	6841371	23,45
ADMT10T316R-F56	WSP45G	10	●	004	8201907	19,37
ADMT10T316R-F56	WSP45S	10	■	004	6428213*	19,37
ADMT10T320R-F56	WKP35G	10	●	004	7170549	22,13
ADMT10T320R-F56	WKP35S	10	●	004	5886218	18,44
ADMT10T320R-F56	WSM35G	10	●	004	8441412	19,38
ADMT10T320R-F56	WSM35S	10	●	004	6159270	19,38
ADMT10T320R-F56	WSM45X	10	●	004	7107142	23,45
ADMT10T320R-F56	WSP45G	10	●	004	8201908	19,37
ADMT10T320R-F56	WSP45S	10	■	004	6428214*	19,37
ADMT10T325R-F56	WKP35G	10	●	004	7170513	22,13
ADMT10T325R-F56	WSM35G	10	●	004	8441360	19,38
ADMT10T325R-F56	WSM35S	10	●	004	6159273	19,38
ADMT10T325R-F56	WSP45G	10	●	004	8201909	19,37
ADMT10T325R-F56	WSP45S	10	■	004	6428216*	19,37
ADMT10T330R-F56	WKP35G	10	●	004	7170528	22,13
ADMT10T330R-F56	WKP35S	10	●	004	5886231	18,44
ADMT10T330R-F56	WSM35G	10	●	004	8441414	19,38
ADMT10T330R-F56	WSM35S	10	●	004	6159303	19,38
ADMT10T330R-F56	WSP45G	10	●	004	8201910	19,37
ADMT10T330R-F56	WSP45S	10	■	004	6428217*	19,37
ADMT10T332R-F56	WKP35G	10	■	004	7170507*	22,13
ADMT10T332R-F56	WKP35S	10	●	004	5886232	18,44
ADMT10T332R-F56	WSM35G	10	●	004	8441418	19,38
ADMT10T332R-F56	WSM35S	10	●	004	6159337	19,38
ADMT10T332R-F56	WSM45X	10	●	004	7795438	23,45
ADMT10T332R-F56	WSP45G	10	●	004	8201911	19,37
ADMT10T332R-F56	WSP45S	10	■	004	6428218*	19,37
ADMT120404R-F56	WKP35G	10	●	004	7170598	22,70
ADMT120404R-F56	WKP35S	10	●	004	5886235	18,92
ADMT120404R-F56	WSM35G	10	●	004	8284956	19,87
ADMT120404R-F56	WSM35S	10	■	004	6159365*	19,87

Bezeichnung / Designation	Sorte / Grade	VE / US		Disc. Gr.	Article No.	EURO Stück / piece
ADMT120404R-F56	WSP45G	10	●	004	8112816	19,87
ADMT120408L-F56	WKP35G	10	●	004	7170550	22,70
ADMT120408L-F56	WKP35S	10	●	004	5886236	18,92
ADMT120408L-F56	WSP45G	10	●	004	8112817	19,87
ADMT120408R-D56	WAK15	10	●	004	5040519	18,92
ADMT120408R-D56	WKK25G	10	●	004	8284879	19,87
ADMT120408R-D56	WKK25S	10	■	004	6702073*	19,87
ADMT120408R-D56	WKP25S	10	●	004	6068707	18,92
ADMT120408R-D56	WKP35G	10	●	004	7170610	22,70
ADMT120408R-D56	WKP35S	10	●	004	5886237	18,92
ADMT120408R-D56	WSP45G	10	●	004	8112818	19,87
ADMT120408R-F56	WAK15	10	●	004	5040522	18,92
ADMT120408R-F56	WKK25G	10	●	004	8284882	19,87
ADMT120408R-F56	WKK25S	10	■	004	6702074*	19,87
ADMT120408R-F56	WKP25S	10	●	004	6068708	18,92
ADMT120408R-F56	WKP35G	10	●	004	7169071	22,70
ADMT120408R-F56	WKP35S	10	●	004	5881328	18,92
ADMT120408R-F56	WSM35G	10	●	004	8284957	19,87
ADMT120408R-F56	WSM35S	10	■	004	6159367*	19,87
ADMT120408R-F56	WSM45X	10	●	004	6841373	24,03
ADMT120408R-F56	WSP45G	10	●	004	7924194	19,87
ADMT120408R-G56	WKP35G	10	●	004	7170559	22,70
ADMT120408R-G56	WKP35S	10	●	004	5881329	18,92
ADMT120408R-G56	WSM35G	10	●	004	8284958	19,87
ADMT120408R-G56	WSM35S	10	■	004	6159369*	19,87
ADMT120408R-G56	WSP45G	10	●	004	8112819	19,87
ADMT120412R-F56	WKP35G	10	●	004	7170570	22,70
ADMT120412R-F56	WKP35S	10	●	004	5886238	18,92
ADMT120412R-F56	WSM35G	10	●	004	8284959	19,87
ADMT120412R-F56	WSM35S	10	■	004	6159383*	19,87
ADMT120412R-F56	WSP45G	10	●	004	8112820	19,87
ADMT120416L-F56	WKP35G	10	●	004	7170530	22,70
ADMT120416L-F56	WKP35S	10	●	004	5886239	18,92
ADMT120416L-F56	WSP45G	10	●	004	8112821	19,87
ADMT120416R-F56	WKP35G	10	●	004	7170584	22,70
ADMT120416R-F56	WKP35S	10	●	004	5886270	18,92
ADMT120416R-F56	WSM35G	10	●	004	8284960	19,87
ADMT120416R-F56	WSM35S	10	■	004	6159386*	19,87
ADMT120416R-F56	WSP45G	10	●	004	8112822	19,87
ADMT120420R-F56	WKP35G	10	●	004	7170571	22,70
ADMT120420R-F56	WKP35S	10	●	004	5886271	18,92
ADMT120420R-F56	WSM35G	10	●	004	8284961	19,87
ADMT120420R-F56	WSM35S	10	■	004	6159410*	19,87
ADMT120420R-F56	WSP45G	10	●	004	8112823	19,87
ADMT120425L-F56	WKP35S	10	●	004	5886272	18,92
ADMT120425L-F56	WSP45G	10	●	004	8201912	19,87
ADMT120425L-F56	WSP45S	10	■	004	7057743*	19,87
ADMT120425R-F56	WKP35G	10	●	004	7170545	22,70
ADMT120425R-F56	WKP35S	10	●	004	5886274	18,92
ADMT120425R-F56	WSP45G	10	●	004	8112824	19,87
ADMT120430L-F56	WKP35S	10	●	004	5886275	18,92
ADMT120430L-F56	WSP45G	10	●	004	8112825	19,87
ADMT120430R-F56	WKP35G	10	●	004	7170579	22,70
ADMT120430R-F56	WKP35S	10	●	004	5886276	18,92
ADMT120430R-F56	WSM35G	10	●	004	8284962	19,87
ADMT120430R-F56	WSM35S	10	■	004	6159413*	19,87
ADMT120430R-F56	WSM45X	10	●	004	6841377	24,03
ADMT120430R-F56	WSP45G	10	●	004	8112826	19,87
ADMT120430R-F56	WSP45S	10	■	004	6428271*	19,87
ADMT120432R-F56	WKP35G	10	●	004	7170589	22,70
ADMT120432R-F56	WKP35S	10	●	004	5886277	18,92
ADMT120432R-F56	WSM35G	10	●	004	8284963	19,87
ADMT120432R-F56	WSM35S	10	■	004	6159414*	19,87
ADMT120432R-F56	WSP45G	10	●	004	8112827	19,87
ADMT120440L-F56	WKP35G	10	●	004	7170518	22,70
ADMT120440L-F56	WSP45G	10	●	004	8112828	19,87
ADMT120440R-F56	WKP35G	10	●	004	7170552	22,70
ADMT120440R-F56	WKP35S	10	●	004	5886279	18,92
ADMT120440R-F56	WSM35G	10	●	004	8284964	19,87
ADMT120440R-F56	WSM35S	10	■	004	6159415*	19,87

Bezeichnung / Designation	Sorte / Grade	VE / US		Disc. Gr.	Article No.	EURO Stück / piece
ADMT120440R-F56	WSM45X	10	●	004	6841379	24,03
ADMT120440R-F56	WSP45G	10	●	004	8112829	19,87
ADMT160608L-F56	WKP35G	10	●	004	7170585	26,10
ADMT160608L-F56	WKP35S	10	●	004	5886290	21,74
ADMT160608L-F56	WSP45G	10	●	004	8112830	22,83
ADMT160608R-D56	WAK15	10	●	004	5043184	21,74
ADMT160608R-D56	WKK25G	10	●	004	8284876	22,83
ADMT160608R-D56	WKK25S	10	■	004	6702075*	22,83
ADMT160608R-D56	WKP25S	10	●	004	6068709	21,74
ADMT160608R-D56	WKP35G	10	●	004	7170613	26,10
ADMT160608R-D56	WKP35S	10	●	004	5886293	21,74
ADMT160608R-D56	WSP45G	10	●	004	8112831	22,83
ADMT160608R-F56	WAK15	10	●	004	5043186	21,74
ADMT160608R-F56	WKK25G	10	●	004	8284862	22,83
ADMT160608R-F56	WKK25S	10	■	004	6702076*	22,83
ADMT160608R-F56	WKP25S	10	●	004	6068841	21,74
ADMT160608R-F56	WKP35G	10	●	004	7169073	26,10
ADMT160608R-F56	WKP35S	10	●	004	5881361	21,74
ADMT160608R-F56	WSM35G	10	●	004	8284965	22,83
ADMT160608R-F56	WSM35S	10	■	004	6159416*	22,83
ADMT160608R-F56	WSM45X	10	●	004	6841380	27,60
ADMT160608R-F56	WSP45G	10	●	004	7924195	22,83
ADMT160608R-G56	WKP35G	10	●	004	7170563	26,10
ADMT160608R-G56	WKP35S	10	●	004	5881362	21,74
ADMT160608R-G56	WSM35G	10	●	004	8284966	22,83
ADMT160608R-G56	WSM35S	10	■	004	6159418*	22,83
ADMT160608R-G56	WSP45G	10	●	004	8112832	22,83
ADMT160612R-F56	WKP35G	10	●	004	7170597	26,10
ADMT160612R-F56	WKP35S	10	●	004	5886294	21,74
ADMT160612R-F56	WSM35G	10	●	004	8284967	22,83
ADMT160612R-F56	WSM35S	10	■	004	6159419*	22,83
ADMT160612R-F56	WSM45X	10	●	004	6841381	27,60
ADMT160612R-F56	WSP45G	10	●	004	8112833	22,83
ADMT160616L-F56	WKP35G	10	●	004	7170511	26,10
ADMT160616L-F56	WKP35S	10	●	004	5886295	21,74
ADMT160616L-F56	WSP45G	10	●	004	8112834	22,83
ADMT160616R-F56	WKP35G	10	●	004	7170578	26,10
ADMT160616R-F56	WKP35S	10	●	004	5886296	21,74
ADMT160616R-F56	WSM35G	10	●	004	8284968	22,83
ADMT160616R-F56	WSM35S	10	■	004	6159440*	22,83
ADMT160616R-F56	WSM45X	10	●	004	6841382	27,60
ADMT160616R-F56	WSP45G	10	●	004	8112835	22,83
ADMT160620R-F56	WKP35G	10	●	004	7170591	26,10
ADMT160620R-F56	WKP35S	10	●	004	5886297	21,74
ADMT160620R-F56	WSM35G	10	●	004	8284969	22,83
ADMT160620R-F56	WSM35S	10	■	004	6159441*	22,83
ADMT160620R-F56	WSP45G	10	●	004	8112836	22,83
ADMT160625L-F56	WKP35G	10	●	004	7170502	26,10
ADMT160625L-F56	WSP45G	10	●	004	8201913	22,83
ADMT160625L-F56	WSP45S	10	■	004	7057748*	22,83
ADMT160625R-F56	WKP35G	10	●	004	7170551	26,10
ADMT160625R-F56	WKP35S	10	●	004	5886299	21,74
ADMT160625R-F56	WSM35G	10	●	004	8284970	22,83
ADMT160625R-F56	WSM35S	10	■	004	6159443*	22,83
ADMT160625R-F56	WSP45G	10	●	004	8112837	22,83
ADMT160630L-F56	WKP35G	10	●	004	7170524	26,10
ADMT160630L-F56	WKP35S	10	●	004	5886300	21,74
ADMT160630L-F56	WSP45G	10	●	004	8112838	22,83
ADMT160630R-F56	WKP35G	10	●	004	7170565	26,10
ADMT160630R-F56	WKP35S	10	●	004	5886301	21,74
ADMT160630R-F56	WSM35G	10	●	004	8284971	22,83
ADMT160630R-F56	WSM35S	10	■	004	6159445*	22,83
ADMT160630R-F56	WSM45X	10	●	004	6841384	27,60
ADMT160630R-F56	WSP45G	10	●	004	8112839	22,83
ADMT160632R-F56	WKP35G	10	●	004	7170554	26,10
ADMT160632R-F56	WKP35S	10	●	004	5886302	21,74
ADMT160632R-F56	WSM35G	10	●	004	8284972	22,83
ADMT160632R-F56	WSM35S	10	■	004	6159447*	22,83
ADMT160632R-F56	WSP45G	10	●	004	8112840	22,83
ADMT160640L-F56	WKP35G	10	●	004	7170510	26,10

Bezeichnung / Designation	Sorte / Grade	VE / US		Disc. Gr.	Article No.	EURO Stück / piece
ADMT160640L-F56	WKP35S	10	●	004	5886303	21,74
ADMT160640L-F56	WSP45G	10	●	004	8201914	22,83
ADMT160640L-F56	WSP45S	10	■	004	6428285[1]	22,83
ADMT160640R-F56	WKP35G	10	●	004	7170583	26,10
ADMT160640R-F56	WKP35S	10	●	004	5886304	21,74
ADMT160640R-F56	WSM35G	10	●	004	8284973	22,83
ADMT160640R-F56	WSM35S	10	■	004	6159460[1]	22,83
ADMT160640R-F56	WSP45G	10	●	004	8112841	22,83
ADMT160650R-F56	WKP35G	10	●	004	7170553	26,10
ADMT160650R-F56	WKP35S	10	●	004	5886305	21,74
ADMT160650R-F56	WSM35G	10	●	004	8284974	22,83
ADMT160650R-F56	WSM35S	10	■	004	6159461[1]	22,83
ADMT160650R-F56	WSP45G	10	●	004	8112842	22,83
ADMT160660R-F56	WKP35G	10	●	004	7170600	26,10
ADMT160660R-F56	WKP35S	10	●	004	5886306	21,74
ADMT160660R-F56	WSM35G	10	●	004	8284975	22,83
ADMT160660R-F56	WSM35S	10	■	004	6159463[1]	22,83
ADMT160660R-F56	WSP45G	10	●	004	8112843	22,83
ADMT180712R-D56	WKK25G	10	●	004	8284868	25,50
ADMT180712R-D56	WKK25S	10	■	004	6702077[1]	25,50
ADMT180712R-D56	WKP25S	10	●	004	6068842	24,29
ADMT180712R-D56	WKP35G	10	●	004	7170596	29,20
ADMT180712R-D56	WKP35S	10	●	004	5886307	24,29
ADMT180712R-D56	WSP45G	10	●	004	8112844	25,50
ADMT180712R-F56	WKK25G	10	●	004	8284899	25,50
ADMT180712R-F56	WKK25S	10	■	004	6702078[1]	25,50
ADMT180712R-F56	WKP25S	10	●	004	6068843	24,29
ADMT180712R-F56	WKP35G	10	●	004	7170587	29,20
ADMT180712R-F56	WKP35S	10	●	004	5886308	24,29
ADMT180712R-F56	WSP45G	10	●	004	7924196	25,50
AE2231416-UNC8	TICN	1	●	TH4	7569322	60,50
AE2231416-UNC1/4	TICN	1	●	TH1	5934651	57,90
AE2231416-UNC5/16	TICN	1	●	TH1	5934652	72,40
AE2231416-UNC3/8	TICN	1	●	TH1	5934653	86,90
AE2236416-UNC1.0	TICN	1	●	TH4	7569326	328,00
AE2236416-UNC7/16	TICN	1	●	TH4	7569323	127,00
AE2236416-UNC1/2	TICN	1	●	TH1	5934654	105,00
AE2236416-UNC9/16	TICN	1	●	TH4	7569324	156,00
AE2236416-UNC5/8	TICN	1	●	TH1	5934655	130,00
AE2236416-UNC3/4	TICN	1	●	TH1	5934656	174,00
AE2236416-UNC7/8	TICN	1	●	TH4	7569325	274,00
AE2331416-UNF12	TICN	1	■	TH4	7569327[1]	80,60
AE2331416-UNF3/8	TICN	1	●	TH1	5934660	91,20
AE2336416-UNF9/16	TICN	1	●	TH4	7569328	172,00
AE2336416-UNF5/8	TICN	1	■	TH1	5934663[1]	137,00
AE2336416-UNF3/4	TICN	1	●	TH4	7569330	258,00
AE2336416-UNF7/8	TICN	1	●	TH4	7569331	315,00
AEP2221002-UNC4	THL	1	●	TH4	6432596	53,00
AEP2221002-UNC5	THL	1	●	TH4	7569316	51,90
AEP2221002-UNC6	THL	1	●	TH4	6432597	49,40
AEP2221002-UNC8	THL	1	●	TH4	6432598	47,50
AEP2221002-UNC10	THL	1	●	TH4	6432599	51,20
AEP2221002-UNC12	THL	1	●	TH4	7569317	53,70
AEP2221002-UNC1/4	THL	1	●	TH4	6432600	58,50
AEP2221002-UNC5/16	THL	1	●	TH4	6432601	73,20
AEP2221002-UNC3/8	THL	1	●	TH4	6432602	87,80
AEP2226002-UNC7/16	THL	1	●	TH4	7569318	93,10
AEP2226002-UNC1/2	THL	1	●	TH4	6432603	108,00
AEP2226002-UNC9/16	THL	1	●	TH4	7569319	120,00
AEP2226002-UNC5/8	THL	1	●	TH4	6432604	138,00
AEP2226002-UNC3/4	THL	1	●	TH4	6432605	173,00
AEP2251302-UNC4	THL	1	●	TH4	6245705	58,30
AEP2251302-UNC5	THL	1	●	TH4	7569311	57,10
AEP2251302-UNC6	THL	1	●	TH4	6245706	54,30
AEP2251302-UNC8	THL	1	●	TH4	6245707	52,30
AEP2251302-UNC10	THL	1	●	TH4	6245708	56,30
AEP2251302-UNC12	THL	1	●	TH4	7569312	59,10
AEP2251302-UNC1/4	THL	1	●	TH4	6245709	64,40
AEP2251302-UNC5/16	THL	1	●	TH4	6245710	80,50
AEP2251302-UNC3/8	THL	1	●	TH4	6245711	96,50

Bezeichnung / Designation	Sorte / Grade	VE / US		Disc. Gr.	Article No.	EURO Stück / piece
AEP2251312-UNC1/4	THL	1	●	TH5	6245718	83,70
AEP2251312-UNC5/16	THL	1	●	TH5	6245719	105,00
AEP2251312-UNC3/8	THL	1	●	TH5	6245720	126,00
AEP2256302-UNC7/16	THL	1	●	TH4	7569313	102,00
AEP2256302-UNC1/2	THL	1	●	TH4	6245712	118,00
AEP2256302-UNC9/16	THL	1	●	TH4	7569314	132,00
AEP2256302-UNC5/8	THL	1	●	TH4	6245713	152,00
AEP2256302-UNC3/4	THL	1	●	TH4	6245714	190,00
AEP2256312-UNC1/2	THL	1	●	TH5	6245715	154,00
AEP2256312-UNC5/8	THL	1	●	TH5	6245716	198,00
AEP2256312-UNC3/4	THL	1	●	TH5	6245717	247,00
AEP2321002-UNF10	THL	1	●	TH4	6432607	56,30
AEP2321002-UNF1/4	THL	1	●	TH4	6432608	64,40
AEP2321002-UNF5/16	THL	1	●	TH4	6432609	80,50
AEP2321002-UNF3/8	THL	1	●	TH4	6432610	96,50
AEP2326002-UNF7/16	THL	1	●	TH4	6432611	105,00
AEP2326002-UNF1/2	THL	1	●	TH4	6432612	118,00
AEP2326002-UNF9/16	THL	1	■	TH4	7569320[1]	132,00
AEP2326002-UNF5/8	THL	1	●	TH4	6432613	152,00
AEP2326002-UNF3/4	THL	1	●	TH4	6432614	190,00
AEP2351302-UNF10	THL	1	●	TH4	6245722	62,00
AEP2351302-UNF1/4	THL	1	●	TH4	6245723	70,80
AEP2351302-UNF5/16	THL	1	●	TH4	6245724	88,50
AEP2351302-UNF3/8	THL	1	●	TH4	6245725	106,00
AEP2351312-UNF1/4	THL	1	●	TH5	6245730	92,10
AEP2351312-UNF5/16	THL	1	●	TH5	6245731	115,00
AEP2351312-UNF3/8	THL	1	●	TH5	6245732	138,00
AEP2356302-UNF7/16	THL	1	●	TH4	6245726	115,00
AEP2356302-UNF1/2	THL	1	●	TH4	6245727	130,00
AEP2356302-UNF9/16	THL	1	●	TH4	7569315	146,00
AEP2356302-UNF5/8	THL	1	●	TH4	6245728	167,00
AEP2356302-UNF3/4	THL	1	●	TH4	6245729	209,00
AEP2356312-UNF7/16	THL	1	●	TH5	6245733	150,00
AEP2356312-UNF1/2	THL	1	●	TH5	6245734	169,00
AEP2356312-UNF5/8	THL	1	●	TH5	6245735	217,00
AEP2356312-UNF3/4	THL	1	●	TH5	6245736	272,00
AH2034217-1/4	TAA	1	●	MS4	6519024	89,00
AH2034217-3/8	TAA	1	●	MS4	6519026	160,00
AH2034217-1/2	TAA	1	●	MS4	6519028	214,00
AH2034217-5/8	TAA	1	●	MS4	6519029	338,00
AH2034217-3/4	TAA	1	●	MS4	6519040	516,00
AH2038217-1/2-0.030	TAA	1	●	MS4	6519046	235,00
AH2038217-3/4-0.030	TAA	1	■	MS4	6519048[1]	568,00
AH2038217-5/8-0.030	TAA	1	●	MS4	6519047	372,00
AH3021138-1/8	TAX	1	●	MS4	5543425	59,40
AH3021138-3/16	TAX	1	●	MS4	5543426	62,50
AH3022118-1/16	TAX	1	●	MS2	5543372[2]	58,90
AH3023418-1/4	TAX	1	●	MS2	5543413	83,40
AH3023418-3/8	TAX	1	●	MS2	5543415	142,00
AH3023418-1/2	TAX	1	●	MS2	5543416	173,00
AH3023418-3/4	TAX	1	●	MS2	5543418	548,00
AH3023518-3/8X1.750	TAX	1	●	MS2	5543421	167,00
AH3023518-5/8X3.000	TAX	1	●	MS2	5543423	464,00
AH3023518-3/4X3.000	TAX	1	●	MS2	5543424	631,00
AH3058318-1/4	TAX	1	●	MS2	5543807	73,00
AH3058318-3/8	TAX	1	●	MS2	5543809	112,00
AH3058318-1/2	TAX	1	●	MS2	5543810	138,00
AH3068118-1/32	TAX	1	■	MS2	5543815[1]	79,70
AH3068118-1/16	TAX	1	●	MS2	5543816[2]	112,00
AH3182378-1/2	TAX	1	●	MS2	5543068	218,00
AH3E21138-E12-1/2	TAX	1	●	MS5	5831977	86,50
AH3E21138-E16-5/8	TAX	1	●	MS5	5831978	134,00
AH3E58318-E12-1/2	TAX	1	●	MS5	5835071	94,40
AH3E58318-E16-5/8	TAX	1	●	MS5	5835072	160,00
AH3E85378-E16-5/8	TAX	1	●	MS5	5831879	139,00
AH602511-1/16		1	●	MS2	5543442[2]	57,10
AH602511-1/2		1	●	MS2	5543450[2]	138,00
AH602551-1/2		1	●	MS2	5543458[2]	240,00
AH8001118-1/16	TAX	1	●	MS2	5543664[2]	72,20
AH8001118-1/8	TAX	1	●	MS2	5543666[2]	67,20

Bezeichnung / Designation	Sorte / Grade	VE / US		Disc. Gr.	Article No.	EURO Stück / piece
AH8001118-3/8	TAX	1	●	MS2	5543670[1]	136,00
AH8004128-1/4-2.500	TAX	1	●	MS4	5543782	93,00
AH8082228-1/2-0.060	TAX	1	●	MS4	5543647	216,00
AH8095118-1/4-0.020	TAX	1	●	MS2	5543536	68,80
AH8E11118-E25-1	TAX	1	●	MS5	5890038	195,00
AH8E11118-E10-3/8	TAX	1	●	MS5	5832143	67,60
AH8E11118-E12-1/2	TAX	1	●	MS5	5832144	85,10
AH8E11118-E16-5/8	TAX	1	●	MS5	5832145	132,00
AH8E11118-E20-3/4	TAX	1	●	MS5	5832146	157,00
AK100M.2.50.040.63		1	●	070	5006999	550,00
AK100M.2.50.060.80		1	●	070	5007000	562,00
AK135M.5.40.060.N8		1	○	070	6119419	781,00
AK135M.5.50.060.N8		1	○	070	6119472	781,00
AK135M.5.60.060.N8		1	○	070	6180741	973,00
AK155.7.063.050.16.HSK		1	●	076	5007100	246,00
AK155.7.063.050.22.HSK		1	●	076	5007101	210,00
AK155.7.063.060.27.HSK		1	●	076	5007102	236,00
AK155.7.063.060.32.HSK		1	●	076	5007103	236,00
AK155.7.063.060.40.HSK		1	●	076	5007104	328,00
AK155.7.100.050.22.HSK		1	●	076	5007105	262,00
AK155.7.100.050.27.HSK		1	●	076	5007106	295,00
AK155.7.100.050.32.HSK		1	●	076	5007107	295,00
AK155.7.100.060.40.HSK		1	●	076	5007108	328,00
AK155.8.C4.020.16		1	●	070	5041187	295,00
AK155.8.C5.025.16		1	●	070	5041188	311,00
AK155.8.C5.025.22		1	●	070	5041189	311,00
AK155.8.C5.030.27		1	●	070	5041190	311,00
AK155.8.C6.025.22		1	●	070	5041192	328,00
AK155.8.C6.025.27		1	●	070	5041193	328,00
AK155.8.C6.030.16		1	●	070	5041191	328,00
AK155.8.C6.035.32		1	●	070	5041194	328,00
AK155.BT40.035.16		1	●	076	6257544	160,00
AK155.BT40.035.22		1	●	076	6257546	170,00
AK155.BT40.035.27		1	●	076	6257547	192,00
AK155.BT40.065.32		1	●	076	6257549	192,00
AK155.BT50.055.16		1	●	076	6257588	221,00
AK155.BT50.055.22		1	●	076	6257630	236,00
AK155.BT50.055.27		1	●	076	6257631	266,00
AK155.BT50.055.32		1	●	076	6257632	266,00
AK155.S40.035.16		1	●	076	6256806	160,00
AK155.S40.035.22		1	●	076	6256943	170,00
AK155.S40.035.27		1	●	076	6256971	192,00
AK155.S40.050.32		1	●	076	6256972	192,00
AK155.S50.035.16		1	●	076	6256981	221,00
AK155.S50.035.22		1	●	076	6257540	236,00
AK155.S50.035.27		1	●	076	6257541	266,00
AK155.S50.035.32		1	●	076	6257543	266,00
AK155M.0.50.025.16		1	●	070	5007488	379,00
AK155M.0.50.025.22		1	●	070	5007489	379,00
AK155M.0.63.030.16		1	●	070	5007490	379,00
AK155M.0.63.030.22		1	●	070	5007491	379,00
AK155M.0.63.030.27		1	●	070	5007492	387,00
AK155M.0.63.030.32		1	●	070	5007493	402,00
AK155M.0.80.030.27		1	●	070	5007494	413,00
AK155M.0.80.030.32		1	●	070	5007495	421,00
AK155M.0.80.040.40		1	●	070	5007496	433,00
AK170.BT40.050.08		1	●	076	6258423	127,00
AK170.BT40.063.10		1	●	076	6258424	127,00
AK170.BT40.063.12		1	●	076	6257867	136,00
AK170.BT40.063.14		1	●	076	6258425	136,00
AK170.BT40.063.16		1	●	076	6257868	136,00
AK170.BT40.063.18		1	●	076	6258427	145,00
AK170.BT40.063.20		1	●	076	6257869	145,00
AK170.BT40.090.25		1	●	076	6257930	169,00
AK170.BT40.100.32		1	●	076	6257932	179,00
AK170.BT50.063.06		1	●	076	6258428	176,00
AK170.BT50.070.10		1	●	076	6258440	176,00
AK170.BT50.080.12		1	●	076	6257933	207,00
AK170.BT50.080.16		1	●	076	6257934	207,00
AK170.BT50.080.20		1	●	076	6257935	221,00

Bezeichnung / Designation	Sorte / Grade	VE / US		Disc. Gr.	Article No.	EURO Stück / piece
AK170.BT50.100.25		1	●	076	6257936	235,00
AK170.BT50.105.32		1	●	076	6257937	248,00
AK170.BT50.115.40		1	●	076	6257938	276,00
AK170.S40.050.06		1	●	076	6258309	127,00
AK170.S40.050.08		1	○	076	6258371	127,00
AK170.S40.050.10		1	○	076	6258374	127,00
AK170.S40.050.12		1	●	076	6257842	136,00
AK170.S40.063.16		1	●	076	6257845	136,00
AK170.S40.063.20		1	●	076	6257846	145,00
AK170.S40.100.25		1	●	076	6257847	169,00
AK170.S40.100.32		1	●	076	6257848	179,00
AK170.S50.063.06		1	●	076	6258378	176,00
AK170.S50.063.08		1	●	076	6258379	176,00
AK170.S50.063.10		1	●	076	6258390	176,00
AK170.S50.063.12		1	●	076	6257849	188,00
AK170.S50.063.16		1	●	076	6257862	188,00
AK170.S50.063.20		1	●	076	6257863	201,00
AK170.S50.080.25		1	●	076	6257864	235,00
AK170.S50.100.32		1	●	076	6257865	248,00
AK170.S50.100.40		1	●	076	6257866	276,00
AK182.BT30.069.12		1	●	076	6852042	268,00
AK182.BT30.090.20		1	●	076	6852043	286,00
AK182.BT40.058.12		1	●	076	6381128	288,00
AK182.BT40.072.20		1	●	076	6381129	307,00
AK182.BT50.084.20		1	●	076	6381180	467,00
AK182.BT50.090.32		1	●	076	6381181	526,00
AK182.C5.070.12		1	●	076	6852121	584,00
AK182.C5.075.20		1	●	076	6852122	623,00
AK182.C6.075.12		1	●	076	6852123	636,00
AK182.C6.080.20		1	●	076	6852124	679,00
AK182.CAT40.065.20		1	●	076	6852047	307,00
AK182.CAT50.081.32		1	●	076	6852048	526,00
AK182.H100.090.20		1	●	076	6381039	519,00
AK182.H100.100.32		1	●	076	6381079	584,00
AK182.H63.080.12		1	●	076	6380959	390,00
AK182.H63.080.20		1	●	076	6381038	415,00
AK182.S40.050.12		1	●	076	6381121	288,00
AK182.S40.065.20		1	●	076	6381125	307,00
AK182.S50.065.20		1	●	076	6381126	425,00
AK182.S50.081.32		1	●	076	6381127	526,00
AK200M.2.40.060.63		1	●	070	5020995	330,00
AK200M.2.50.030.40		1	●	070	5021528	435,00
AK200M.2.50.030.50		1	●	070	5021623	435,00
AK200M.2.50.030.63		1	●	070	5021529	450,00
AK200M.2.50.030.80		1	●	070	5021053	464,00
AK2231407-UNC2	TAFT	1	●	THP	7569435	52,00
AK2231407-UNC4	TAFT	1	●	THP	7569436	40,50
AK2231407-UNC6	TAFT	1	●	THP	7569437	39,00
AK2231407-UNC10	TAFT	1	■	THP	7569439[2]	42,50
AK2231407-UNC1/4	TAFT	1	●	THP	7569480	48,60
AK2231407-UNC5/16	TAFT	1	●	THP	7569481	60,70
AK2231407-UNC3/8	TAFT	1	●	THP	7569482	72,80
AK2236407-UNC1/2	TAFT	1	●	THP	7569483	85,00
AK2236407-UNC5/8	TAFT	1	●	THP	7569484	109,00
AK2236407-UNC3/4	TAFT	1	●	THP	7569485	146,00
AK300.7.063.100.10.HSK		1	●	076	5043225	252,00
AK300.7.063.100.16.HSK		1	●	076	5043226	270,00
AK300.7.063.100.20.HSK		1	●	076	5043227	289,00
AK300.7.063.105.10.HSK		1	●	076	5043231	252,00
AK300.7.063.105.16.HSK		1	●	076	5043232	270,00
AK300.7.063.105.20.HSK		1	●	076	5043233	289,00
AK300.7.063.120.26.HSK		1	●	076	5043228	307,00
AK300.7.063.125.26.HSK		1	●	076	5043234	307,00
AK300.7.100.100.20.HSK		1	●	076	5043229	361,00
AK300.7.100.105.20.HSK		1	●	076	5043235	361,00
AK300.7.100.120.26.HSK		1	●	076	5043230	383,00
AK300.7.100.125.26.HSK		1	●	076	5043236	383,00
AK300.BT40.070.ER16		1	●	076	6261636	160,00
AK300.BT40.070.ER20		1	●	076	6261638	170,00
AK300.BT40.070.ER25		1	●	076	6261639	181,00

Bezeichnung / Designation	Sorte / Grade	VE / US		Disc. Gr.	Article No.	EURO Stück / piece
AK300.BT40.070.ER32		1	●	076	6261640	192,00
AK300.BT40.070.ER40		1	●	076	6261641	213,00
AK300.BT40.075.ER25		1	●	076	6261646	199,00
AK300.BT40.075.ER32		1	●	076	6261647	211,00
AK300.BT40.075.ER40		1	●	076	6261650	234,00
AK300.BT40.100.ER16		1	●	076	6264964	176,00
AK300.BT40.100.ER20		1	●	076	6264965	188,00
AK300.BT40.100.ER25		1	●	076	6264966	199,00
AK300.BT40.100.ER32		1	●	076	6264967	211,00
AK300.BT40.100.ER40		1	●	076	6264968	234,00
AK300.BT40.105.ER16		1	●	076	6265000	176,00
AK300.BT40.105.ER20		1	●	076	6265001	188,00
AK300.BT40.105.ER25		1	●	076	6265002	199,00
AK300.BT40.105.ER32		1	●	076	6265003	211,00
AK300.BT40.105.ER40		1	●	076	6265004	234,00
AK300.BT50.070.ER25		1	●	076	6265007	251,00
AK300.BT50.070.ER32		1	●	076	6265008	266,00
AK300.BT50.075.ER32		1	●	076	6265063	292,00
AK300.BT50.080.ER40		1	●	076	6265009	295,00
AK300.BT50.100.ER20		1	●	076	6265124	260,00
AK300.BT50.100.ER25		1	●	076	6265126	276,00
AK300.BT50.100.ER32		1	●	076	6265128	292,00
AK300.BT50.100.ER40		1	●	076	6265129	325,00
AK300.BT50.105.ER20		1	●	076	6265180	260,00
AK300.BT50.105.ER25		1	●	076	6265181	276,00
AK300.BT50.105.ER32		1	●	076	6265182	292,00
AK300.BT50.105.ER40		1	●	076	6265183	325,00
AK300.S40.070.ER16		1	●	076	6258488	160,00
AK300.S40.070.ER25		1	●	076	6258567	181,00
AK300.S40.070.ER32		1	●	076	6258572	192,00
AK300.S40.075.ER25		1	●	076	6258782	199,00
AK300.S40.075.ER32		1	●	076	6258784	211,00
AK300.S40.100.ER16		1	●	076	6258789	176,00
AK300.S40.100.ER20		1	●	076	6258791	188,00
AK300.S40.100.ER25		1	●	076	6258794	199,00
AK300.S40.100.ER32		1	●	076	6258796	211,00
AK300.S40.105.ER16		1	●	076	6258813	176,00
AK300.S40.105.ER20		1	●	076	6258817	188,00
AK300.S40.105.ER25		1	●	076	6258819	199,00
AK300.S40.105.ER32		1	●	076	6258821	211,00
AK300.S50.070.ER25		1	●	076	6261585	251,00
AK300.S50.070.ER32		1	●	076	6261586	266,00
AK300.S50.070.ER40		1	●	076	6261587	295,00
AK300.S50.075.ER32		1	●	076	6261605	292,00
AK300.S50.100.ER20		1	●	076	6261609	260,00
AK300.S50.100.ER25		1	●	076	6261630	276,00
AK300.S50.100.ER32		1	●	076	6261631	292,00
AK300.S50.100.ER40		1	●	076	6261633	325,00
AK300.S50.105.ER25		1	●	076	6264782	276,00
AK300.S50.105.ER32		1	●	076	6264783	292,00
AK300.S50.105.ER40		1	●	076	6264784	325,00
AK300.T18.030.06		1	●	077	5193067	284,00
AK300.T22.030.06		1	●	077	5193068	284,00
AK300.T22.040.10		1	●	077	5193083	284,00
AK300.T22.045.10		1	●	077	5193086	300,00
AK300.T28.040.10		1	●	077	5193084	284,00
AK300.T28.045.10		1	●	077	5193087	300,00
AK300.T36.050.16		1	●	077	5193085	300,00
AK300.T36.055.16		1	●	077	5193088	300,00
AK300M.0.25.050.10		1	●	077	5033135	284,00
AK300M.0.25.055.10		1	●	077	5043218	300,00
AK300M.0.32.050.10		1	●	077	5033136	295,00
AK300M.0.32.055.10		1	●	077	5043219	307,00
AK300M.0.40.080.16		1	●	077	5033137	304,00
AK300M.0.40.085.16		1	●	077	5043220	318,00
AK300M.0.50.080.16		1	●	077	5033138	338,00
AK300M.0.50.080.20		1	●	077	5033139	338,00
AK300M.0.50.080.26		1	●	077	5034501	338,00
AK300M.0.50.085.16		1	●	077	5043221	354,00
AK300M.0.50.085.20		1	●	077	5043222	354,00

Bezeichnung / Designation	Sorte / Grade	VE / US		Disc. Gr.	Article No.	EURO Stück / piece
AK300M.0.63.080.26		1	●	077	5033140	382,00
AK300M.0.63.085.26		1	●	077	5043224	402,00
AK510.Z10.T09.030		1	●	070	5015985	86,10
AK510.Z10.T09.060		1	●	070	5015986	101,00
AK510.Z12.T09.060		1	●	070	5015987	101,00
AK510.Z16.T09.090		1	●	070	5015988	115,00
AK510.Z16.T14.050		1	●	070	5015230	97,20
AK510.Z16.T14.110		1	●	070	5015231	123,00
AK510.Z20.T14.108		1	●	070	5015232	123,00
AK510.Z20.T18.068		1	●	070	5015234	99,20
AK510.Z20.T18.128		1	●	070	5015235	125,00
AK510.Z25.T18.122		1	●	070	5015236	125,00
AK510.Z25.T22.072		1	●	070	5015238	105,00
AK510.Z25.T22.142		1	●	070	5015239	134,00
AK510.Z25.T28.072		1	●	070	5015242	105,00
AK510.Z25.T28.142		1	●	070	5015243	134,00
AK510.Z32.T18.178		1	●	070	5015237	148,00
AK510.Z32.T22.138		1	●	070	5015240	134,00
AK510.Z32.T28.138		1	●	070	5015244	134,00
AK510.Z32.T36.090		1	●	070	5015989	132,00
AK510.Z32.T36.140		1	●	070	5015990	153,00
AK510.Z40.T28.228		1	●	070	5015245	158,00
AK510.Z40.T36.130		1	●	070	5015991	156,00
AK510.Z40.T36.230		1	●	070	5015992	184,00
AK510.Z40.T45.080		1	●	070	5015993	143,00
AK510.Z40.T45.230		1	●	070	5015994	198,00
AK512.Z16.T14.120		1	●	070	6265817	442,00
AK512.Z20.T18.123		1	●	070	6265818	553,00
AK512.Z25.T22.122		1	●	070	6265819	796,00
AK512.Z25.T28.127		1	●	070	6266151	796,00
AK512.Z32.T28.283		1	●	070	6266152	1.238,00
AK520.N50.T18.060CO		1	●	070	5055730	299,00
AK520.N50.T22.065CO		1	●	070	5055731	300,00
AK520.N63.T22.065CO		1	●	070	5055733	305,00
AK520.N63.T28.085CO		1	●	070	5055734	317,00
AK520.N63.T28.150		1	●	070	5015228	367,00
AK520.N63.T36.095		1	●	070	5782589	332,00
AK520.N63.T45.080CO		1	●	070	5782601	321,00
AK520.N80.T36.070CO		1	●	070	5782604	403,00
AK520.N80.T45.080CO		1	●	070	5782607	411,00
AK521.T14.25.T09		1	●	070	5017260	132,00
AK521.T18.30.T14		1	●	070	5017261	132,00
AK521.T22.35.T18		1	●	070	5017262	132,00
AK521.T28.40.T22		1	●	070	5017263	132,00
AK521.T36.45.T28		1	●	070	5017264	138,00
AK521.T45.50.T36		1	●	070	5017265	138,00
AK522.TC08.30.T14		1	●	070	5017267	132,00
AK522.TC10.35.T18		1	●	070	5017268	132,00
AK522.TC12.40.T22		1	●	070	5017269	132,00
AK522.TC16.40.T28		1	●	070	5017270	132,00
AK530.H100A.T14.055		1	●	070	7671771	459,00
AK530.H100A.T18.055		1	●	070	7671772	459,00
AK530.H100A.T22.055CO		1	●	076	5055735	459,00
AK530.H100A.T22.100		1	●	076	5016072	505,00
AK530.H100A.T22.150		1	●	076	5016073	551,00
AK530.H100A.T22.200		1	●	076	5016074	597,00
AK530.H100A.T28.060CO		1	●	076	5055736	516,00
AK530.H100A.T28.110		1	●	076	5016076	568,00
AK530.H100A.T28.160		1	●	076	5016077	620,00
AK530.H100A.T28.210		1	●	076	5016078	671,00
AK530.H100A.T28.260		1	●	076	5016079	723,00
AK530.H100A.T36.070CO		1	●	076	5055737	545,00
AK530.H100A.T36.120		1	●	076	5016081	600,00
AK530.H100A.T36.170		1	●	076	5016082	654,00
AK530.H100A.T36.220		1	●	076	5016083	709,00
AK530.H100A.T36.270		1	●	076	5016084	763,00
AK530.H100A.T45.070CO		1	●	076	5055738	602,00
AK530.H100A.T45.120		1	●	076	5016086	663,00
AK530.H100A.T45.170		1	●	076	5016087	723,00
AK530.H100A.T45.220		1	●	076	5016088	783,00

Bezeichnung / Designation	Sorte / Grade	VE / US		Disc. Gr.	Article No.	EURO Stück / piece
AK530.H63A.T09.045		1	●	076	5016034	321,00
AK530.H63A.T09.070		1	●	076	5016035	321,00
AK530.H63A.T14.045		1	●	076	5015209	344,00
AK530.H63A.T14.070		1	●	076	5016037	344,00
AK530.H63A.T14.095		1	●	076	5015210	379,00
AK530.H63A.T18.050CO		1	●	076	5055739	367,00
AK530.H63A.T18.075		1	●	076	5016039	404,00
AK530.H63A.T18.100		1	●	076	5015211	404,00
AK530.H63A.T18.125		1	●	076	5016040	404,00
AK530.H63A.T18.150		1	●	076	5016041	441,00
AK530.H63A.T22.060CO		1	●	076	5055740	367,00
AK530.H63A.T22.085		1	●	076	5016042	404,00
AK530.H63A.T22.110		1	●	076	5016132	404,00
AK530.H63A.T22.135		1	●	076	5016043	441,00
AK530.H63A.T22.160		1	●	076	5016044	441,00
AK530.H63A.T28.065CO		1	●	076	5055741	413,00
AK530.H63A.T28.090		1	●	076	5016045	454,00
AK530.H63A.T28.115		1	●	076	5016133	454,00
AK530.H63A.T28.140		1	●	076	5016046	496,00
AK530.H63A.T28.165		1	●	076	5016047	496,00
AK530.H63A.T36.065CO		1	●	076	5055742	436,00
AK530.H63A.T36.090		1	●	076	5016049	480,00
AK530.H63A.T36.115		1	●	076	5016050	480,00
AK530.H63A.T45.065CO		1	●	076	5055743	482,00
AK530.H63A.T45.090		1	●	076	5016052	530,00
AK531.H100A.T22.100CO		1	●	076	5100822	505,00
AK531.H100A.T28.110CO		1	●	076	5100823	568,00
AK531.H100A.T36.120CO		1	●	076	5100824	600,00
AK531.H100A.T45.170CO		1	●	076	5100827	723,00
AK531.H63A.T18.075CO		1	●	076	5100828	404,00
AK531.H63A.T22.110CO		1	●	076	5100829	404,00
AK531.H63A.T28.115CO		1	●	076	5100830	454,00
AK531.H63A.T36.115CO		1	●	076	5100837	480,00
AK531.H63A.T45.090CO		1	●	076	5100838	530,00
AK540.BT40.T09.050		1	●	070	5026075	214,00
AK540.BT40.T14.055		1	●	070	5032742	214,00
AK540.BT40.T14.080		1	●	070	5032743	231,00
AK540.BT40.T18.060CO		1	●	070	5055744	220,00
AK540.BT40.T18.085		1	●	070	5030239	231,00
AK540.BT40.T18.110		1	●	070	5032747	246,00
AK540.BT40.T18.135		1	●	070	5032748	255,00
AK540.BT40.T22.050CO		1	●	070	6180749	214,00
AK540.BT40.T22.070CO		1	●	070	5055745	226,00
AK540.BT40.T22.095		1	●	070	5032751	235,00
AK540.BT40.T22.120		1	●	070	5032752	251,00
AK540.BT40.T22.145		1	●	070	5032753	260,00
AK540.BT40.T22.170		1	●	070	5032754	277,00
AK540.BT40.T28.050CO		1	●	070	5055746	214,00
AK540.BT40.T28.075		1	●	070	5032755	226,00
AK540.BT40.T28.100		1	●	070	5030240	240,00
AK540.BT40.T28.125		1	●	070	5032756	251,00
AK540.BT40.T28.150		1	●	070	5032757	266,00
AK540.BT40.T28.175		1	●	070	5032758	277,00
AK540.BT40.T36.075CO		1	●	070	5055747	226,00
AK540.BT40.T36.100		1	●	070	5032760	240,00
AK540.BT40.T36.125		1	●	070	5032761	251,00
AK540.BT40.T45.075CO		1	●	070	5055748	226,00
AK540.BT40.T45.100		1	●	070	5032763	240,00
AK540.BT50.T22.070CO		1	●	070	5055749	279,00
AK540.BT50.T22.120		1	●	070	5032765	314,00
AK540.BT50.T22.170		1	●	070	5032766	350,00
AK540.BT50.T22.220		1	●	070	5032767	387,00
AK540.BT50.T28.070CO		1	●	070	5055750	279,00
AK540.BT50.T28.120		1	●	070	5032769	314,00
AK540.BT50.T28.170		1	●	070	5032770	350,00
AK540.BT50.T28.220		1	●	070	5032771	387,00
AK540.BT50.T28.270		1	●	070	5032772	432,00
AK540.BT50.T36.070CO		1	●	070	5055751	279,00
AK540.BT50.T36.120		1	●	070	5032774	314,00
AK540.BT50.T36.170		1	●	070	5032775	350,00

Bezeichnung / Designation	Sorte / Grade	VE / US		Disc. Gr.	Article No.	EURO Stück / piece
AK540.BT50.T36.220		1	●	070	5032776	387,00
AK540.BT50.T36.270		1	●	070	5032777	432,00
AK540.BT50.T45.070CO		1	●	070	5055752	279,00
AK540.BT50.T45.170		1	●	070	5032780	350,00
AK540.BT50.T45.220		1	●	070	5032781	387,00
AK540.BT50.T45.270		1	●	070	5032782	432,00
AK540.S40.T09.040		1	●	070	5016090	207,00
AK540.S40.T09.090		1	●	070	5016092	231,00
AK540.S40.T14.045		1	●	070	5015173	207,00
AK540.S40.T14.070		1	●	070	5016093	218,00
AK540.S40.T14.095		1	●	070	5015174	231,00
AK540.S40.T18.040CO		1	●	070	6180742	207,00
AK540.S40.T18.050CO		1	●	070	5055753	207,00
AK540.S40.T18.075		1	●	070	5016095	218,00
AK540.S40.T18.100		1	●	070	5015176	231,00
AK540.S40.T18.125		1	●	070	5016096	248,00
AK540.S40.T18.150		1	●	070	5016097	283,00
AK540.S40.T22.040CO		1	●	070	6180747	207,00
AK540.S40.T22.060CO		1	●	070	5055754	207,00
AK540.S40.T22.085		1	●	070	5016098	231,00
AK540.S40.T22.110		1	●	070	5015178	248,00
AK540.S40.T22.135		1	●	070	5016099	263,00
AK540.S40.T22.160		1	●	070	5016100	276,00
AK540.S40.T28.040CO		1	●	070	5055755	207,00
AK540.S40.T28.065		1	●	070	5015179	207,00
AK540.S40.T28.090		1	●	070	5016102	231,00
AK540.S40.T28.115		1	●	070	5015180	248,00
AK540.S40.T28.140		1	●	070	5016103	263,00
AK540.S40.T28.165		1	●	070	5016104	276,00
AK540.S40.T36.040CO		1	●	070	5055756	207,00
AK540.S40.T36.065		1	●	070	5016106	207,00
AK540.S40.T36.090		1	●	070	5016107	231,00
AK540.S40.T36.115		1	●	070	5016108	248,00
AK540.S40.T45.040CO		1	●	070	5055757	207,00
AK540.S40.T45.065		1	●	070	5016110	207,00
AK540.S50.T22.050CO		1	●	070	5055758	263,00
AK540.S50.T22.100		1	●	070	5016113	283,00
AK540.S50.T22.150		1	●	070	5016114	339,00
AK540.S50.T22.200		1	●	070	5016115	375,00
AK540.S50.T28.050CO		1	●	070	5055759	263,00
AK540.S50.T28.100		1	●	070	5016117	283,00
AK540.S50.T28.150		1	●	070	5016118	339,00
AK540.S50.T28.200		1	●	070	5016119	375,00
AK540.S50.T28.250		1	●	070	5016120	430,00
AK540.S50.T36.050CO		1	●	070	5055760	263,00
AK540.S50.T36.100		1	●	070	5016122	283,00
AK540.S50.T36.150		1	●	070	5016123	339,00
AK540.S50.T36.200		1	●	070	5016124	375,00
AK540.S50.T36.250		1	●	070	5016125	430,00
AK540.S50.T45.050CO		1	●	070	5055761	263,00
AK540.S50.T45.100		1	●	070	5016127	283,00
AK540.S50.T45.150		1	●	070	5016128	339,00
AK540.S50.T45.200		1	●	070	5016129	375,00
AK540.S50.T45.250		1	●	070	5016130	430,00
AK541.BT40.T22.120CO		1	●	070	5150313	251,00
AK541.BT40.T28.125CO		1	●	070	5150275	251,00
AK541.BT40.T36.125CO		1	●	070	5150276	251,00
AK541.BT50.T22.120CO		1	●	070	5150282	314,00
AK541.BT50.T28.120CO		1	●	070	5150283	314,00
AK541.BT50.T36.170CO		1	●	070	5150284	350,00
AK541.S40.T18.075CO		1	●	070	5150268	218,00
AK541.S40.T22.110CO		1	●	070	5150269	248,00
AK541.S40.T28.115CO		1	●	070	5150270	248,00
AK541.S40.T36.115CO		1	●	070	5150272	248,00
AK541.S50.T22.100CO		1	●	070	5150278	283,00
AK541.S50.T28.100CO		1	●	070	5150279	283,00
AK541.S50.T36.150CO		1	●	070	5150280	339,00
AK541.S50.T45.200CO		1	●	070	5150281	375,00
AK580.C3.T14.45CO		1	●	070	6489780	358,00
AK580.C3.T18.45CO		1	●	070	6489849	358,00

Bezeichnung / Designation	Sorte / Grade	VE / US		Disc. Gr.	Article No.	EURO Stück / piece
AK580.C3.T22.45CO		1	●	070	6489872	358,00
AK580.C3.T28.55CO		1	●	070	6489892	387,00
AK580.C4.T14.45CO		1	●	070	6489782	381,00
AK580.C4.T18.45CO		1	●	070	6489870	381,00
AK580.C4.T22.45CO		1	●	070	6489890	381,00
AK580.C4.T28.55CO		1	●	070	6489893	413,00
AK580.C4.T36.55CO		1	●	070	6489894	413,00
AK580.C4.T45.55CO		1	●	070	6489896	413,00
AK580.C5.T18.45		1	●	070	5040999	429,00
AK580.C5.T22.45		1	●	070	5041000	429,00
AK580.C5.T28.55		1	●	070	5041001	460,00
AK580.C5.T36.55		1	●	070	5041002	460,00
AK580.C5.T45.55		1	●	070	5041003	460,00
AK580.C6.T14.50		1	●	070	5041004	477,00
AK580.C6.T18.50		1	●	070	5041005	477,00
AK580.C6.T22.50		1	●	070	5041006	477,00
AK580.C6.T28.60		1	●	070	5041007	511,00
AK580.C6.T36.60		1	●	070	5041008	511,00
AK580.C6.T45.60CO		1	●	070	6489898	525,00
AK580.C8.T14.56		1	●	070	7668917	562,00
AK580.C8.T18.56		1	●	070	7668918	562,00
AK580.C8.T22.56		1	●	070	7668919	562,00
AK580.C8.T28.60		1	●	070	7668940	562,00
AK580.C8.T36.60		1	●	070	7668941	562,00
AK580.C8.T45.60CO		1	●	070	7668942	562,00
AK610.UZ13.E10.006		1	●	MA1	5835464	115,00
AK610.UZ13.E10.025		1	●	MA1	5835465	115,00
AK610.UZ13.E10.051C		1	●	MA1	5835468	422,00
AK610.UZ13.E12.006		1	●	MA1	5634451	115,00
AK610.UZ13.E12.025		1	●	MA1	5634452	141,00
AK610.UZ13.E12.032C		1	●	MA1	5835472	422,00
AK610.UZ15.E10.038		1	●	MA1	5835467	169,00
AK610.UZ15.E10.051		1	●	MA1	5835466	192,00
AK610.UZ15.E10.051C		1	●	MA1	5835469	575,00
AK610.UZ15.E12.021		1	●	MA1	5634454	169,00
AK610.UZ15.E12.061		1	●	MA1	5634453	192,00
AK610.UZ15.E12.061C		1	●	MA1	5835473	575,00
AK610.UZ15.E16.006		1	●	MA1	5634459	125,00
AK610.UZ15.E16.025		1	●	MA1	5634460	153,00
AK610.UZ19.E16.021		1	●	MA1	5634462	208,00
AK610.UZ19.E16.051C		1	●	MA1	5835476	498,00
AK610.UZ19.E16.076		1	●	MA1	5634461	249,00
AK610.UZ19.E16.076C		1	●	MA1	5835477	748,00
AK610.UZ19.E20.006		1	●	MA1	5634466	136,00
AK610.UZ19.E20.025		1	●	MA1	5634467	166,00
AK610.UZ19.E20.044C		1	●	MA1	5835479	498,00
AK610.UZ26.E20.040		1	●	MA1	5634468	232,00
AK610.UZ26.E25.006		1	●	MA1	5835484	152,00
AK610.UZ31.E25.042		1	●	MA1	5835486	326,00
AK610.UZ31.E25.063		1	●	MA1	5835485	247,00
AK610.UZ31.E25.063C		1	●	MA1	5835487	741,00
AK610.Z10.E10.020		1	●	MA1	5634673	105,00
AK610.Z10.E10.050		1	●	MA1	7171619	105,00
AK610.Z10.E10.050C		1	●	MA1	5835462	314,00
AK610.Z12.E10.005		1	●	MA1	6294148	115,00
AK610.Z12.E12.022		1	●	MA1	5634448	115,00
AK610.Z12.E12.048		1	●	MA1	7171650	115,00
AK610.Z12.E12.048C		1	●	MA1	5835470	345,00
AK610.Z16.E10.005		1	●	MA1	5634672	125,00
AK610.Z16.E10.036		1	●	MA1	5634446	169,00
AK610.Z16.E10.050		1	●	MA1	5634445	192,00
AK610.Z16.E10.100C		1	●	MA1	5835463	575,00
AK610.Z16.E12.005		1	●	MA1	5634447	125,00
AK610.Z16.E12.025		1	●	MA1	5634450	169,00
AK610.Z16.E12.060		1	●	MA1	5634449	192,00
AK610.Z16.E12.090C		1	●	MA1	5835471	506,00
AK610.Z16.E16.025		1	●	MA1	6248615	153,00
AK610.Z16.E16.050		1	●	MA1	7171651	153,00
AK610.Z16.E16.080		1	●	MA1	7171652	153,00
AK610.Z16.E16.080C		1	●	MA1	5835474	460,00

Bezeichnung / Designation	Sorte / Grade	VE / US		Disc. Gr.	Article No.	EURO Stück / piece
AK610.Z20.E16.005		1	●	MA1	5634455	136,00
AK610.Z20.E16.025		1	●	MA1	5634456	166,00
AK610.Z20.E16.075		1	●	MA1	5634457	249,00
AK610.Z20.E16.118C		1	●	MA1	5835475	623,00
AK610.Z20.E20.030		1	●	MA1	5634463	166,00
AK610.Z20.E20.038C		1	●	MA1	5835478	408,00
AK610.Z20.E20.110		1	●	MA1	7171653	227,00
AK610.Z20.E20.110C		1	●	MA1	6248616	680,00
AK610.Z25.E16.054		1	●	MA1	5634458	232,00
AK610.Z25.E20.005		1	●	MA1	5634464	152,00
AK610.Z25.E25.040		1	●	MA1	5835481	185,00
AK610.Z25.E25.110		1	●	MA1	7171654	253,00
AK610.Z25.E25.120C		1	●	MA1	5835483	758,00
AK610.Z32.E20.073		1	●	MA1	5634465	326,00
AK610.Z32.E25.005		1	●	MA1	5835480	178,00
AK610.Z32.E25.045		1	●	MA1	5835482	326,00
AK631.H63A.E10.049		1	●	MA1	5930080	303,00
AK631.H63A.E12.051		1	●	MA1	5930081	322,00
AK631.H63A.E16.056		1	●	MA1	5930082	379,00
AK631.H63A.E20.053		1	●	MA1	5930083	416,00
AK631.H63A.E25.059		1	●	MA1	5930084	454,00
AK681.C5.E10.042		1	●	MA1	5930105	288,00
AK681.C5.E12.045		1	●	MA1	5930106	307,00
AK681.C5.E16.050		1	●	MA1	5930107	361,00
AK681.C5.E20.047		1	●	MA1	5930108	396,00
AK681.C5.E25.052		1	●	MA1	5930109	433,00
AK681.C6.E12.049		1	●	MA1	5930110	322,00
AK681.C6.E16.054		1	●	MA1	5930111	379,00
AK681.C6.E20.051		1	●	MA1	5930112	416,00
AK681.C6.E25.056		1	●	MA1	5930113	454,00
AN20516-M2		1	●	THP	7569503	43,50
AN20516-M2.5		1	●	THP	7569504	38,70
AN20516-M3		1	●	THP	7569505	33,80
AN20516-M4		1	●	THP	7569506	31,40
AN20516-M5		1	●	THP	7569507	33,80
AN20516-M6		1	●	THP	7569508	38,70
AN20516-M8		1	■	THP	7569509*	48,40
AN225069-STIUNC8		1	●	THP	7569498	33,80
AN225069-STIUNC6		1	●	THP	7569497	32,60
AN225069-STIUNC1/4		1	■	THP	7569500*	48,40
AN225069-STIUNC4		1	●	THP	7569496	32,60
AN225069-STIUNC2		1	●	THP	7569495	33,80
AN22516-UNC2		1	●	THP	7569487	43,50
AN22516-UNC4		1	●	THP	7569488	33,80
AN22516-UNC6		1	■	THP	7569489*	32,60
AN22516-UNC8		1	●	THP	7569490	31,40
AN22516-UNC10		1	■	THP	7569491*	33,80
AN22516-UNC1/4		1	●	THP	7569492	38,70
AN22516-UNC5/16		1	■	THP	7569493*	48,40
AN22516-UNC3/8		1	■	THP	7569494*	58,00
AN235069-STIUNF1/4		1	■	THP	7569502*	50,90
AN235069-STIUNF10		1	●	THP	7569501	42,50
AP134-CN1208	H81	1	●	095	5038528	10,37
AP134-CN1216		1	●	095	5038367	10,37
AP135-CN1616		1	●	095	5038527	18,57
AP135-CN1624	H81	1	●	095	5038529	18,57
AP136-CN1912	H81	1	●	095	5038530	28,30
AP136-CN1924	H81	1	●	095	5038531	28,30
AP137-TN1608	H81	1	●	095	5038546	10,37
AP137-TN1616	H81	1	●	095	5038547	10,37
AP138-TN2208	H81	1	●	095	5038548	12,40
AP138-TN2216	H81	1	●	095	5038549	12,40
AP141-SN1208	H81	1	●	095	5038535	10,37
AP141-SN1216	H81	1	●	095	5038536	10,37
AP142-SN1516	H81	1	●	095	5038537	18,57
AP142-SN1524	H81	1	●	095	5038538	18,57
AP143-SN1912	H81	1	●	095	5038539	28,30
AP143-SN1924	H81	1	●	095	5038540	28,30
AP144-SN2524	H81	1	●	095	5038541	48,50
AP145-DN1508	H81	1	●	095	5038544	13,23

Bezeichnung / Designation	Sorte / Grade	VE / US		Disc. Gr.	Article No.	EURO Stück / piece
AP145-DN1516	H81	1	●	095	5038545	13,23
AP146		1	●	095	5010055	12,55
AP147		1	●	095	5010056	10,37
AP148		1	●	095	5010057	12,40
AP149		1	●	095	5008483	12,40
AP153		1	●	095	5010058	11,42
AP154		1	●	095	5010070	11,42
AP155		1	●	095	5010059	12,55
AP156		1	●	095	5010060	16,67
AP157		1	●	095	5010061	14,75
AP158		1	●	095	5010062	20,41
AP161		1	●	095	5010065	19,46
AP163		1	●	095	5010066	12,55
AP165		1	●	095	5010071	12,55
AP168		1	●	095	5010068	7,29
AP169		1	●	095	5010069	7,29
AP170-WN0808		1	●	095	5038533	13,67
AP170-WN0816		1	●	095	5036619	13,67
AP171-DN1108	H81	1	●	095	5038542	7,51
AP171-DN1112	H81	1	●	095	5038543	7,51
AP172-WN0612	H81	1	●	095	5038532	7,29
AP174-WN1016		1	●	095	5038534	13,67
AP188		1	●	095	5016196	20,41
AP189-RC1204	H81	1	●	095	5547999	8,00
AP190-RC09T3	H81	1	●	095	5548080	8,00
AP191-SN250924	H81	1	●	095	5596152	48,50
AP192-CN2524	H81	1	●	095	5616516	48,50
AP193-TN2716	H81	1	●	095	5616858	13,67
AP196-SN250932	H81	1	●	095	5887092	48,50
AP197		1	●	095	8261791	9,79
AP198		1	●	095	8261792	15,09
AP199		1	●	095	8261793	9,79
AP2261705-UNC6	TIN	1	●	TH7	5934579	59,10
AP2261705-UNC8	TIN	1	●	TH7	5934680	58,40
AP301-CN12	H81	1	●	095	5041478	10,37
AP302-CN16	H81	1	●	095	5041713	18,57
AP303-CN19	H81	1	●	095	5041514	28,30
AP304-DN15	H81	1	●	095	5041490	13,23
AP304-DN1504	H81	1	●	095	5102612	13,23
AP305-DN11	H81	1	●	095	5041480	7,51
AP306-WN06	H81	1	●	095	5041506	7,29
AP307-WN08	H81	1	●	095	5041474	13,67
AP308-SN12	H81	1	●	095	5041486	10,37
AP309-SN15	H81	1	●	095	5041512	18,57
AP310-SN19	H81	1	●	095	5041800	28,30
AP311-WN10	H81	1	●	095	5041161	13,67
AP312-VN16	H81	1	●	095	5042262	11,42
AP313-CC0908	H81	1	●	095	5194535	10,37
AP314-CC1212	H81	1	●	095	5194536	10,37
AP315-DC1108	H81	1	●	095	5194537	7,51
AP316-VB1608	H81	1	●	095	5194538	11,42
AP317-TC1612	H81	1	●	095	5194539	10,37
AP318-WC0608	H81	1	●	095	5194540	15,63
AP319-SC1212	H81	1	●	095	5194541	10,37
AP320-WC0812	H81	1	●	095	5194542	15,63
AP321-TN16	H81	1	●	095	5198337	10,37
AP322-TN22	H81	1	●	095	5198338	12,40
AP323-TN27	H81	1	●	095	5205042	13,67
AP324-RC10T3	H81	1	●	095	5288491	8,00
AP325-RC1204	H81	1	●	095	5334354	8,00
AP326-RC1606	H81	1	●	095	5334356	14,75
AP327-RC2006	H81	1	●	095	5334357	20,41
AP328-SC0908	H81	1	●	095	5334358	10,37
AP329-DC1112	H81	1	●	095	5334359	7,51
AP330-VB1612	H81	1	●	095	5334390	11,42
AP331-WN08	H81	1	●	095	5335597	13,67
AP351-SN25	H81	1	●	095	5111843	48,50
AP351-SN2509	H81	1	●	095	5959843	48,50
AP354-CN12	H81	1	●	095	5111845	10,37
AP355-SN12	H81	1	●	095	5111846	10,37

Bezeichnung / Designation	Sorte / Grade	VE / US		Disc. Gr.	Article No.	EURO Stück / piece
AP356-TN16	H81	1	●	095	5111847	10,37
AP357-DN1508	H81	1	●	095	5111848	13,23
AP357-DN1516	H81	1	●	095	5381122	13,23
AP364-CC1208	H81	1	●	095	7807025	12,92
AP401-RC1003	H81	1	●	095	5837349	8,00
AP402-RC1204	H81	1	●	095	5837603	8,00
AP403-RC1605	H81	1	●	095	5878134	14,75
AP403-RC1606	H81	1	●	095	5837605	14,75
AP404-RC2006	H81	1	●	095	5837608	20,41
AP405-RC2507	H81	1	●	095	5837609	38,00
AP406-RC3209	H81	1	●	095	5837651	54,30
AP407-RC10T3	H81	1	●	095	5837652	8,00
AP408-CN0908	H81	1	●	095	6138555	10,37
AP409-SN0908	H81	1	●	095	6138556	10,37
AP411-CN1207	H81	1	●	095	6258614	10,37
AP412-DN1507	H81	1	●	095	6258616	13,23
AP413-SN1207	H81	1	●	095	6258617	10,37
AP414-CN09	H81	1	●	095	6308369	10,37
AP415-SN09	H81	1	●	095	6308500	10,37
AP416-RC0907	H81	1	●	095	6385543	38,00
AP417-RC1207	HSS	1	●	095	6385545	46,50
AP418-RN1207	HSS	1	●	095	6385546	16,67
AP419-RN1507	HSS	1	●	095	6385547	15,63
AP421-RN1204		1	●	095	7894876	18,25
AP800-SN1205	H81	10	●	095	7871971	14,86
AP800-XN0705	H81	10	●	095	6768465	18,57
AP800-XN0906	H81	10	●	095	6943660	22,96
APGW15T316L-A57	WAK15	10	●	009	5015870	22,34
APGW15T316R-A57	WAK15	10	●	009	5015871	22,34
APGW15T320R-A57	WAK15	10	●	009	5015305	22,34
APGW15T325L-A57	WAK15	10	●	009	5015873	22,34
APHT0903PPR-K88	WK10	10	●	009	5004916	15,53
APHT0903PPR-K88	WXN15	10	●	009	5021894	20,58
APHT15T3PDL-K88	WK10	10	●	009	5004742	18,71
APHT15T3PDR-K88	WK10	10	●	009	5004913	18,71
APHT15T3PDR-K88	WXN15	10	●	009	5021967	24,60
APKT0903PPR-F55	WAK15	10	●	009	5015882	17,59
APKT15T3PDL-F55	WAK15	10	●	009	5015883	20,28
APKT15T3PDR-F55	WAK15	10	●	009	5015884	20,28
APKT15T3PDR-F55	WKM	10	●	009	5004915	15,25
APMT0903PPL-D55	WKP35S	10	●	009	8285620*	16,13
APMT0903PPR-D55	WKP35S	10	●	009	8285621*	16,13
APMT0903PPR-D56	WMG40	10	●	009	5004962	12,57
APMT0903PPR-F56	WMG40	10	●	009	5004963	12,57
APMT0903PPR-F56	WSP45G	10	●	009	8285622*	16,94
APMT15T3PDL-D55	WKP35S	10	●	009	8285623*	19,26
APMT15T3PDR-D55	WAK15	10	●	009	5015801	19,26
APMT15T3PDR-D55	WKP35S	10	●	009	8285624*	19,26
APMT15T3PDR-D56	WMG40	10	●	009	5004965	14,97
APMT15T3PDR-F56	WMG40	10	●	009	5004966	14,97
APMT15T3PDR-F56	WSP45G	10	●	009	8285625*	20,23
APMT15T3PDR-G56	WMG40	10	●	009	5004967	14,97
B3212.DF.10,0.Z01.20R		1	●	050	5003340	391,00
B3212.DF.10,2.Z01.20R		1	●	050	5003341	391,00
B3212.DF.10,5.Z01.21R		1	●	050	5003342	391,00
B3212.DF.11,0.Z01.22R		1	●	050	5003343	391,00
B3212.DF.11,5.Z01.23R		1	●	050	5003344	391,00
B3212.DF.11,7.Z01.23R		1	●	050	5003345	391,00
B3212.DF.12,0.Z01.24R		1	●	050	5003346	391,00
B3212.DF.12,5.Z01.25R		1	●	050	5003347	391,00
B3212.DF.13,0.Z01.26R		1	●	050	5003348	391,00
B3212.DF.13,5.Z01.27R		1	●	050	5003349	391,00
B3212.DF.13,7.Z01.27R		1	●	050	5003350	391,00
B3212.DF.14,0.Z01.28R		1	●	050	5003351	391,00
B3212.DF.14,5.Z01.29R		1	●	050	5003352	391,00
B3212.DF.15,0.Z01.30R		1	●	050	5003353	391,00
B3212.DF.15,5.Z01.31R		1	●	050	5003354	391,00
B3212.DF.15,7.Z01.31R		1	●	050	5003355	391,00
B3212.DF.16,0.Z01.32R		1	●	050	5003356	391,00
B3212.DF.16,5.Z01.33R		1	●	050	5003357	411,00

Bezeichnung / Designation	Sorte / Grade	VE / US		Disc. Gr.	Article No.	EURO Stück / piece
B3212.DF.17,0.Z01.34R		1	●	050	5003358	411,00
B3212.DF.17,5.Z01.35R		1	●	050	5003359	411,00
B3212.DF.18,0.Z01.36R		1	●	050	5003360	411,00
B3213.DF.10,0.Z01.30R		1	●	050	5003361	411,00
B3213.DF.10,2.Z01.30R		1	●	050	5003362	411,00
B3213.DF.10,5.Z01.31R		1	●	050	5003363	411,00
B3213.DF.11,0.Z01.33R		1	●	050	5003364	411,00
B3213.DF.11,5.Z01.34R		1	●	050	5003365	411,00
B3213.DF.11,7.Z01.35R		1	●	050	5003366	411,00
B3213.DF.12,0.Z01.36R		1	●	050	5003367	411,00
B3213.DF.12,5.Z01.37R		1	●	050	5003368	411,00
B3213.DF.13,0.Z01.39R		1	●	050	5003369	411,00
B3213.DF.13,5.Z01.40R		1	●	050	5003370	411,00
B3213.DF.13,7.Z01.41R		1	●	050	5003371	411,00
B3213.DF.14,0.Z01.42R		1	●	050	5003372	411,00
B3213.DF.14,5.Z01.43R		1	●	050	5003373	411,00
B3213.DF.15,0.Z01.45R		1	●	050	5003374	411,00
B3213.DF.15,5.Z01.46R		1	●	050	5003375	411,00
B3213.DF.15,7.Z01.47R		1	●	050	5003376	411,00
B3213.DF.16,0.Z01.48R		1	●	050	5003377	411,00
B3213.DF.16,5.Z01.49R		1	●	050	5003378	433,00
B3213.DF.17,0.Z01.51R		1	●	050	5003379	433,00
B3213.DF.17,5.Z01.52R		1	●	050	5003380	433,00
B3213.DF.18,0.Z01.54R		1	●	050	5003381	433,00
B3214.DF.10,0.Z01.40R		1	●	050	5015675	453,00
B3214.DF.10,5.Z01.42R		1	●	050	5015676	453,00
B3214.DF.11,0.Z01.44R		1	●	050	5015677	453,00
B3214.DF.11,5.Z01.46R		1	●	050	5015678	453,00
B3214.DF.12,0.Z01.48R		1	●	050	5015679	453,00
B3214.DF.12,5.Z01.50R		1	●	050	5015680	453,00
B3214.DF.13,0.Z01.52R		1	●	050	5015681	453,00
B3214.DF.13,5.Z01.54R		1	●	050	5015682	453,00
B3214.DF.14,0.Z01.56R		1	●	050	5015683	453,00
B3214.DF.14,5.Z01.58R		1	●	050	5015684	453,00
B3214.DF.15,0.Z01.60R		1	●	050	5015685	453,00
B3214.DF.15,5.Z01.62R		1	●	050	5015686	453,00
B3214.DF.16,0.Z01.64R		1	●	050	5015687	453,00
B3214.DF.16,5.Z01.66R		1	●	050	5015688	476,00
B3214.DF.17,5.Z01.70R		1	●	050	5015690	476,00
B3214.DF.18,0.Z01.72R		1	●	050	5015691	476,00
B3220.C3.033-041.Z2.CC06		1	●	052	6430518	963,00
B3220.C4.041-055.Z2.CC09		1	●	052	6431413	999,00
B3220.C5.055-070.Z2.CC09		1	●	052	6431414	1.061,00
B3220.C6.070-090.Z2.CC12		1	●	052	6431415	1.180,00
B3220.C8.090-110.Z2.CC12		1	●	052	6431417	1.319,00
B3220.C8.110-133.Z2.CC12		1	●	052	6431475	1.369,00
B3220.C8.130-153.Z2.CC12		1	●	052	6431479	1.393,00
B3220.C8.150-220.Z2.CC12		1	●	052	6430672*	2.901,00
B3220.C8.220-290.Z2.CC12		1	●	052	6431311*	3.004,00
B3220.C8.290-360.Z2.CC12		1	●	052	6431312*	3.100,00
B3220.C8.360-430.Z2.CC12		1	●	052	6431313*	3.265,00
B3220.C8.430-500.Z2.CC12		1	●	052	6431314*	3.435,00
B3220.C8.500-570.Z2.CC12		1	●	052	6431315*	3.599,00
B3220.C8.570-640.Z2.CC12		1	●	052	6431316*	3.764,00
B3220.N3.033-041.Z2.CC06		1	●	052	5007812	893,00
B3220.N4.041-055.Z2.CC09		1	●	052	5007813	931,00
B3220.N5.055-070.Z2.CC09		1	●	052	5007814	998,00
B3220.N6.070-090.Z2.CC12		1	●	052	5007815	1.099,00
B3220.N8.090-110.Z2.CC12		1	●	052	5007816	1.235,00
B3220.N8.110-133.Z2.CC12		1	●	052	5007779	1.284,00
B3220.N8.130-153.Z2.CC12		1	●	052	5007780	1.311,00
B3220.N8.150-220.Z2.CC12		1	●	052	5007797*	2.824,00
B3220.N8.220-290.Z2.CC12		1	●	052	5007798*	2.924,00
B3220.N8.290-360.Z2.CC12		1	●	052	5007799*	3.023,00
B3220.N8.360-430.Z2.CC12		1	●	052	5007800*	3.185,00
B3220.N8.430-500.Z2.CC12		1	●	052	5007801*	3.360,00
B3220.N8.500-570.Z2.CC12		1	●	052	5007802*	3.526,00
B3220.N8.570-640.Z2.CC12		1	●	052	5007803*	3.696,00
B3220.T28.33-41.Z2.CC06		1	●	052	5105519	893,00
B3220.T36.41-55.Z2.CC09		1	●	052	5105520	931,00

Bezeichnung / Designation	Sorte / Grade	VE / US		Disc. Gr.	Article No.	EURO Stück / piece
B3220.T45.55-70.Z2.CC09		1	●	052	5105521	998,00
B3220G.C3.033-044.Z2		1	●	052	6265562	597,00
B3220G.C4.041-056.Z2		1	●	052	6430790	603,00
B3220G.C5.055-073.Z2		1	●	052	6430791	620,00
B3220G.C6.070-093.Z2		1	●	052	6430792	695,00
B3220G.C8.090-113.Z2		1	●	052	6265566	783,00
B3220G.C8.110-153.Z2		1	●	052	6430793	830,00
B3220G.N3.033-044.Z2		1	●	052	5007758	542,00
B3220G.N4.041-056.Z2		1	●	052	5007759	549,00
B3220G.N5.055-073.Z2		1	●	052	5007760	564,00
B3220G.N6.070-093.Z2		1	●	052	5007761	632,00
B3220G.N8.090-113.Z2		1	●	052	5007762	712,00
B3220G.N8.110-153.Z2		1	●	052	5007763	755,00
B3220G.T28.33-41.Z2		1	●	052	5100958	542,00
B3220G.T36.41-55.Z2		1	●	052	5100959	549,00
B3220G.T45.55-70.Z2		1	●	052	5100960	564,00
B3221.C3.020-024.Z2.CC06		1	●	052	6429659	886,00
B3221.C3.023-027.Z2.CC06		1	●	052	6429780	886,00
B3221.C3.026-033.Z2.CC06		1	●	052	6430516	924,00
B3221.N2.020-024.Z2.CC06		1	●	052	5095985	823,00
B3221.N2.023-027.Z2.CC06		1	●	052	5095986	823,00
B3221.N2.026-033.Z2.CC06		1	●	052	5095987	854,00
B3221.T18.20-24.Z2.CC06		1	●	052	5105513	823,00
B3221.T18.23-27.Z2.CC06		1	●	052	5105514	823,00
B3221.T22.26-33.Z2.CC06		1	●	052	5105515	854,00
B3221G.C3.020-027.Z2		1	●	052	6390236	557,00
B3221G.C3.026-035.Z2		1	●	052	6390237	573,00
B3221G.N2.020-027.Z2		1	●	052	5094983	506,00
B3221G.N2.026-035.Z2		1	●	052	5094984	521,00
B3221G.T18.20-27.Z2		1	●	052	5100956	506,00
B3221G.T22.26-33.Z2		1	●	052	5100957	521,00
B3223G.C8.150-640		1	●	052	6306886	954,00
B3223G.N8.150-640		1	●	052	5007764	862,00
B3224.C8.150-220.Z2.CC12		1	●	052	6431386*	2.896,00
B3224.C8.220-290.Z2.CC12		1	●	052	6431387*	2.998,00
B3224.C8.290-360.Z2.CC12		1	●	052	6431388*	3.095,00
B3224.C8.360-430.Z2.CC12		1	●	052	6431389*	3.260,00
B3224.C8.430-500.Z2.CC12		1	●	052	6431410*	3.429,00
B3224.C8.500-570.Z2.CC12		1	●	052	6431411*	3.594,00
B3224.C8.570-640.Z2.CC12		1	●	052	6431412*	3.759,00
B3224.N8.150-220.Z2.CC12		1	●	052	5232809*	2.824,00
B3224.N8.220-290.Z2.CC12		1	●	052	5232830*	2.924,00
B3224.N8.290-360.Z2.CC12		1	●	052	5232831*	3.023,00
B3224.N8.360-430.Z2.CC12		1	●	052	5232832*	3.185,00
B3224.N8.430-500.Z2.CC12		1	●	052	5232833*	3.360,00
B3224.N8.500-570.Z2.CC12		1	●	052	5232834*	3.526,00
B3224.N8.570-640.Z2.CC12		1	●	052	5232835*	3.696,00
B3224G.C8.150-640		1	●	052	6428296	948,00
B3224G.N8.150-640		1	●	052	5225600	862,00
B3230.C3.020-026.Z1.CP05		1	●	052	6478551*	1.194,00
B3230.C3.020-026.Z1.TC06		1	●	052	7649191*	1.194,00
B3230.C3.020-038.Z1.CP05		1	●	052	6440706*	1.457,00
B3230.C3.020-038.Z1.TC06		1	●	052	7649192*	1.457,00
B3230.C3.026-032.Z1.CP05		1	●	052	6478618*	1.244,00
B3230.C3.026-032.Z1.TC06		1	●	052	7649193*	1.244,00
B3230.C3.026-033.Z1.CP05		1	●	052	6478640*	1.239,00
B3230.C3.026-033.Z1.TC06		1	●	052	7649194*	1.239,00
B3230.C3.026-047.Z1.CP05		1	●	052	6440751*	1.521,00
B3230.C3.026-047.Z1.TC06		1	●	052	7649195*	1.511,00
B3230.C3.032-038.Z1.CP05		1	●	052	6478619*	1.283,00
B3230.C3.032-038.Z1.TC06		1	●	052	7649196*	1.283,00
B3230.C3.033-040.Z1.CP05		1	●	052	6478642*	1.291,00
B3230.C3.033-040.Z1.TC06		1	●	052	7649197*	1.291,00
B3230.C3.033-041.Z1.CP05		1	●	052	6478644*	1.272,00
B3230.C3.033-041.Z1.TC06		1	●	052	7649198*	1.272,00
B3230.C3.033-057.Z1.CP05		1	●	052	6440755*	1.571,00
B3230.C3.033-057.Z1.TC06		1	●	052	7649199*	1.571,00
B3230.C3.040-047.Z1.CP05		1	●	052	6478643*	1.331,00
B3230.C3.040-047.Z1.TC06		1	●	052	7649210*	1.331,00
B3230.C3.041-049.Z1.CP05		1	●	052	6478645*	1.332,00

Bezeichnung / Designation	Sorte / Grade	VE / US		Disc. Gr.	Article No.	EURO Stück / piece
B3230.C3.041-049.Z1.TC06		1	●	052	7649211*	1.332,00
B3230.C3.049-057.Z1.CP05		1	●	052	6478648*	1.375,00
B3230.C3.049-057.Z1.TC06		1	●	052	7649212*	1.375,00
B3230.C4.041-055.Z1.CC06		1	●	052	6478649*	1.300,00
B3230.C4.041-055.Z1.TC06		1	●	052	7649213*	1.300,00
B3230.C4.041-083.Z1.CC06		1	●	052	6440757*	1.625,00
B3230.C4.041-083.Z1.TC06		1	●	052	7649214*	1.625,00
B3230.C4.055-069.Z1.CC06		1	●	052	6478650*	1.362,00
B3230.C4.055-069.Z1.TC06		1	●	052	7649215*	1.362,00
B3230.C4.069-083.Z1.CC06		1	●	052	6478651*	1.409,00
B3230.C4.069-083.Z1.TC06		1	●	052	7649216*	1.409,00
B3230.C5.055-070.Z1.CC06		1	●	052	6478652*	1.334,00
B3230.C5.055-070.Z1.TC11		1	●	052	7649217*	1.334,00
B3230.C5.055-100.Z1.CC06		1	●	052	6440758*	1.722,00
B3230.C5.055-100.Z1.TC11		1	●	052	7649218*	1.722,00
B3230.C5.070-085.Z1.CC06		1	●	052	6478653*	1.404,00
B3230.C5.070-085.Z1.TC11		1	●	052	7649219*	1.404,00
B3230.C5.085-100.Z1.CC06		1	●	052	6478656*	1.458,00
B3230.C5.085-100.Z1.TC11		1	●	052	7649220*	1.458,00
B3230.C6.02-03.Z1.WK10		1	●	052	6450200*	1.646,00
B3230.C6.03-06.Z1.WK10		1	●	052	6450209*	1.648,00
B3230.C6.070-090.Z1.CC06		1	●	052	6478657*	1.496,00
B3230.C6.070-090.Z1.TC11		1	●	052	7649221*	1.496,00
B3230.C6.070-120.Z1.CC06		1	●	052	6440780*	1.873,00
B3230.C6.070-120.Z1.TC11		1	●	052	7649222*	1.875,00
B3230.C6.085-105.Z1.CC06		1	●	052	6478658*	1.565,00
B3230.C6.085-105.Z1.TC11		1	●	052	7649223*	1.565,00
B3230.C6.09-12.Z1.TC06.L		1	●	052	7649226*	1.929,00
B3230.C6.09-12.Z1.TC06.S		1	●	052	7649227*	1.745,00
B3230.C6.090-116.Z1.CC06		1	●	052	6478670*	1.672,00
B3230.C6.090-116.Z1.TC11		1	●	052	7649224*	1.672,00
B3230.C6.090-166.Z1.CC06		1	●	052	6440781*	2.134,00
B3230.C6.090-166.Z1.TC11		1	●	052	7649225*	2.134,00
B3230.C6.100-120.Z1.CC06		1	●	052	6478659*	1.619,00
B3230.C6.100-120.Z1.TC11		1	●	052	7649228*	1.619,00
B3230.C6.110-153.Z1.CC06		1	●	052	6478677*	1.755,00
B3230.C6.110-153.Z1.TC11		1	●	052	7649229*	1.755,00
B3230.C6.110-203.Z1.CC06		1	●	052	6440783*	2.212,00
B3230.C6.110-203.Z1.TC11		1	●	052	7649230*	2.212,00
B3230.C6.115-141.Z1.CC06		1	●	052	6478671*	1.715,00
B3230.C6.115-141.Z1.TC11		1	●	052	7649231*	1.715,00
B3230.C6.12-14.Z1.TC06.L		1	●	052	7649232*	1.955,00
B3230.C6.12-14.Z1.TC06.S		1	●	052	7649233*	1.745,00
B3230.C6.135-178.Z1.CC06		1	●	052	6478679*	1.798,00
B3230.C6.135-178.Z1.TC11		1	●	052	7649234*	1.798,00
B3230.C6.14-16.Z1.TC06.L		1	●	052	7649236*	1.995,00
B3230.C6.14-16.Z1.TC06.S		1	●	052	7649237*	1.729,00
B3230.C6.140-166.Z1.CC06		1	●	052	6478673*	1.780,00
B3230.C6.140-166.Z1.TC11		1	●	052	7649235*	1.780,00
B3230.C6.16-20.Z1.TC06.L		1	●	052	7649239*	2.030,00
B3230.C6.16-20.Z1.TC06.S		1	●	052	7649240*	1.732,00
B3230.C6.160-203.Z1.CC06		1	●	052	6478680*	1.863,00
B3230.C6.160-203.Z1.TC11		1	●	052	7649238*	1.863,00
B3230.C6.18-22.Z1.TC11.L		1	●	052	7649241*	2.084,00
B3230.C6.18-22.Z1.TC11.M		1	●	052	7649242*	1.983,00
B3230.C6.18-22.Z1.TC11.S		1	●	052	7649243*	1.633,00
B3230.C6.22-25.Z1.TC11.L		1	●	052	7649244*	2.084,00
B3230.C6.22-25.Z1.TC11.M		1	●	052	7649245*	1.983,00
B3230.C6.22-25.Z1.TC11.S		1	●	052	7649246*	1.633,00
B3230.C6.25-28.Z1.TC11.L		1	●	052	7649247*	2.084,00
B3230.C6.25-28.Z1.TC11.M		1	●	052	7649248*	1.983,00
B3230.C6.25-28.Z1.TC11.S		1	●	052	7649249*	1.633,00
B3230.C6.28-32.Z1.TC11.L		1	●	052	7649250*	2.091,00
B3230.C6.28-32.Z1.TC11.M		1	●	052	7649251*	1.991,00
B3230.C6.28-32.Z1.TC11.S		1	●	052	7649252*	1.640,00
B3230.C6.32-36.Z1.TC11.L		1	●	052	7649253*	2.095,00
B3230.C6.32-36.Z1.TC11.M		1	●	052	7649254*	1.994,00
B3230.C6.32-36.Z1.TC11.S		1	●	052	7649255*	1.644,00
B3230.C6.36-40.Z1.TC11.L		1	●	052	7649256*	2.101,00
B3230.C6.36-40.Z1.TC11.M		1	●	052	7649257*	2.000,00

Bezeichnung / Designation	Sorte / Grade	VE / US		Disc. Gr.	Article No.	EURO Stück / piece
B3230.C6.36-40.Z1.TC11.S		1	●	052	7649258*	1.650,00
B3230.C6.40-45.Z1.TC11.L		1	●	052	7649259*	2.112,00
B3230.C6.40-45.Z1.TC11.M		1	●	052	7649260*	2.011,00
B3230.C6.40-45.Z1.TC11.S		1	●	052	7649261*	1.661,00
B3230.C8.090-116.Z1.CC06		1	●	052	6478674*	1.748,00
B3230.C8.090-116.Z1.TC11		1	●	052	7649262*	1.748,00
B3230.C8.090-166.Z1.CC06		1	●	052	6440782*	2.206,00
B3230.C8.090-166.Z1.TC11		1	●	052	7649263*	2.206,00
B3230.C8.110-153.Z1.CC06		1	●	052	6478681*	1.835,00
B3230.C8.110-153.Z1.TC11		1	●	052	7649264*	1.835,00
B3230.C8.110-203.Z1.CC06		1	●	052	6440785*	2.289,00
B3230.C8.110-203.Z1.TC11		1	●	052	7649265*	2.289,00
B3230.C8.115-141.Z1.CC06		1	●	052	6478675*	1.791,00
B3230.C8.115-141.Z1.TC11		1	●	052	7649266*	1.791,00
B3230.C8.135-178.Z1.CC06		1	●	052	6478682*	1.878,00
B3230.C8.135-178.Z1.TC11		1	●	052	7649267*	1.878,00
B3230.C8.140-166.Z1.CC06		1	●	052	6478676*	1.856,00
B3230.C8.140-166.Z1.TC11		1	●	052	7649268*	1.856,00
B3230.C8.150-220.Z1.CC06		1	●	052	6498879*	3.408,00
B3230.C8.150-220.Z1.TC11		1	●	052	7649269*	3.408,00
B3230.C8.160-203.Z1.CC06		1	●	052	6478683*	1.943,00
B3230.C8.160-203.Z1.TC11		1	●	052	7649270*	1.943,00
B3230.C8.220-290.Z1.CC06		1	●	052	6498905*	3.490,00
B3230.C8.220-290.Z1.TC11		1	●	052	7649271*	3.490,00
B3230.C8.290-360.Z1.CC06		1	●	052	6498907*	3.568,00
B3230.C8.290-360.Z1.TC11		1	●	052	7649272*	3.568,00
B3230.C8.360-430.Z1.CC06		1	●	052	6498909*	3.699,00
B3230.C8.360-430.Z1.TC11		1	●	052	7649273*	3.699,00
B3230.C8.430-500.Z1.CC06		1	●	052	6498913*	3.835,00
B3230.C8.430-500.Z1.TC11		1	●	052	7649274*	3.835,00
B3230.C8.500-570.Z1.CC06		1	●	052	6498915*	3.967,00
B3230.C8.500-570.Z1.TC11		1	●	052	7649275*	3.967,00
B3230.C8.570-640.Z1.CC06		1	●	052	6498917*	4.098,00
B3230.C8.570-640.Z1.TC11		1	●	052	7649276*	4.098,00
B3230.N2.020-026.Z1.CP05		1	●	052	5007716*	1.235,00
B3230.N2.020-026.Z1.TC06		1	●	052	7649277*	1.235,00
B3230.N2.026-033.Z1.CP05		1	●	052	5007717*	1.273,00
B3230.N2.026-033.Z1.TC06		1	●	052	7649278*	1.273,00
B3230.N3.033-041.Z1.CP05		1	●	052	5007718*	1.309,00
B3230.N3.033-041.Z1.TC06		1	●	052	7649279*	1.309,00
B3230.N4.041-055.Z1.CC06		1	●	052	5007719*	1.352,00
B3230.N4.041-055.Z1.TC06		1	●	052	7649280*	1.352,00
B3230.N5.055-070.Z1.CC06		1	●	052	5007720*	1.414,00
B3230.N5.055-070.Z1.TC11		1	●	052	7649281*	1.414,00
B3230.N6.02-03.Z1.WK10		1	●	052	5007669*	1.755,00
B3230.N6.03-06.Z1.WK10		1	●	052	5007670*	1.758,00
B3230.N6.06-07.Z1.WC02		1	●	052	5007671*	1.976,00
B3230.N6.07-09.Z1.WC02		1	●	052	5007672*	2.049,00
B3230.N6.070-090.Z1.CC06		1	●	052	5007721*	1.564,00
B3230.N6.070-090.Z1.TC11		1	●	052	7649282*	1.564,00
B3230.N6.09-12.Z1.TC06.L		1	●	052	7649283*	2.073,00
B3230.N6.09-12.Z1.TC06.S		1	●	052	7649284*	1.862,00
B3230.N6.12-14.Z1.TC06.L		1	●	052	7649285*	2.105,00
B3230.N6.12-14.Z1.TC06.S		1	●	052	7649286*	1.862,00
B3230.N6.14-16.Z1.TC06.L		1	●	052	7649287*	2.105,00
B3230.N6.14-16.Z1.TC06.S		1	●	052	7649288*	1.862,00
B3230.N6.16-20.Z1.TC06.L		1	●	052	7649289*	2.105,00
B3230.N6.16-20.Z1.TC06.S		1	●	052	7649290*	1.862,00
B3230.N6.18-22.Z1.TC11.L		1	●	052	7649291*	2.257,00
B3230.N6.18-22.Z1.TC11.M		1	●	052	7649292*	2.139,00
B3230.N6.18-22.Z1.TC11.S		1	●	052	7649293*	1.731,00
B3230.N6.22-25.Z1.TC11.L		1	●	052	7649294*	2.257,00
B3230.N6.22-25.Z1.TC11.M		1	●	052	7649295*	2.139,00
B3230.N6.22-25.Z1.TC11.S		1	●	052	7649296*	1.731,00
B3230.N6.25-28.Z1.TC11.L		1	●	052	7649297*	2.257,00
B3230.N6.25-28.Z1.TC11.M		1	●	052	7649298*	2.139,00
B3230.N6.25-28.Z1.TC11.S		1	●	052	7649299*	1.731,00
B3230.N6.28-32.Z1.TC11.L		1	●	052	7649300*	2.262,00
B3230.N6.28-32.Z1.TC11.M		1	●	052	7649301*	2.146,00
B3230.N6.28-32.Z1.TC11.S		1	●	052	7649302*	1.736,00

Bezeichnung / Designation	Sorte / Grade	VE / US		Disc. Gr.	Article No.	EURO Stück / piece
B3230.N6.32-36.Z1.TC11.L		1	●	052	7649303[1]	2.267,00
B3230.N6.32-36.Z1.TC11.M		1	●	052	7649304[1]	2.153,00
B3230.N6.32-36.Z1.TC11.S		1	●	052	7649305[1]	1.744,00
B3230.N6.36-40.Z1.TC11.L		1	●	052	7649306[1]	2.274,00
B3230.N6.36-40.Z1.TC11.M		1	●	052	7649307[1]	2.161,00
B3230.N6.36-40.Z1.TC11.S		1	●	052	7649308[1]	1.752,00
B3230.N6.40-45.Z1.TC11.L		1	●	052	7649309[1]	2.284,00
B3230.N6.40-45.Z1.TC11.M		1	●	052	7649310[1]	2.171,00
B3230.N6.40-45.Z1.TC11.S		1	●	052	7649311[1]	1.765,00
B3230.N8.090-110.Z1.CC06		1	●	052	5007722[1]	1.756,00
B3230.N8.090-110.Z1.TC11		1	●	052	7649312[1]	1.756,00
B3230.N8.110-153.Z1.CC06		1	●	052	5007723[1]	1.854,00
B3230.N8.110-153.Z1.TC11		1	●	052	7649313[1]	1.854,00
B3230.N8.150-220.Z1.CC06		1	●	052	5007655[1]	3.167,00
B3230.N8.150-220.Z1.TC11		1	●	052	7649314[1]	3.167,00
B3230.N8.220-290.Z1.CC06		1	●	052	5007656[1]	3.682,00
B3230.N8.220-290.Z1.TC11		1	●	052	7649315[1]	3.682,00
B3230.N8.290-360.Z1.CC06		1	●	052	5007657[1]	3.774,00
B3230.N8.290-360.Z1.TC11		1	●	052	7649316[1]	3.774,00
B3230.N8.360-430.Z1.CC06		1	●	052	5007658[1]	3.925,00
B3230.N8.360-430.Z1.TC11		1	●	052	7649317[1]	3.925,00
B3230.N8.430-500.Z1.CC06		1	●	052	5007659[1]	4.078,00
B3230.N8.430-500.Z1.TC11		1	●	052	7649318[1]	4.078,00
B3230.N8.500-570.Z1.CC06		1	●	052	5007660[1]	4.231,00
B3230.N8.500-570.Z1.TC11		1	●	052	7649319[1]	4.231,00
B3230.N8.570-640.Z1.CC06		1	●	052	5007661[1]	4.388,00
B3230.N8.570-640.Z1.TC11		1	●	052	7649320[1]	4.388,00
B3230.T14.15-18.Z1.WC02		1	●	052	6481547[1]	1.249,00
B3230.T14.15-21.Z1.WC02		1	●	052	6440787[1]	1.295,00
B3230.T14.18-21.Z1.WC02		1	●	052	6481548[1]	1.249,00
B3230.T18.20-26.Z1.CP05		1	●	052	5100098[1]	1.286,00
B3230.T18.20-26.Z1.TC06		1	●	052	7649321[1]	1.286,00
B3230.T22.26-33.Z1.CP05		1	●	052	5100100[1]	1.326,00
B3230.T22.26-33.Z1.TC06		1	●	052	7649322[1]	1.326,00
B3230G.C3.20-38.Z1		1	●	052	6306887[1]	1.336,00
B3230G.C3.26-47.Z1		1	●	052	6306888[1]	1.385,00
B3230G.C3.33-57.Z1		1	●	052	6306889[1]	1.419,00
B3230G.C4.41-83.Z1		1	●	052	6306903[1]	1.455,00
B3230G.C5.55-100.Z1		1	●	052	6306905[1]	1.469,00
B3230G.C6.02-45.Z1		1	●	052	6306866[1]	1.801,00
B3230G.C6.070-120.Z1		1	●	052	6306907[1]	1.669,00
B3230G.C6.090-166.Z1		1	●	052	6306908[1]	1.803,00
B3230G.C6.110-203.Z1		1	●	052	6306909[1]	1.906,00
B3230G.C8.090-166.Z1		1	●	052	6306913[1]	1.898,00
B3230G.C8.110-203.Z1		1	●	052	6306914[1]	2.007,00
B3230G.N2.020-026.Z1		1	●	052	5007700[1]	1.209,00
B3230G.N2.026-033.Z1		1	●	052	5007701[1]	1.244,00
B3230G.N3.033-041.Z1		1	●	052	5007702[1]	1.280,00
B3230G.N4.041-055.Z1		1	●	052	5007703[1]	1.311,00
B3230G.N5.055-070.Z1		1	●	052	5007704[1]	1.345,00
B3230G.N6.002-045.Z1		1	●	052	5007622[1]	1.652,00
B3230G.N6.070-090.Z1		1	●	052	5007705[1]	1.503,00
B3230G.N8.090-110.Z1		1	●	052	5007706[1]	1.709,00
B3230G.N8.110-153.Z1		1	●	052	5007707[1]	1.808,00
B3230G.T14.15-21.Z1		1	●	052	6306883[1]	1.173,00
B3230G.T18.20-26.Z1		1	●	052	5100077[1]	1.209,00
B3230G.T22.26-33.Z1		1	●	052	5100079[1]	1.244,00
B3234.C8.150-220.Z1.CC06		1	●	052	6499009[1]	3.337,00
B3234.C8.150-220.Z1.TC11		1	●	052	7649443[1]	3.337,00
B3234.C8.220-290.Z1.CC06		1	●	052	6499022[1]	3.420,00
B3234.C8.220-290.Z1.TC11		1	●	052	7649444[1]	3.420,00
B3234.C8.290-360.Z1.CC06		1	●	052	6499024[1]	3.497,00
B3234.C8.290-360.Z1.TC11		1	●	052	7649445[1]	3.497,00
B3234.C8.360-430.Z1.CC06		1	●	052	6499032[1]	3.629,00
B3234.C8.360-430.Z1.TC11		1	●	052	7649446[1]	3.629,00
B3234.C8.430-500.Z1.CC06		1	●	052	6499035[1]	3.764,00
B3234.C8.430-500.Z1.TC11		1	●	052	7649447[1]	3.764,00
B3234.C8.500-570.Z1.CC06		1	●	052	6499037[1]	3.896,00
B3234.C8.500-570.Z1.TC11		1	●	052	7649448[1]	3.896,00
B3234.C8.570-640.Z1.CC06		1	●	052	6499039[1]	4.028,00

Bezeichnung / Designation	Sorte / Grade	VE / US		Disc. Gr.	Article No.	EURO Stück / piece
B3234.C8.570-640.Z1.TC11		1	●	052	7649449[1]	4.028,00
B3234.N8.150-220.Z1.CC06		1	●	052	5233029[1]	3.167,00
B3234.N8.150-220.Z1.TC11		1	●	052	7649450[1]	3.167,00
B3234.N8.220-290.Z1.CC06		1	●	052	5233052[1]	3.682,00
B3234.N8.220-290.Z1.TC11		1	●	052	7649451[1]	3.682,00
B3234.N8.290-360.Z1.CC06		1	●	052	5233054[1]	3.774,00
B3234.N8.290-360.Z1.TC11		1	●	052	7649452[1]	3.774,00
B3234.N8.360-430.Z1.CC06		1	●	052	5233056[1]	3.925,00
B3234.N8.360-430.Z1.TC11		1	●	052	7649453[1]	3.925,00
B3234.N8.430-500.Z1.CC06		1	●	052	5233058[1]	4.078,00
B3234.N8.430-500.Z1.TC11		1	●	052	7649454[1]	4.078,00
B3234.N8.500-570.Z1.CC06		1	●	052	5233060[1]	4.231,00
B3234.N8.500-570.Z1.TC11		1	●	052	7649455[1]	4.231,00
B3234.N8.570-640.Z1.CC06		1	●	052	5233062[1]	4.388,00
B3234.N8.570-640.Z1.TC11		1	●	052	7649456[1]	4.388,00
B4030.C3.033-041.Z1.CP05		1	■	052	6498216[2]	1.488,00
B4030.C3.033-041.Z1.TC06		1	■	052	7649471[2]	1.488,00
B4030.C4.041-055.Z1.CP05		1	■	052	6498243[2]	1.528,00
B4030.C4.041-055.Z1.TC06		1	■	052	7649472[2]	1.528,00
B4030.C5.055-070.Z1.CC06		1	■	052	6498265[2]	1.541,00
B4030.C5.055-070.Z1.TC06		1	■	052	7649473[2]	1.541,00
B4030.C6.02-03.Z1.WK10		1	■	052	6474731[2]	1.789,00
B4030.C6.03-06.Z1.WK10		1	■	052	6474736[2]	1.791,00
B4030.C6.06-07.Z1.WC02		1	■	052	6474738[2]	1.994,00
B4030.C6.07-09.Z1.WC02		1	■	052	6474780[2]	2.055,00
B4030.C6.070-090.Z1.CC06		1	■	052	6498283[2]	1.732,00
B4030.C6.070-090.Z1.TC06		1	■	052	7649474[2]	1.732,00
B4030.C6.09-12.Z1.TC06.L		1	■	052	7649476[2]	1.889,00
B4030.C6.09-12.Z1.TC06.S		1	■	052	7649477[2]	1.861,00
B4030.C6.090-110.Z1.CC06		1	■	052	6498305[2]	1.861,00
B4030.C6.090-110.Z1.TC06		1	■	052	7649475[2]	1.745,00
B4030.C6.110-153.Z1.CC06		1	■	052	6498308[2]	1.960,00
B4030.C6.110-153.Z1.TC06		1	■	052	7649478[2]	1.960,00
B4030.C6.12-14.Z1.TC06.L		1	■	052	7649479[2]	2.099,00
B4030.C6.12-14.Z1.TC06.S		1	■	052	7649480[2]	1.889,00
B4030.C6.14-16.Z1.TC06.L		1	■	052	7649481[2]	2.138,00
B4030.C6.14-16.Z1.TC06.S		1	■	052	7649482[2]	1.873,00
B4030.C6.16-20.Z1.TC06.L		1	■	052	7649483[2]	2.174,00
B4030.C6.16-20.Z1.TC06.S		1	■	052	7649484[2]	1.876,00
B4030.C6.18-22.Z1.TC11.L		1	■	052	7649485[2]	2.228,00
B4030.C6.18-22.Z1.TC11.M		1	■	052	7649486[2]	2.127,00
B4030.C6.18-22.Z1.TC11.S		1	■	052	7649487[2]	1.777,00
B4030.C6.22-25.Z1.TC11.L		1	■	052	7649488[2]	2.228,00
B4030.C6.22-25.Z1.TC11.M		1	■	052	7649489[2]	2.127,00
B4030.C6.22-25.Z1.TC11.S		1	■	052	7649490[2]	1.777,00
B4030.C6.25-28.Z1.TC11.L		1	■	052	7649491[2]	2.228,00
B4030.C6.25-28.Z1.TC11.M		1	■	052	7649492[2]	2.127,00
B4030.C6.25-28.Z1.TC11.S		1	■	052	7649493[2]	1.777,00
B4030.C6.28-32.Z1.TC11.L		1	■	052	7649494[2]	2.235,00
B4030.C6.28-32.Z1.TC11.M		1	■	052	7649495[2]	2.134,00
B4030.C6.28-32.Z1.TC11.S		1	■	052	7649496[2]	1.784,00
B4030.C6.32-36.Z1.TC11.L		1	■	052	7649497[2]	2.238,00
B4030.C6.32-36.Z1.TC11.M		1	■	052	7649498[2]	2.138,00
B4030.C6.32-36.Z1.TC11.S		1	■	052	7649499[2]	1.787,00
B4030.C6.36-40.Z1.TC11.L		1	■	052	7649500[2]	2.244,00
B4030.C6.36-40.Z1.TC11.M		1	■	052	7649501[2]	2.144,00
B4030.C6.36-40.Z1.TC11.S		1	■	052	7649502[2]	1.794,00
B4030.C6.40-45.Z1.TC11.L		1	■	052	7649503[2]	2.255,00
B4030.C6.40-45.Z1.TC11.M		1	■	052	7649504[2]	2.155,00
B4030.C6.40-45.Z1.TC11.S		1	■	052	7649505[2]	1.804,00
B4030.C8.090-110.Z1.CC06		1	■	052	6498306[2]	1.952,00
B4030.C8.090-110.Z1.TC06		1	■	052	7649506[2]	1.952,00
B4030.C8.110-153.Z1.CC06		1	■	052	6498311[2]	2.056,00
B4030.C8.110-153.Z1.TC06		1	■	052	7649507[2]	2.056,00
B4030.N6.02-03.Z1.WK10		1	■	052	5112958[2]	1.929,00
B4030.N6.03-06.Z1.WK10		1	■	052	5112971[2]	1.932,00
B4030.N6.06-07.Z1.WC02		1	■	052	5112972[2]	2.174,00
B4030.N6.07-09.Z1.WC02		1	■	052	5112974[2]	2.254,00
B4030.N6.070-090.Z1.CC06		1	■	052	5100113[2]	1.720,00
B4030.N6.070-090.Z1.TC06		1	■	052	7649508[2]	1.720,00

Bezeichnung / Designation	Sorte / Grade	VE / US		Disc. Gr.	Article No.	EURO Stück / piece
B4030.N6.09-12.Z1.TC06.L		1	■	052	7649509*	2.280,00
B4030.N6.09-12.Z1.TC06.S		1	■	052	7649510*	2.050,00
B4030.N6.12-14.Z1.TC06.L		1	■	052	7649511*	2.316,00
B4030.N6.12-14.Z1.TC06.S		1	■	052	7649512*	2.050,00
B4030.N6.14-16.Z1.TC06.L		1	■	052	7649513*	2.316,00
B4030.N6.14-16.Z1.TC06.S		1	■	052	7649514*	2.050,00
B4030.N6.16-20.Z1.TC06.L		1	■	052	7649515*	2.316,00
B4030.N6.16-20.Z1.TC06.S		1	■	052	7649516*	2.050,00
B4030.N6.18-22.Z1.TC11.L		1	■	052	7649517*	1.906,00
B4030.N6.18-22.Z1.TC11.M		1	■	052	7649518*	1.906,00
B4030.N6.18-22.Z1.TC11.S		1	■	052	7649519*	1.906,00
B4030.N6.22-25.Z1.TC11.L		1	■	052	7649520*	1.926,00
B4030.N6.22-25.Z1.TC11.M		1	■	052	7649521*	1.919,00
B4030.N6.22-25.Z1.TC11.S		1	■	052	7649522*	1.910,00
B4030.N6.25-28.Z1.TC11.L		1	■	052	7649523*	2.350,00
B4030.N6.25-28.Z1.TC11.M		1	■	052	7649524*	2.350,00
B4030.N6.25-28.Z1.TC11.S		1	■	052	7649525*	1.942,00
B4030.N6.28-32.Z1.TC11.L		1	■	052	7649526*	2.370,00
B4030.N6.28-32.Z1.TC11.M		1	■	052	7649527*	2.361,00
B4030.N6.28-32.Z1.TC11.S		1	■	052	7649528*	2.350,00
B4030.N6.32-36.Z1.TC11.L		1	■	052	7649529*	2.484,00
B4030.N6.32-36.Z1.TC11.M		1	■	052	7649530*	2.389,00
B4030.N6.32-36.Z1.TC11.S		1	■	052	7649531*	2.379,00
B4030.N6.36-40.Z1.TC11.L		1	■	052	7649532*	2.489,00
B4030.N6.36-40.Z1.TC11.M		1	■	052	7649533*	2.484,00
B4030.N6.36-40.Z1.TC11.S		1	■	052	7649534*	2.484,00
B4030.N6.40-45.Z1.TC11.L		1	■	052	7649535*	2.514,00
B4030.N6.40-45.Z1.TC11.M		1	■	052	7649536*	2.501,00
B4030.N6.40-45.Z1.TC11.S		1	■	052	7649537*	2.495,00
B4030.N8.090-110.Z1.CC06		1	■	052	5100114*	1.932,00
B4030.N8.090-110.Z1.TC06		1	■	052	7649538*	1.932,00
B4030.N8.110-153.Z1.CC06		1	■	052	5100115*	2.038,00
B4030.N8.110-153.Z1.TC06		1	■	052	7649539*	2.038,00
B4030.T28.33-41.Z1.CP05		1	■	052	5099462*	1.502,00
B4030.T28.33-41.Z1.TC06		1	■	052	7649540*	1.502,00
B4030.T36.41-55.Z1.CP05		1	■	052	5100104*	1.549,00
B4030.T36.41-55.Z1.TC06		1	■	052	7649541*	1.549,00
B4030.T45.02-03.Z1.WK10		1	■	052	5112984*	2.009,00
B4030.T45.03-06.Z1.WK10		1	■	052	5112985*	2.012,00
B4030.T45.06-07.Z1.WC02		1	■	052	5112986*	2.264,00
B4030.T45.07-09.Z1.WC02		1	■	052	5112987*	2.347,00
B4030.T45.09-12.Z1.TC06L		1	■	052	7649543*	2.374,00
B4030.T45.09-12.Z1TC06.S		1	■	052	7649542*	2.135,00
B4030.T45.12-14.Z1TC06.L		1	■	052	7649544*	2.412,00
B4030.T45.12-14.Z1TC06.S		1	■	052	7649545*	2.135,00
B4030.T45.14-16.Z1TC06.L		1	■	052	7649546*	2.135,00
B4030.T45.14-16.Z1TC06.S		1	■	052	7649547*	2.412,00
B4030.T45.16-20.Z1TC06.L		1	■	052	7649548*	2.135,00
B4030.T45.16-20.Z1TC06.S		1	■	052	7649549*	2.412,00
B4030.T45.55-70.Z1.CC06		1	■	052	5100105*	1.620,00
B4030.T45.55-70.Z1.TC06		1	■	052	7649550*	1.620,00
B4030G.C3.33-41.Z1		1	■	052	6307097*	1.561,00
B4030G.C4.41-55.Z1		1	■	052	6307122*	1.600,00
B4030G.C5.55-70.Z1		1	■	052	6307125*	1.616,00
B4030G.C6.02-45.Z1		1	■	052	6306880*	1.981,00
B4030G.C6.070-090.Z1		1	■	052	6307132*	1.836,00
B4030G.C6.090-110.Z1		1	■	052	6307133*	1.983,00
B4030G.C6.110-153.Z1		1	■	052	6307134*	2.097,00
B4030G.C8.090-110.Z1		1	■	052	6307231*	2.087,00
B4030G.C8.110-153.Z1		1	■	052	6307233*	2.208,00
B4030G.N6.02-45.Z1		1	■	052	5099449*	1.815,00
B4030G.N6.070-090.Z1		1	■	052	5100059*	1.653,00
B4030G.N8.090-110.Z1		1	■	052	5100070*	1.880,00
B4030G.N8.110-153.Z1		1	■	052	5100071*	1.989,00
B4030G.T28.33-41.Z1		1	■	052	5099450*	1.408,00
B4030G.T36.41-55.Z1		1	■	052	5099453*	1.442,00
B4030G.T45.02-20.Z1		1	■	052	5099448*	1.815,00
B4030G.T45.55-70.Z1		1	■	052	5099454*	1.480,00
B4035.C6.03-10.Z1.P15		1	●	052	8095726	4.541,00
B4035.C6.04-11.Z1.P15		1	●	052	8095727	4.541,00

Bezeichnung / Designation	Sorte / Grade	VE / US		Disc. Gr.	Article No.	EURO Stück / piece
B4035.C6.05-12.Z1.P15.M		1	●	052	8095729	4.541,00
B4035.C6.05-12.Z1.P15.S		1	●	052	8095728	4.541,00
B4035.C6.06-13.Z1.P15.M		1	●	052	8095731	4.541,00
B4035.C6.06-13.Z1.P15.S		1	●	052	8095730	4.541,00
B4035.C6.08-15.Z1.P15.M		1	●	052	8095733	4.541,00
B4035.C6.08-15.Z1.P15.S		1	●	052	8095732	4.541,00
B4035.C6.10-12.Z1.WC03		1	●	052	8095744	4.833,00
B4035.C6.10-17.Z1.WC03		1	●	052	8095734	4.342,00
B4035.C6.11-18.Z1.WC03		1	●	052	8095735	4.342,00
B4035.C6.12-14.Z1.WC03		1	●	052	8095745	4.833,00
B4035.C6.12-19.Z1.WC03		1	●	052	8095736	4.342,00
B4035.C6.13-20.Z1.WC03		1	●	052	8095737	4.342,00
B4035.C6.14-16.Z1.WC03		1	●	052	8095746	4.833,00
B4035.C6.14-21.Z1.WC03		1	●	052	8095738	4.342,00
B4035.C6.15-22.Z1.WC03		1	●	052	8095739	4.342,00
B4035.C6.16-18.Z1.WC03		1	●	052	8095747	4.833,00
B4035.C6.16-23.Z1.WC03		1	●	052	8095740	4.342,00
B4035.C6.17-24.Z1.WC03		1	●	052	8095741	4.342,00
B4035.C6.18-20.Z1.WC03		1	●	052	8095748	4.833,00
B4035.C6.18-25.Z1.WC03		1	●	052	8095742	4.342,00
B4035.C6.19-26.Z1.WC03		1	●	052	8095743	4.342,00
B4035.C6.20-24.Z1.WC04.M		1	●	052	8095750	5.278,00
B4035.C6.20-24.Z1.WC04.S		1	●	052	8095749	4.712,00
B4035.C6.22-26.Z1.WC04.M		1	●	052	8095752	5.278,00
B4035.C6.22-26.Z1.WC04.S		1	●	052	8095751	4.712,00
B4035.C6.24-28.Z1.WC04.M		1	●	052	8095754	5.278,00
B4035.C6.24-28.Z1.WC04.S		1	●	052	8095753	4.712,00
B4035.C6.26-30.Z1.WC04.M		1	●	052	8095756	5.278,00
B4035.C6.26-30.Z1.WC04.S		1	●	052	8095755	4.712,00
B4035.C6.28-32.Z1.WC04.M		1	●	052	8095758	5.278,00
B4035.C6.28-32.Z1.WC04.S		1	●	052	8095757	4.712,00
B4035.C6.30-34.Z1.WC04.M		1	●	052	8095760	5.278,00
B4035.C6.30-34.Z1.WC04.S		1	●	052	8095759	4.712,00
B4035.C6.32-41.Z1.WC04		1	●	052	8095761	4.764,00
B4035.C6.41-50.Z1.WC04		1	●	052	8095762	4.764,00
B4035.C6.50-59.Z1.WC04		1	●	052	8095763	4.798,00
B4035.C6.59-68.Z1.WC04		1	●	052	8095764	4.798,00
B4035.C6.68-96.Z1.WC04		1	●	052	8095765	4.835,00
B4035.C6.96-124.Z1.WC04		1	●	052	8095766	4.835,00
B4035.T45.03-10.Z1.P15		1	●	052	8095644	3.957,00
B4035.T45.04-11.Z1.P15		1	●	052	8095645	3.957,00
B4035.T45.05-12.Z1.P15.M		1	●	052	8095647	3.957,00
B4035.T45.05-12.Z1.P15.S		1	●	052	8095646	3.957,00
B4035.T45.06-13.Z1.P15.M		1	●	052	8095649	3.957,00
B4035.T45.06-13.Z1.P15.S		1	●	052	8095648	3.957,00
B4035.T45.08-15.Z1.P15.M		1	●	052	8095651	3.957,00
B4035.T45.08-15.Z1.P15.S		1	●	052	8095650	3.957,00
B4035.T45.10-12.Z1.WC03		1	●	052	8095662	4.249,00
B4035.T45.10-17.Z1.WC03		1	●	052	8095652	3.758,00
B4035.T45.11-18.Z1.WC03		1	●	052	8095653	3.758,00
B4035.T45.12-14.Z1.WC03		1	●	052	8095663	4.249,00
B4035.T45.12-19.Z1.WC03		1	●	052	8095654	3.758,00
B4035.T45.13-20.Z1.WC03		1	●	052	8095655	3.758,00
B4035.T45.14-16.Z1.WC03		1	●	052	8095664	4.249,00
B4035.T45.14-21.Z1.WC03		1	●	052	8095656	3.758,00
B4035.T45.15-22.Z1.WC03		1	●	052	8095657	3.758,00
B4035.T45.16-18.Z1.WC03		1	●	052	8095665	4.249,00
B4035.T45.16-23.Z1.WC03		1	●	052	8095658	3.758,00
B4035.T45.17-24.Z1.WC03		1	●	052	8095659	3.758,00
B4035.T45.18-20.Z1.WC03		1	●	052	8095666	4.249,00
B4035.T45.18-25.Z1.WC03		1	●	052	8095660	3.758,00
B4035.T45.19-26.Z1.WC03		1	●	052	8095661	3.758,00
B4035.T45.20-24.Z1.WC04M		1	●	052	8095668	4.694,00
B4035.T45.20-24.Z1.WC04S		1	●	052	8095667	4.128,00
B4035.T45.22-26.Z1.WC04M		1	●	052	8095670	4.694,00
B4035.T45.22-26.Z1.WC04S		1	●	052	8095669	4.128,00
B4035.T45.24-28.Z1.WC04M		1	●	052	8095672	4.694,00
B4035.T45.24-28.Z1.WC04S		1	●	052	8095671	4.128,00
B4035.T45.26-30.Z1.WC04M		1	●	052	8095674	4.694,00
B4035.T45.26-30.Z1.WC04S		1	●	052	8095673	4.128,00

Bezeichnung / Designation	Sorte / Grade	VE / US		Disc. Gr.	Article No.	EURO Stück / piece
B4035.T45.28-32.Z1.WC04M		1	●	052	8095676	4.694,00
B4035.T45.28-32.Z1.WC04S		1	●	052	8095675	4.128,00
B4035.T45.30-34.Z1.WC04M		1	●	052	8095678	4.694,00
B4035.T45.30-34.Z1.WC04S		1	●	052	8095677	4.128,00
B4035.T45.32-41.Z1.WC04		1	●	052	8095679	4.180,00
B4035.T45.41-50.Z1.WC04		1	●	052	8095680	4.180,00
B4035.T45.50-59.Z1.WC04		1	●	052	8095681	4.214,00
B4035.T45.59-68.Z1.WC04		1	●	052	8095682	4.214,00
B4035.T45.68-96.Z1.WC04		1	●	052	8095683	4.251,00
B4035.T45.96-124.Z1.WC04		1	●	052	8095684	4.251,00
B4035.UC6.03-10.Z1.P15		1	●	052	8095767	4.541,00
B4035.UC6.04-11.Z1.P15		1	●	052	8095768	4.541,00
B4035.UC6.05-12.Z1.P15.M		1	●	052	8095770	4.541,00
B4035.UC6.05-12.Z1.P15.S		1	●	052	8095769	4.541,00
B4035.UC6.06-13.Z1.P15.M		1	●	052	8095772	4.541,00
B4035.UC6.06-13.Z1.P15.S		1	●	052	8095771	4.541,00
B4035.UC6.08-15.Z1.P15.M		1	●	052	8095774	4.541,00
B4035.UC6.08-15.Z1.P15.S		1	●	052	8095773	4.541,00
B4035.UC6.10-12.Z1.WC03		1	●	052	8095785	4.833,00
B4035.UC6.10-17.Z1.WC03		1	●	052	8095775	4.342,00
B4035.UC6.11-18.Z1.WC03		1	●	052	8095776	4.342,00
B4035.UC6.12-14.Z1.WC03		1	●	052	8095786	4.833,00
B4035.UC6.12-19.Z1.WC03		1	●	052	8095777	4.342,00
B4035.UC6.13-20.Z1.WC03		1	●	052	8095778	4.342,00
B4035.UC6.14-16.Z1.WC03		1	●	052	8095787	4.833,00
B4035.UC6.14-21.Z1.WC03		1	●	052	8095779	4.342,00
B4035.UC6.15-22.Z1.WC03		1	●	052	8095780	4.342,00
B4035.UC6.16-18.Z1.WC03		1	●	052	8095788	4.833,00
B4035.UC6.16-23.Z1.WC03		1	●	052	8095781	4.342,00
B4035.UC6.17-24.Z1.WC03		1	●	052	8095782	4.342,00
B4035.UC6.18-20.Z1.WC03		1	●	052	8095789	4.833,00
B4035.UC6.18-25.Z1.WC03		1	●	052	8095783	4.342,00
B4035.UC6.19-26.Z1.WC03		1	●	052	8095784	4.342,00
B4035.UC6.20-24.Z1.WC04M		1	●	052	8095791	5.278,00
B4035.UC6.20-24.Z1.WC04S		1	●	052	8095790	4.712,00
B4035.UC6.22-26.Z1.WC04M		1	●	052	8095793	5.278,00
B4035.UC6.22-26.Z1.WC04S		1	●	052	8095792	4.712,00
B4035.UC6.24-28.Z1.WC04M		1	●	052	8095795	5.278,00
B4035.UC6.24-28.Z1.WC04S		1	●	052	8095794	4.712,00
B4035.UC6.26-30.Z1.WC04M		1	●	052	8095797	5.278,00
B4035.UC6.26-30.Z1.WC04S		1	●	052	8095796	4.712,00
B4035.UC6.28-32.Z1.WC04M		1	●	052	8095799	5.278,00
B4035.UC6.28-32.Z1.WC04S		1	●	052	8095798	4.712,00
B4035.UC6.30-34.Z1.WC04M		1	●	052	8095801	5.278,00
B4035.UC6.30-34.Z1.WC04S		1	●	052	8095800	4.712,00
B4035.UC6.32-41.Z1.WC04		1	●	052	8095802	4.764,00
B4035.UC6.41-50.Z1.WC04		1	●	052	8095803	4.764,00
B4035.UC6.50-59.Z1.WC04		1	●	052	8095804	4.798,00
B4035.UC6.59-68.Z1.WC04		1	●	052	8095805	4.798,00
B4035.UC6.68-96.Z1.WC04		1	●	052	8095806	4.835,00
B4035.UC6.96-124.Z1.WC04		1	●	052	8095807	4.835,00
B4035.UT45.03-10.Z1.P15		1	●	052	8095685	3.957,00
B4035.UT45.04-11.Z1.P15		1	●	052	8095686	3.957,00
B4035.UT45.05-12.Z1.P15M		1	●	052	8095688	3.957,00
B4035.UT45.05-12.Z1.P15S		1	●	052	8095687	3.957,00
B4035.UT45.06-13.Z1.P15M		1	●	052	8095690	3.957,00
B4035.UT45.06-13.Z1.P15S		1	●	052	8095689	3.957,00
B4035.UT45.08-15.Z1.P15M		1	●	052	8095692	3.957,00
B4035.UT45.08-15.Z1.P15S		1	●	052	8095691	3.957,00
B4035.UT45.10-12.Z1.WC03		1	●	052	8095703	4.249,00
B4035.UT45.10-17.Z1.WC03		1	●	052	8095693	3.758,00
B4035.UT45.11-18.Z1.WC03		1	●	052	8095694	3.758,00
B4035.UT45.12-14.Z1.WC03		1	●	052	8095704	4.249,00
B4035.UT45.12-19.Z1.WC03		1	●	052	8095695	3.758,00
B4035.UT45.13-20.Z1.WC03		1	●	052	8095696	3.758,00
B4035.UT45.14-16.Z1.WC03		1	●	052	8095705	4.249,00
B4035.UT45.14-21.Z1.WC03		1	●	052	8095697	3.758,00
B4035.UT45.15-22.Z1.WC03		1	●	052	8095698	3.758,00
B4035.UT45.16-18.Z1.WC03		1	●	052	8095706	4.249,00
B4035.UT45.16-23.Z1.WC03		1	●	052	8095699	3.758,00

Bezeichnung / Designation	Sorte / Grade	VE / US		Disc. Gr.	Article No.	EURO Stück / piece
B4035.UT45.17-24.Z1.WC03		1	●	052	8095700	3.758,00
B4035.UT45.18-20.Z1.WC03		1	●	052	8095707	4.249,00
B4035.UT45.18-25.Z1.WC03		1	●	052	8095701	3.758,00
B4035.UT45.19-26.Z1.WC03		1	●	052	8095702	3.758,00
B4035.UT45.20-24.Z1WC04M		1	●	052	8095709	4.694,00
B4035.UT45.20-24.Z1WC04S		1	●	052	8095708	4.128,00
B4035.UT45.22-26.Z1WC04M		1	●	052	8095711	4.694,00
B4035.UT45.22-26.Z1WC04S		1	●	052	8095710	4.128,00
B4035.UT45.24-28.Z1WC04M		1	●	052	8095713	4.694,00
B4035.UT45.24-28.Z1WC04S		1	●	052	8095712	4.128,00
B4035.UT45.26-30.Z1WC04M		1	●	052	8095715	4.694,00
B4035.UT45.26-30.Z1WC04S		1	●	052	8095714	4.128,00
B4035.UT45.28-32.Z1WC04M		1	●	052	8095717	4.694,00
B4035.UT45.28-32.Z1WC04S		1	●	052	8095716	4.128,00
B4035.UT45.30-34.Z1WC04M		1	●	052	8095719	4.694,00
B4035.UT45.30-34.Z1WC04S		1	●	052	8095718	4.128,00
B4035.UT45.32-41.Z1.WC04		1	●	052	8095720	4.180,00
B4035.UT45.41-50.Z1.WC04		1	●	052	8095721	4.180,00
B4035.UT45.50-59.Z1.WC04		1	●	052	8095722	4.214,00
B4035.UT45.59-68.Z1.WC04		1	●	052	8095723	4.214,00
B4035.UT45.68-96.Z1.WC04		1	●	052	8095724	4.251,00
B4035.UT45.96-124.Z1WC04		1	●	052	8095725	4.251,00
B4035G.C6.002-124.Z1		1	●	052	6427942	4.212,00
B4035G.T45.002-124.Z1		1	●	052	5336158	3.628,00
B4035G.UC6.002-124.Z1		1	●	052	7016519	4.212,00
B4035G.UT45.002-124.Z1		1	●	052	5336257	3.628,00
B4213.F40.42.Z1.126R-6		1	●	050	5612476	541,00
B4213.F40.49.Z1.147R-7		1	●	050	5614647	606,00
B4214.F40.39.Z1.156R-6		1	●	050	5682292	596,00
B4214.F40.42.Z1.168R-6		1	●	050	5682295	596,00
B4214.F40.49.Z1.196R-7		1	●	050	5682306	667,00
B5110-001-003-C3-CS		1	●	052	8218020	993,00
B5110-001-003-N2-CS		1	●	052	8218032	993,00
B5110-001-003-T22-CS		1	●	052	8218044	993,00
B5110-001-006-C3-B		1	●	052	8217175	907,00
B5110-001-006-N2-B		1	●	052	8217176	907,00
B5110-001-006-T22-B		1	●	052	8217177	907,00
B5110-0017-0037-C3-CS		1	●	052	8218021	993,00
B5110-0017-0037-N2-CS		1	●	052	8218033	993,00
B5110-0017-0037-T22-CS		1	●	052	8218045	993,00
B5110-0022-0042-C3-CS		1	●	052	8218022	995,00
B5110-0022-0042-N2-CS		1	●	052	8218034	995,00
B5110-0022-0042-T22-CS		1	●	052	8218046	995,00
B5110-0027-0047-C3-CS		1	●	052	8218023	995,00
B5110-0027-0047-N2-CS		1	●	052	8218035	995,00
B5110-0027-0047-T22-CS		1	●	052	8218047	995,00
B5110-0032-0052-C3-CS		1	●	052	8218024	999,00
B5110-0032-0052-N2-CS		1	●	052	8218036	999,00
B5110-0032-0052-T22-CS		1	●	052	8218048	999,00
B5110-0042-0062-C3-CS		1	●	052	8218025	999,00
B5110-0042-0062-N2-CS		1	●	052	8218037	999,00
B5110-0042-0062-T22-CS		1	●	052	8218049	999,00
B5110-006-010-C3-B		1	●	052	8217178	907,00
B5110-006-010-N2-B		1	●	052	8217179	907,00
B5110-006-010-T22-B		1	●	052	8217220	907,00
B5110-0062-0082-C3-CS		1	●	052	8218026	1.007,00
B5110-0062-0082-N2-CS		1	●	052	8218038	1.007,00
B5110-0062-0082-T22-CS		1	●	052	8218050	1.007,00
B5110-008-010-C3-TC06		1	●	052	8218027	1.212,00
B5110-008-010-N2-TC06		1	●	052	8218039	1.212,00
B5110-008-010-T22-TC06		1	●	052	8218051	1.212,00
B5110-010-012-C3-TC06		1	●	052	8218028	1.212,00
B5110-010-012-N3-TC06		1	●	052	8218040	1.212,00
B5110-010-012-T28-TC06		1	●	052	8218052	1.212,00
B5110-010-014-C3-B		1	●	052	8217221	907,00
B5110-010-014-N3-B		1	●	052	8217222	907,00
B5110-010-014-T28-B		1	●	052	8217223	907,00
B5110-012-014-C3-TC06		1	●	052	8218029	1.212,00
B5110-012-014-N3-TC06		1	●	052	8218041	1.212,00
B5110-012-014-T28-TC06		1	●	052	8218053	1.212,00

Bezeichnung / Designation	Sorte / Grade	VE / US		Disc. Gr.	Article No.	EURO Stück / piece
B5110-014-017-C4-TC09		1	●	052	8218030	1.212,00
B5110-014-017-N4-TC09		1	●	052	8218042	1.212,00
B5110-014-017-T36-TC09		1	●	052	8218054	1.212,00
B5110-014-020-C4-B		1	●	052	8217224	907,00
B5110-014-020-N4-B		1	●	052	8217225	907,00
B5110-014-020-T36-B		1	●	052	8217226	907,00
B5110-017-020-C4-TC09		1	●	052	8218031	1.212,00
B5110-017-020-N4-TC09		1	●	052	8218043	1.212,00
B5110-017-020-T36-TC09		1	●	052	8218055	1.212,00
B5115-019-023-C3-B		1	●	052	8217227	1.134,00
B5115-019-023-C3-TC06		1	●	052	8218056	1.342,00
B5115-019-023-N2-B		1	●	052	8217228	1.134,00
B5115-019-023-N2-TC06		1	●	052	8218073	1.342,00
B5115-019-023-T18-B		1	●	052	8217229	1.134,00
B5115-019-023-T18-TC06		1	●	052	8218085	1.342,00
B5115-023-029-C3-B		1	●	052	8217230	1.134,00
B5115-023-029-C3-TC06		1	●	052	8218057	1.190,00
B5115-023-029-N2-B		1	●	052	8217231	1.134,00
B5115-023-029-N2-TC06		1	●	052	8218074	1.190,00
B5115-023-029-T18-B		1	●	052	8217232	1.134,00
B5115-023-029-T18-TC06		1	●	052	8218086	1.190,00
B5115-028-036-C3-B		1	●	052	8217233	1.134,00
B5115-028-036-C3-TC06		1	●	052	8218058	1.190,00
B5115-028-036-N2-B		1	●	052	8217234	1.134,00
B5115-028-036-N2-TC06		1	●	052	8218075	1.190,00
B5115-028-036-T22-B		1	●	052	8217235	1.134,00
B5115-028-036-T22-TC06		1	●	052	8218087	1.190,00
B5115-035-045-C3-B		1	●	052	8217236	1.134,00
B5115-035-045-C3-CC06		1	●	052	8246814	1.342,00
B5115-035-045-C3-TC09		1	●	052	8218059	1.342,00
B5115-035-045-N3-B		1	●	052	8217237	1.134,00
B5115-035-045-N3-CC06		1	●	052	8246815	1.342,00
B5115-035-045-N3-TC09		1	●	052	8218076	1.342,00
B5115-035-045-T28-B		1	●	052	8217238	1.134,00
B5115-035-045-T28-CC06		1	●	052	8246816	1.342,00
B5115-035-045-T28-TC09		1	●	052	8218088	1.342,00
B5115-044-056-C4-B		1	●	052	8217239	1.134,00
B5115-044-056-C4-CC06		1	●	052	8246817	1.342,00
B5115-044-056-C4-TC09		1	●	052	8218060	1.342,00
B5115-044-056-N4-B		1	●	052	8217240	1.134,00
B5115-044-056-N4-CC06		1	●	052	8246818	1.342,00
B5115-044-056-N4-TC09		1	●	052	8218077	1.342,00
B5115-044-056-T36-B		1	●	052	8217241	1.134,00
B5115-044-056-T36-CC06		1	●	052	8246819	1.342,00
B5115-044-056-T36-TC09		1	●	052	8218089	1.342,00
B5115-055-070-C5-B		1	●	052	8217242	1.134,00
B5115-055-070-C5-CC09		1	●	052	8246820	1.342,00
B5115-055-070-C5-TC11		1	●	052	8218062	1.342,00
B5115-055-070-N5-B		1	●	052	8217243	1.134,00
B5115-055-070-N5-CC09		1	●	052	8246821	1.342,00
B5115-055-070-N5-TC11		1	●	052	8218078	1.342,00
B5115-055-070-T45-B		1	●	052	8217244	1.134,00
B5115-055-070-T45-CC09		1	●	052	8246822	1.342,00
B5115-055-070-T45-TC11		1	●	052	8218090	1.342,00
B5115-069-087-C6-B		1	●	052	8217246	1.134,00
B5115-069-087-C6-CC09		1	●	052	8246823	1.342,00
B5115-069-087-C6-TC11		1	●	052	8218063	1.342,00
B5115-069-087-N6-B		1	●	052	8217247	1.134,00
B5115-069-087-N6-CC09		1	●	052	8246824	1.342,00
B5115-069-087-N6-TC11		1	●	052	8218079	1.342,00
B5115-086-107-C6-B		1	●	052	8217249	1.134,00
B5115-086-107-C6-CC09		1	●	052	8246825	1.342,00
B5115-086-107-C6-TC11		1	●	052	8218064	1.342,00
B5115-086-107-N6-B		1	●	052	8217250	1.134,00
B5115-086-107-N6-CC09		1	●	052	8246826	1.342,00
B5115-086-107-N6-TC11		1	●	052	8218080	1.342,00
B5115-106-137-C6-B		1	●	052	8217251	1.134,00
B5115-106-137-C6-CC09		1	●	052	8246827	1.342,00
B5115-106-137-C6-TC11		1	●	052	8218065	1.342,00
B5115-106-137-C8-B		1	●	052	8217253	1.134,00

Bezeichnung / Designation	Sorte / Grade	VE / US		Disc. Gr.	Article No.	EURO Stück / piece
B5115-106-137-C8-CC09		1	●	052	8246828	1.342,00
B5115-106-137-C8-TC11		1	●	052	8218066	1.342,00
B5115-106-137-N6-B		1	●	052	8217254	1.134,00
B5115-106-137-N6-CC09		1	●	052	8246829	1.342,00
B5115-106-137-N6-TC11		1	●	052	8218081	1.342,00
B5115-106-137-N8-B		1	●	052	8217255	1.134,00
B5115-106-137-N8-CC09		1	●	052	8246830	1.342,00
B5115-106-137-N8-TC11		1	●	052	8218082	1.342,00
B5115-136-167-C6-B		1	●	052	8217256	1.134,00
B5115-136-167-C6-CC09		1	●	052	8246831	1.342,00
B5115-136-167-C6-TC11		1	●	052	8218067	1.342,00
B5115-136-167-C8-B		1	●	052	8217257	1.134,00
B5115-136-167-C8-CC09		1	●	052	8246832	1.342,00
B5115-136-167-C8-TC11		1	●	052	8218068	1.342,00
B5115-136-167-N6-B		1	●	052	8217259	1.134,00
B5115-136-167-N6-CC09		1	●	052	8246833	1.342,00
B5115-136-167-N6-TC11		1	●	052	8218083	1.342,00
B5115-136-167-N8-B		1	●	052	8217260	1.134,00
B5115-136-167-N8-CC09		1	●	052	8246834	1.342,00
B5115-136-167-N8-TC11		1	●	052	8218084	1.342,00
B5120-148-000-C8-B		1	●	052	8217261	793,00
B5120-148-000-N8-B		1	●	052	8217262	793,00
B5120-148-215-C8-CC09		1	●	052	8218105	3.104,00
B5120-148-215-C8-TC11		1	●	052	8218091	3.104,00
B5120-148-215-N8-CC09		1	●	052	8218112	3.104,00
B5120-148-215-N8-TC11		1	●	052	8218098	3.104,00
B5120-198-000-C8-B		1	●	052	8217263	793,00
B5120-198-000-N8-B		1	●	052	8217264	793,00
B5120-198-265-C8-CC09		1	●	052	8218106	3.104,00
B5120-198-265-C8-TC11		1	●	052	8218092	3.104,00
B5120-198-265-N8-CC09		1	●	052	8218113	3.104,00
B5120-198-265-N8-TC11		1	●	052	8218099	3.104,00
B5120-248-000-C8-B		1	●	052	8217265	793,00
B5120-248-000-N8-B		1	●	052	8217266	793,00
B5120-248-315-C8-CC09		1	●	052	8218107	3.104,00
B5120-248-315-C8-TC11		1	●	052	8218093	3.104,00
B5120-248-315-N8-CC09		1	●	052	8218114	3.104,00
B5120-248-315-N8-TC11		1	●	052	8218100	3.104,00
B5120-298-000-C8-B		1	●	052	8217267	793,00
B5120-298-000-N8-B		1	●	052	8217268	793,00
B5120-298-395-C8-CC09		1	●	052	8218108	3.284,00
B5120-298-395-C8-TC11		1	●	052	8218094	3.284,00
B5120-298-395-N8-CC09		1	●	052	8218115	3.284,00
B5120-298-395-N8-TC11		1	●	052	8218101	3.284,00
B5120-378-475-C8-CC09		1	●	052	8218109	3.284,00
B5120-378-475-C8-TC11		1	●	052	8218095	3.284,00
B5120-378-475-N8-CC09		1	●	052	8218116	3.284,00
B5120-378-475-N8-TC11		1	●	052	8218102	3.284,00
B5120-458-555-C8-CC09		1	●	052	8218110	3.284,00
B5120-458-555-C8-TC11		1	●	052	8218096	3.284,00
B5120-458-555-N8-CC09		1	●	052	8218117	3.284,00
B5120-458-555-N8-TC11		1	●	052	8218103	3.284,00
B5120-538-635-C8-CC09		1	●	052	8218111	3.284,00
B5120-538-635-C8-TC11		1	●	052	8218097	3.284,00
B5120-538-635-N8-CC09		1	●	052	8218118	3.284,00
B5120-538-635-N8-TC11		1	●	052	8218104	3.284,00
B5125-069-087-C5-B		1	●	052	8217245	1.474,00
B5125-069-087-C5-CC09		1	●	052	8246835	1.699,00
B5125-069-087-C5-TC11		1	●	052	8218069	1.699,00
B5125-086-107-C5-B		1	●	052	8217248	1.474,00
B5125-086-107-C5-CC09		1	●	052	8246836	1.699,00
B5125-086-107-C5-TC11		1	●	052	8218070	1.699,00
B5125-106-137-C6-B		1	●	052	8217252	1.474,00
B5125-106-137-C6-CC09		1	●	052	8246837	1.699,00
B5125-106-137-C6-TC11		1	●	052	8218071	1.699,00
B5125-136-167-C8-B		1	●	052	8217258	1.474,00
B5125-136-167-C8-CC09		1	●	052	8246838	1.699,00
B5125-136-167-C8-TC11		1	●	052	8218072	1.699,00
B5460-148-200-C8-CC12		1	●	052	8218119	1.817,00
B5460-148-200-C8-CN19		1	●	052	8218133	1.817,00

Bezeichnung / Designation	Sorte / Grade	VE / US		Disc. Gr.	Article No.	EURO Stück / piece
B5460-148-200-C8-SC12		1	●	052	8218147	1.817,00
B5460-148-200-N8-CC12		1	●	052	8218126	1.817,00
B5460-148-200-N8-CN19		1	●	052	8218140	1.817,00
B5460-148-200-N8-SC12		1	●	052	8218154	1.817,00
B5460-198-250-C8-CC12		1	●	052	8218120	1.817,00
B5460-198-250-C8-CN19		1	●	052	8218134	1.817,00
B5460-198-250-C8-SC12		1	●	052	8218148	1.817,00
B5460-198-250-N8-CC12		1	●	052	8218127	1.817,00
B5460-198-250-N8-CN19		1	●	052	8218141	1.817,00
B5460-198-250-N8-SC12		1	●	052	8218155	1.817,00
B5460-248-300-C8-CC12		1	●	052	8218121	1.817,00
B5460-248-300-C8-CN19		1	●	052	8218135	1.817,00
B5460-248-300-C8-SC12		1	●	052	8218149	1.817,00
B5460-248-300-N8-CC12		1	●	052	8218128	1.817,00
B5460-248-300-N8-CN19		1	●	052	8218142	1.817,00
B5460-248-300-N8-SC12		1	●	052	8218156	1.817,00
B5460-298-380-C8-CC12		1	●	052	8218122	1.952,00
B5460-298-380-C8-CN19		1	●	052	8218136	1.952,00
B5460-298-380-C8-SC12		1	●	052	8218150	1.952,00
B5460-298-380-N8-CC12		1	●	052	8218129	1.952,00
B5460-298-380-N8-CN19		1	●	052	8218143	1.952,00
B5460-298-380-N8-SC12		1	●	052	8218157	1.952,00
B5460-378-460-C8-CC12		1	●	052	8218123	1.952,00
B5460-378-460-C8-CN19		1	●	052	8218137	1.952,00
B5460-378-460-C8-SC12		1	●	052	8218151	1.952,00
B5460-378-460-N8-CC12		1	●	052	8218130	1.952,00
B5460-378-460-N8-CN19		1	●	052	8218144	1.952,00
B5460-378-460-N8-SC12		1	●	052	8218158	1.952,00
B5460-458-540-C8-CC12		1	●	052	8218124	1.952,00
B5460-458-540-C8-CN19		1	●	052	8218138	1.952,00
B5460-458-540-C8-SC12		1	●	052	8218152	1.952,00
B5460-458-540-N8-CC12		1	●	052	8218131	1.952,00
B5460-458-540-N8-CN19		1	●	052	8218145	1.952,00
B5460-458-540-N8-SC12		1	●	052	8218159	1.952,00
B5460-538-620-C8-CC12		1	●	052	8218125	1.952,00
B5460-538-620-C8-CN19		1	●	052	8218139	1.952,00
B5460-538-620-C8-SC12		1	●	052	8218153	1.952,00
B5460-538-620-N8-CC12		1	●	052	8218132	1.952,00
B5460-538-620-N8-CN19		1	●	052	8218146	1.952,00
B5460-538-620-N8-SC12		1	●	052	8218160	1.952,00
B5560-148-200-C8-P400		1	●	052	8218161	1.817,00
B5560-148-200-N8-P400		1	●	052	8218168	1.817,00
B5560-198-250-C8-P400		1	●	052	8218162	1.817,00
B5560-198-250-N8-P400		1	●	052	8218169	1.817,00
B5560-248-300-C8-P400		1	●	052	8218163	1.817,00
B5560-248-300-N8-P400		1	●	052	8218170	1.817,00
B5560-298-380-C8-P400		1	●	052	8218164	1.952,00
B5560-298-380-N8-P400		1	●	052	8218171	1.952,00
B5560-378-460-C8-P400		1	●	052	8218165	1.952,00
B5560-378-460-N8-P400		1	●	052	8218172	1.952,00
B5560-458-540-C8-P400		1	●	052	8218166	1.952,00
B5560-458-540-N8-P400		1	●	052	8218173	1.952,00
B5560-538-620-C8-P400		1	●	052	8218167	1.952,00
B5560-538-620-N8-P400		1	●	052	8218174	1.952,00
BCGT090304R-B85	WDN20	2	●	006	8168993	110,00
BCGT090304R-G55	WAK15	10	●	004	7540026	22,76
BCGT090304R-G55	WKP25S	10	●	004	7540024	22,76
BCGT090304R-G55	WKP35G	10	●	004	7540025	27,30
BCGT090304R-G55	WKP35S	10	●	004	7677386	22,76
BCGT090304R-G55	WSM35G	10	●	004	8284976	23,90
BCGT090304R-G55	WSM35S	10	■	004	7539575*	23,90
BCGT090304R-G55	WSP45G	10	●	004	7988591	23,90
BCGT090304R-K85	WK10	10	●	004	7539577	17,95
BCGT090304R-K85	WXN15	10	●	004	7539578	22,13
BCGT120408R-B85	WDN20	2	●	006	8168994	119,00
BCGT120408R-G55	WAK15	10	■	004	7540023*	24,56
BCGT120408R-G55	WKP25S	10	●	004	7540021	24,56
BCGT120408R-G55	WKP35G	10	●	004	7540022	29,50
BCGT120408R-G55	WKP35S	10	●	004	7677511	24,56
BCGT120408R-G55	WSM35G	10	●	004	8284977	25,80

Bezeichnung / Designation	Sorte / Grade	VE / US		Disc. Gr.	Article No.	EURO Stück / piece
BCGT120408R-G55	WSM35S	10	■	004	7539625*	25,80
BCGT120408R-G55	WSP45G	10	●	004	7924199	25,80
BCGT160508R-G55	WAK15	10	●	004	7540020	28,30
BCGT160508R-G55	WKP25S	10	●	004	7539978	28,30
BCGT160508R-G55	WKP35G	10	●	004	7539979	34,00
BCGT160508R-G55	WKP35S	10	●	004	7677526	28,30
BCGT160508R-G55	WSM35G	10	●	004	8284978	29,70
BCGT160508R-G55	WSM35S	10	■	004	7539679*	29,70
BCGT160508R-G55	WSP45G	10	●	004	7924201	29,70
BCGX0903PDR-G55	WAK15	10	●	004	7539695	27,50
BCGX0903PDR-G55	WHH15X	10	●	004	7960066	30,30
BCGX0903PDR-G55	WXM15	10	●	004	7539697	27,50
BCGX1605PDR-G55	WAK15	10	●	004	7539698	32,60
BCGX1605PDR-G55	WHH15X	10	●	004	7960067	35,80
BCGX1605PDR-G55	WXM15	10	●	004	7539700	32,60
BCHT120404R-K85	WK10	10	●	004	8131071	19,24
BCHT120404R-K85	WXN15	10	●	004	8131072	23,90
BCHT120408R-K85	WK10	10	●	004	7539628	19,24
BCHT120408R-K85	WXN15	10	●	004	7539629	23,90
BCHT120412R-K85	WK10	10	●	004	7539630	19,24
BCHT120412R-K85	WXN15	10	●	004	7539631	23,90
BCHT120416R-K85	WK10	10	●	004	7539632	19,24
BCHT120416R-K85	WXN15	10	●	004	7539633	23,90
BCHT120420R-K85	WK10	10	●	004	7539634	19,24
BCHT120420R-K85	WXN15	10	●	004	7539635	23,90
BCHT120425R-K85	WK10	10	●	004	7539636	19,24
BCHT120425R-K85	WXN15	10	●	004	7539637	23,90
BCHT120430R-K85	WK10	10	●	004	7539638	19,24
BCHT120430R-K85	WXN15	10	●	004	7539639	23,90
BCHT120440R-K85	WK10	10	●	004	7539640	19,24
BCHT120440R-K85	WXN15	10	●	004	7539641	23,90
BCHT160508R-K85	WK10	10	●	004	7539681	22,40
BCHT160508R-K85	WXN15	10	●	004	7539682	27,60
BCHT160512R-K85	WK10	10	●	004	7539683	22,40
BCHT160512R-K85	WXN15	10	●	004	7539684	27,60
BCHT160516R-K85	WK10	10	●	004	7539685	22,40
BCHT160516R-K85	WXN15	10	●	004	7539686	27,60
BCHT160520R-K85	WK10	10	●	004	7539687	22,40
BCHT160520R-K85	WXN15	10	●	004	7539688	27,60
BCHT160525R-K85	WK10	10	●	004	7539689	22,40
BCHT160525R-K85	WXN15	10	●	004	7539690	27,60
BCHT160530R-K85	WK10	10	●	004	7539691	22,40
BCHT160530R-K85	WXN15	10	●	004	7539692	27,60
BCHT160540R-K85	WK10	10	●	004	7539693	22,40
BCHT160540R-K85	WXN15	10	●	004	7539694	27,60
BCMT090302R-G55	WKP35G	10	●	004	7539527	20,99
BCMT090302R-G55	WKP35S	10	●	004	7677460	17,48
BCMT090302R-G55	WSP45G	10	●	004	7539528	18,37
BCMT090304R-F55	WAK15	10	●	004	7539529	17,48
BCMT090304R-F55	WKK25G	10	●	004	8284918	18,37
BCMT090304R-F55	WKK25S	10	■	004	7539550*	18,37
BCMT090304R-F55	WKP25S	10	●	004	7539551	17,48
BCMT090304R-F55	WKP35G	10	●	004	7539552	20,99
BCMT090304R-F55	WKP35S	10	●	004	7677461	17,48
BCMT090304R-F55	WSM45X	10	●	004	8112742	22,22
BCMT090304R-F55	WSP45G	10	●	004	7539553	18,37
BCMT090304R-G55	WAK15	10	●	004	7539554	17,48
BCMT090304R-G55	WKK25G	10	●	004	8284901	18,37
BCMT090304R-G55	WKK25S	10	■	004	7539556*	18,37
BCMT090304R-G55	WKP25S	10	●	004	7539555	17,48
BCMT090304R-G55	WKP35G	10	●	004	7539557	20,99
BCMT090304R-G55	WKP35S	10	●	004	7677462	17,48
BCMT090304R-G55	WSM35G	10	●	004	8284979	18,37
BCMT090304R-G55	WSM35S	10	■	004	7539558*	18,37
BCMT090304R-G55	WSM45X	10	●	004	8112743	22,22
BCMT090304R-G55	WSP45G	10	●	004	7539559	18,37
BCMT090304R-K55	WKP35G	10	●	004	7539560	20,99
BCMT090304R-K55	WKP35S	10	●	004	7677463	17,48
BCMT090304R-K55	WSM35G	10	●	004	8284980	18,37
BCMT090304R-K55	WSM35S	10	■	004	7539561*	18,37

Bezeichnung / Designation	Sorte / Grade	VE / US		Disc. Gr.	Article No.	EURO Stück / piece
BCMT090304R-K55	WSP45G	10	●	004	7539562	18,37
BCMT090308R-G55	WKP35G	10	●	004	7539563	20,99
BCMT090308R-G55	WKP35S	10	●	004	7677464	17,48
BCMT090308R-G55	WSM45X	10	●	004	8112698	22,22
BCMT090308R-G55	WSP45G	10	●	004	7539564	18,37
BCMT090312R-G55	WKP35G	10	●	004	7539565	20,99
BCMT090312R-G55	WKP35S	10	●	004	7677465	17,48
BCMT090312R-G55	WSP45G	10	●	004	7539566	18,37
BCMT090316R-G55	WKP35G	10	●	004	7539567	20,99
BCMT090316R-G55	WKP35S	10	●	004	7677466	17,48
BCMT090316R-G55	WSM45X	10	●	004	8112699	22,22
BCMT090316R-G55	WSP45G	10	●	004	7539568	18,37
BCMT090320R-G55	WKP35G	10	●	004	7539569	20,99
BCMT090320R-G55	WKP35S	10	●	004	7677467	17,48
BCMT090320R-G55	WSM45X	10	●	004	8112740	22,22
BCMT090320R-G55	WSP45G	10	●	004	7539570	18,37
BCMT120404R-G55	WKP35G	10	●	004	7539590	22,70
BCMT120404R-G55	WKP35S	10	●	004	7677389	18,92
BCMT120404R-G55	WSP45G	10	●	004	7924209	19,87
BCMT120408R-F55	WAK15	10	●	004	7539592	18,92
BCMT120408R-F55	WKK25G	10	●	004	8284923	19,87
BCMT120408R-F55	WKK25S	10	■	004	7539593*	19,87
BCMT120408R-F55	WKP25S	10	●	004	7539594	18,92
BCMT120408R-F55	WKP35G	10	●	004	7539595	22,70
BCMT120408R-F55	WKP35S	10	●	004	7677490	18,92
BCMT120408R-F55	WSP45G	10	●	004	8112845	19,87
BCMT120408R-G55	WAK15	10	●	004	7539597	18,92
BCMT120408R-G55	WKK25G	10	●	004	8284925	19,87
BCMT120408R-G55	WKK25S	10	■	004	7539599*	19,87
BCMT120408R-G55	WKP25S	10	●	004	7539598	18,92
BCMT120408R-G55	WKP35G	10	●	004	7539600	22,70
BCMT120408R-G55	WKP35S	10	●	004	7677491	18,92
BCMT120408R-G55	WSM35G	10	●	004	8284981	19,87
BCMT120408R-G55	WSM35S	10	■	004	7539601*	19,87
BCMT120408R-G55	WSM45X	10	●	004	7539603	24,05
BCMT120408R-G55	WSP45G	10	●	004	7924210	19,87
BCMT120408R-K55	WKP35G	10	●	004	7539604	22,70
BCMT120408R-K55	WKP35S	10	●	004	7677492	18,92
BCMT120408R-K55	WSM35G	10	●	004	8284982	19,87
BCMT120408R-K55	WSM35S	10	■	004	7539605*	19,87
BCMT120408R-K55	WSP45G	10	●	004	7924211	19,87
BCMT120412R-G55	WKP35G	10	●	004	7539607	22,70
BCMT120412R-G55	WKP35S	10	●	004	7677493	18,92
BCMT120412R-G55	WSM45X	10	●	004	8112744	24,05
BCMT120412R-G55	WSP45G	10	●	004	7924212	19,87
BCMT120416R-G55	WKP35G	10	●	004	7539609	22,70
BCMT120416R-G55	WKP35S	10	●	004	7677494	18,92
BCMT120416R-G55	WSM45X	10	●	004	8112745	24,05
BCMT120416R-G55	WSP45G	10	●	004	7924213	19,87
BCMT120420R-G55	WKP35G	10	●	004	7539611	22,70
BCMT120420R-G55	WKP35S	10	●	004	7677495	18,92
BCMT120420R-G55	WSM45X	10	●	004	8112746	24,05
BCMT120420R-G55	WSP45G	10	●	004	7924214	19,87
BCMT120425R-G55	WKP35G	10	●	004	7539613	22,70
BCMT120425R-G55	WKP35S	10	●	004	7677496	18,92
BCMT120425R-G55	WSP45G	10	●	004	8112846	19,87
BCMT120430R-G55	WKP35G	10	●	004	7539615	22,70
BCMT120430R-G55	WKP35S	10	●	004	7677497	18,92
BCMT120430R-G55	WSM45X	10	●	004	8112747	24,05
BCMT120430R-G55	WSP45G	10	●	004	7924215	19,87
BCMT120432R-G55	WKP35G	10	●	004	7539617	22,70
BCMT120432R-G55	WKP35S	10	●	004	7677498	18,92
BCMT120432R-G55	WSP45G	10	●	004	7924216	19,87
BCMT120440R-G55	WKP35G	10	●	004	7539619	22,70
BCMT120440R-G55	WKP35S	10	●	004	7677499	18,92
BCMT120440R-G55	WSM45X	10	●	004	8112748	24,05
BCMT120440R-G55	WSP45G	10	●	004	7924217	19,87
BCMT160508R-F55	WAK15	10	●	004	7539643	21,74
BCMT160508R-F55	WKK25G	10	●	004	8284920	22,83
BCMT160508R-F55	WKK25S	10	■	004	7539644*	22,83

Bezeichnung / Designation	Sorte / Grade	VE / US		Disc. Gr.	Article No.	EURO Stück / piece
BCMT160508R-F55	WKP25S	10	●	004	7539645	21,74
BCMT160508R-F55	WKP35G	10	●	004	7539646	26,10
BCMT160508R-F55	WKP35S	10	●	004	7677512	21,74
BCMT160508R-F55	WSM45X	10	●	004	8112756	27,60
BCMT160508R-F55	WSP45G	10	●	004	8112847	22,83
BCMT160508R-G55	WAK15	10	●	004	7539648	21,74
BCMT160508R-G55	WKK25G	10	●	004	8284924	22,83
BCMT160508R-G55	WKK25S	10	■	004	7539650*	22,83
BCMT160508R-G55	WKP25S	10	●	004	7539649	21,74
BCMT160508R-G55	WKP35G	10	●	004	7539651	26,10
BCMT160508R-G55	WKP35S	10	●	004	7677513	21,74
BCMT160508R-G55	WSM35G	10	●	004	8284983	22,83
BCMT160508R-G55	WSM35S	10	■	004	7539652*	22,83
BCMT160508R-G55	WSM45X	10	●	004	8112757	27,60
BCMT160508R-G55	WSP45G	10	●	004	7924218	22,83
BCMT160508R-K55	WKP35G	10	●	004	7539655	26,10
BCMT160508R-K55	WKP35S	10	●	004	7677514	21,74
BCMT160508R-K55	WSM35G	10	●	004	8284984	22,83
BCMT160508R-K55	WSM35S	10	■	004	7539656*	22,83
BCMT160508R-K55	WSM45X	10	●	004	8112758	27,60
BCMT160508R-K55	WSP45G	10	●	004	7924219	22,83
BCMT160512R-G55	WKP35G	10	●	004	7539658	26,10
BCMT160512R-G55	WKP35S	10	●	004	7677515	21,74
BCMT160512R-G55	WSM45X	10	●	004	8112749	27,60
BCMT160512R-G55	WSP45G	10	●	004	7924220	22,83
BCMT160516R-G55	WKP35G	10	●	004	7539660	26,10
BCMT160516R-G55	WKP35S	10	●	004	7677516	21,74
BCMT160516R-G55	WSM45X	10	●	004	8112750	27,60
BCMT160516R-G55	WSP45G	10	●	004	7924221	22,83
BCMT160520R-G55	WKP35G	10	●	004	7539662	26,10
BCMT160520R-G55	WKP35S	10	●	004	7677517	21,74
BCMT160520R-G55	WSM45X	10	●	004	8112751	27,60
BCMT160520R-G55	WSP45G	10	●	004	7924222	22,83
BCMT160525R-G55	WKP35G	10	●	004	7539664	26,10
BCMT160525R-G55	WKP35S	10	●	004	7677518	21,74
BCMT160525R-G55	WSM45X	10	●	004	8112752	27,60
BCMT160525R-G55	WSP45G	10	●	004	7924223	22,83
BCMT160530R-G55	WKP35G	10	●	004	7539666	26,10
BCMT160530R-G55	WKP35S	10	●	004	7677519	21,74
BCMT160530R-G55	WSM45X	10	●	004	8112753	27,60
BCMT160530R-G55	WSP45G	10	●	004	7924224	22,83
BCMT160532R-G55	WKP35G	10	●	004	7539668	26,10
BCMT160532R-G55	WKP35S	10	●	004	7677520	21,74
BCMT160532R-G55	WSP45G	10	●	004	8112848	22,83
BCMT160540R-G55	WKP35G	10	●	004	7539670	26,10
BCMT160540R-G55	WKP35S	10	●	004	7677521	21,74
BCMT160540R-G55	WSM45X	10	●	004	8112754	27,60
BCMT160540R-G55	WSP45G	10	●	004	7924225	22,83
BCMT160550R-G55	WKP35G	10	●	004	7539672	26,10
BCMT160550R-G55	WKP35S	10	●	004	7677522	21,74
BCMT160550R-G55	WSP45G	10	●	004	7924226	22,83
BCMT160560R-G55	WKP35G	10	●	004	7539674	26,10
BCMT160560R-G55	WKP35S	10	●	004	7677523	21,74
BCMT160560R-G55	WSM45X	10	●	004	8112755	27,60
BCMT160560R-G55	WSP45G	10	●	004	7924227	22,83
C-TK-01		1	●	095	5025749	368,00
C-TK-02		1	●	095	5892594	441,00
C100.40.115		1	●	095	5006217	11,08
C100.40.215		1	●	095	5006426	11,08
C100.40.345		1	●	095	5006220	11,08
C100.40.390		1	●	095	5006223	11,08
C100.40.430		1	●	095	5006226	11,08
C100.40.445		1	●	095	5006225	11,08
C100.40.600		1	●	095	5006448	20,51
C100.40.615A		1	●	095	5006449	20,51
C100.40.615B		1	●	095	5006450	20,51
C100.50.115		1	●	095	5006219	13,86
C100.50.215		1	●	095	5006427	13,86
C100.50.345		1	●	095	5006222	13,86
C100.50.390		1	●	095	5006224	13,86

Bezeichnung / Designation	Sorte / Grade	VE / US		Disc. Gr.	Article No.	EURO Stück / piece
C100.50.430		1	●	095	5006230	13,86
C100.50.445		1	●	095	5006229	13,86
C100.50.600		1	●	095	5006470	22,55
C100.50.615A		1	●	095	5006471	22,55
C100.50.615B		1	●	095	5006472	22,55
C3-390.540-50 030A		1	○	070	6424834	540,00
C3-390B.140-40 030		1	○	070	6419403	323,00
C3-390B.140-40 060		1	●	070	6418720	323,00
C3-390B.140-50 030		1	○	070	6419377	358,00
C3-390B.140-50 060		1	●	070	6417212	358,00
C3-390B.55-40 030		1	●	070	6424599	343,00
C3-390B.55-40 060		1	●	070	6424470	343,00
C3-390B.555-40 030		1	○	070	6426219	486,00
C3-390B.558-50 040		1	○	070	6426215	540,00
C3-390B.58-50 040		1	●	070	6424597	358,00
C3-390B.58-50 070		1	●	070	6424432	358,00
C3-391.01-32 035		1	○	070	5040085	338,00
C3-391.01-32 060A		1	●	070	5017233	338,00
C3-391.01-32 080A		1	●	070	5017234	338,00
C3-391.14-20 045		1	●	070	5040063	354,00
C3-391.14-20 050		1	●	070	5043636	354,00
C3-391.20-06 045A		1	○	070	5017240	323,00
C3-391.20-08 045A		1	○	070	5017241	323,00
C3-391.20-10 050		1	○	070	5017242	323,00
C3-391.20-12 055		1	●	070	5017243	323,00
C3-391.27-16 056		1	○	070	5017213	323,00
C3-391.27-20 060		1	○	070	5017214	323,00
C3-A390B.45-40 030		1	●	070	6728025	329,00
C3-A390B.45-40 060		1	●	070	6728026	329,00
C3-A390B.45-50 030		1	●	070	6728015	358,00
C3-A390B.45-50 060		1	●	070	6728016	358,00
C3-CP-01		1	○	095	5045220	44,40
C3-LC2030-00060M		1	●	070	5017198	1.424,00
C3-LC2030-41020M		1	●	070	5017194	1.424,00
C3-LC2030-41030M		1	■	070	5017196*	1.424,00
C3-LC2085-4038M		1	■	070	5017200*	981,00
C3-LC2090-19039M		1	●	070	5017210	1.281,00
C3-MAS-01		1	○	095	5045218	873,00
C3-MAS-11		1	○	095	5045219	852,00
C3-MSS-E20L00		1	●	065	5017190	372,00
C3-MSS-E20R00		1	●	065	5017191	372,00
C3-NC2000-08018-32		1	●	070	5017202	981,00
C3-NTS-SEL22040-16		1	○	065	5015091	255,00
C3-NTS-SER22040-16		1	●	065	5017055	255,00
C3-PCLNL-17090-12		1	●	065	5017106	326,00
C3-PCLNL-22040-12		1	●	065	5017062	234,00
C3-PCLNR-17090-12		1	●	065	5017107	326,00
C3-PCLNR-22040-12		1	●	065	5017063	234,00
C3-PDJNL-22045-11		1	●	065	5017064	234,00
C3-PDJNR-22045-11		1	●	065	5017065	234,00
C3-PDUNL-17090-11		1	●	065	5017112	326,00
C3-PDUNR-17090-11		1	●	065	5017113	326,00
C3-PWLNL-13075-06		1	●	065	5017128	326,00
C3-PWLNL-17090-08		1	●	065	5017132	326,00
C3-PWLNL-22040-06		1	●	065	5017074	234,00
C3-PWLNR-13075-06		1	●	065	5017129	326,00
C3-PWLNR-17090-08		1	●	065	5017133	326,00
C3-PWLNR-22040-06		1	●	065	5013480	234,00
C3-RC2030-00060M		1	●	070	5017199	1.424,00
C3-RC2030-41020M		1	●	070	5017195	1.424,00
C3-RC2030-41030M		1	■	070	5017197*	1.424,00
C3-RC2085-4038M		1	●	070	5017201	981,00
C3-RC2090-19039M		1	■	070	5017211*	1.281,00
C3-SCLCL-11065-09		1	●	065	5017138	326,00
C3-SCLCL-17090-09		1	●	065	5204767	326,00
C3-SCLCL-22040-09		1	●	065	5335905	234,00
C3-SCLCR-11065-09		1	●	065	5017139	326,00
C3-SCLCR-17090-09		1	●	065	5204768	326,00
C3-SCLCR-22040-09		1	●	065	5335906	234,00
C3-SDJCL-22040-07		1	●	065	5017079	234,00

Bezeichnung / Designation	Sorte / Grade	VE / US		Disc. Gr.	Article No.	EURO Stück / piece
C3-SDJCL-22040-11		1	●	065	5335975	234,00
C3-SDJCR-22040-07		1	●	065	5017080	234,00
C3-SDJCR-22040-11		1	●	065	5335976	234,00
C3-SDNCN-00040-11		1	●	065	5335983	234,00
C3-SDUCL-11065-07		1	●	065	5017150	326,00
C3-SDUCL-13075-11		1	●	065	5204795	326,00
C3-SDUCL-17090-11		1	●	065	5204797	326,00
C3-SDUCR-11065-07		1	●	065	5017151	326,00
C3-SDUCR-13075-11		1	●	065	5204796	326,00
C3-SDUCR-17090-11		1	●	065	5204798	326,00
C3-SRDCN-00040-08		1	●	065	5017085	234,00
C3-SVHBL-22040-11		1	●	065	5336089	281,00
C3-SVHBR-22040-11		1	●	065	5336100	281,00
C3-SVJBL-22040-11		1	●	065	5336113	281,00
C3-SVJBR-22040-11		1	●	065	5336114	281,00
C3-SVQBL-13070-11		1	●	065	5205499	394,00
C3-SVQBR-13070-11		1	●	065	5205520	394,00
C3-SVVBN-00040-11		1	■	065	5336126*	280,00
C3-WDT-01M		1	○	095	5045223	136,00
C330.06.010		1	●	075	5006464	35,20
C330.06.020		1	●	075	5006465	35,20
C330.06.030		1	●	075	5006466	28,10
C330.06.040		1	●	075	5006467	28,10
C330.06.050		1	●	075	5006468	28,10
C330.06.060		1	●	075	5006469	28,10
C330.10.010		1	●	075	5006393	37,20
C330.10.020		1	●	075	5006394	37,20
C330.10.030		1	●	075	5006395	29,80
C330.10.040		1	●	075	5006396	29,80
C330.10.050		1	●	075	5006397	29,80
C330.10.060		1	●	075	5006398	29,80
C330.10.070		1	●	075	5006399	29,80
C330.10.080		1	●	075	5006400	29,80
C330.10.090		1	●	075	5006401	29,80
C330.10.100		1	●	075	5006402	29,80
C330.13.010		1	●	075	5040670	38,80
C330.13.020		1	●	075	5040678	38,80
C330.13.030		1	●	075	5040668	31,10
C330.13.040		1	●	075	5040676	31,10
C330.13.050		1	●	075	5040662	31,10
C330.13.060		1	●	075	5040660	31,10
C330.13.070		1	●	075	5040680	31,10
C330.13.080		1	●	075	5040682	31,10
C330.13.090		1	●	075	5040686	31,10
C330.13.100		1	●	075	5040684	31,10
C330.13.110		1	●	075	5040672	31,10
C330.13.120		1	●	075	5040664	31,10
C330.13.130		1	●	075	5040674	31,10
C330.16.020		1	●	075	5033113	40,90
C330.16.030		1	●	075	5033114	32,70
C330.16.040		1	●	075	5034286	32,70
C330.16.050		1	●	075	5034287	32,70
C330.16.060		1	●	075	5034288	32,70
C330.16.070		1	●	075	5034289	32,70
C330.16.080		1	●	075	5034290	32,70
C330.16.090		1	●	075	5034291	32,70
C330.16.100		1	●	075	5034292	32,70
C330.16.110		1	●	075	5034293	32,70
C330.16.120		1	●	075	5034294	32,70
C330.16.130		1	●	075	5034295	32,70
C330.16.140		1	●	075	5034296	32,70
C330.16.150		1	●	075	5034297	32,70
C330.16.160		1	●	075	5034298	32,70
C330.20.020		1	●	075	5035297	43,70
C330.20.030		1	●	075	5035298	35,00
C330.20.040		1	●	075	5035299	35,00
C330.20.050		1	●	075	5035300	35,00
C330.20.060		1	●	075	5035301	35,00
C330.20.070		1	●	075	5035302	35,00
C330.20.080		1	●	075	5035303	35,00

Bezeichnung / Designation	Sorte / Grade	VE / US		Disc. Gr.	Article No.	EURO Stück / piece
C330.20.090		1	●	075	5035304	35,00
C330.20.100		1	●	075	5035305	35,00
C330.20.110		1	●	075	5035306	35,00
C330.20.120		1	●	075	5035307	35,00
C330.20.130		1	●	075	5035308	35,00
C330.20.140		1	●	075	5035309	35,00
C330.20.150		1	●	075	5035310	35,00
C330.20.160		1	●	075	5035311	35,00
C330.20.170		1	●	075	5035312	35,00
C330.20.180		1	●	075	5035313	35,00
C330.20.190		1	●	075	5035314	35,00
C330.20.200		1	●	075	5035315	35,00
C330.26.030		1	●	075	5034299	37,60
C330.26.040		1	●	075	5034300	37,60
C330.26.050		1	●	075	5034301	37,60
C330.26.060		1	●	075	5034302	37,60
C330.26.070		1	●	075	5034303	37,60
C330.26.080		1	●	075	5034304	37,60
C330.26.090		1	●	075	5034305	37,60
C330.26.100		1	●	075	5034306	37,60
C330.26.110		1	●	075	5034307	37,60
C330.26.120		1	●	075	5034308	37,60
C330.26.130		1	●	075	5034309	37,60
C330.26.140		1	●	075	5034310	37,60
C330.26.150		1	●	075	5034311	37,60
C330.26.160		1	●	075	5034312	37,60
C330.26.170		1	●	075	5034313	37,60
C330.26.180		1	●	075	5034314	37,60
C330.26.190		1	●	075	5034315	37,60
C330.26.200		1	●	075	5034316	37,60
C330.26.210		1	●	075	5034317	37,60
C330.26.220		1	●	075	5034318	37,60
C330.26.230		1	●	075	5034319	37,60
C330.26.240		1	●	075	5034320	37,60
C330.26.250		1	●	075	5034321	37,60
C330.26.260		1	●	075	5034322	37,60
C340.11.028		1	●	075	6218030	65,30
C340.11.035		1	●	075	6218033	65,30
C340.11.045		1	●	075	6218034	65,30
C340.11.060		1	●	075	6218035	65,30
C340.20.045		1	●	075	5025809	69,20
C340.20.060		1	●	075	5025835	69,20
C340.20.070		1	●	075	5025833	69,20
C340.20.080		1	●	075	5025837	69,20
C340.20.090		1	●	075	5025840	69,20
C340.20.100		1	●	075	5025841	69,20
C340.25.045		1	●	075	7175224	76,90
C340.25.060		1	●	075	7175225	76,90
C340.25.070		1	●	075	7175226	76,90
C340.25.080		1	●	075	6218036	76,90
C340.25.090		1	●	075	5115613	76,90
C340.25.100		1	●	075	6218039	76,90
C340.25.110		1	●	075	6218050	76,90
C340.25.120		1	●	075	6218051	76,90
C340.25.140		1	●	075	6218052	76,90
C340.25.160		1	●	075	6218053	76,90
C340.32.045		1	●	075	5025845	84,60
C340.32.060		1	●	075	5025846	84,60
C340.32.070		1	●	075	5025839	84,60
C340.32.080		1	●	075	5025843	84,60
C340.32.090		1	●	075	5025836	84,60
C340.32.100		1	●	075	5025844	84,60
C340.32.110		1	●	075	5025838	84,60
C340.32.120		1	●	075	5025842	84,60
C340.32.140		1	●	075	5025816	84,60
C340.32.160		1	●	075	5025834	84,60
C340.40.120		1	●	075	5930992	100,00
C340.40.140		1	●	075	5930993	100,00
C340.40.160		1	●	075	5930995	100,00
C340.40.180		1	●	075	5930996	100,00

Bezeichnung / Designation	Sorte / Grade	VE / US		Disc. Gr.	Article No.	EURO Stück / piece
C340.40.200		1	●	075	5930997	100,00
C340.40.220		1	●	075	5930998	100,00
C4-390.540-50 030A		1	○	070	6424835	571,00
C4-390B.140-40 030		1	○	070	6419405	380,00
C4-390B.140-40 060		1	●	070	6418722	343,00
C4-390B.140-50 030		1	○	070	6419400	380,00
C4-390B.140-50 060		1	●	070	6417467	380,00
C4-390B.540-40 040		1	●	070	6424839	513,00
C4-390B.55-40 030		1	○	070	6424690	343,00
C4-390B.55-40 060		1	●	070	6424471	343,00
C4-390B.555-40 040		1	○	070	6426300	513,00
C4-390B.558-50 040		1	○	070	6426216	571,00
C4-390B.58-50 040		1	●	070	6424598	380,00
C4-390B.58-50 070		1	●	070	6424433	380,00
C4-391.01-40 040		1	●	070	5040086	358,00
C4-391.01-40 060A		1	●	070	5012657	358,00
C4-391.01-40 080A		1	●	070	5012658	358,00
C4-391.02-32 055A		1	●	070	5017235	342,00
C4-391.02-32 070A		1	●	070	5012666	342,00
C4-391.14-20 052		1	●	070	5012458	372,00
C4-391.14-20 057		1	●	070	5043637	372,00
C4-391.14-25 052		1	●	070	5029303	372,00
C4-391.14-25 057		1	●	070	5043638	372,00
C4-391.14-32 054		1	●	070	5040066	372,00
C4-391.14-32 059		1	●	070	5043639	372,00
C4-391.20-06 050		1	●	070	5012619	342,00
C4-391.20-08 050		1	●	070	5012620	342,00
C4-391.20-10 050A		1	●	070	5012621	342,00
C4-391.20-12 055A		1	●	070	5012622	342,00
C4-391.20-14 055		1	●	070	5012623	342,00
C4-391.20-16 055		1	●	070	5012624	342,00
C4-391.27-16 056		1	●	070	5012466	342,00
C4-391.27-20 060		1	●	070	5012467	342,00
C4-391.27-25 077		1	●	070	5012468	342,00
C4-A390B.45-40 030		1	●	070	6728027	343,00
C4-A390B.45-40 060		1	●	070	6728028	343,00
C4-A390B.45-50 030		1	●	070	6728017	380,00
C4-A390B.45-50 060		1	●	070	6728018	380,00
C4-A391.05C-19 025M		1	●	070	7493036	375,00
C4-A391.05C-25 035		1	●	070	7493037	375,00
C4-A391.20-12 055A		1	●	070	5523856	342,00
C4-C-5000		1	○	095	5012441	8,50
C4-CP-01		1	○	095	5012449	44,40
C4-DCLNL-17090-12		1	●	065	5522781	326,00
C4-DCLNL-27050-12		1	●	065	5042273	234,00
C4-DCLNL-27050-12-P		1	●	065	6824158	381,00
C4-DCLNL-27055-16		1	●	065	5042274	234,00
C4-DCLNR-17090-12		1	●	065	5522820	326,00
C4-DCLNR-27050-12		1	●	065	5041184	234,00
C4-DCLNR-27050-12-P		1	●	065	6824159	381,00
C4-DCLNR-27055-16		1	●	065	5042275	234,00
C4-DDJCL-27050-11-P		1	●	065	7512343	381,00
C4-DDJCR-27050-11-P		1	●	065	7512344	381,00
C4-DDJNL-27050-11		1	●	065	5042338	234,00
C4-DDJNL-27055-11-P		1	●	065	6824240	381,00
C4-DDJNL-27055-15		1	●	065	5042340	234,00
C4-DDJNL-27055-15-P		1	●	065	7050825	381,00
C4-DDJNR-27050-11		1	●	065	5042339	234,00
C4-DDJNR-27055-11-P		1	●	065	6824241	381,00
C4-DDJNR-27055-15		1	●	065	5042341	234,00
C4-DDJNR-27055-15-P		1	●	065	7050824	381,00
C4-DDUNL-17090-11		1	●	065	5522828	326,00
C4-DDUNL-27050-15		1	○	065	5672970	234,00
C4-DDUNL-27080-15		1	●	065	5522853	326,00
C4-DDUNR-17090-11		1	●	065	5522851	326,00
C4-DDUNR-27050-15		1	○	065	5672971	234,00
C4-DDUNR-27080-15		1	●	065	5522854	326,00
C4-DSDNN-00050-12		1	○	065	5672975	234,00
C4-DSKNL-27050-12		1	●	065	5042299	234,00
C4-DSKNR-27050-12		1	●	065	5042300	234,00

Bezeichnung / Designation	Sorte / Grade	VE / US		Disc. Gr.	Article No.	EURO Stück / piece
C4-DSRNL-22050-12		1	●	065	5042301	234,00
C4-DSRNR-22050-12		1	●	065	5042302	234,00
C4-DSSNL-27042-12		1	●	065	5042303	234,00
C4-DSSNL-27045-15		1	●	065	5042305	234,00
C4-DSSNR-27042-12		1	●	065	5042304	234,00
C4-DSSNR-27045-15		1	●	065	5042306	234,00
C4-DTGNL-27050-16-P		1	●	065	6824258	381,00
C4-DTGNR-27050-16-P		1	●	065	6824259	381,00
C4-DVJBL-27062-16-P		1	●	065	7031730	459,00
C4-DVJBR-27062-16-P		1	●	065	7031731	459,00
C4-DVJNL-27062-16		1	●	065	5204642	234,00
C4-DVJNL-27062-16-P		1	●	065	7512207	381,00
C4-DVJNR-27062-16		1	●	065	5204643	234,00
C4-DVJNR-27062-16-P		1	●	065	7512208	381,00
C4-DWLNL-13075-06		1	●	065	5522880	326,00
C4-DWLNL-17090-08		1	●	065	5522882	326,00
C4-DWLNL-27050-06		1	●	065	5042288	234,00
C4-DWLNL-27050-08		1	●	065	5042290	234,00
C4-DWLNL-27050-08-P		1	●	065	6824287	381,00
C4-DWLNR-13075-06		1	●	065	5522881	326,00
C4-DWLNR-17090-08		1	●	065	5522884	326,00
C4-DWLNR-27050-06		1	●	065	5042289	234,00
C4-DWLNR-27050-08		1	●	065	5042291	234,00
C4-DWLNR-27050-08-P		1	●	065	6824288	381,00
C4-LC2040-00075M		1	●	070	5012393	1.424,00
C4-LC2040-51030M		1	■	070	5012373*	1.424,00
C4-LC2040-51040M		1	●	070	5012375	1.424,00
C4-LC2080-59110A		1	■	070	5012417*	1.281,00
C4-LC2085-5048		1	●	070	5012405	981,00
C4-LC2090-24043A		1	●	070	5012433	1.281,00
C4-MAS-01		1	○	095	5045215	873,00
C4-MAS-11		1	○	095	5045212	852,00
C4-MSS-E25L00		1	●	065	5012141	372,00
C4-MSS-E25L90		1	●	065	5012145	372,00
C4-MSS-E25R00		1	●	065	5012140	372,00
C4-MSS-E25R90		1	●	065	5012144	372,00
C4-MTJNL-27050-16		1	●	065	5012005	234,00
C4-MTJNL-27050-22		1	●	065	5012009	234,00
C4-MTJNR-27050-16		1	●	065	5012004	234,00
C4-MTJNR-27050-22		1	●	065	5012008	234,00
C4-NC2000-10020-40		1	●	070	5012408	981,00
C4-NC2000-12020-50		1	●	070	5012409	981,00
C4-NTS-SEL27050-16		1	○	065	5011577	255,00
C4-NTS-SEL27050-22		1	○	065	5011583	255,00
C4-NTS-SER27050-16		1	●	065	5011576	255,00
C4-NTS-SER27050-22		1	●	065	5011582	255,00
C4-NTS-SIL22090-16		1	○	065	5011627	353,00
C4-NTS-SIL22090-22		1	■	065	5011639*	353,00
C4-NTS-SIL27080-16		1	○	065	5011629	353,00
C4-NTS-SIL27080-22		1	■	065	5011641*	353,00
C4-NTS-SIR22090-16		1	●	065	5011626	353,00
C4-NTS-SIR22090-22		1	■	065	5011638*	353,00
C4-NTS-SIR27080-16		1	●	065	5011628	353,00
C4-NTS-SIR27080-22		1	■	065	5011640*	353,00
C4-PCLNL-17090-12		1	●	065	5011685	326,00
C4-PCLNL-22110-12		1	●	065	5011687	326,00
C4-PCLNL-27050-12		1	●	065	5011919	234,00
C4-PCLNL-27050-16		1	●	065	5011925	234,00
C4-PCLNL-27080-12		1	●	065	5011689	326,00
C4-PCLNL-27120-12		1	●	065	5011691	326,00
C4-PCLNR-17090-12		1	●	065	5011684	326,00
C4-PCLNR-22110-12		1	●	065	5011686	326,00
C4-PCLNR-27050-12		1	●	065	5011918	234,00
C4-PCLNR-27050-16		1	●	065	5011924	234,00
C4-PCLNR-27080-12		1	●	065	5011688	326,00
C4-PCLNR-27120-12		1	●	065	5011690	326,00
C4-PDJNL-27050-11		1	●	065	5011935	234,00
C4-PDJNL-27050-15		1	●	065	5011941	234,00
C4-PDJNR-27050-11		1	●	065	5011934	234,00
C4-PDJNR-27050-15		1	●	065	5011940	234,00

Bezeichnung / Designation	Sorte / Grade	VE / US		Disc. Gr.	Article No.	EURO Stück / piece
C4-PDUNL-17090-11		1	●	065	5011711	326,00
C4-PDUNL-22110-11		1	●	065	5011713	326,00
C4-PDUNL-27080-15		1	●	065	5011720	326,00
C4-PDUNL-27120-15		1	●	065	5011722	326,00
C4-PDUNR-17090-11		1	●	065	5011710	326,00
C4-PDUNR-22110-11		1	●	065	5011712	326,00
C4-PDUNR-27080-15		1	●	065	5011719	326,00
C4-PDUNR-27120-15		1	●	065	5011721	326,00
C4-PTFNL-17090-16W		1	●	065	5011758	326,00
C4-PTFNL-22110-16W		1	●	065	5011760	326,00
C4-PTFNR-17090-16W		1	●	065	5011757	326,00
C4-PTFNR-22110-16W		1	●	065	5011759	326,00
C4-PWLNL-13075-06		1	●	065	5011784	326,00
C4-PWLNL-17090-06		1	●	065	5011786	326,00
C4-PWLNL-17090-08		1	●	065	5011788	326,00
C4-PWLNL-22110-08		1	●	065	5011790	326,00
C4-PWLNL-27050-06		1	●	065	5011997	234,00
C4-PWLNL-27050-08		1	●	065	5011999	234,00
C4-PWLNL-27120-08		1	●	065	5011792	326,00
C4-PWLNR-13075-06		1	●	065	5011783	326,00
C4-PWLNR-17090-06		1	●	065	5011785	326,00
C4-PWLNR-17090-08		1	●	065	5011787	326,00
C4-PWLNR-22110-08		1	●	065	5011789	326,00
C4-PWLNR-27050-06		1	●	065	5011996	234,00
C4-PWLNR-27050-08		1	●	065	5011998	234,00
C4-PWLNR-27120-08		1	●	065	5011791	326,00
C4-RC2040-00075M		1	●	070	5012392	1.424,00
C4-RC2040-51030M		1	●	070	5012372	1.424,00
C4-RC2040-51040M		1	■	070	5012374*	1.424,00
C4-RC2050-00065M		1	●	070	5012396	1.424,00
C4-RC2085-5048		1	●	070	5012404	981,00
C4-RC2090-24043A		1	●	070	5012432	1.281,00
C4-SCLCL-11070-09		1	●	065	5011807	326,00
C4-SCLCL-13080-09		1	●	065	5204769	326,00
C4-SCLCL-17090-09		1	●	065	5204771	326,00
C4-SCLCL-17090-12		1	●	065	5204783	326,00
C4-SCLCL-27050-09		1	●	065	5335907	234,00
C4-SCLCL-27050-12		1	●	065	5335955	234,00
C4-SCLCR-11070-09		1	●	065	5011806	326,00
C4-SCLCR-13080-09		1	●	065	5204770	326,00
C4-SCLCR-17090-09		1	●	065	5204772	326,00
C4-SCLCR-17090-12		1	●	065	5204784	326,00
C4-SCLCR-27050-09		1	●	065	5335908	234,00
C4-SCLCR-27050-12		1	●	065	5335956	234,00
C4-SDJCL-27050-07		1	●	065	5012047	234,00
C4-SDJCL-27050-11		1	●	065	5335977	234,00
C4-SDJCR-27050-07		1	●	065	5012046	234,00
C4-SDJCR-27050-11		1	●	065	5335978	234,00
C4-SDNCN-00050-11		1	●	065	5335984	234,00
C4-SDUCL-11070-07		1	●	065	5011837	326,00
C4-SDUCL-13080-11		1	●	065	5204799	326,00
C4-SDUCL-17090-11		1	●	065	5204801	326,00
C4-SDUCL-22110-11		1	●	065	5204803	326,00
C4-SDUCL-27080-11		1	●	065	5204805	326,00
C4-SDUCR-11070-07		1	●	065	5011836	326,00
C4-SDUCR-13080-11		1	●	065	5204800	326,00
C4-SDUCR-17090-11		1	●	065	5204802	326,00
C4-SDUCR-22110-11		1	●	065	5204804	326,00
C4-SDUCR-27080-11		1	●	065	5204806	326,00
C4-SRDCN-00050-06		1	●	065	5012048	234,00
C4-SRDCN-00050-08		1	●	065	5012050	234,00
C4-SRDCN-00050-10		1	●	065	5335993	234,00
C4-SRDCN-00050-12		1	●	065	5335996	234,00
C4-SRSCL-27050-06		1	●	065	5012053	234,00
C4-SRSCL-27050-08		1	●	065	5012057	234,00
C4-SRSCL-27050-10		1	●	065	5336017	234,00
C4-SRSCL-27050-12		1	●	065	5336044	234,00
C4-SRSCR-27050-06		1	●	065	5012052	234,00
C4-SRSCR-27050-08		1	●	065	5012056	234,00
C4-SRSCR-27050-10		1	●	065	5336018	234,00

Bezeichnung / Designation	Sorte / Grade	VE / US		Disc. Gr.	Article No.	EURO Stück / piece
C4-SRSCR-27050-12		1	●	065	5336045	**234,00**
C4-STFCL-11070-11		1	●	065	5011873	**326,00**
C4-STFCL-17090-16		1	●	065	5204813	**326,00**
C4-STFCL-22110-16		1	●	065	5204815	**326,00**
C4-STFCR-11070-11		1	●	065	5011872	**326,00**
C4-STFCR-17090-16		1	●	065	5204814	**326,00**
C4-STFCR-22110-16		1	●	065	5204816	**326,00**
C4-STGCL-27050-11		1	●	065	5012089	**234,00**
C4-STGCL-27050-16		1	●	065	5336082	**234,00**
C4-STGCR-27050-11		1	●	065	5012088	**234,00**
C4-STGCR-27050-16		1	●	065	5336083	**234,00**
C4-SVHBL-27050-11		1	●	065	5336101	**281,00**
C4-SVHBL-27050-16		1	●	065	5336104	**281,00**
C4-SVHBR-27050-11		1	●	065	5336103	**281,00**
C4-SVHBR-27050-16		1	●	065	5336105	**281,00**
C4-SVJBL-27050-11		1	●	065	5336115	**281,00**
C4-SVJBL-27050-16		1	●	065	5336118	**281,00**
C4-SVJBR-27050-11		1	●	065	5336117	**281,00**
C4-SVJBR-27050-16		1	●	065	5336119	**281,00**
C4-SVQBL-13070-11		1	●	065	5205523	**394,00**
C4-SVQBL-15080-11		1	●	065	5205525	**394,00**
C4-SVQBL-18090-16		1	●	065	5011914	**394,00**
C4-SVQBL-22110-16		1	●	065	5205545	**394,00**
C4-SVQBL-27080-16		1	●	065	5205547	**394,00**
C4-SVQBL-27120-16		1	●	065	5205549	**394,00**
C4-SVQBR-13070-11		1	●	065	5205524	**394,00**
C4-SVQBR-15080-11		1	●	065	5205526	**394,00**
C4-SVQBR-18090-16		1	●	065	5011913	**394,00**
C4-SVQBR-22110-16		1	●	065	5205546	**394,00**
C4-SVQBR-27080-16		1	●	065	5205548	**394,00**
C4-SVQBR-27120-16		1	●	065	5205560	**394,00**
C4-SVVBN-00050-11		1	●	065	5336128	**281,00**
C4-SVVBN-00050-16		1	●	065	5336129	**281,00**
C4-WDT-01M		1	○	095	5012446	**134,00**
C5-390.540-50 030A		1	○	070	6424836	**600,00**
C5-390B.140-40 040		1	●	070	6418725	**358,00**
C5-390B.140-40 080		1	●	070	6418726	**358,00**
C5-390B.140-50 030		1	●	070	6418704	**402,00**
C5-390B.140-50 070		1	●	070	6418705	**402,00**
C5-390B.540-40 050		1	●	070	6424832	**540,00**
C5-390B.55-40 050		1	●	070	6424472	**358,00**
C5-390B.55-40 090		1	●	070	6424474	**358,00**
C5-390B.555-40 050		1	●	070	6425675	**540,00**
C5-390B.558-50 040		1	○	070	6426217	**600,00**
C5-390B.58-50 040		1	●	070	6424434	**402,00**
C5-390B.58-50 080		1	●	070	6424435	**402,00**
C5-391.01-50 050		1	●	070	5040087	**375,00**
C5-391.01-50 080A		1	●	070	5012659	**375,00**
C5-391.01-50 100A		1	●	070	5012660	**375,00**
C5-391.02-32 033A		1	●	070	5040080	**360,00**
C5-391.02-32 060A		1	●	070	5017236	**360,00**
C5-391.02-40 040A		1	●	070	5040081	**360,00**
C5-391.02-40 065A		1	●	070	5012663	**360,00**
C5-391.02-40 085A		1	●	070	5012667	**360,00**
C5-391.14-20 055		1	●	070	5040067	**391,00**
C5-391.14-20 060		1	●	070	5043640	**391,00**
C5-391.14-25 055		1	●	070	5029304	**391,00**
C5-391.14-25 060		1	●	070	5043641	**391,00**
C5-391.14-32 057		1	●	070	5040069	**391,00**
C5-391.14-32 062		1	●	070	5043642	**391,00**
C5-391.15-25 075		1	○	070	5012460	**391,00**
C5-391.20-06 050		1	●	070	5012625	**360,00**
C5-391.20-08 050		1	●	070	5012626	**360,00**
C5-391.20-10 055		1	●	070	5012627	**360,00**
C5-391.20-12 060		1	●	070	5012628	**360,00**
C5-391.20-14 060		1	●	070	5012629	**360,00**
C5-391.20-16 060		1	●	070	5012630	**360,00**
C5-391.20-18 060		1	●	070	5012631	**360,00**
C5-391.20-20 060		1	●	070	5012632	**360,00**
C5-391.20-25 080		1	●	070	5012633	**360,00**

Bezeichnung / Designation	Sorte / Grade	VE / US		Disc. Gr.	Article No.	EURO Stück / piece
C5-391.27-16 065		1	●	070	5012469	**360,00**
C5-391.27-20 060		1	●	070	5012470	**360,00**
C5-391.27-25 071		1	●	070	5036527	**360,00**
C5-391.27-32 075		1	●	070	5012472	**360,00**
C5-A390B.45-40 040		1	●	070	6728029	**358,00**
C5-A390B.45-40 080		1	●	070	6728030	**358,00**
C5-A390B.45-50 030		1	●	070	6728019	**402,00**
C5-A390B.45-50 070		1	●	070	6728020	**402,00**
C5-A391.05C-19 025M		1	●	070	7493038	**395,00**
C5-A391.05C-25 025M		1	●	070	7493039	**395,00**
C5-A391.20-15 060A		1	●	070	5523857	**360,00**
C5-ASHR3-36123-20		1	○	070	5097411	**1.040,00**
C5-C-5000		1	○	095	5012442	**9,56**
C5-CP-01		1	○	095	5012450	**48,50**
C5-DCLNL-17090-12		1	●	065	5522821	**362,00**
C5-DCLNL-35060-12		1	●	065	5042276	**260,00**
C5-DCLNL-35060-12-P		1	●	065	6824180	**423,00**
C5-DCLNL-35060-16		1	●	065	5042278	**260,00**
C5-DCLNL-35060-16-P		1	●	065	7512203	**423,00**
C5-DCLNL-35060-19		1	●	065	5042280	**260,00**
C5-DCLNR-17090-12		1	●	065	5522822	**362,00**
C5-DCLNR-35060-12		1	●	065	5042277	**260,00**
C5-DCLNR-35060-12-P		1	●	065	6824181	**423,00**
C5-DCLNR-35060-16		1	●	065	5042279	**260,00**
C5-DCLNR-35060-16-P		1	●	065	7512204	**423,00**
C5-DCLNR-35060-19		1	●	065	5042281	**260,00**
C5-DCMNN-00105-12		1	●	065	5325910	**364,00**
C5-DDJCL-35060-11-P		1	●	065	7512345	**423,00**
C5-DDJCR-35060-11-P		1	●	065	7512346	**423,00**
C5-DDJNL-35060-11		1	●	065	5042342	**260,00**
C5-DDJNL-35060-15		1	●	065	5042344	**260,00**
C5-DDJNL-35060-15-P		1	●	065	6824242	**423,00**
C5-DDJNR-35060-11		1	●	065	5042343	**260,00**
C5-DDJNR-35060-15		1	●	065	5042345	**260,00**
C5-DDJNR-35060-15-P		1	●	065	6824243	**423,00**
C5-DDMNL-00115-15		1	●	065	5325911	**364,00**
C5-DDUNL-17090-11		1	●	065	5522782	**362,00**
C5-DDUNL-27140-15		1	●	065	5522855	**362,00**
C5-DDUNL-35060-15		1	●	065	5672972	**260,00**
C5-DDUNR-17090-11		1	●	065	5522783	**362,00**
C5-DDUNR-27140-15		1	●	065	5522856	**362,00**
C5-DDUNR-35060-15		1	●	065	5672973	**260,00**
C5-DSDNN-00060-12		1	○	065	5672974	**260,00**
C5-DSKNL-35060-12		1	●	065	5042307	**260,00**
C5-DSKNL-35060-15		1	●	065	5042309	**260,00**
C5-DSKNR-35060-12		1	●	065	5042308	**260,00**
C5-DSKNR-35060-15		1	●	065	5042310	**260,00**
C5-DSRNL-27060-12		1	●	065	5042311	**260,00**
C5-DSRNL-27060-15		1	●	065	5042313	**260,00**
C5-DSRNR-27060-12		1	●	065	5042312	**260,00**
C5-DSRNR-27060-15		1	●	065	5042575	**260,00**
C5-DSSNL-35050-15		1	●	065	5042316	**260,00**
C5-DSSNL-35052-12		1	●	065	5042318	**260,00**
C5-DSSNR-35050-15		1	●	065	5042317	**260,00**
C5-DSSNR-35052-12		1	●	065	5042319	**260,00**
C5-DVJBL-35065-16-P		1	●	065	7031732	**510,00**
C5-DVJBR-35065-16-P		1	●	065	7031733	**510,00**
C5-DVJNL-35065-16		1	●	065	5204644	**260,00**
C5-DVJNL-35065-16-P		1	●	065	7512209	**423,00**
C5-DVJNR-35065-16		1	●	065	5204645	**260,00**
C5-DVJNR-35065-16-P		1	●	065	7512340	**423,00**
C5-DWLNL-17090-08		1	●	065	5522885	**362,00**
C5-DWLNL-35060-06		1	■	065	5042292*	**260,00**
C5-DWLNL-35060-08		1	●	065	5042294	**260,00**
C5-DWLNL-35060-08-P		1	●	065	6824289	**423,00**
C5-DWLNL-35060-10		1	●	065	5043649	**260,00**
C5-DWLNR-17090-08		1	●	065	5522886	**362,00**
C5-DWLNR-35060-06		1	■	065	5042293*	**260,00**
C5-DWLNR-35060-08		1	●	065	5042295	**260,00**
C5-DWLNR-35060-08-P		1	●	065	6824290	**423,00**

Bezeichnung / Designation	Sorte / Grade	VE / US		Disc. Gr.	Article No.	EURO Stück / piece
C5-DWLNR-35060-10		1	●	065	5043650	260,00
C5-LC2040-00085M		1	●	070	5012395	1.582,00
C5-LC2040-53030M		1	■	070	5012377*	1.582,00
C5-LC2040-53040M		1	●	070	5012379	1.582,00
C5-LC2050-00085M		1	●	070	5012399	1.582,00
C5-LC2050-53030M		1	■	070	5012385*	1.582,00
C5-LC2050-53040M		1	●	070	5012387	1.582,00
C5-LC2060-43040M		1	●	070	5012389	1.582,00
C5-LC2085-6464		1	■	070	5012407*	1.083,00
C5-LC2090-32048A		1	■	070	5012435*	1.419,00
C5-MAS-01		1	○	095	5045216	968,00
C5-MAS-11		1	○	095	5045213	944,00
C5-MSS-E25L00		1	●	065	5012143	411,00
C5-MSS-E25L90		1	●	065	5012147	411,00
C5-MSS-E25R00		1	●	065	5012142	411,00
C5-MSS-E25R90		1	●	065	5012146	411,00
C5-MTJNL-35060-16		1	●	065	5012007	260,00
C5-MTJNL-35060-22		1	●	065	5012011	260,00
C5-MTJNR-35060-16		1	●	065	5012006	260,00
C5-MTJNR-35060-22		1	●	065	5012010	260,00
C5-NC2000-12024-50		1	●	070	5012410	1.083,00
C5-NC2000-14024-60		1	●	070	5012411	1.083,00
C5-NTS-SEL35060-16		1	○	065	5011579	278,00
C5-NTS-SEL35060-22		1	○	065	5011585	278,00
C5-NTS-SER35060-16		1	●	065	5011578	278,00
C5-NTS-SER35060-22		1	●	065	5011584	278,00
C5-NTS-SIL22090-16		1	○	065	5011631	394,00
C5-NTS-SIL22090-22		1	■	065	5011643*	394,00
C5-NTS-SIL27105-16		1	○	065	5011633	394,00
C5-NTS-SIL27105-22		1	○	065	5011645	394,00
C5-NTS-SIR22090-16		1	●	065	5011630	394,00
C5-NTS-SIR22090-22		1	■	065	5011642*	394,00
C5-NTS-SIR27105-16		1	●	065	5011632	394,00
C5-NTS-SIR27105-22		1	●	065	5011644	394,00
C5-PCLNL-17090-12		1	●	065	5011693	362,00
C5-PCLNL-22110-12		1	●	065	5011695	362,00
C5-PCLNL-27140-12		1	●	065	5011697	362,00
C5-PCLNL-35060-12		1	●	065	5011921	260,00
C5-PCLNL-35060-16		1	●	065	5011927	260,00
C5-PCLNL-35100-12		1	●	065	5011699	362,00
C5-PCLNL-35150-16		1	●	065	5011705	362,00
C5-PCLNR-17090-12		1	●	065	5011692	362,00
C5-PCLNR-22110-12		1	●	065	5011694	362,00
C5-PCLNR-27140-12		1	●	065	5011696	362,00
C5-PCLNR-35060-12		1	●	065	5011920	260,00
C5-PCLNR-35060-16		1	●	065	5011926	260,00
C5-PCLNR-35100-12		1	●	065	5011698	362,00
C5-PCLNR-35150-16		1	●	065	5011704	362,00
C5-PDJNL-35060-11		1	●	065	5011937	260,00
C5-PDJNL-35060-15		1	●	065	5011943	260,00
C5-PDJNR-35060-11		1	●	065	5011936	260,00
C5-PDJNR-35060-15		1	●	065	5011942	260,00
C5-PDUNL-17090-11		1	●	065	5011715	362,00
C5-PDUNL-22110-11		1	●	065	5011680	362,00
C5-PDUNL-27140-15		1	●	065	5011724	362,00
C5-PDUNL-35100-15		1	●	065	5011726	362,00
C5-PDUNL-35150-15		1	●	065	5011728	362,00
C5-PDUNR-17090-11		1	●	065	5011714	362,00
C5-PDUNR-22110-11		1	●	065	5011716	362,00
C5-PDUNR-27140-15		1	●	065	5011723	362,00
C5-PDUNR-35100-15		1	●	065	5011725	362,00
C5-PDUNR-35150-15		1	●	065	5011727	362,00
C5-PRDCN-00060-16		1	■	065	5012040*	260,00
C5-PRDCN-00060-20		1	■	065	5012044*	260,00
C5-PRSCL-35060-16		1	●	065	5012073	260,00
C5-PRSCL-35060-20		1	●	065	5012081	260,00
C5-PRSCR-35060-16		1	●	065	5012072	260,00
C5-PRSCR-35060-20		1	●	065	5012080	260,00
C5-PSKNL-27140-12		1	●	065	5011746	362,00
C5-PSKNR-27140-12		1	●	065	5011745	362,00

Bezeichnung / Designation	Sorte / Grade	VE / US		Disc. Gr.	Article No.	EURO Stück / piece
C5-PTFNL-17090-16W		1	●	065	5011764	362,00
C5-PTFNL-22110-16W		1	●	065	5011766	362,00
C5-PTFNL-35150-22W		1	●	065	5011778	362,00
C5-PTFNR-17090-16W		1	●	065	5011763	362,00
C5-PTFNR-22110-16W		1	●	065	5011765	362,00
C5-PTFNR-35150-22W		1	●	065	5011777	362,00
C5-PWLNL-17090-08		1	●	065	5011681	362,00
C5-PWLNL-22110-08		1	●	065	5011795	362,00
C5-PWLNL-27140-08		1	●	065	5011797	362,00
C5-PWLNL-35060-08		1	●	065	5011679	260,00
C5-PWLNL-35060-10		1	●	065	5012001	260,00
C5-PWLNR-17090-08		1	●	065	5011793	362,00
C5-PWLNR-22110-08		1	●	065	5011794	362,00
C5-PWLNR-27140-08		1	●	065	5011796	362,00
C5-PWLNR-35060-08		1	●	065	5011917	260,00
C5-PWLNR-35060-10		1	●	065	5012000	260,00
C5-RC2040-00085M		1	●	070	5012394	1.582,00
C5-RC2040-53030M		1	●	070	5012376	1.582,00
C5-RC2040-53040M		1	●	070	5012378	1.582,00
C5-RC2050-00085M		1	●	070	5012398	1.582,00
C5-RC2050-53030M		1	●	070	5012384	1.582,00
C5-RC2050-53040M		1	■	070	5012386*	1.582,00
C5-RC2060-00075M		1	●	070	5012400	1.582,00
C5-RC2060-43040M		1	●	070	5012388	1.582,00
C5-RC2085-6464		1	●	070	5012406	1.083,00
C5-RC2090-32048A		1	●	070	5012434	1.419,00
C5-SCLCL-11070-09		1	●	065	5011809	362,00
C5-SCLCL-13080-09		1	●	065	5204775	362,00
C5-SCLCL-17090-09		1	●	065	5204777	362,00
C5-SCLCL-17090-12		1	●	065	5204789	362,00
C5-SCLCL-22110-12		1	●	065	5204791	362,00
C5-SCLCL-27140-12		1	●	065	5204793	362,00
C5-SCLCL-35060-09		1	●	065	5335909	260,00
C5-SCLCL-35060-12		1	●	065	5335957	260,00
C5-SCLCL-35100-09		1	■	065	5204779*	260,00
C5-SCLCR-11070-09		1	●	065	5011808	362,00
C5-SCLCR-13080-09		1	●	065	5204776	362,00
C5-SCLCR-17090-09		1	●	065	5204778	362,00
C5-SCLCR-17090-12		1	●	065	5204790	362,00
C5-SCLCR-22110-12		1	●	065	5204792	362,00
C5-SCLCR-27140-12		1	●	065	5204794	362,00
C5-SCLCR-35060-09		1	●	065	5335950	260,00
C5-SCLCR-35060-12		1	●	065	5335958	260,00
C5-SCLCR-35100-09		1	■	065	5204780*	362,00
C5-SDJCL-35060-11		1	●	065	5335979	260,00
C5-SDJCR-35060-11		1	●	065	5335980	260,00
C5-SDNCN-00060-11		1	●	065	5335985	260,00
C5-SDUCL-11070-07		1	●	065	5011839	362,00
C5-SDUCL-13080-11		1	●	065	5204807	362,00
C5-SDUCL-17090-11		1	●	065	5204809	362,00
C5-SDUCL-22110-11		1	●	065	5204811	362,00
C5-SDUCR-11070-07		1	●	065	5011838	362,00
C5-SDUCR-13080-11		1	●	065	5204808	362,00
C5-SDUCR-17090-11		1	●	065	5204810	362,00
C5-SDUCR-22110-11		1	●	065	5204812	362,00
C5-SRDCN-00060-06		1	●	065	5012049	260,00
C5-SRDCN-00060-08		1	●	065	5012051	260,00
C5-SRDCN-00060-10		1	●	065	5335994	260,00
C5-SRDCN-00060-12		1	●	065	5335997	260,00
C5-SRDCN-00060-16		1	●	065	5335999	260,00
C5-SRSCL-35060-08		1	●	065	5012059	260,00
C5-SRSCL-35060-10		1	●	065	5336019	260,00
C5-SRSCL-35060-12		1	●	065	5336046	260,00
C5-SRSCR-35060-08		1	●	065	5012058	260,00
C5-SRSCR-35060-10		1	●	065	5336041	260,00
C5-SRSCR-35060-12		1	●	065	5336047	260,00
C5-STFCL-11070-11		1	●	065	5011877	362,00
C5-STFCL-13080-11		1	●	065	5011879	362,00
C5-STFCL-17090-16		1	●	065	5204817	362,00
C5-STFCL-22110-16		1	●	065	5204819	362,00

Bezeichnung / Designation	Sorte / Grade	VE / US		Disc. Gr.	Article No.	EURO Stück / piece
C5-STFCR-11070-11		1	●	065	5011876	**362,00**
C5-STFCR-13080-11		1	●	065	5011878	**362,00**
C5-STFCR-17090-16		1	●	065	5204818	**362,00**
C5-STFCR-22110-16		1	●	065	5204820	**362,00**
C5-STGCL-35060-16		1	●	065	5336084	**260,00**
C5-STGCR-35060-16		1	●	065	5336085	**260,00**
C5-SVHBL-35060-16		1	●	065	5336107	**313,00**
C5-SVHBR-35060-16		1	●	065	5336108	**313,00**
C5-SVJBL-35060-16		1	●	065	5336121	**313,00**
C5-SVJBR-35060-16		1	●	065	5336122	**313,00**
C5-SVMBL-00115-16		1	●	065	5325930	**441,00**
C5-SVQBL-15080-11		1	●	065	5205527	**439,00**
C5-SVQBL-18090-16		1	●	065	5011916	**439,00**
C5-SVQBL-22110-16		1	●	065	5205563	**439,00**
C5-SVQBL-27140-16		1	●	065	5205565	**439,00**
C5-SVQBL-35150-16		1	●	065	5205569	**439,00**
C5-SVQBR-15080-11		1	●	065	5205528	**439,00**
C5-SVQBR-18090-16		1	●	065	5011915	**439,00**
C5-SVQBR-22110-16		1	●	065	5205564	**439,00**
C5-SVQBR-27140-16		1	●	065	5205566	**439,00**
C5-SVQBR-35150-16		1	●	065	5205580	**439,00**
C5-SVVBN-00060-16		1	●	065	5336140	**313,00**
C5-WDT-01M		1	○	095	5012447	**146,00**
C6-390.00-M20-01		1	●	095	5035446	**80,50**
C6-390.540-50 050A		1	○	070	6424837	**631,00**
C6-390B.140-40 085		1	●	070	6418728	**377,00**
C6-390B.140-50 030		1	●	070	6418707	**418,00**
C6-390B.140-50 080		1	●	070	6418717	**418,00**
C6-390B.540-40 085		1	●	070	6424833	**567,00**
C6-390B.55-40 075		1	●	070	6424475	**377,00**
C6-390B.555-40 075		1	●	070	6425676	**567,00**
C6-390B.558-50 050		1	●	070	6426218	**631,00**
C6-390B.58-50 050		1	●	070	6424436	**418,00**
C6-390B.58-50 100		1	●	070	6424438	**418,00**
C6-391.01-63 060		1	●	070	5040088	**391,00**
C6-391.01-63 100A		1	●	070	5012661	**391,00**
C6-391.01-63 140A		1	●	070	5012662	**391,00**
C6-391.02-32 032		1	●	070	5040082	**377,00**
C6-391.02-32 070A		1	●	070	5017237	**377,00**
C6-391.02-40 040		1	●	070	5040083	**377,00**
C6-391.02-40 080A		1	●	070	5012664	**377,00**
C6-391.02-50 050A		1	●	070	5040084	**377,00**
C6-391.02-50 080A		1	●	070	5012665	**377,00**
C6-391.02-50 110A		1	●	070	5012668	**377,00**
C6-391.14-20 060		1	●	070	5040070	**411,00**
C6-391.14-20 065		1	●	070	5043643	**411,00**
C6-391.14-25 060		1	●	070	5029305	**411,00**
C6-391.14-25 065		1	●	070	5043644	**411,00**
C6-391.14-25 100		1	●	070	5040072	**411,00**
C6-391.14-25 105		1	●	070	5043645	**411,00**
C6-391.14-32 060		1	●	070	5029306	**411,00**
C6-391.14-32 065		1	●	070	5043646	**411,00**
C6-391.14-32 100		1	●	070	5040074	**411,00**
C6-391.14-32 105		1	●	070	5043647	**411,00**
C6-391.14-40 065		1	●	070	5040075	**411,00**
C6-391.14-40 070		1	●	070	5043648	**411,00**
C6-391.20-06 055		1	●	070	5012634	**377,00**
C6-391.20-08 055		1	●	070	5012635	**377,00**
C6-391.20-10 060		1	●	070	5012636	**377,00**
C6-391.20-12 060		1	●	070	5012637	**377,00**
C6-391.20-14 060		1	●	070	5012638	**377,00**
C6-391.20-16 065		1	●	070	5012639	**377,00**
C6-391.20-18 065		1	●	070	5012640	**377,00**
C6-391.20-20 065		1	●	070	5012641	**377,00**
C6-391.20-25 080		1	●	070	5012642	**377,00**
C6-391.20-32 090		1	●	070	5012643	**377,00**
C6-391.20-40 100		1	●	070	5012644	**377,00**
C6-391.27-16 070		1	●	070	5012473	**377,00**
C6-391.27-20 070		1	●	070	5012474	**377,00**
C6-391.27-25 070A		1	●	070	5012475	**377,00**

Bezeichnung / Designation	Sorte / Grade	VE / US		Disc. Gr.	Article No.	EURO Stück / piece
C6-391.27-32 075		1	●	070	5012476	**377,00**
C6-391.27-40 085		1	●	070	5012477	**377,00**
C6-A390B.45-40 085		1	●	070	6728031	**377,00**
C6-A390B.45-50 030		1	●	070	6728021	**418,00**
C6-A390B.45-50 080		1	●	070	6728022	**418,00**
C6-A391.05C-19 030M		1	●	070	7493050	**415,00**
C6-A391.05C-25 030M		1	●	070	7493051	**415,00**
C6-A391.20-19 065A		1	●	070	5523858	**377,00**
C6-ASHA-50071-32M		1	●	070	5893077	**457,00**
C6-ASHL3-36125-20		1	○	070	5043661	**1.198,00**
C6-ASHR3-36125-20		1	○	070	5043662	**1.198,00**
C6-ASHS-58115-32		1	●	070	5043660	**457,00**
C6-C-5000		1	○	095	5012443	**10,96**
C6-C-6000		1	○	095	5012444	**98,00**
C6-CP-01		1	○	095	5012451	**55,90**
C6-CRSNL-45065-12-P		1	●	065	7513031	**486,00**
C6-CRSNR-45065-12-P		1	●	065	7513032	**486,00**
C6-DCLNL-17100-12		1	●	065	5522823	**418,00**
C6-DCLNL-27140-16		1	●	065	5522826	**418,00**
C6-DCLNL-45065-12		1	●	065	5042282	**299,00**
C6-DCLNL-45065-12-P		1	●	065	6795172	**486,00**
C6-DCLNL-45065-16		1	●	065	5042284	**299,00**
C6-DCLNL-45065-16-P		1	●	065	7031728	**486,00**
C6-DCLNL-45065-19		1	●	065	5042286	**299,00**
C6-DCLNR-17100-12		1	●	065	5522825	**418,00**
C6-DCLNR-27140-16		1	●	065	5522827	**418,00**
C6-DCLNR-45065-12		1	●	065	5042283	**299,00**
C6-DCLNR-45065-12-P		1	●	065	6824185	**486,00**
C6-DCLNR-45065-16		1	●	065	5042285	**299,00**
C6-DCLNR-45065-16-P		1	●	065	7031729	**486,00**
C6-DCLNR-45065-19		1	●	065	5042287	**299,00**
C6-DCMNN-00090-12		1	●	065	5325912	**418,00**
C6-DCMNN-00090-16		1	●	065	5325913	**418,00**
C6-DCMNN-00115-12		1	●	065	5325914	**418,00**
C6-DDHNL-45065-15-P		1	●	065	7031764	**486,00**
C6-DDHNR-45065-15-P		1	●	065	7031765	**486,00**
C6-DDJNL-45065-11		1	●	065	5042346	**299,00**
C6-DDJNL-45065-15		1	●	065	5042348	**299,00**
C6-DDJNL-45065-15-P		1	●	065	6824244	**486,00**
C6-DDJNR-45065-11		1	●	065	5042347	**299,00**
C6-DDJNR-45065-15		1	●	065	5042349	**299,00**
C6-DDJNR-45065-15-P		1	●	065	6824245	**486,00**
C6-DDMNL-00130-15		1	●	065	5325915	**418,00**
C6-DDMNL-33120-15		1	●	065	5325916	**418,00**
C6-DDUNL-27140-15		1	●	065	5522857	**418,00**
C6-DDUNL-45065-15		1	○	065	5672915	**299,00**
C6-DDUNL-45065-15-P		1	●	065	7031766	**486,00**
C6-DDUNR-27140-15		1	●	065	5522859	**418,00**
C6-DDUNR-45065-15		1	○	065	5672916	**299,00**
C6-DDUNR-45065-15-P		1	●	065	7031767	**486,00**
C6-DSDNN-00065-12		1	○	065	5672917	**299,00**
C6-DSDNN-00070-19		1	○	065	5672918	**299,00**
C6-DSKNL-45065-12		1	●	065	5042320	**299,00**
C6-DSKNL-45065-19		1	●	065	5042324	**299,00**
C6-DSKNR-45065-12		1	●	065	5042321	**299,00**
C6-DSKNR-45065-19		1	●	065	5042325	**299,00**
C6-DSRNL-35065-12		1	●	065	5042326	**299,00**
C6-DSRNL-35065-15		1	●	065	5042328	**299,00**
C6-DSRNL-35065-19		1	●	065	5042330	**299,00**
C6-DSRNR-35065-12		1	●	065	5042327	**299,00**
C6-DSRNR-35065-15		1	●	065	5042329	**299,00**
C6-DSRNR-35065-19		1	●	065	5042331	**299,00**
C6-DSSNL-45052-19		1	●	065	5042332	**299,00**
C6-DSSNL-45054-15		1	●	065	5042334	**299,00**
C6-DSSNL-45056-12		1	●	065	5042336	**299,00**
C6-DSSNR-45052-19		1	●	065	5042333	**299,00**
C6-DSSNR-45054-15		1	●	065	5042335	**299,00**
C6-DSSNR-45056-12		1	●	065	5042337	**299,00**
C6-DVJBL-45065-16-P		1	●	065	7031734	**592,00**
C6-DVJBR-45065-16-P		1	●	065	7031735	**592,00**

Bezeichnung / Designation	Sorte / Grade	VE / US		Disc. Gr.	Article No.	EURO Stück / piece
C6-DVJNL-45065-16		1	●	065	5204646	299,00
C6-DVJNL-45065-16-P		1	●	065	7512341	486,00
C6-DVJNR-45065-16		1	●	065	5204647	299,00
C6-DVJNR-45065-16-P		1	●	065	7512342	486,00
C6-DWLNL-27140-10		1	●	065	5522887	418,00
C6-DWLNL-45065-08		1	●	065	5042298	299,00
C6-DWLNL-45065-08-P		1	●	065	6824291	486,00
C6-DWLNL-45065-10		1	●	065	5043651	299,00
C6-DWLNR-27140-10		1	●	065	5522888	418,00
C6-DWLNR-45065-08		1	●	065	5042574	299,00
C6-DWLNR-45065-08-P		1	●	065	6824292	486,00
C6-DWLNR-45065-10		1	●	065	5043652	299,00
C6-LC2060-00095		1	●	070	5012403	1.820,00
C6-LC2060-53040		1	●	070	5012391	1.820,00
C6-LC2090-42060		1	●	070	5012437	1.637,00
C6-MAS-01		1	○	095	5045217	1.115,00
C6-MAS-11		1	○	095	5045214	1.084,00
C6-MSS-E25L00		1	●	065	5012521	475,00
C6-MSS-E25R00		1	●	065	5012522	475,00
C6-MSS-E32L00		1	●	065	5011674	475,00
C6-MSS-E32L90		1	●	065	5011676	475,00
C6-MSS-E32R00		1	●	065	5011675	475,00
C6-MSS-E32R90		1	●	065	5011677	475,00
C6-MTJNL-45065-22		1	●	065	5012013	299,00
C6-MTJNR-45065-22		1	●	065	5012012	299,00
C6-NTS-SEL45065-16		1	○	065	5011581	321,00
C6-NTS-SEL45065-22		1	○	065	5011587	321,00
C6-NTS-SER45065-16		1	●	065	5011580	321,00
C6-NTS-SER45065-22		1	●	065	5011586	321,00
C6-NTS-SIL22090-16		1	○	065	5011635	452,00
C6-NTS-SIL22090-22		1	○	065	5011647	452,00
C6-NTS-SIL27105-16		1	○	065	5011637	452,00
C6-NTS-SIL27105-22		1	○	065	5011649	452,00
C6-NTS-SIR22090-16		1	●	065	5011634	452,00
C6-NTS-SIR22090-22		1	●	065	5011646	452,00
C6-NTS-SIR27105-16		1	●	065	5011636	452,00
C6-NTS-SIR27105-22		1	●	065	5011648	452,00
C6-PCLNL-17100-12		1	●	065	5011701	418,00
C6-PCLNL-22110-12		1	●	065	5011703	418,00
C6-PCLNL-27140-16		1	●	065	5011707	418,00
C6-PCLNL-35175-16		1	●	065	5011709	418,00
C6-PCLNL-45065-12		1	●	065	5011923	299,00
C6-PCLNL-45065-16		1	●	065	5011929	299,00
C6-PCLNL-45065-19		1	●	065	5011933	299,00
C6-PCLNR-17100-12		1	●	065	5011700	418,00
C6-PCLNR-22110-12		1	●	065	5011702	418,00
C6-PCLNR-27140-16		1	●	065	5011706	418,00
C6-PCLNR-35175-16		1	●	065	5011708	418,00
C6-PCLNR-45065-12		1	●	065	5011922	299,00
C6-PCLNR-45065-16		1	●	065	5011928	299,00
C6-PCLNR-45065-19		1	●	065	5011932	299,00
C6-PDJNL-45065-15		1	●	065	5011945	299,00
C6-PDJNR-45065-15		1	●	065	5011944	299,00
C6-PDUNL-17100-11		1	●	065	5011718	418,00
C6-PDUNL-27140-15		1	●	065	5011730	418,00
C6-PDUNL-35175-15		1	●	065	5011732	418,00
C6-PDUNR-17100-11		1	●	065	5011717	418,00
C6-PDUNR-27140-15		1	●	065	5011729	418,00
C6-PDUNR-35175-15		1	●	065	5011731	418,00
C6-PRDCN-00065-16		1	■	065	5012041*	299,00
C6-PRDCN-00065-20		1	■	065	5012045*	299,00
C6-PRDCN-00065-25		1	■	065	5674735*	299,00
C6-PRSCL-45065-16		1	●	065	5012075	299,00
C6-PRSCL-45065-20		1	●	065	5012083	299,00
C6-PRSCL-45065-25		1	●	065	5011963	299,00
C6-PRSCR-45065-16		1	●	065	5012074	299,00
C6-PRSCR-45065-20		1	●	065	5012082	299,00
C6-PRSCR-45065-25		1	●	065	5011962	299,00
C6-PSKNL-35175-15		1	●	065	5011756	418,00
C6-PSKNL-45065-15		1	●	065	5011991	299,00

Bezeichnung / Designation	Sorte / Grade	VE / US		Disc. Gr.	Article No.	EURO Stück / piece
C6-PSKNL-45065-19		1	●	065	5011995	299,00
C6-PSKNR-35175-15		1	●	065	5011755	418,00
C6-PSKNR-45065-15		1	●	065	5011990	299,00
C6-PSKNR-45065-19		1	●	065	5011994	299,00
C6-PSRNL-35065-19		1	●	065	5011961	299,00
C6-PSRNR-35065-19		1	●	065	5011960	299,00
C6-PTFNL-22110-16W		1	●	065	5011770	418,00
C6-PTFNL-27140-22W		1	●	065	5011780	418,00
C6-PTFNL-35175-22W		1	●	065	5011782	418,00
C6-PTFNR-22110-16W		1	●	065	5011769	418,00
C6-PTFNR-27140-22W		1	●	065	5011779	418,00
C6-PTFNR-35175-22W		1	●	065	5011781	418,00
C6-PWLNL-27140-08		1	●	065	5013751	418,00
C6-PWLNL-35175-08		1	●	065	5013749	418,00
C6-PWLNL-45065-08		1	●	065	5013737	299,00
C6-PWLNL-45065-10		1	●	065	5012003	299,00
C6-PWLNR-27140-08		1	●	065	5013750	418,00
C6-PWLNR-35175-08		1	●	065	5013748	418,00
C6-PWLNR-45065-08		1	●	065	5013736	299,00
C6-PWLNR-45065-10		1	●	065	5012002	299,00
C6-RC2060-00095		1	●	070	5012402	1.820,00
C6-RC2060-53040		1	●	070	5012390	1.820,00
C6-RC2090-42060		1	●	070	5012436	1.637,00
C6-SCLCL-45065-09		1	●	065	5335951	299,00
C6-SCLCL-45065-12		1	●	065	5335959	299,00
C6-SCLCR-45065-09		1	●	065	5335952	299,00
C6-SCLCR-45065-12		1	●	065	5335970	299,00
C6-SCMCN-00090-12		1	●	065	5325917	421,00
C6-SDJCL-45065-11		1	●	065	5335981	299,00
C6-SDJCR-45065-11		1	●	065	5335982	299,00
C6-SRDCN-00065-10		1	●	065	5335995	299,00
C6-SRDCN-00065-12		1	●	065	5335998	299,00
C6-SRDCN-00065-16		1	●	065	5336000	299,00
C6-SRDCN-00100-10		1	●	065	5325918	421,00
C6-SRDCN-00100-16		1	●	065	5325919	421,00
C6-SRSCL-45065-10		1	●	065	5336042	299,00
C6-SRSCL-45065-12		1	●	065	5336048	299,00
C6-SRSCL-45065-16		1	●	065	5336062	299,00
C6-SRSCR-45065-10		1	●	065	5336043	299,00
C6-SRSCR-45065-12		1	●	065	5336049	299,00
C6-SRSCR-45065-16		1	●	065	5336063	299,00
C6-SVHBL-45065-16		1	●	065	5336109	359,00
C6-SVHBR-45065-16		1	●	065	5336111	359,00
C6-SVJBL-45065-16		1	●	065	5336123	359,00
C6-SVJBR-45065-16		1	●	065	5336125	359,00
C6-SVMBL-00130-16		1	●	065	5325931	511,00
C6-SVMBL-33120-16		1	●	065	5325932	511,00
C6-SVQBL-22120-16		1	●	065	5205581	506,00
C6-SVQBL-27145-16		1	●	065	5205583	506,00
C6-SVQBL-35175-16		1	●	065	5205585	506,00
C6-SVQBR-22120-16		1	●	065	5205582	506,00
C6-SVQBR-27145-16		1	●	065	5205584	506,00
C6-SVQBR-35175-16		1	●	065	5205586	506,00
C6-SVVBN-00065-16		1	●	065	5336142	359,00
C6-WDT-02		1	○	095	5012448	174,00
C8-390.540-50 070A		1	●	070	6424831	691,00
C8-390B.140-50 070		1	●	070	6418718	461,00
C8-390B.140-50 120		1	●	070	6418719	461,00
C8-390B.558-50 070		1	●	070	6425674	691,00
C8-390B.58-50 070		1	●	070	6424437	461,00
C8-390B.58-50 120		1	●	070	6424439	461,00
C8-391.01-80 065		1	●	070	5887221	431,00
C8-391.01-80 100A		1	●	070	5887149	410,00
C8-391.01-80 125A		1	●	070	5887220	431,00
C8-391.02-32 060B		1	●	070	6426468	410,00
C8-391.02-40 070B		1	●	070	6426469	410,00
C8-391.02-50 045A		1	●	070	5887229	410,00
C8-391.02-50 080B		1	●	070	5887233	410,00
C8-391.02-63 055A		1	●	070	5887230	410,00
C8-391.02-63 080B		1	●	070	5887231	410,00

Bezeichnung / Designation	Sorte / Grade	VE / US		Disc. Gr.	Article No.	EURO Stück / piece
C8-391.02-63 120A		1	●	070	5887232	410,00
C8-391.14-25 070		1	●	070	6426303	452,00
C8-391.14-25 075		1	●	070	6426308	452,00
C8-391.14-32 070		1	●	070	6426305	452,00
C8-391.14-32 075		1	●	070	6426309	452,00
C8-391.14-32 160		1	●	070	6426307	452,00
C8-391.14-32 165		1	●	070	6426331	452,00
C8-391.14-40 070		1	●	070	6426306	452,00
C8-391.14-40 075		1	●	070	6426330	452,00
C8-391.20-16 070		1	●	070	5887143	410,00
C8-391.20-20 070		1	●	070	5887144	410,00
C8-391.20-25 080		1	●	070	5887145	410,00
C8-391.20-32 080		1	●	070	5887146	410,00
C8-391.20-40 110		1	●	070	5887147	410,00
C8-A390B.45-50 070		1	●	070	6728023	461,00
C8-A390B.45-50 120		1	●	070	6728024	461,00
C8-ASHA-55085-32M		1	●	070	5887250	572,00
C8-ASHL-40140-32		1	●	070	5887235	650,00
C8-ASHL45-50135-32		1	●	070	5887237	650,00
C8-ASHR-40140-32		1	●	070	5887234	650,00
C8-ASHR45-50135-32		1	●	070	5887236	650,00
C8-CP-01		1	●	095	5892914	57,90
C8-DCLNL-55080-12		1	●	065	5672978	324,00
C8-DCLNL-55080-12-P		1	●	065	7031760	527,00
C8-DCLNL-55080-16		1	●	065	5673010	324,00
C8-DCLNL-55080-16-P		1	●	065	7512205	527,00
C8-DCLNL-55080-19		1	●	065	5673012	324,00
C8-DCLNR-55080-12		1	●	065	5672979	324,00
C8-DCLNR-55080-12-P		1	●	065	7031761	527,00
C8-DCLNR-55080-16		1	●	065	5673011	324,00
C8-DCLNR-55080-16-P		1	●	065	7512206	527,00
C8-DCLNR-55080-19		1	●	065	5673013	324,00
C8-DCMNN-00150-16		1	●	065	5674752	452,00
C8-DDJNL-55080-15		1	●	065	5673014	324,00
C8-DDJNL-55080-15-P		1	●	065	7031762	527,00
C8-DDJNR-55080-15		1	●	065	5673016	324,00
C8-DDJNR-55080-15-P		1	●	065	7031763	527,00
C8-DDMNL-00160-15		1	●	065	5674750	452,00
C8-DDUNL-55080-15		1	○	065	5673032	324,00
C8-DDUNR-55080-15		1	○	065	5673017	324,00
C8-DSDNN-00080-25		1	○	065	5673099	324,00
C8-DSKNL-55080-19		1	○	065	5673035	324,00
C8-DSKNR-55080-19		1	○	065	5673030	324,00
C8-DSRNL-45080-19		1	●	065	5673033	324,00
C8-DSRNL-45080-25		1	○	065	5673034	324,00
C8-DSRNR-45080-19		1	●	065	5673018	324,00
C8-DSRNR-45080-25		1	○	065	5673019	324,00
C8-DVJBL-55080-16-P		1	●	065	7031736	641,00
C8-DVJBR-55080-16-P		1	●	065	7031737	641,00
C8-DVJNL-55080-16		1	○	065	5673036	324,00
C8-DVJNR-55080-16		1	○	065	5673031	324,00
C8-DVMNL-00160-16		1	●	065	5674751	550,00
C8-LC2090-50088		1	●	070	5887251	1.775,00
C8-MAS-01		1	●	095	5892593	1.159,00
C8-MAS-11		1	●	095	5892592	1.129,00
C8-PCLNL-55080-12		1	●	065	5673081	324,00
C8-PCLNL-55080-16		1	○	065	5673083	324,00
C8-PCLNL-55080-19		1	●	065	5673085	324,00
C8-PCLNL-55080-25		1	○	065	5673087	324,00
C8-PCLNR-55080-12		1	●	065	5673082	324,00
C8-PCLNR-55080-16		1	○	065	5673084	324,00
C8-PCLNR-55080-19		1	●	065	5673086	324,00
C8-PCLNR-55080-25		1	○	065	5673088	324,00
C8-PRSCL-55080-20		1	○	065	5673095	324,00
C8-PRSCL-55080-25		1	○	065	5673097	324,00
C8-PRSCR-55080-20		1	○	065	5673096	324,00
C8-PRSCR-55080-25		1	○	065	5673098	324,00
C8-PSKNL-55080-19		1	○	065	5673093	324,00
C8-PSKNR-55080-19		1	○	065	5673094	324,00
C8-PSRNL-45080-19		1	○	065	5673089	324,00

Bezeichnung / Designation	Sorte / Grade	VE / US		Disc. Gr.	Article No.	EURO Stück / piece
C8-PSRNL-45080-25		1	●	065	5673091	324,00
C8-PSRNR-45080-19		1	○	065	5673090	324,00
C8-PSRNR-45080-25		1	●	065	5673092	324,00
C8-RC2090-50088		1	●	070	5887252	1.775,00
C8-WDT-01		1	●	095	5892913	178,00
CCGT060201-FM2	WSM20S	10	●	029	7054033	17,46
CCGT060201-FN2	WNN10	10	●	028	6955640	16,12
CCGT060201-MN2	WN10	10	●	028	8132929	13,21
CCGT060201-MN2	WNN10	10	●	028	6955692	16,12
CCGT060201M-FP2	WEP10C	10	●	029	7780024	15,72
CCGT060202-FL2	WPP20G	10	●	029	8369459	17,98
CCGT060202-FL2	WSM01	10	●	029	8369460	17,99
CCGT060202-FM2	WSM01	10	●	029	7499351	17,99
CCGT060202-FM2	WSM20S	10	●	029	7054034	17,46
CCGT060202-FN2	WN10	10	●	028	8132960	13,21
CCGT060202-FN2	WNN10	10	●	028	6955641	16,12
CCGT060202-MN2	WN10	10	●	028	8132961	13,21
CCGT060202-MN2	WNN10	10	●	028	6955693	16,12
CCGT060202-MN2	WSM01	10	●	029	6876621	17,99
CCGT060202-PF5	WPP20	10	■	029	5202000*	17,98
CCGT060202-PM2	WXN10	10	●	028	5025569	16,12
CCGT060202-X15	WAK15	10	●	019	5015751	17,46
CCGT060202-X15	WTP35	10	●	019	5004266	17,90
CCGT060202-X15	WXM15	10	●	019	5004480	17,46
CCGT060202-X5	WAK15	10	●	019	5015753	17,46
CCGT060202-X5	WTP35	10	●	019	5004268	17,90
CCGT060202-X5	WXM15	10	●	019	5004476	17,46
CCGT060202FS-1	WDN10	2	●	025	6674532	64,20
CCGT060202M-FP2	WEP10C	10	●	029	7780025	15,72
CCGT060204-FL2	WPP20G	10	●	029	8369461	17,98
CCGT060204-FL2	WPP30G	10	●	029	8369462	17,98
CCGT060204-FL2	WSM01	10	●	029	8369463	17,99
CCGT060204-FM2	WSM01	10	●	029	7499352	17,99
CCGT060204-FM2	WSM20S	10	●	029	7054035	17,46
CCGT060204-FN2	WN10	10	●	028	8132962	13,21
CCGT060204-FN2	WNN10	10	●	028	6955642	16,12
CCGT060204-MK4	WKK20S	10	●	029	6363920	17,46
CCGT060204-MM4	WSM01	10	●	029	7021235	17,99
CCGT060204-MM4	WSM20S	10	●	029	6844576	17,46
CCGT060204-MN2	WN10	10	●	028	8132963	13,21
CCGT060204-MN2	WNN10	10	●	028	6955694	16,12
CCGT060204-MN2	WSM01	10	●	029	6876622	17,99
CCGT060204-MP4	WPP20G	10	●	029	8204159	17,98
CCGT060204-MP4	WPP20S	10	■	029	6217725*	17,98
CCGT060204-PF5	WPP20	10	■	029	5202002*	17,98
CCGT060204-PF5	WPP30	10	■	029	5202003*	17,98
CCGT060204-PF5	WSM30	10	●	029	5357514	17,46
CCGT060204-PM2	WXN10	10	●	028	5025570	16,12
CCGT060204-X15	WAK15	10	●	019	5015754	17,46
CCGT060204-X15	WTP35	10	●	019	5004269	17,90
CCGT060204-X15	WXM15	10	●	019	5004482	17,46
CCGT060204-X5	WAK15	10	●	019	5015756	17,46
CCGT060204-X5	WTP35	10	●	019	5004271	17,90
CCGT060204-X5	WXM15	10	●	019	5004478	17,46
CCGT060204FS-1	WDN10	2	●	025	6674441	64,20
CCGT060204FS-M1	WDN10	2	●	025	6674442	89,90
CCGT060204M-FP2	WEP10C	10	●	029	7779957	15,72
CCGT060208-MK4	WKK20S	10	●	029	6363930	17,46
CCGT060208-MM4	WSM01	10	●	029	7021236	17,99
CCGT060208-MM4	WSM20S	10	●	029	6844577	17,46
CCGT060208FS-1	WDN10	2	●	025	6674533	64,20
CCGT09T301-FM2	WSM20S	10	●	029	7054036	20,39
CCGT09T301-FN2	WNN10	10	●	028	6955643	18,83
CCGT09T301-MN2	WN10	10	●	028	8132964	15,44
CCGT09T301-MN2	WNN10	10	●	028	6955695	18,83
CCGT09T301M-FP2	WEP10C	10	●	029	7780026	18,36
CCGT09T302-FL2	WPP20G	10	●	029	8369464	21,01
CCGT09T302-FL2	WSM01	10	●	029	8369465	21,00
CCGT09T302-FM2	WSM01	10	●	029	7499353	21,00
CCGT09T302-FM2	WSM20S	10	●	029	7054037	20,39

Bezeichnung / Designation	Sorte / Grade	VE / US		Disc. Gr.	Article No.	EURO Stück / piece
CCGT09T302-FN2	WN10	10	●	028	8132965	15,44
CCGT09T302-FN2	WNN10	10	●	028	6955644	18,83
CCGT09T302-MN2	WN10	10	●	028	8132966	15,44
CCGT09T302-MN2	WNN10	10	●	028	6955696	18,83
CCGT09T302-MN2	WSM01	10	●	029	6876623	21,00
CCGT09T302-PF5	WPP20	10	■	029	5202004[1]	21,01
CCGT09T302-PF5	WSM30	10	●	029	5357515	20,39
CCGT09T302-PM2	WXN10	10	●	028	5025571	18,83
CCGT09T302M-FP2	WEP10C	10	●	029	7780027	18,36
CCGT09T304-FL2	WPP20G	10	●	029	8369466	21,01
CCGT09T304-FL2	WPP30G	10	●	029	8369467	21,01
CCGT09T304-FL2	WSM01	10	●	029	8369468	21,00
CCGT09T304-FM2	WSM01	10	●	029	7499354	21,00
CCGT09T304-FM2	WSM10S	10	●	029	7054038	20,39
CCGT09T304-FM2	WSM20S	10	●	029	7054039	20,39
CCGT09T304-FN2	WN10	10	●	028	8132967	15,44
CCGT09T304-FN2	WNN10	10	●	028	6955645	18,83
CCGT09T304-MK4	WKK20S	10	●	029	6363932	20,39
CCGT09T304-MM4	WSM01	10	●	029	7021237	21,00
CCGT09T304-MM4	WSM20S	10	●	029	6844578	20,39
CCGT09T304-MN2	WN10	10	●	028	8132968	15,44
CCGT09T304-MN2	WNN10	10	●	028	6955697	18,83
CCGT09T304-MN2	WSM01	10	●	029	6876624	21,00
CCGT09T304-MP4	WPP10G	10	●	029	8204191	21,01
CCGT09T304-MP4	WPP20G	10	●	029	8204190	21,01
CCGT09T304-PF5	WAM30	10	●	029	5025519	20,90
CCGT09T304-PF5	WPP20	10	■	029	5202006[1]	21,01
CCGT09T304-PF5	WPP30	10	■	029	5202007[1]	21,01
CCGT09T304-PF5	WSM30	10	●	029	5357516	20,39
CCGT09T304-PM2	WXN10	10	●	028	5025572	18,83
CCGT09T304FS-1	WDN10	2	●	025	6674534	70,60
CCGT09T304FS-M1	WDN10	2	●	025	6674443	98,90
CCGT09T304M-FP2	WEP10C	10	●	029	7779958	18,36
CCGT09T308-FM2	WSM01	10	●	029	7499355	21,00
CCGT09T308-FM2	WSM10S	10	●	029	7054050	20,39
CCGT09T308-FM2	WSM20S	10	●	029	7054051	20,39
CCGT09T308-FN2	WN10	10	●	028	8132969	15,44
CCGT09T308-FN2	WNN10	10	●	028	6955646	18,83
CCGT09T308-MK4	WKK20S	10	●	029	6363935	20,39
CCGT09T308-MM4	WSM01	10	●	029	7021238	21,00
CCGT09T308-MM4	WSM20S	10	●	029	6844579	20,39
CCGT09T308-MN2	WN10	10	●	028	8132970	15,44
CCGT09T308-MN2	WNN10	10	●	028	6955698	18,83
CCGT09T308-MN2	WSM01	10	●	029	6876625	21,00
CCGT09T308-MP4	WPP10G	10	●	029	8204192	21,01
CCGT09T308-MP4	WPP20G	10	●	029	8204193	21,01
CCGT09T308-PM2	WXN10	10	●	028	5025573	18,83
CCGT09T308FS-1	WDN10	2	●	025	6674535	70,60
CCGT09T308M-FP2	WEP10C	10	●	029	7780028	18,36
CCGT120402-MN2	WN10	10	●	028	8132971	16,54
CCGT120402-MN2	WNN10	10	●	028	6955699	20,16
CCGT120404-FM2	WSM20S	10	●	029	7054052	21,85
CCGT120404-FN2	WN10	10	●	028	8132972	16,54
CCGT120404-FN2	WNN10	10	●	028	6955647	20,16
CCGT120404-MN2	WN10	10	●	028	8132973	16,54
CCGT120404-MN2	WNN10	10	●	028	6955700	20,16
CCGT120404-PM2	WXN10	10	●	028	5025575	20,16
CCGT120408-FM2	WSM20S	10	●	029	7054053	21,85
CCGT120408-FN2	WN10	10	●	028	8132974	16,54
CCGT120408-FN2	WNN10	10	●	028	6955648	20,16
CCGT120408-MK4	WKK20S	10	●	029	6363939	21,85
CCGT120408-MM4	WSM20S	10	●	029	6844620	21,85
CCGT120408-MN2	WN10	10	●	028	8132975	16,54
CCGT120408-MN2	WNN10	10	●	028	6955701	20,16
CCGT120408-MP4	WPP10G	10	●	029	8204194	22,50
CCGT120408-MP4	WPP20G	10	●	029	8204195	22,50
CCGT120408-PM2	WXN10	10	●	028	5025576	20,16
CCGW060202EM-2	WBS10	2	●	023	7636851	73,80
CCGW060202FS-1	WDN10	2	●	025	6674407	62,30
CCGW060202TM-2	WBH20C	2	●	023	8306456	77,10

Bezeichnung / Designation	Sorte / Grade	VE / US		Disc. Gr.	Article No.	EURO Stück / piece
CCGW060202TS-2	WBH10	2	●	023	7636849	70,10
CCGW060202TS-2	WBH10C	2	●	023	7636850	77,10
CCGW060202TS-2	WBK20	2	●	023	7823858	70,10
CCGW060204EM-2	WBS10	2	●	023	7636855	73,80
CCGW060204FS-1	WDN10	2	●	025	6674408	62,30
CCGW060204FSL-9	WDN10	2	●	025	6674536	99,70
CCGW060204FSR-9	WDN10	2	●	025	6674537	99,70
CCGW060204TM-2	WBH10	2	●	023	7636852	70,10
CCGW060204TM-2	WBH10C	2	●	023	7636853	77,10
CCGW060204TM-2	WBH20	2	●	023	7636854	70,10
CCGW060204TM-2	WBH20C	2	●	023	8306457	77,10
CCGW060204TM-2	WBH30	2	●	023	8060978	70,10
CCGW060204TS-2	WBK20	2	●	023	7823859	70,10
CCGW060208FS-1	WDN10	2	●	025	6674468	62,30
CCGW060208TM-2	WBH10C	2	●	023	7636857	77,10
CCGW060208TM-2	WBH20	2	●	023	7636858	70,10
CCGW060208TM-2	WBH20C	2	●	023	8306458	77,10
CCGW060208TM-2	WBH30	2	●	023	8060979	70,10
CCGW060208TS-2	WBK20	2	●	023	7823860	70,10
CCGW09T302FS-1	WDN10	2	●	025	6674469	68,60
CCGW09T304EM-2	WBS10	2	●	023	7636864	73,80
CCGW09T304FS-1	WDN10	2	●	025	6674409	68,60
CCGW09T304FSL-9	WDN10	2	●	025	6674538	110,00
CCGW09T304FSR-9	WDN10	2	●	025	6674539	110,00
CCGW09T304TM-2	WBH10	2	●	023	7636859	70,10
CCGW09T304TM-2	WBH10C	2	●	023	7636860	77,10
CCGW09T304TM-2	WBH20	2	●	023	7636861	70,10
CCGW09T304TM-2	WBH20C	2	●	023	8306459	77,10
CCGW09T304TM-2	WBH30	2	●	023	8060980	70,10
CCGW09T304TS-2	WBK20	2	●	023	7823861	70,10
CCGW09T304TS-MW2	WBH10C	2	●	023	7636863	84,90
CCGW09T308EM-2	WBS10	2	●	023	7636870	73,80
CCGW09T308FS-1	WDN10	2	●	025	6674440	68,60
CCGW09T308FSL-9	WDN10	2	●	025	6674540	110,00
CCGW09T308FSR-9	WDN10	2	●	025	6674541	110,00
CCGW09T308TM-2	WBH10	2	●	023	7636865	70,10
CCGW09T308TM-2	WBH10C	2	●	023	7636866	77,10
CCGW09T308TM-2	WBH20	2	●	023	7636867	70,10
CCGW09T308TM-2	WBH20C	2	●	023	8306520	77,10
CCGW09T308TM-2	WBH30	2	●	023	8060981	70,10
CCGW09T308TM-MW2	WBH10C	2	●	023	7636869	84,90
CCGW09T308TS-2	WBK20	2	●	023	7823862	70,10
CCGW120404FS-1	WDN10	2	●	025	6674530	71,70
CCGW120408FS-1	WDN10	2	●	025	6674531	71,70
CCMT060202-E47	WPP20S	10	●	019	7077840	9,71
CCMT060202-E47	WSM20S	10	●	019	7077841	9,71
CCMT060202-E47	WSM30S	10	●	019	7077842	9,71
CCMT060202-FM4	WMP20S	10	●	029	6462774	9,71
CCMT060202-FM4	WSM10S	10	●	029	6839022	9,71
CCMT060202-FM4	WSM20S	10	●	029	6839023	9,71
CCMT060202-FM4	WSM30S	10	●	029	6839024	9,71
CCMT060202-FP4	WEP10C	10	●	029	7425452	8,74
CCMT060202-FP4	WKP01G	10	●	029	8422861	9,99
CCMT060202-FP4	WPP10G	10	●	029	8204196	9,99
CCMT060202-FP4	WPP10S	10	●	029	6428695[2]	9,99
CCMT060202-FP4	WPP20G	10	●	029	8204197	9,99
CCMT060202-FP4	WPP20S	10	■	029	6439421[1]	9,99
CCMT060202-FW4	WPP20G	10	●	029	8293223	11,51
CCMT060202-FW4	WSM20S	10	●	029	8293224	11,19
CCMT060204-E47	WPP20S	10	●	019	7077843	9,71
CCMT060204-E47	WSM20S	10	●	019	7077844	9,71
CCMT060204-E47	WSM30S	10	●	019	7077845	9,71
CCMT060204-FK6	WKK10S	10	●	029	6733971	9,71
CCMT060204-FK6	WKK20S	10	●	029	6733972	9,71
CCMT060204-FM4	WMP20S	10	●	029	6463374	9,71
CCMT060204-FM4	WSM01	10	●	029	8190160	9,99
CCMT060204-FM4	WSM10S	10	●	029	6839025	9,71
CCMT060204-FM4	WSM20S	10	●	029	6839026	9,71
CCMT060204-FM4	WSM30S	10	●	029	6839027	9,71
CCMT060204-FM6	WSM20S	10	●	029	7054130	9,71

Bezeichnung / Designation	Sorte / Grade	VE / US		Disc. Gr.	Article No.	EURO Stück / piece
CCMT060204-FM6	WSM30S	10	●	029	7054131	9,71
CCMT060204-FP4	WEP10C	10	●	029	7425453	8,74
CCMT060204-FP4	WKP01G	10	●	029	8422862	9,99
CCMT060204-FP4	WPP10G	10	●	029	8204199	9,99
CCMT060204-FP4	WPP10S	10	■	029	6428752[1]	9,99
CCMT060204-FP4	WPP20G	10	●	029	8204198	9,99
CCMT060204-FP4	WPP20S	10	●	029	6439423[2]	9,99
CCMT060204-FP6	WPP10G	10	●	029	8204201	9,99
CCMT060204-FP6	WPP20G	10	●	029	8204200	9,99
CCMT060204-FP6	WPP20S	10	■	029	6730364[1]	9,99
CCMT060204-FW4	WKP01G	10	●	029	8422377	11,51
CCMT060204-FW4	WPP10G	10	●	029	8293225	11,51
CCMT060204-FW4	WPP20G	10	●	029	8293226	11,51
CCMT060204-FW4	WSM10S	10	●	029	8293227	11,19
CCMT060204-FW4	WSM20S	10	●	029	8293228	11,19
CCMT060204-FW4	WSM30S	10	●	029	8293229	11,19
CCMT060204-MK4	WKK10S	10	●	029	6484652	9,71
CCMT060204-MK4	WKK20S	10	●	029	6485339	9,71
CCMT060204-MM4	WMP20S	10	●	029	6636291	9,71
CCMT060204-MM4	WSM10S	10	●	029	6836813	9,71
CCMT060204-MM4	WSM20S	10	●	029	6836812	9,71
CCMT060204-MM4	WSM30S	10	●	029	7054172	9,71
CCMT060204-MP4	WPP10G	10	●	029	8204203	9,99
CCMT060204-MP4	WPP20G	10	●	029	8204202	9,99
CCMT060204-MP4	WPP20S	10	■	029	6422291[1]	9,99
CCMT060204-MP6	WPP10G	10	●	029	8205056	9,99
CCMT060204-MP6	WPP20G	10	●	029	8205057	9,99
CCMT060204-MP6	WPP30G	10	●	029	8205058	9,99
CCMT060204-PF	WPP01	10	■	029	5262921[1]	11,51
CCMT060204-PF	WPP10S	10	■	029	6780266[1]	11,51
CCMT060204-PF	WPP20S	10	■	029	6780267[1]	11,51
CCMT060204-PF	WSM20S	10	■	029	7054090[1]	11,19
CCMT060204-PF	WSM30S	10	■	029	7054091[1]	11,19
CCMT060204-PF4	WSM10	10	●	029	5848594	9,71
CCMT060204-PF4	WSM20	10	●	029	5615013	9,71
CCMT060204-PM5	WPP20	10	■	029	5199595[1]	9,99
CCMT060204-PM5	WSM20	10	●	029	5614899	9,71
CCMT060204-PS4	WAK10	10	●	029	5016466	9,71
CCMT060204-RK4	WKK10S	10	●	029	6650878	9,71
CCMT060204-RK4	WKK20S	10	●	029	6650879	9,71
CCMT060204-RM4	WMP20S	10	●	029	6461219	9,71
CCMT060204-RM4	WSM10S	10	●	029	6839090	9,71
CCMT060204-RM4	WSM20S	10	●	029	6839091	9,71
CCMT060204-RM4	WSM30S	10	●	029	6839092	9,71
CCMT060204-RP4	WPP10G	10	●	029	8204206	9,99
CCMT060204-RP4	WPP20G	10	●	029	8204204	9,99
CCMT060204-RP4	WPP20S	10	■	029	6449129[1]	9,99
CCMT060204-RP4	WPP30G	10	●	029	8204205	9,99
CCMT060204-RP4	WPP30S	10	■	029	6449151[1]	9,99
CCMT060208-FK6	WKK10S	10	●	029	6733973	9,71
CCMT060208-FK6	WKK20S	10	●	029	6733974	9,71
CCMT060208-FM4	WMP20S	10	●	029	6463459	9,71
CCMT060208-FM4	WSM20S	10	●	029	6839028	9,71
CCMT060208-FM4	WSM30S	10	●	029	6839029	9,71
CCMT060208-FM6	WSM20S	10	●	029	7054132	9,71
CCMT060208-FP4	WKP01G	10	●	029	8422863	9,99
CCMT060208-FP4	WPP10G	10	●	029	8204207	9,99
CCMT060208-FP4	WPP10S	10	■	029	6428757[1]	9,99
CCMT060208-FP4	WPP20G	10	●	029	8204208	9,99
CCMT060208-FP6	WPP20G	10	●	029	8204209	9,99
CCMT060208-FW4	WKP01G	10	●	029	8422378	11,51
CCMT060208-FW4	WPP10G	10	●	029	8296360	11,51
CCMT060208-FW4	WPP20G	10	●	029	8296361	11,51
CCMT060208-FW4	WSM20S	10	●	029	8296362	11,19
CCMT060208-MK4	WKK20S	10	●	029	6485337	9,71
CCMT060208-MM4	WMP20S	10	●	029	6636292	9,71
CCMT060208-MM4	WSM20S	10	●	029	6836814	9,71
CCMT060208-MP4	WPP10G	10	●	029	8204211	9,99
CCMT060208-MP4	WPP20G	10	●	029	8204210	9,99
CCMT060208-MP4	WPP20S	10	●	029	6422298[2]	9,99

Bezeichnung / Designation	Sorte / Grade	VE / US		Disc. Gr.	Article No.	EURO Stück / piece
CCMT060208-PF	WPP10S	10	■	029	6780268[1]	11,51
CCMT060208-PF	WPP20S	10	■	029	6780269[1]	11,51
CCMT060208-PF	WSM20S	10	■	029	7054092[1]	11,19
CCMT060208-PF4	WPP01	10	■	029	5262924[1]	9,99
CCMT060208-RK4	WKK10S	10	●	029	6650910	9,71
CCMT060208-RK4	WKK20S	10	●	029	6650911	9,71
CCMT060208-RM4	WMP20S	10	●	029	6461282	9,71
CCMT060208-RM4	WSM10S	10	●	029	6839093	9,71
CCMT060208-RM4	WSM20S	10	●	029	6839094	9,71
CCMT060208-RM4	WSM30S	10	●	029	6839095	9,71
CCMT060208-RP4	WPP20G	10	●	029	8204213	9,99
CCMT060208-RP4	WPP20S	10	■	029	6449153[1]	9,99
CCMT060208-RP4	WPP30G	10	●	029	8204212	9,99
CCMT060208-RP4	WPP30S	10	■	029	6449155[1]	9,99
CCMT090304-MP6	WPP20G	10	●	029	8205094	11,65
CCMT090308-MP6	WPP20G	10	●	029	8205095	11,65
CCMT09T302-E47	WPP20S	10	●	019	7077846	11,31
CCMT09T302-E47	WSM20S	10	●	019	7077847	11,31
CCMT09T302-FM4	WMP20S	10	●	029	6463536	11,31
CCMT09T302-FM4	WSM01	10	●	029	8190161	11,65
CCMT09T302-FM4	WSM10S	10	●	029	6839030	11,31
CCMT09T302-FM4	WSM20S	10	●	029	6839031	11,31
CCMT09T302-FM4	WSM30S	10	●	029	6839032	11,31
CCMT09T302-FP4	WEP10C	10	●	029	7425454	10,17
CCMT09T302-FP4	WKP01G	10	●	029	8422864	11,65
CCMT09T302-FP4	WPP10G	10	●	029	8204215	11,65
CCMT09T302-FP4	WPP20G	10	●	029	8204214	11,65
CCMT09T302-FP4	WPP20S	10	■	029	6439425[1]	11,65
CCMT09T302-FW4	WPP20G	10	●	029	8296363	13,43
CCMT09T302-FW4	WSM20S	10	●	029	8296364	13,04
CCMT09T302-PF4	WPP01	10	●	029	5262941[1]	11,65
CCMT09T304-E47	WPP20S	10	●	019	7077849	11,31
CCMT09T304-E47	WSM20S	10	●	019	7077850	11,31
CCMT09T304-E47	WSM30S	10	●	019	7077851	11,31
CCMT09T304-FK6	WKK10S	10	●	029	6733976	11,31
CCMT09T304-FK6	WKK20S	10	●	029	6733975	11,31
CCMT09T304-FM4	WMP20S	10	●	029	6463577	11,31
CCMT09T304-FM4	WSM01	10	●	029	8190162	11,65
CCMT09T304-FM4	WSM10S	10	●	029	6839033	11,31
CCMT09T304-FM4	WSM20S	10	●	029	6839034	11,31
CCMT09T304-FM4	WSM30S	10	●	029	6839035	11,31
CCMT09T304-FM6	WSM20S	10	●	029	7054133	11,31
CCMT09T304-FM6	WSM30S	10	●	029	7054134	11,31
CCMT09T304-FP4	WEP10C	10	●	029	7425455	10,17
CCMT09T304-FP4	WKP01G	10	●	029	8422865	11,65
CCMT09T304-FP4	WPP10G	10	●	029	8204217	11,65
CCMT09T304-FP4	WPP10S	10	■	029	6435453[1]	11,65
CCMT09T304-FP4	WPP20G	10	●	029	8204216	11,65
CCMT09T304-FP4	WPP20S	10	■	029	6439426[1]	11,65
CCMT09T304-FP6	WPP10G	10	●	029	8204219	11,65
CCMT09T304-FP6	WPP20G	10	●	029	8204218	11,65
CCMT09T304-FP6	WPP20S	10	■	029	6730367[1]	11,65
CCMT09T304-FW4	WKP01G	10	●	029	8422379	13,43
CCMT09T304-FW4	WPP10G	10	●	029	8296365	13,43
CCMT09T304-FW4	WPP20G	10	●	029	8296366	13,43
CCMT09T304-FW4	WSM10S	10	●	029	8296367	13,04
CCMT09T304-FW4	WSM20S	10	●	029	8296368	13,04
CCMT09T304-FW4	WSM30S	10	●	029	8296369	13,04
CCMT09T304-MK4	WKK10S	10	●	029	6485478	11,31
CCMT09T304-MK4	WKK20S	10	●	029	6485351	11,31
CCMT09T304-MM4	WMP20S	10	●	029	6636293	11,31
CCMT09T304-MM4	WSM01	10	●	029	8190172	11,65
CCMT09T304-MM4	WSM10S	10	●	029	6836816	11,31
CCMT09T304-MM4	WSM20S	10	●	029	6836815	11,31
CCMT09T304-MM4	WSM30S	10	●	029	7054173	11,31
CCMT09T304-MP4	WPP10G	10	●	029	8204221	11,65
CCMT09T304-MP4	WPP20G	10	●	029	8204220	11,65
CCMT09T304-MP4	WPP20S	10	■	029	6296409[1]	11,65
CCMT09T304-MP6	WPP10G	10	●	029	8205059	11,65
CCMT09T304-MP6	WPP20G	10	●	029	8205070	11,65

Bezeichnung / Designation	Sorte / Grade	VE / US		Disc. Gr.	Article No.	EURO Stück / piece
CCMT09T304-MP6	WPP30G	10	●	029	8205071	11,65
CCMT09T304-MW4	WKK20S	10	●	029	8295708	13,04
CCMT09T304-MW4	WPP10G	10	●	029	8295709	13,43
CCMT09T304-MW4	WPP20G	10	●	029	8296290	13,43
CCMT09T304-MW4	WSM20S	10	●	029	8296291	13,04
CCMT09T304-PF	WPP01	10	■	029	5262942[1]	13,43
CCMT09T304-PF	WPP10S	10	■	029	6780270[1]	13,43
CCMT09T304-PF	WPP20S	10	■	029	6780271[1]	13,43
CCMT09T304-PF	WSM20S	10	●	029	7054093[1]	13,04
CCMT09T304-PF	WSM30S	10	■	029	7054094[1]	13,04
CCMT09T304-PF4	WPP01	10	●	029	5262943[1]	11,65
CCMT09T304-PF4	WSM20	10	●	029	5615016	11,31
CCMT09T304-PM	WKK20S	10	●	029	6780248[1]	13,04
CCMT09T304-PM	WPP20S	10	■	029	6780249[1]	13,43
CCMT09T304-PM5	WAM30	10	●	029	5022099	11,61
CCMT09T304-PM5	WPP20	10	■	029	5199630[1]	11,65
CCMT09T304-PM5	WSM30	10	●	029	5354786	11,31
CCMT09T304-PS4	WAK10	10	■	029	5016212[1]	11,31
CCMT09T304-RK4	WKK10S	10	●	029	6650912	11,31
CCMT09T304-RK4	WKK20S	10	●	029	6650913	11,31
CCMT09T304-RM4	WMP20S	10	●	029	6461285	11,31
CCMT09T304-RM4	WSM10S	10	●	029	6839096	11,31
CCMT09T304-RM4	WSM20S	10	●	029	6839097	11,31
CCMT09T304-RM4	WSM30S	10	●	029	6839098	11,31
CCMT09T304-RP4	WPP10G	10	●	029	8204223	11,65
CCMT09T304-RP4	WPP10S	10	■	029	6443239[1]	11,65
CCMT09T304-RP4	WPP20G	10	●	029	8204222	11,65
CCMT09T304-RP4	WPP20S	10	■	029	6449156[1]	11,65
CCMT09T304-RP4	WPP30G	10	●	029	8201082	11,65
CCMT09T304-RP4	WPP30S	10	■	029	6449157[1]	11,65
CCMT09T308-E47	WPP20S	10	●	019	7077852	11,31
CCMT09T308-E47	WSM20S	10	●	019	7077853	11,31
CCMT09T308-E47	WSM30S	10	●	019	7077854	11,31
CCMT09T308-FK6	WKK10S	10	●	029	6733978	11,31
CCMT09T308-FK6	WKK20S	10	●	029	6733977	11,31
CCMT09T308-FM4	WMP20S	10	●	029	6463968	11,31
CCMT09T308-FM4	WSM01	10	●	029	8190163	11,65
CCMT09T308-FM4	WSM10S	10	●	029	6839036	11,31
CCMT09T308-FM4	WSM20S	10	●	029	6839037	11,31
CCMT09T308-FM4	WSM30S	10	●	029	6839038	11,31
CCMT09T308-FM6	WSM20S	10	●	029	7054135	11,31
CCMT09T308-FM6	WSM30S	10	●	029	7054136	11,31
CCMT09T308-FP4	WEP10C	10	●	029	7425456	10,17
CCMT09T308-FP4	WKP01G	10	●	029	8422866	11,65
CCMT09T308-FP4	WPP10G	10	●	029	8204225	11,65
CCMT09T308-FP4	WPP10S	10	■	029	6435494[1]	11,65
CCMT09T308-FP4	WPP20G	10	●	029	8204224	11,65
CCMT09T308-FP4	WPP20S	10	■	029	6439427[1]	11,65
CCMT09T308-FP6	WPP10G	10	●	029	8204227	11,65
CCMT09T308-FP6	WPP10S	10	■	029	6730390[1]	11,65
CCMT09T308-FP6	WPP20G	10	●	029	8204226	11,65
CCMT09T308-FP6	WPP20S	10	■	029	6730369[1]	11,65
CCMT09T308-FW4	WKP01G	10	●	029	8422860	13,43
CCMT09T308-FW4	WPP10G	10	●	029	8296370	13,43
CCMT09T308-FW4	WPP20G	10	●	029	8296371	13,43
CCMT09T308-FW4	WSM10S	10	●	029	8296372	13,04
CCMT09T308-FW4	WSM20S	10	●	029	8296373	13,04
CCMT09T308-FW4	WSM30S	10	●	029	8296374	13,04
CCMT09T308-MK4	WKK10S	10	●	029	6485492	11,31
CCMT09T308-MK4	WKK20S	10	●	029	6421277	11,31
CCMT09T308-MM4	WMP20S	10	●	029	6636294	11,31
CCMT09T308-MM4	WSM01	10	●	029	8190173	11,65
CCMT09T308-MM4	WSM10S	10	●	029	6836818	11,31
CCMT09T308-MM4	WSM20S	10	●	029	6836817	11,31
CCMT09T308-MM4	WSM30S	10	●	029	7054174	11,31
CCMT09T308-MP4	WPP10G	10	●	029	8204228	11,65
CCMT09T308-MP4	WPP10S	10	■	029	6483822[1]	11,65
CCMT09T308-MP4	WPP20G	10	●	029	8201083	11,65
CCMT09T308-MP4	WPP20S	10	●	029	6296897[2]	11,65
CCMT09T308-MP6	WPP10G	10	●	029	8205072	11,65

Bezeichnung / Designation	Sorte / Grade	VE / US		Disc. Gr.	Article No.	EURO Stück / piece
CCMT09T308-MP6	WPP20G	10	●	029	8205073	11,65
CCMT09T308-MP6	WPP30G	10	●	029	8205074	11,65
CCMT09T308-MW4	WKK10S	10	●	029	8296292	13,04
CCMT09T308-MW4	WKK20S	10	●	029	8296293	13,04
CCMT09T308-MW4	WPP10G	10	●	029	8296294	13,43
CCMT09T308-MW4	WPP20G	10	●	029	8296295	13,43
CCMT09T308-MW4	WSM20S	10	●	029	8296296	13,04
CCMT09T308-PF	WPP10S	10	■	029	6780272[1]	13,43
CCMT09T308-PF	WPP20S	10	■	029	6965692[1]	13,43
CCMT09T308-PF	WSM20S	10	●	029	7054095[1]	13,04
CCMT09T308-PF	WSM30S	10	■	029	7054096[1]	13,04
CCMT09T308-PF4	WPP01	10	■	029	5262945[1]	11,65
CCMT09T308-PM	WKK10S	10	●	029	6780250[1]	13,04
CCMT09T308-PM	WKK20S	10	■	029	6780251[1]	13,04
CCMT09T308-PM	WPP20S	10	■	029	6780252[1]	13,43
CCMT09T308-PM5	WAK20	10	●	029	5022073	11,31
CCMT09T308-PM5	WPP20	10	■	029	5199633[1]	11,65
CCMT09T308-PM5	WPP30	10	■	029	5199635[1]	11,65
CCMT09T308-PM5	WSM20	10	●	029	5614916	11,31
CCMT09T308-PM5	WSM30	10	●	029	5354788	11,31
CCMT09T308-RK4	WKK10S	10	●	029	6650914	11,31
CCMT09T308-RK4	WKK20S	10	●	029	6650915	11,31
CCMT09T308-RM4	WMP20S	10	●	029	6461380	11,31
CCMT09T308-RM4	WSM10S	10	●	029	6839099	11,31
CCMT09T308-RM4	WSM20S	10	●	029	6839100	11,31
CCMT09T308-RM4	WSM30S	10	●	029	6839101	11,31
CCMT09T308-RP4	WPP10G	10	●	029	8204231	11,65
CCMT09T308-RP4	WPP10S	10	■	029	6443278[1]	11,65
CCMT09T308-RP4	WPP20G	10	●	029	8204230	11,65
CCMT09T308-RP4	WPP20S	10	●	029	6449158[2]	11,65
CCMT09T308-RP4	WPP30G	10	●	029	8204229	11,65
CCMT09T308-RP4	WPP30S	10	●	029	6449159[2]	11,65
CCMT09T312-MW4	WKK20S	10	●	029	8296297	13,04
CCMT09T312-MW4	WPP20G	10	●	029	8296298	13,43
CCMT09T312-PM	WKK10S	10	■	029	6965694[1]	13,04
CCMT09T312-PM	WKK20S	10	●	029	6780253[1]	13,04
CCMT09T312-PM	WPP20S	10	■	029	6780254[1]	13,43
CCMT120404-E47	WPP20S	10	●	019	7077855	16,18
CCMT120404-E47	WSM20S	10	●	019	7077856	16,18
CCMT120404-E47	WSM30S	10	●	019	7077857	16,18
CCMT120404-FK6	WKK20S	10	●	029	6733979	16,18
CCMT120404-FM4	WSM10S	10	●	029	6917247	16,18
CCMT120404-FM4	WSM20S	10	●	029	6917248	16,18
CCMT120404-FM4	WSM30S	10	●	029	6917249	16,18
CCMT120404-FP4	WKP01G	10	●	029	8422867	16,66
CCMT120404-FP4	WPP10G	10	●	029	8204233	16,66
CCMT120404-FP4	WPP20G	10	●	029	8204232	16,66
CCMT120404-FP6	WPP20G	10	●	029	8204234	16,66
CCMT120404-MK4	WKK10S	10	●	029	6485498	16,18
CCMT120404-MK4	WKK20S	10	●	029	6485355	16,18
CCMT120404-MM4	WMP20S	10	●	029	7156980	16,18
CCMT120404-MM4	WSM20S	10	●	029	6836819	16,18
CCMT120404-MP4	WPP10G	10	●	029	8204236	16,66
CCMT120404-MP4	WPP20G	10	●	029	8204235	16,66
CCMT120404-MP4	WPP20S	10	■	029	6427163[1]	16,66
CCMT120404-MW4	WKK20S	10	●	029	8296299	18,60
CCMT120404-MW4	WPP20G	10	●	029	8296300	19,17
CCMT120404-PF4	WPP01	10	■	029	5262946[1]	16,66
CCMT120404-PM	WAK20	10	■	029	5043274[1]	18,60
CCMT120404-PM5	WAM30	10	●	029	5022101	16,59
CCMT120404-RK4	WKK10S	10	●	029	6650916	16,18
CCMT120404-RK4	WKK20S	10	●	029	6650917	16,18
CCMT120404-RM4	WMP20S	10	●	029	6461776	16,18
CCMT120404-RM4	WSM10S	10	●	029	6839102	16,18
CCMT120404-RM4	WSM20S	10	●	029	6839103	16,18
CCMT120404-RM4	WSM30S	10	●	029	6839104	16,18
CCMT120404-RP4	WPP10G	10	●	029	8204239	16,66
CCMT120404-RP4	WPP20G	10	●	029	8204238	16,66
CCMT120404-RP4	WPP20S	10	■	029	6449160[1]	16,66
CCMT120404-RP4	WPP30G	10	●	029	8204237	16,66

Bezeichnung / Designation	Sorte / Grade	VE / US		Disc. Gr.	Article No.	EURO Stück / piece
CCMT120408-E47	WPP20S	10	●	019	7077858	16,18
CCMT120408-E47	WSM20S	10	●	019	7077859	16,18
CCMT120408-E47	WSM30S	10	●	019	7077860	16,18
CCMT120408-FK6	WKK10S	10	●	029	6733982	16,18
CCMT120408-FK6	WKK20S	10	●	029	6733981	16,18
CCMT120408-FM4	WSM10S	10	●	029	6917250	16,18
CCMT120408-FM4	WSM20S	10	●	029	6917251	16,18
CCMT120408-FM4	WSM30S	10	●	029	6917252	16,18
CCMT120408-FM6	WSM20S	10	●	029	7054137	16,18
CCMT120408-FM6	WSM30S	10	●	029	7054138	16,18
CCMT120408-FP4	WPP10G	10	●	029	8204241	16,66
CCMT120408-FP4	WPP20G	10	●	029	8204240	16,66
CCMT120408-FP4	WPP20S	10	■	029	6439441[1]	16,66
CCMT120408-FP6	WPP20G	10	●	029	8204242	16,66
CCMT120408-MK4	WKK10S	10	●	029	6485500	16,18
CCMT120408-MK4	WKK20S	10	●	029	6485382	16,18
CCMT120408-MM4	WMP20S	10	●	029	7156649	16,18
CCMT120408-MM4	WSM10S	10	●	029	6836821	16,18
CCMT120408-MM4	WSM20S	10	●	029	6836820	16,18
CCMT120408-MP4	WPP10G	10	●	029	8204244	16,66
CCMT120408-MP4	WPP20G	10	●	029	8204243	16,66
CCMT120408-MP4	WPP20S	10	■	029	6427219[1]	16,66
CCMT120408-MP6	WPP10G	10	●	029	8205075	16,66
CCMT120408-MP6	WPP20G	10	●	029	8205076	16,66
CCMT120408-MP6	WPP30G	10	●	029	8205077	16,66
CCMT120408-MW4	WKK20S	10	●	029	8296301	18,60
CCMT120408-MW4	WPP10G	10	●	029	8296302	19,17
CCMT120408-MW4	WPP20G	10	●	029	8296303	19,17
CCMT120408-MW4	WSM20S	10	●	029	8296304	18,60
CCMT120408-PM	WKK20S	10	■	029	6780256[1]	18,60
CCMT120408-PM	WPP20S	10	■	029	6780257[1]	19,17
CCMT120408-PM5	WAK20	10	●	029	5022077	16,18
CCMT120408-PM5	WPP20	10	■	029	5199660[1]	16,66
CCMT120408-PM5	WSM30	10	●	029	5356962	16,18
CCMT120408-RK4	WKK10S	10	●	029	6650918	16,18
CCMT120408-RK4	WKK20S	10	●	029	6650919	16,18
CCMT120408-RM4	WMP20S	10	●	029	6461793	16,18
CCMT120408-RM4	WSM10S	10	●	029	6839105	16,18
CCMT120408-RM4	WSM20S	10	●	029	6839106	16,18
CCMT120408-RM4	WSM30S	10	●	029	6839107	16,18
CCMT120408-RP4	WPP10G	10	●	029	8204246	16,66
CCMT120408-RP4	WPP10S	10	■	029	6444070[1]	16,66
CCMT120408-RP4	WPP20G	10	●	029	8201084	16,66
CCMT120408-RP4	WPP20S	10	●	029	6449162[2]	16,66
CCMT120408-RP4	WPP30G	10	●	029	8204245	16,66
CCMT120408-RP4	WPP30S	10	●	029	6449163[2]	16,66
CCMT120412-E47	WPP20S	10	●	019	7077861	16,18
CCMT120412-E47	WSM20S	10	●	019	7077862	16,18
CCMT120412-MW4	WPP20G	10	●	029	8296305	19,17
CCMT120412-RK4	WKK10S	10	●	029	6650920	16,18
CCMT120412-RK4	WKK20S	10	●	029	6650921	16,18
CCMT120412-RM4	WMP20S	10	●	029	6707925	16,18
CCMT120412-RM4	WSM20S	10	●	029	6839108	16,18
CCMT120412-RM4	WSM30S	10	●	029	6839109	16,18
CCMT120412-RP4	WPP10G	10	●	029	8204249	16,66
CCMT120412-RP4	WPP20G	10	●	029	8204247	16,66
CCMT120412-RP4	WPP20S	10	■	029	6449165[1]	16,66
CCMT120412-RP4	WPP30G	10	●	029	8204248	16,66
CCMT160508	WK1	10	●	029	5009974	20,12
CCMT160508-MP6	WPP20G	10	●	029	8205096	27,40
CCMT160508-MP6	WPP30G	10	●	029	8205097	27,40
CCMW060202-RK6	WKK10S	10	■	029	6651467[1]	9,71
CCMW060202-RK6	WKK20S	10	●	029	6651468	9,71
CCMW060204	WCB50	1	●	023	5043797	54,90
CCMW060204-2	WCB50	1	●	023	5202144	79,40
CCMW060204-RK6	WKK10S	10	●	029	6651469	9,71
CCMW060204-RK6	WKK20S	10	●	029	6651530	9,71
CCMW060208-RK6	WKK10S	10	●	029	6651531	9,71
CCMW060208-RK6	WKK20S	10	●	029	6651532	9,71
CCMW09T304-RK6	WKK10S	10	●	029	6651533	11,31

Bezeichnung / Designation	Sorte / Grade	VE / US		Disc. Gr.	Article No.	EURO Stück / piece
CCMW09T304-RK6	WKK20S	10	●	029	6651534	11,31
CCMW09T308-RK6	WKK10S	10	●	029	6651535	11,31
CCMW09T308-RK6	WKK20S	10	●	029	6651536	11,31
CCMW120408-RK6	WKK20S	10	●	029	6651539	16,18
CCMW120412-RK6	WKK20S	10	●	029	6651540	16,18
CN1000-M4-1		1	●	095	8158980	58,60
CN3000-25-8.5		1	●	095	8143143	23,86
CN3000-32-8.5		1	●	095	8143144	29,80
CN3000-40-11.5		1	●	095	8143145	33,70
CN3001-M8-G1/4		1	●	095	7941807	27,00
CNGA120404EM-2	WBS10	2	●	023	7636795	71,70
CNGA120404SM-MWS	WCH10C	10	●	024	8064396	19,63
CNGA120404SM-S	WCH10C	10	●	024	8064395	17,84
CNGA120404TM-2	WBH10	2	●	023	7636749	68,10
CNGA120404TM-2	WBH10C	2	●	023	7636790	74,90
CNGA120404TM-2	WBH20	2	●	023	7636791	68,10
CNGA120404TM-2	WBH20C	2	●	023	8306521	74,90
CNGA120404TM-2	WBH30	2	●	023	8060805	68,10
CNGA120404TM-M2	WBH10	2	●	023	7636794	74,90
CNGA120404TM-MW2	WBH10C	2	●	023	7636793	82,40
CNGA120404TS-2	WBK20	2	●	023	7823815	68,10
CNGA120408EM-2	WBS10	2	●	023	7636802	71,70
CNGA120408SM-MWS	WCH10C	10	●	024	8064398	19,63
CNGA120408SM-S	WCH10C	10	●	024	8064397	17,84
CNGA120408T02020	WCK10	10	●	024	7349602	24,96
CNGA120408TM-2	WBH10	2	●	023	7636796	68,10
CNGA120408TM-2	WBH10C	2	●	023	7636797	74,90
CNGA120408TM-2	WBH20	2	●	023	7636798	68,10
CNGA120408TM-2	WBH20C	2	●	023	8306522	74,90
CNGA120408TM-2	WBH30	2	●	023	8060806	68,10
CNGA120408TM-4	WBH20C	2	●	023	8306523	123,00
CNGA120408TM-M2	WBH10	2	●	023	7636801	74,90
CNGA120408TM-M2	WBH20C	2	●	023	8306524	82,40
CNGA120408TM-MW2	WBH10	2	●	023	7636799	74,90
CNGA120408TM-MW2	WBH10C	2	●	023	7636800	82,40
CNGA120408TM-MW2	WBH20C	2	●	023	8306525	82,40
CNGA120408TM-MW2	WBH30	2	●	023	8060808	74,90
CNGA120408TS-2	WBK20	2	●	023	7823816	68,10
CNGA120412SM-MWS	WCH10C	10	●	024	8064410	19,63
CNGA120412SM-S	WCH10C	10	●	024	8064399	17,84
CNGA120412T02020	WCK10	10	●	024	7349603	24,96
CNGA120412TM-2	WBH10	2	●	023	7636803	68,10
CNGA120412TM-2	WBH10C	2	●	023	7636804	74,90
CNGA120412TM-2	WBH20	2	●	023	7636805	68,10
CNGA120412TM-2	WBH20C	2	●	023	8306526	74,90
CNGA120412TM-2	WBH30	2	●	023	8060807	68,10
CNGA120412TM-M2	WBH10	2	●	023	7636808	74,90
CNGA120412TM-MW2	WBH10	2	●	023	7636806	74,90
CNGA120412TM-MW2	WBH10C	2	●	023	7636807	82,40
CNGA120412TM-MW2	WBH30	2	●	023	8060809	74,90
CNGA120412TS-2	WBK20	2	●	023	7823818	68,10
CNGA120416T02020	WCK10	10	●	024	7349604	24,96
CNGG120401-MS3	WSM01	10	●	027	7021455	21,62
CNGG120402-MS3	WSM01	10	●	027	7021456	21,62
CNGG120402M-MN3	WN10	10	●	028	7749890	16,00
CNGG120402M-MN3	WNN10	10	●	028	7778097	22,39
CNGG120404-MS3	WSM01	10	●	027	7021457	21,62
CNGG120404-NFT	WS10	10	●	027	5595811	16,00
CNGG120404M-MN3	WN10	10	●	028	7749891	16,00
CNGG120404M-MN3	WNN10	10	●	028	7778098	22,39
CNGG120408-MS3	WSM01	10	●	027	7021458	21,62
CNGG120408-NFT	WS10	10	●	027	5592245	16,00
CNGG120408M-MN3	WN10	10	●	028	7749892	16,00
CNGG120408M-MN3	WNN10	10	●	028	7778099	22,39
CNGN120408T01020	WWS20	10	●	024	6606657	35,30
CNGN120408TM-S	WBK30	2	●	023	7980648	209,00
CNGN120412T01020	WWS20	10	●	024	6606658	35,30
CNGN120412TM-S	WBK30	2	●	023	7823817	209,00
CNGN120416TM-S	WBK30	2	●	023	7823819	209,00
CNGN120708T01020	WIS10	10	●	024	6188128	22,11

Bezeichnung / Designation	Sorte / Grade	VE / US		Disc. Gr.	Article No.	EURO Stück / piece
CNGN120708T01020	WIS30	10	●	024	8376877	22,11
CNGN120708T01020	WWS20	10	●	024	6188977	39,40
CNGN120712T01020	WIS10	10	●	024	6188145	22,11
CNGN120712T01020	WIS30	10	●	024	8376878	22,11
CNGN120712T01020	WWS20	10	●	024	6188978	39,40
CNGN120712T02020	WCK10	10	●	024	7349608	28,70
CNGN120716T01020	WIS10	10	●	024	6188147	22,11
CNGN120716T01020	WIS30	10	●	024	8376879	22,11
CNGN120716T01020	WWS20	10	●	024	6189011	39,40
CNGX120716T02020	WCK10	10	●	024	7349621[1]	28,70
CNHQ0805PPN-A57T	WKP35S	10	●	009	5918295	30,00
CNHU0805PPN-D57T	WKP25S	10	●	009	7028016	33,10
CNHU0805PPN-D57T	WKP35S	10	●	009	5918298	33,10
CNHU0805PPN-D57T	WSP45G	10	●	009	8112849	34,80
CNHU1206PPN-D57T	WKP25S	10	●	009	7028017	36,20
CNHU1206PPN-D57T	WKP35S	10	●	009	5918299	36,20
CNHU1206PPN-D57T	WSP45G	10	●	009	8112850	38,00
CNMA120404-RK5	WKK10S	10	●	027	6412013	14,01
CNMA120404-RK5	WKK20S	10	●	027	6388148	14,01
CNMA120408-2	WCB50	1	●	023	5202099	79,40
CNMA120408-RK5	WKK10S	10	●	027	6412018	14,01
CNMA120408-RK5	WKK20S	10	●	027	6407565	14,01
CNMA120408-RK5	WSM01	10	●	027	6876678	14,42
CNMA120408-RK7	WKK10S	10	●	027	6435155	14,01
CNMA120408-RK7	WKK20S	10	●	027	6408501	14,01
CNMA120412	WAK10	10	●	027	5016223	14,01
CNMA120412-RK5	WKK10S	10	●	027	6412019	14,01
CNMA120412-RK5	WKK20S	10	●	027	6407660	14,01
CNMA120412-RK7	WKK10S	10	●	027	6435156	14,01
CNMA120412-RK7	WKK20S	10	●	027	6408669	14,01
CNMA120416-RK5	WKK10S	10	●	027	6412073	14,01
CNMA120416-RK5	WKK20S	10	●	027	6388258	14,01
CNMA120416-RK7	WKK10S	10	●	027	6435157	14,01
CNMA120416-RK7	WKK20S	10	●	027	6409240	14,01
CNMA160612-RK5	WKK10S	10	●	027	6412077	22,27
CNMA160612-RK5	WKK20S	10	●	027	6407662	22,27
CNMA160612-RK7	WKK10S	10	●	027	6435158	22,27
CNMA160612-RK7	WKK20S	10	●	027	6409244	22,27
CNMA160616-RK5	WKK10S	10	●	027	6412078	22,27
CNMA160616-RK5	WKK20S	10	●	027	6408083	22,27
CNMA160616-RK7	WKK10S	10	●	027	6435159	22,27
CNMA160616-RK7	WKK20S	10	●	027	6409247	22,27
CNMA190612-RK5	WKK20S	10	●	027	6388430	31,10
CNMA190616-RK5	WKK20S	10	●	027	6388747	31,10
CNMA190616-RK7	WKK10S	10	●	027	6435224	31,10
CNMA190616-RK7	WKK20S	10	●	027	6410161	31,10
CNMA190624-RK5	WKK20S	10	●	027	6388825	31,10
CNMG090304-FP5	WPP10G	10	●	027	8115413	9,45
CNMG090304-FP5	WPP20G	10	●	027	8115414	9,45
CNMG090304-MP3	WPP10G	10	●	027	8115638	9,45
CNMG090304-MP3	WPP20G	10	●	027	8115639	9,45
CNMG090308-FP5	WPP10G	10	●	027	8115596	9,45
CNMG090308-FP5	WPP20G	10	●	027	8115597	9,45
CNMG090308-MK5	WKK20S	10	●	027	6159622	9,16
CNMG090308-MP3	WPP10G	10	●	027	8115640	9,45
CNMG090308-MP3	WPP20G	10	●	027	8115641	9,45
CNMG090308-MP3	WPP30G	10	●	027	8115642	9,45
CNMG090308-MP3	WPP30S	10	■	027	7248322[2]	9,45
CNMG120402-FM5	WSM10S	10	●	027	7091883	14,01
CNMG120402-FM5	WSM20S	10	●	027	7091884	14,01
CNMG120402-FP5	WEP10C	10	●	027	8136980	12,61
CNMG120404-FM5	WMP20S	10	●	027	7091885	14,01
CNMG120404-FM5	WSM01	10	●	027	8461479	14,44
CNMG120404-FM5	WSM10S	10	●	027	7091886	14,01
CNMG120404-FM5	WSM20S	10	●	027	7091887	14,01
CNMG120404-FP5	WEP10C	10	●	027	8136981	12,61
CNMG120404-FP5	WKP01G	10	●	027	8422868	14,45
CNMG120404-FP5	WPP10G	10	●	027	8115598	14,45
CNMG120404-FP5	WPP10S	10	■	027	6059742[2]	14,45
CNMG120404-FP5	WPP20G	10	●	027	8115599	14,45

Bezeichnung / Designation	Sorte / Grade	VE / US		Disc. Gr.	Article No.	EURO Stück / piece
CNMG120404-FP5	WPP20S	10	■	027	6065855[2]	14,45
CNMG120404-FW5	WKP01G	10	●	027	8422869	16,54
CNMG120404-FW5	WPP10G	10	●	027	8115634	16,54
CNMG120404-FW5	WPP10S	10	■	027	7933292[2]	16,54
CNMG120404-FW5	WPP20G	10	●	027	8115635	16,54
CNMG120404-FW5	WPP20S	10	■	027	7933293[2]	16,54
CNMG120404-FW5	WSM10S	10	●	027	7933295	16,06
CNMG120404-FW5	WSM20S	10	●	027	7933294	16,06
CNMG120404-MK5	WKK10S	10	●	027	6353138	14,01
CNMG120404-MK5	WKK20S	10	●	027	6120845	14,01
CNMG120404-MM5	WMP20S	10	●	027	7376524	14,01
CNMG120404-MM5	WSM10S	10	●	027	7251895	14,01
CNMG120404-MM5	WSM20S	10	●	027	7251896	14,01
CNMG120404-MM5	WSM30S	10	●	027	7251897	14,01
CNMG120404-MP3	WPP10G	10	●	027	8115557	14,45
CNMG120404-MP3	WPP10S	10	■	027	6059691[2]	14,45
CNMG120404-MP3	WPP20G	10	●	027	8115558	14,45
CNMG120404-MP3	WPP20S	10	■	027	6064364[2]	14,45
CNMG120404-MP3	WPP30G	10	●	027	8115559	14,45
CNMG120404-MP5	WPP10G	10	●	027	8115565	14,45
CNMG120404-MP5	WPP10S	10	■	027	6180696[2]	14,45
CNMG120404-MP5	WPP20G	10	●	027	8115566	14,45
CNMG120404-MP5	WPP20S	10	■	027	6145572[2]	14,45
CNMG120404-MP5	WPP30G	10	●	027	8115567	14,45
CNMG120404-MS3	WMP20S	10	●	027	7903793	14,01
CNMG120404-MS3	WPP20G	10	●	027	8259882	14,45
CNMG120404-MS3	WS10	10	●	027	6890494	10,65
CNMG120404-MS3	WSM01	10	●	027	6890870	14,42
CNMG120404-MS3	WSM10S	10	●	027	6890822	14,01
CNMG120404-MS3	WSM20S	10	●	027	6890843	14,01
CNMG120404-MS3	WSM30S	10	●	027	7469057	14,01
CNMG120404-MU5	WMP20S	10	●	027	7894979	14,01
CNMG120404-MU5	WPP10G	10	●	027	8115662	14,45
CNMG120404-MU5	WPP20G	10	●	027	8115663	14,45
CNMG120404-MU5	WSM20S	10	●	027	7895050	14,01
CNMG120404-NF	WPP01	10	■	027	5262636[2]	16,54
CNMG120404-NF4	WSM10	10	●	027	5847591	14,01
CNMG120404-NFT	WS10	10	●	027	5691411	10,65
CNMG120404-NFT	WSM20S	10	●	027	7053961	14,01
CNMG120404-NM4	WAM30	10	●	027	5016693	14,35
CNMG120404-NM4	WPP20	10	■	027	5092380[2]	14,45
CNMG120404-NM4	WPP20G	10	●	027	8368239[2]	14,45
CNMG120404-NM4	WSM30	10	●	027	5354463	14,01
CNMG120404-NMS	WSM01	10	●	027	6876743	14,42
CNMG120404-NMS	WSM10	10	●	027	5907341	14,01
CNMG120404-NMS	WSM10S	10	●	027	7053818	14,01
CNMG120404-NMS	WSM20S	10	●	027	7053819	14,01
CNMG120404-NMS	WSM30S	10	●	027	7053840	14,01
CNMG120408-FM5	WMP20S	10	●	027	7091888	14,01
CNMG120408-FM5	WSM01	10	●	027	8461480	14,44
CNMG120408-FM5	WSM10S	10	●	027	7091889	14,01
CNMG120408-FM5	WSM20S	10	●	027	7091900	14,01
CNMG120408-FP5	WEP10C	10	●	027	8136982	12,61
CNMG120408-FP5	WKP01G	10	●	027	8422871	14,45
CNMG120408-FP5	WPP10G	10	●	027	8115630	14,45
CNMG120408-FP5	WPP10S	10	■	027	6057714[2]	14,45
CNMG120408-FP5	WPP20G	10	●	027	8115631	14,45
CNMG120408-FP5	WPP20S	10	■	027	6065856[2]	14,45
CNMG120408-FW5	WKP01G	10	●	027	8422870	16,54
CNMG120408-FW5	WPP10G	10	●	027	8115636	16,54
CNMG120408-FW5	WPP10S	10	■	027	7933296[2]	16,54
CNMG120408-FW5	WPP20G	10	●	027	8115637	16,54
CNMG120408-FW5	WSM10S	10	●	027	7933299	16,06
CNMG120408-FW5	WSM20S	10	●	027	7933298	16,06
CNMG120408-MK5	WKK10S	10	●	027	6353139	14,01
CNMG120408-MK5	WKK20S	10	●	027	6120889	14,01
CNMG120408-MK5	WKP30S	10	●	027	7268641	14,01
CNMG120408-MM5	WMP20S	10	●	027	7376525	14,01
CNMG120408-MM5	WSM10S	10	●	027	7251898	14,01
CNMG120408-MM5	WSM20S	10	●	027	7251899	14,01

Bezeichnung / Designation	Sorte / Grade	VE / US		Disc. Gr.	Article No.	EURO Stück / piece
CNMG120408-MM5	WSM30S	10	●	027	7251920	14,01
CNMG120408-MP3	WPP05G	10	●	027	8411263	14,45
CNMG120408-MP3	WPP05S	10	■	027	6613404[1]	14,45
CNMG120408-MP3	WPP10G	10	●	027	8115643	14,45
CNMG120408-MP3	WPP10S	10	●	027	6059692[2]	14,45
CNMG120408-MP3	WPP20G	10	●	027	8115644	14,45
CNMG120408-MP3	WPP20S	10	■	027	6059695[1]	14,45
CNMG120408-MP3	WPP30G	10	●	027	8115645	14,45
CNMG120408-MP5	WKK10S	10	●	027	6876473	14,01
CNMG120408-MP5	WPP05G	10	●	027	8411265	14,45
CNMG120408-MP5	WPP05S	10	■	027	6613488[1]	14,45
CNMG120408-MP5	WPP10G	10	●	027	8115568	14,45
CNMG120408-MP5	WPP10S	10	●	027	6059642[2]	14,45
CNMG120408-MP5	WPP20G	10	●	027	8115569	14,45
CNMG120408-MP5	WPP20S	10	●	027	6059643[2]	14,45
CNMG120408-MP5	WPP30G	10	●	027	8115570	14,45
CNMG120408-MP5	WPP30S	10	■	027	6059644[1]	14,45
CNMG120408-MS3	WMP20S	10	●	027	7903794	14,01
CNMG120408-MS3	WPP10G	10	●	027	8115574	14,45
CNMG120408-MS3	WPP20G	10	●	027	8115575	14,45
CNMG120408-MS3	WSM01	10	●	027	6890871	14,42
CNMG120408-MS3	WSM10S	10	●	027	6890823	14,01
CNMG120408-MS3	WSM20S	10	●	027	6890844	14,01
CNMG120408-MS3	WSM30S	10	●	027	7469058	14,01
CNMG120408-MU5	WMP20S	10	●	027	7560026	14,01
CNMG120408-MU5	WPP05G	10	●	027	8411268	14,45
CNMG120408-MU5	WPP05S	10	■	027	7640085[1]	14,45
CNMG120408-MU5	WPP10G	10	●	027	8115665	14,45
CNMG120408-MU5	WPP20G	10	●	027	8115666	14,45
CNMG120408-MU5	WPP20S	10	■	027	7560025[1]	14,45
CNMG120408-MU5	WSM20S	10	●	027	7560027	14,01
CNMG120408-MW5	WKK10S	10	●	027	7941429	16,06
CNMG120408-MW5	WKK20S	10	●	027	7941500	16,06
CNMG120408-MW5	WMP20S	10	●	027	7941504	16,06
CNMG120408-MW5	WPP05G	10	●	027	8411433	16,54
CNMG120408-MW5	WPP05S	10	■	027	7941501[1]	16,54
CNMG120408-MW5	WPP10G	10	●	027	8115677	16,54
CNMG120408-MW5	WPP10S	10	■	027	7941502[1]	16,54
CNMG120408-MW5	WPP20G	10	●	027	8115678	16,54
CNMG120408-MW5	WPP20S	10	■	027	7941503[1]	16,54
CNMG120408-NF4	WSM10	10	●	027	5847592	14,01
CNMG120408-NFT	WS10	10	●	027	5381296	10,65
CNMG120408-NFT	WSM20S	10	●	027	7053962	14,01
CNMG120408-NM4	WAM20	10	●	027	5016238	14,35
CNMG120408-NM4	WAM30	10	●	027	5016694	14,35
CNMG120408-NM4	WPP20	10	■	027	5092383[1]	14,45
CNMG120408-NM4	WPP20G	10	●	027	8369450[1]	14,45
CNMG120408-NM4	WSM10	10	●	027	5847078	14,01
CNMG120408-NM4	WSM20	10	●	027	5585398	14,01
CNMG120408-NM4	WSM30	10	●	027	5354465	14,01
CNMG120408-NM5	WAK10	10	●	027	5016661	14,01
CNMG120408-NM5	WAK20	10	●	027	5016662	14,01
CNMG120408-NM6	WPP20	10	■	027	5092674[1]	14,45
CNMG120408-NMS	WSM01	10	●	027	6876740	14,42
CNMG120408-NMS	WSM10	10	●	027	5866880	14,01
CNMG120408-NMS	WSM10S	10	●	027	7053841	14,01
CNMG120408-NMS	WSM20S	10	●	027	7053842	14,01
CNMG120408-NMS	WSM30S	10	●	027	7053843	14,01
CNMG120408-NMT	WS10	10	●	027	5330145	10,65
CNMG120408-NMT	WSM20S	10	●	027	7053975	14,01
CNMG120408-NR4	WAM20	10	●	027	5016872	14,35
CNMG120408-NR4	WAM30	10	●	027	5016873	14,35
CNMG120408-NR4	WMP20S	10	●	027	6433743	14,01
CNMG120408-NR4	WSM20	10	●	027	5585561	14,01
CNMG120408-NR4	WSM30	10	●	027	5354448	14,01
CNMG120408-NRS	WMP20S	10	●	027	7469076	14,01
CNMG120408-NRS	WSM01	10	●	027	6876677	14,42
CNMG120408-NRS	WSM10	10	●	027	5866883	14,01
CNMG120408-NRS	WSM10S	10	●	027	7053900	14,01
CNMG120408-NRS	WSM20S	10	●	027	7053901	14,01

Bezeichnung / Designation	Sorte / Grade	VE / US		Disc. Gr.	Article No.	EURO Stück / piece
CNMG120408-NRS	WSM30S	10	●	027	7053902	14,01
CNMG120408-NRT	WS10	10	●	027	5409415	10,65
CNMG120408-NRT	WSM20S	10	●	027	7054016	14,01
CNMG120408-RM5	WMP20S	10	●	027	6944683	14,01
CNMG120408-RM5	WPP10G	10	●	027	8115576	14,45
CNMG120408-RM5	WPP20G	10	●	027	8115577	14,45
CNMG120408-RM5	WSM10S	10	●	027	6944734	14,01
CNMG120408-RM5	WSM20S	10	●	027	6944735	14,01
CNMG120408-RM5	WSM30S	10	●	027	6944736	14,01
CNMG120408-RP5	WKK10S	10	●	027	6568159	14,01
CNMG120408-RP5	WKK20S	10	●	027	6341917	14,01
CNMG120408-RP5	WPP05G	10	●	027	8411435	14,45
CNMG120408-RP5	WPP05S	10	■	027	6613525[1]	14,45
CNMG120408-RP5	WPP10G	10	●	027	8115578	14,45
CNMG120408-RP5	WPP10S	10	●	027	6059598[2]	14,45
CNMG120408-RP5	WPP20G	10	●	027	8115579	14,45
CNMG120408-RP5	WPP20S	10	●	027	6059599[2]	14,45
CNMG120408-RP5	WPP30G	10	●	027	8115580	14,45
CNMG120408-RP5	WPP30S	10	■	027	6059610[1]	14,45
CNMG120408-RP7	WKP30S	10	●	027	6930004	14,01
CNMG120408-RP7	WPP10G	10	●	027	8115590	14,45
CNMG120408-RP7	WPP10S	10	■	027	6815739[1]	14,45
CNMG120408-RP7	WPP20G	10	●	027	8115591	14,45
CNMG120408-RP7	WPP20S	10	■	027	6815800[1]	14,45
CNMG120408-RP7	WPP30G	10	●	027	8115592	14,45
CNMG120408-RP7	WPP30S	10	■	027	6815801[1]	14,45
CNMG120412-FM5	WSM20S	10	●	027	7091901	14,01
CNMG120412-FP5	WPP10G	10	●	027	8115632	14,45
CNMG120412-FP5	WPP20G	10	●	027	8115633	14,45
CNMG120412-MK5	WKK10S	10	●	027	6353300	14,01
CNMG120412-MK5	WKK20S	10	●	027	6121040	14,01
CNMG120412-MK5	WKP30S	10	●	027	7268642	14,01
CNMG120412-MM5	WMP20S	10	●	027	7376526	14,01
CNMG120412-MM5	WSM10S	10	●	027	7251921	14,01
CNMG120412-MM5	WSM20S	10	●	027	7251922	14,01
CNMG120412-MM5	WSM30S	10	●	027	7251923	14,01
CNMG120412-MP3	WPP05G	10	●	027	8411264	14,45
CNMG120412-MP3	WPP05S	10	■	027	6613405[1]	14,45
CNMG120412-MP3	WPP10G	10	●	027	8115646	14,45
CNMG120412-MP3	WPP10S	10	■	027	6064247[1]	14,45
CNMG120412-MP3	WPP20G	10	●	027	8115647	14,45
CNMG120412-MP3	WPP20S	10	■	027	6064368[1]	14,45
CNMG120412-MP3	WPP30G	10	●	027	8115648	14,45
CNMG120412-MP5	WPP05G	10	●	027	8411266	14,45
CNMG120412-MP5	WPP05S	10	■	027	6613489[1]	14,45
CNMG120412-MP5	WPP10G	10	●	027	8115571	14,45
CNMG120412-MP5	WPP10S	10	■	027	6067218[1]	14,45
CNMG120412-MP5	WPP20G	10	●	027	8115572	14,45
CNMG120412-MP5	WPP20S	10	■	027	6067217[1]	14,45
CNMG120412-MP5	WPP30G	10	●	027	8115573	14,45
CNMG120412-MP5	WPP30S	10	■	027	6067219[1]	14,45
CNMG120412-MS3	WMP20S	10	●	027	7903799	14,01
CNMG120412-MS3	WPP20G	10	●	027	8115661	14,45
CNMG120412-MS3	WSM01	10	●	027	7903795	14,42
CNMG120412-MS3	WSM10S	10	●	027	7903796	14,01
CNMG120412-MS3	WSM20S	10	●	027	7903797	14,01
CNMG120412-MU5	WMP20S	10	●	027	7560030	14,01
CNMG120412-MU5	WPP05G	10	●	027	8411269	14,45
CNMG120412-MU5	WPP05S	10	■	027	7640086[1]	14,45
CNMG120412-MU5	WPP10G	10	●	027	8115668	14,45
CNMG120412-MU5	WPP20G	10	●	027	8115669	14,45
CNMG120412-MU5	WPP20S	10	■	027	7560029[1]	14,45
CNMG120412-MU5	WSM20S	10	●	027	7560031	14,01
CNMG120412-MW5	WKK10S	10	●	027	7941505	16,06
CNMG120412-MW5	WKK20S	10	●	027	7941506	16,06
CNMG120412-MW5	WMP20S	10	●	027	7941510	16,06
CNMG120412-MW5	WPP05G	10	●	027	8411434	16,54
CNMG120412-MW5	WPP05S	10	■	027	7941507[1]	16,54
CNMG120412-MW5	WPP10G	10	●	027	8115680	16,54
CNMG120412-MW5	WPP10S	10	■	027	7941508[1]	16,54

Bezeichnung / Designation	Sorte / Grade	VE / US		Disc. Gr.	Article No.	EURO Stück / piece
CNMG120412-MW5	WPP20G	10	●	027	8115681	16,54
CNMG120412-NM	WKK10S	10	●	027	6780200	16,06
CNMG120412-NM	WPP10S	10	■	027	6780202[1]	16,54
CNMG120412-NM4	WPP20	10	■	027	5092386[1]	14,45
CNMG120412-NM4	WPP20G	10	●	027	8369451[1]	14,45
CNMG120412-NM4	WSM20	10	●	027	5585400	14,01
CNMG120412-NM4	WSM30	10	■	027	5354461[1]	14,01
CNMG120412-NM5	WAK20	10	●	027	5016664	14,01
CNMG120412-NM6	WPP20	10	■	027	5092677[1]	14,45
CNMG120412-NMS	WSM10S	10	●	027	7053844	14,01
CNMG120412-NMS	WSM20S	10	●	027	7053845	14,01
CNMG120412-NMT	WS10	10	●	027	5829394	10,65
CNMG120412-NMT	WSM20S	10	●	027	7053976	14,01
CNMG120412-NR4	WAM30	10	●	027	5016876	14,35
CNMG120412-NR4	WMP20S	10	●	027	6433745	14,01
CNMG120412-NR4	WSM20	10	●	027	5585560	14,01
CNMG120412-NRS	WMP20S	10	●	027	7469077	14,01
CNMG120412-NRS	WSM01	10	●	027	7469071	14,42
CNMG120412-NRS	WSM10S	10	●	027	7053903	14,01
CNMG120412-NRS	WSM20S	10	●	027	7053904	14,01
CNMG120412-NRS	WSM30S	10	●	027	7053905	14,01
CNMG120412-NRT	WS10	10	●	027	5570037	10,65
CNMG120412-RM5	WMP20S	10	●	027	6944684	14,01
CNMG120412-RM5	WPP10G	10	●	027	8115682	14,45
CNMG120412-RM5	WPP20G	10	●	027	8115683	14,45
CNMG120412-RM5	WSM10S	10	●	027	6944737	14,01
CNMG120412-RM5	WSM20S	10	●	027	6944738	14,01
CNMG120412-RM5	WSM30S	10	●	027	6944739	14,01
CNMG120412-RP5	WKK10S	10	●	027	6568390	14,01
CNMG120412-RP5	WKK20S	10	●	027	6318168	14,01
CNMG120412-RP5	WPP05G	10	●	027	8411436	14,45
CNMG120412-RP5	WPP05S	10	●	027	6613526[1]	14,45
CNMG120412-RP5	WPP10G	10	●	027	8115581	14,45
CNMG120412-RP5	WPP10S	10	●	027	6059509[2]	14,45
CNMG120412-RP5	WPP20G	10	●	027	8115582	14,45
CNMG120412-RP5	WPP20S	10	●	027	6059561[2]	14,45
CNMG120412-RP5	WPP30G	10	●	027	8115583	14,45
CNMG120412-RP5	WPP30S	10	■	027	6059563[1]	14,45
CNMG120412-RP7	WKP30S	10	●	027	6930005	14,01
CNMG120412-RP7	WPP05G	10	●	027	8411442	14,45
CNMG120412-RP7	WPP10G	10	●	027	8115593	14,45
CNMG120412-RP7	WPP10S	10	■	027	6815802[1]	14,45
CNMG120412-RP7	WPP20G	10	●	027	8115594	14,45
CNMG120412-RP7	WPP20S	10	■	027	6815803[1]	14,45
CNMG120412-RP7	WPP30G	10	●	027	8115595	14,45
CNMG120412-RP7	WPP30S	10	■	027	6815804[1]	14,45
CNMG120416-MK5	WKK10S	10	●	027	6353364	14,01
CNMG120416-MK5	WKK20S	10	●	027	6123895	14,01
CNMG120416-MM5	WSM20S	10	●	027	7251924	14,01
CNMG120416-MM5	WSM30S	10	●	027	7251925	14,01
CNMG120416-MP5	WPP10G	10	●	027	8115649	14,45
CNMG120416-MP5	WPP20G	10	●	027	8115650	14,45
CNMG120416-MP5	WPP30G	10	●	027	8115651	14,45
CNMG120416-MP5	WPP30S	10	■	027	6180717[1]	14,45
CNMG120416-MU5	WPP05G	10	●	027	8411430	14,45
CNMG120416-MU5	WPP05S	10	■	027	7895051[1]	14,45
CNMG120416-MU5	WPP10G	10	●	027	8115671	14,45
CNMG120416-MU5	WPP20G	10	●	027	8115672	14,45
CNMG120416-RM5	WSM20S	10	●	027	6944740	14,01
CNMG120416-RM5	WSM30S	10	●	027	6944741	14,01
CNMG120416-RP5	WPP05G	10	●	027	8411437	14,45
CNMG120416-RP5	WPP05S	10	●	027	6613527[1]	14,45
CNMG120416-RP5	WPP10G	10	●	027	8115684	14,45
CNMG120416-RP5	WPP10S	10	■	027	6113680[1]	14,45
CNMG120416-RP5	WPP20G	10	●	027	8115685	14,45
CNMG120416-RP5	WPP20S	10	■	027	6064113[1]	14,45
CNMG120416-RP5	WPP30G	10	●	027	8115686	14,45
CNMG120416-RP7	WPP10G	10	●	027	8115710	14,45
CNMG120416-RP7	WPP20G	10	●	027	8115711	14,45
CNMG120416-RP7	WPP30G	10	●	027	8115712	14,45

Bezeichnung / Designation	Sorte / Grade	VE / US		Disc. Gr.	Article No.	EURO Stück / piece
CNMG160608-MK5	WKK10S	10	●	027	6353366	22,27
CNMG160608-MK5	WKK20S	10	●	027	6138785	22,27
CNMG160608-MM5	WMP20S	10	●	027	7376527	22,27
CNMG160608-MM5	WSM10S	10	●	027	7251926	22,27
CNMG160608-MM5	WSM20S	10	●	027	7251927	22,27
CNMG160608-MM5	WSM30S	10	●	027	7251928	22,27
CNMG160608-MP5	WPP10G	10	●	027	8115652	22,95
CNMG160608-MP5	WPP20G	10	●	027	8115653	22,95
CNMG160608-MP5	WPP20S	10	■	027	6255879[1]	22,95
CNMG160608-MP5	WPP30G	10	●	027	8115654	22,95
CNMG160608-MP5	WPP30S	10	■	027	6303756[1]	22,95
CNMG160608-NM4	WSM20	10	●	027	5584718	22,27
CNMG160608-RM5	WSM10S	10	●	027	7251095	22,27
CNMG160608-RM5	WSM20S	10	●	027	7251096	22,27
CNMG160608-RM5	WSM30S	10	●	027	7251097	22,27
CNMG160608-RP5	WPP10G	10	●	027	8115687	22,95
CNMG160608-RP5	WPP20G	10	●	027	8115688	22,95
CNMG160608-RP5	WPP20S	10	■	027	6176074[1]	22,95
CNMG160608-RP5	WPP30G	10	●	027	8115689	22,95
CNMG160608-RP7	WPP10G	10	●	027	8115713	22,95
CNMG160608-RP7	WPP20G	10	●	027	8115714	22,95
CNMG160608-RP7	WPP30G	10	●	027	8115715	22,95
CNMG160612-MK5	WKK10S	10	●	027	6353368	22,27
CNMG160612-MK5	WKK20S	10	●	027	6138983	22,27
CNMG160612-MK5	WKP30S	10	●	027	7268643	22,27
CNMG160612-MM5	WMP20S	10	●	027	7376528	22,27
CNMG160612-MM5	WSM10S	10	●	027	7251929	22,27
CNMG160612-MM5	WSM20S	10	●	027	7251930	22,27
CNMG160612-MM5	WSM30S	10	●	027	7251931	22,27
CNMG160612-MP5	WPP05G	10	●	027	8411267	22,95
CNMG160612-MP5	WPP05S	10	■	027	6613511[1]	22,95
CNMG160612-MP5	WPP10G	10	●	027	8115655	22,95
CNMG160612-MP5	WPP10S	10	■	027	6190872[1]	22,95
CNMG160612-MP5	WPP20G	10	●	027	8115656	22,95
CNMG160612-MP5	WPP20S	10	■	027	6136536[1]	22,95
CNMG160612-MP5	WPP30G	10	●	027	8115657	22,95
CNMG160612-MU5	WMP20S	10	●	027	7895057	22,27
CNMG160612-MU5	WPP05G	10	●	027	8411431	22,95
CNMG160612-MU5	WPP05S	10	■	027	7895054[1]	22,95
CNMG160612-MU5	WPP10G	10	●	027	8115674	22,95
CNMG160612-MU5	WPP20G	10	●	027	8115675	22,95
CNMG160612-MU5	WSM20S	10	●	027	7895058	22,27
CNMG160612-NR4	WAM30	10	●	027	5016882	22,82
CNMG160612-NRS	WMP20S	10	●	027	7469078	22,27
CNMG160612-NRS	WSM10	10	●	027	5907880	22,27
CNMG160612-NRS	WSM10S	10	●	027	7053906	22,27
CNMG160612-NRS	WSM20S	10	●	027	7053907	22,27
CNMG160612-NRS	WSM30S	10	●	027	7053908	22,27
CNMG160612-NRT	WS10	10	●	027	5638367	16,97
CNMG160612-RM5	WMP20S	10	●	027	7251098	22,27
CNMG160612-RM5	WSM10S	10	●	027	7251111	22,27
CNMG160612-RM5	WSM20S	10	●	027	7251112	22,27
CNMG160612-RM5	WSM30S	10	●	027	7251113	22,27
CNMG160612-RP5	WKK20S	10	●	027	6341918	22,27
CNMG160612-RP5	WPP05G	10	●	027	8411438	22,95
CNMG160612-RP5	WPP05S	10	●	027	6613528[1]	22,95
CNMG160612-RP5	WPP10G	10	●	027	8115690	22,95
CNMG160612-RP5	WPP10S	10	■	027	6247185[1]	22,95
CNMG160612-RP5	WPP20G	10	●	027	8115691	22,95
CNMG160612-RP5	WPP20S	10	■	027	6228094[1]	22,95
CNMG160612-RP5	WPP30G	10	●	027	8115692	22,95
CNMG160612-RP5	WPP30S	10	■	027	6247188[1]	22,95
CNMG160612-RP7	WKP30S	10	●	027	6930006	22,27
CNMG160612-RP7	WPP05G	10	●	027	8411443	22,95
CNMG160612-RP7	WPP10G	10	●	027	8115716	22,95
CNMG160612-RP7	WPP10S	10	■	027	6815811[1]	22,95
CNMG160612-RP7	WPP20G	10	●	027	8115717	22,95
CNMG160612-RP7	WPP20S	10	■	027	6815812[1]	22,95
CNMG160612-RP7	WPP30G	10	●	027	8115718	22,95
CNMG160616-MK5	WKK10S	10	●	027	6353369	22,27

Bezeichnung / Designation	Sorte / Grade	VE / US		Disc. Gr.	Article No.	EURO Stück / piece
CNMG160616-MK5	WKK20S	10	●	027	6144817	22,27
CNMG160616-MM5	WSM20S	10	●	027	7251932	22,27
CNMG160616-MM5	WSM30S	10	●	027	7251933	22,27
CNMG160616-MP5	WPP10G	10	●	027	8115658	22,95
CNMG160616-MP5	WPP10S	10	■	027	6130904*	22,95
CNMG160616-MP5	WPP20G	10	●	027	8115659	22,95
CNMG160616-MP5	WPP30G	10	●	027	8115660	22,95
CNMG160616-MU5	WPP05G	10	●	027	8411432	22,95
CNMG160616-MU5	WPP10G	10	●	027	8293417	22,95
CNMG160616-MU5	WPP20G	10	●	027	8293418	22,95
CNMG160616-NRS	WSM10S	10	●	027	7053909	22,27
CNMG160616-NRS	WSM20S	10	●	027	7053910	22,27
CNMG160616-RM5	WSM20S	10	●	027	7251117	22,27
CNMG160616-RM5	WSM30S	10	●	027	7251118	22,27
CNMG160616-RP5	WKK20S	10	●	027	6342040	22,27
CNMG160616-RP5	WPP05G	10	●	027	8411439	22,95
CNMG160616-RP5	WPP05S	10	■	027	6613529*	22,95
CNMG160616-RP5	WPP10G	10	●	027	8115693	22,95
CNMG160616-RP5	WPP10S	10	■	027	6150073*	22,95
CNMG160616-RP5	WPP20G	10	●	027	8115694	22,95
CNMG160616-RP5	WPP20S	10	■	027	6134271*	22,95
CNMG160616-RP5	WPP30G	10	●	027	8115695	22,95
CNMG160616-RP5	WPP30S	10	■	027	6150076*	22,95
CNMG160616-RP7	WKP30S	10	●	027	6930007	22,27
CNMG160616-RP7	WPP05G	10	●	027	8411444	22,95
CNMG160616-RP7	WPP10G	10	●	027	8115719	22,95
CNMG160616-RP7	WPP20G	10	●	027	8115720	22,95
CNMG160616-RP7	WPP30G	10	●	027	8115721	22,95
CNMG160624-RP5	WPP10G	10	●	027	8115696	22,95
CNMG160624-RP5	WPP20G	10	●	027	8115697	22,95
CNMG190608-NRS	WSM10S	10	●	027	7053911	31,10
CNMG190608-NRS	WSM20S	10	●	027	7053912	31,10
CNMG190608-RP5	WPP10G	10	●	027	8115698	32,10
CNMG190608-RP5	WPP20G	10	●	027	8115699	32,10
CNMG190608-RP5	WPP30G	10	●	027	8115700	32,10
CNMG190612-MK5	WKK10S	10	●	027	6356355	31,10
CNMG190612-MK5	WKK20S	10	●	027	6138535	31,10
CNMG190612-MS3	WSM01	10	●	027	7903820	32,00
CNMG190612-MS3	WSM20S	10	●	027	7903821	31,10
CNMG190612-NRS	WSM10S	10	●	027	7053913	31,10
CNMG190612-NRS	WSM20S	10	●	027	7053914	31,10
CNMG190612-RM5	WMP20S	10	●	027	7251119	31,10
CNMG190612-RM5	WSM10S	10	●	027	7251120	31,10
CNMG190612-RM5	WSM20S	10	●	027	7251121	31,10
CNMG190612-RM5	WSM30S	10	●	027	7251122	31,10
CNMG190612-RP5	WPP05G	10	●	027	8411440	32,10
CNMG190612-RP5	WPP05S	10	■	027	6613530*	32,10
CNMG190612-RP5	WPP10G	10	●	027	8115701	32,10
CNMG190612-RP5	WPP20G	10	●	027	8115702	32,10
CNMG190612-RP5	WPP20S	10	■	027	6228250*	32,10
CNMG190612-RP5	WPP30G	10	●	027	8115703	32,10
CNMG190612-RP5	WPP30S	10	■	027	6261460*	32,10
CNMG190612-RP7	WKP30S	10	●	027	6930008	31,10
CNMG190612-RP7	WPP10G	10	●	027	8115722	32,10
CNMG190612-RP7	WPP10S	10	■	027	6815817*	32,10
CNMG190612-RP7	WPP20G	10	●	027	8115723	32,10
CNMG190612-RP7	WPP30G	10	●	027	8115724	32,10
CNMG190616-MK5	WKK10S	10	●	027	6356402	31,10
CNMG190616-MK5	WKK20S	10	●	027	6144689	31,10
CNMG190616-NRT	WS10	10	●	027	5522005	23,69
CNMG190616-NRT	WSM20S	10	●	027	7054019	31,10
CNMG190616-RM5	WSM20S	10	●	027	7251125	31,10
CNMG190616-RM5	WSM30S	10	●	027	7251126	31,10
CNMG190616-RP5	WPP05G	10	●	027	8411441	32,10
CNMG190616-RP5	WPP10G	10	●	027	8115704	32,10
CNMG190616-RP5	WPP20G	10	●	027	8115705	32,10
CNMG190616-RP5	WPP20S	10	■	027	6130517*	32,10
CNMG190616-RP5	WPP30G	10	●	027	8115706	32,10
CNMG190616-RP7	WKP30S	10	●	027	6930009	31,10
CNMG190616-RP7	WPP05G	10	●	027	8411445	32,10

Bezeichnung / Designation	Sorte / Grade	VE / US		Disc. Gr.	Article No.	EURO Stück / piece
CNMG190616-RP7	WPP10G	10	●	027	8115725	32,10
CNMG190616-RP7	WPP20G	10	●	027	8115726	32,10
CNMG190616-RP7	WPP30G	10	●	027	8115727	32,10
CNMG190624-RP5	WPP10G	10	●	027	8115707	32,10
CNMG190624-RP5	WPP20G	10	●	027	8115708	32,10
CNMG250924-RP5	WPP20G	5	●	027	8115709	71,50
CNMG250924-RP7	WKP30S	5	●	027	6930010	69,40
CNMG250924-RP7	WPP20G	5	●	027	8115728	71,50
CNMG250924-RP7	WPP20S	5	■	027	6815823*	71,50
CNMM120408-HU3	WPP10G	10	●	027	8138259	14,44
CNMM120408-HU3	WPP20G	10	●	027	8138258	14,44
CNMM120408-HU3	WPP30G	10	●	027	8138320	14,44
CNMM120408-HU5	WMP20S	10	●	027	7752000	14,01
CNMM120408-HU5	WPP10G	10	●	027	8116180	14,44
CNMM120408-HU5	WPP20G	10	●	027	8116181	14,44
CNMM120408-HU5	WSM20S	10	●	027	7752003	14,01
CNMM120408-HU5	WSM30S	10	●	027	7752004	14,01
CNMM120408-NRF	WPP20S	10	■	027	6163948*	14,44
CNMM120412-HU3	WPP05G	10	●	027	8411447	14,44
CNMM120412-HU3	WPP10G	10	●	027	8138328	14,44
CNMM120412-HU3	WPP20G	10	●	027	8138329	14,44
CNMM120412-HU3	WPP30G	10	●	027	8138350	14,44
CNMM120412-HU5	WMP20S	10	●	027	7583836	14,01
CNMM120412-HU5	WPP10G	10	●	027	8116182	14,44
CNMM120412-HU5	WPP20G	10	●	027	8116183	14,44
CNMM120412-HU5	WSM20S	10	●	027	7583786	14,01
CNMM120412-HU5	WSM30S	10	●	027	7583787	14,01
CNMM120412-HU7	WPP10G	10	●	027	8138322	14,44
CNMM120412-HU7	WPP20G	10	●	027	8138321	14,44
CNMM120412-NRF	WPP05S	10	■	027	6613551*	14,44
CNMM120412-NRF	WPP10S	10	■	027	6164082*	14,44
CNMM120416-HU3	WPP10G	10	●	027	8138324	14,44
CNMM120416-HU3	WPP20G	10	●	027	8138323	14,44
CNMM120416-NR6	WAK30	10	●	027	5118174	14,01
CNMM160612-HU3	WPP05G	10	●	027	8411446	22,94
CNMM160612-HU3	WPP10G	10	●	027	8138352	22,94
CNMM160612-HU3	WPP20G	10	●	027	8138351	22,94
CNMM160612-HU3	WPP30G	10	●	027	8138353	22,94
CNMM160612-HU5	WMP20S	10	●	027	7583839	22,27
CNMM160612-HU5	WPP10G	10	●	027	8116184	22,94
CNMM160612-HU5	WPP20G	10	●	027	8116185	22,94
CNMM160612-HU5	WSM20S	10	■	027	7583788*	22,27
CNMM160612-HU5	WSM30S	10	●	027	7583789	22,27
CNMM160612-HU7	WPP10G	10	●	027	8138420	22,94
CNMM160612-HU7	WPP20G	10	●	027	8138421	22,94
CNMM160612-HU7	WPP30G	10	●	027	8138422	22,94
CNMM160616-HU3	WPP05G	10	●	027	8411448	22,94
CNMM160616-HU3	WPP10G	10	●	027	8138354	22,94
CNMM160616-HU3	WPP20G	10	●	027	8138356	22,94
CNMM160616-HU3	WPP30G	10	●	027	8138355	22,94
CNMM160616-HU5	WMP20S	10	●	027	7583842	22,27
CNMM160616-HU5	WPP10G	10	●	027	8116186	22,94
CNMM160616-HU5	WPP20G	10	●	027	8116187	22,94
CNMM160616-HU5	WSM20S	10	■	027	7583790*	22,27
CNMM160616-HU5	WSM30S	10	●	027	7583791	22,27
CNMM160616-HU7	WPP10G	10	●	027	8138424	22,94
CNMM160616-HU7	WPP20G	10	●	027	8138423	22,94
CNMM160616-NRF	WPP05S	10	■	027	6613553*	22,94
CNMM160616-NRF	WPP10S	10	■	027	6164124*	22,94
CNMM160616-NRF	WPP20S	10	■	027	6164125*	22,94
CNMM160616-NRF	WPP30S	10	■	027	6164126*	22,94
CNMM160624-HU3	WPP10G	10	●	027	8138358	22,94
CNMM160624-HU3	WPP20G	10	●	027	8138357	22,94
CNMM160624-HU7	WPP10G	10	●	027	8138425	22,94
CNMM160624-HU7	WPP20G	10	●	027	8138426	22,94
CNMM160624-NRF	WPP20S	10	■	027	6164141*	22,94
CNMM190612-HU3	WPP10G	10	●	027	8138360	32,10
CNMM190612-HU3	WPP20G	10	●	027	8138361	32,10
CNMM190612-HU3	WPP30G	10	●	027	8138359	32,10
CNMM190612-HU5	WMP20S	10	●	027	7583845	31,10

Bezeichnung / Designation	Sorte / Grade	VE / US		Disc. Gr.	Article No.	EURO Stück / piece
CNMM190612-HU5	WPP10G	10	●	027	8116188	32,10
CNMM190612-HU5	WPP20G	10	●	027	8116189	32,10
CNMM190612-HU5	WSM20S	10	■	027	7583792[1]	31,10
CNMM190612-HU5	WSM30S	10	●	027	7583793	31,10
CNMM190612-HU7	WPP10G	10	●	027	8138427	32,10
CNMM190612-HU7	WPP20G	10	●	027	8138429	32,10
CNMM190612-HU7	WPP30G	10	●	027	8138428	32,10
CNMM190616-HU3	WPP10G	10	●	027	8138364	32,10
CNMM190616-HU3	WPP20G	10	●	027	8138362	32,10
CNMM190616-HU3	WPP30G	10	●	027	8138363	32,10
CNMM190616-HU5	WMP20S	10	●	027	7583848	31,10
CNMM190616-HU5	WPP10G	10	●	027	8116190	32,10
CNMM190616-HU5	WPP20G	10	●	027	8116191	32,10
CNMM190616-HU5	WSM20S	10	■	027	7583794[1]	31,10
CNMM190616-HU5	WSM30S	10	●	027	7583795	31,10
CNMM190616-HU7	WPP10G	10	●	027	8138327	32,10
CNMM190616-HU7	WPP20G	10	●	027	8138325	32,10
CNMM190616-HU7	WPP30G	10	●	027	8138326	32,10
CNMM190616-NR6	WPP10	10	■	027	5092510[1]	32,10
CNMM190616-NR6	WPP10G	10	●	027	8368237[1]	32,10
CNMM190624-HU3	WPP20G	10	●	027	8138366	32,10
CNMM190624-HU3	WPP30G	10	●	027	8138365	32,10
CNMM190624-HU5	WPP10G	10	●	027	8116192	32,10
CNMM190624-HU5	WPP20G	10	●	027	8116193	32,10
CNMM190624-HU7	WPP10G	10	●	027	8138430	32,10
CNMM190624-HU7	WPP20G	10	●	027	8138431	32,10
CNMM190624-HU7	WPP30G	10	●	027	8138432	32,10
CNMM190624-NRR	WPP10S	10	●	027	6160997[2]	32,10
CNMM190624-NRR	WPP20S	10	■	027	6160999[1]	32,10
CNMM190624-NRR	WPP30S	10	■	027	6161000[1]	32,10
CNMM250924-HU3	WPP20G	5	●	027	8138367	71,50
CNMM250924-HU7	WPP20G	5	●	027	8138433	71,50
CNMM250924-HU7	WPP30G	5	●	027	8138434	71,50
CNMQ080508-A57T	WAK15	10	●	009	5015769	22,69
CNMQ080508-A57T	WKP35S	10	●	009	5918331	22,69
CNMQ120608-A57T	WKP35S	10	●	009	5918333	24,91
CNMQ120608T-A27T	WKP35S	10	●	009	5918334	24,91
CNMQ160812-A57T	WKP35S	10	●	009	5918335	30,40
CNMQ160812T-A27T	WKP35S	10	●	009	5918336	30,40
CNMU080508-D57T	WKP25S	10	●	009	7028019	24,99
CNMU080508-D57T	WKP35S	10	●	009	5918337	24,99
CNMU080508-D57T	WSM35G	10	●	009	8284985	26,20
CNMU080508-D57T	WSM35S	10	■	009	7058508[1]	26,20
CNMU080508-D57T	WSP45G	10	●	009	8112851	26,20
CNMU120608-D57T	WKP25S	10	●	009	7028020	27,50
CNMU120608-D57T	WKP35S	10	●	009	5918338	27,50
CNMU120608-D57T	WSP45G	10	●	009	8112852	28,90
CNMU160812-D57T	WKP25S	10	●	009	7028021	33,60
CNMU160812-D57T	WKP35S	10	●	009	5918339	33,60
CNMU160812-D57T	WSP45G	10	●	009	8112853	35,30
CPGT050202-PF5	WAK10	10	●	029	5022013	17,46
CPGT050202-X15	WAK15	10	●	019	5015715	17,46
CPGT050202-X15	WTP35	10	●	019	5004272	17,46
CPGT050202-X15	WXM15	10	●	019	5004492	17,46
CPGT050202-X5	WAK15	10	●	019	5015717	17,46
CPGT050202-X5	WTP35	10	●	019	5004274	17,46
CPGT050202-X5	WXM15	10	●	019	5004488	17,46
CPGT050202M-FP2	WEP10C	10	●	029	7780022	15,72
CPGT050204-MK4	WKK20S	10	●	029	6363972	17,46
CPGT050204-MM4	WSM20S	10	●	029	6844637	17,46
CPGT050204-MP4	WPP20G	10	●	029	8204250	17,98
CPGT050204-X15	WAK15	10	●	019	5015718	17,46
CPGT050204-X15	WK1	10	●	019	5004172	13,21
CPGT050204-X15	WTP35	10	●	019	5004275	17,46
CPGT050204-X15	WXM15	10	●	019	5004494	17,46
CPGT050204-X25	WK1	10	●	019	5004173	13,21
CPGT050204-X5	WAK15	10	●	019	5015720	17,46
CPGT050204-X5	WTP35	10	●	019	5004277	17,46
CPGT050204-X5	WXM15	10	●	019	5004490	17,46
CPGT050204M-FP2	WEP10C	10	●	029	7780023	15,72

Bezeichnung / Designation	Sorte / Grade	VE / US		Disc. Gr.	Article No.	EURO Stück / piece
CPGT060201-MM4	WSM01	10	●	029	7021239	17,99
CPGT060202-MM4	WSM01	10	●	029	7021250	17,99
CPGT060204-MK4	WKK20S	10	●	029	6364140	17,46
CPGT060204-MM4	WSM01	10	●	029	7021251	17,99
CPGT060204-MM4	WSM20S	10	●	029	6844638	17,46
CPGT060204-MP4	WPP10G	10	●	029	8204252	17,98
CPGT060204-MP4	WPP20G	10	●	029	8204251	17,98
CPGT060208-MK4	WKK20S	10	●	029	6363415	17,46
CPGT060208-MM4	WSM01	10	●	029	7021252	17,99
CPGT09T301-MM4	WSM01	10	●	029	7021253	21,00
CPGT09T304-MM4	WSM01	10	●	029	7021254	21,00
CPGT09T304-MM4	WSM20S	10	●	029	6844690	20,39
CPGT09T304-MP4	WPP10G	10	●	029	8204254	21,01
CPGT09T304-MP4	WPP20G	10	●	029	8204253	21,01
CPGT09T308-MK4	WKK20S	10	●	029	6363502	20,39
CPGT09T308-MM4	WSM01	10	●	029	7021255	21,00
CPGT09T308-MM4	WSM20S	10	●	029	6844691	20,39
CPGT09T308-MP4	WPP10G	10	●	029	8204256	21,01
CPGT09T308-MP4	WPP20G	10	●	029	8204255	21,01
CPGW050202	WCB50	1	●	013	5169032	57,10
CPGW050204	WCB50	1	●	013	5169033	57,10
CPGW050204FS-1	WDN10	2	●	025	7132604	62,30
CPGW060204FS-1	WDN10	2	●	025	7132605	62,30
CPGW09T304FS-1	WDN10	2	●	025	7132606	68,60
CPGW09T308FS-1	WDN10	2	●	025	7132607	68,60
CPGW120408FS-1	WDN10	2	●	025	7132608	71,70
CPMT04T104-MM4	WSM20S	10	●	029	7469031	8,95
CPMT04T104-MP4	WPP20G	10	●	029	8204257	9,23
CPMT050204-FM4	WMP20S	10	●	029	7021338	9,71
CPMT050204-FM4	WSM20S	10	●	029	7021337	9,71
CPMT050204-FP4	WPP10G	10	●	029	8204258	9,99
CPMT060204-FM4	WMP20S	10	●	029	7021350	9,71
CPMT060204-FM4	WSM20S	10	●	029	7021339	9,71
CPMT060204-FP4	WPP10G	10	●	029	8204259	9,99
CPMT060204-MM4	WSM20S	10	●	029	6837322	9,71
CPMT060204-MP4	WPP20G	10	●	029	8204260	9,99
CPMT060208-MK4	WKK20S	10	●	029	6486598	9,71
CPMT060208-MM4	WSM20S	10	●	029	6837323	9,71
CPMT060208-MP4	WPP20G	10	●	029	8204261	9,99
CPMT09T304-FM4	WMP20S	10	●	029	7021352	11,31
CPMT09T304-FM4	WSM20S	10	●	029	7021351	11,31
CPMT09T304-FP4	WPP10G	10	●	029	8204262	11,65
CPMT09T304-MM4	WSM20S	10	●	029	6837324	11,31
CPMT09T304-MP4	WPP20G	10	●	029	8204263	11,65
CPMT09T308-FM4	WMP20S	10	●	029	7021354	11,31
CPMT09T308-FM4	WSM20S	10	●	029	7021353	11,31
CPMT09T308-FP4	WPP10G	10	●	029	8204264	11,65
CPMT09T308-MK4	WKK20S	10	●	029	6486652	11,31
CPMT09T308-MM4	WSM20S	10	●	029	6837325	11,31
CPMT09T308-MP4	WPP20G	10	●	029	8204265	11,65
CPMW050204-RK6	WKK20S	10	●	029	7021355	9,71
CPMW060204-RK6	WKK20S	10	●	029	7021356	9,71
CPMW09T304-RK6	WKK20S	10	●	029	7021357	11,31
CPMW09T308-RK6	WKK20S	10	●	029	7021358	11,31
CRDCN3225P09-A		1	●	060	6296390	212,00
CRDCN3225P12-A		1	●	060	6296391	212,00
CRDNN2525M12-ID		1	●	060	6295999	166,00
CRDNN3225P12-ID		1	●	060	6296161	166,00
CRSNL2525M12-ID		1	●	060	6296163	166,00
CRSNL2525X12-P		1	●	060	7512919	255,00
CRSNL3225P12-ID		1	●	060	6296165	166,00
CRSNL3232P15-ID		1	●	060	6296168	205,00
CRSNR2525M12-ID		1	●	060	6296164	166,00
CRSNR2525X12-P		1	●	060	7513030	255,00
CRSNR3225P12-ID		1	●	060	6296167	166,00
CRSNR3232P15-ID		1	●	060	6296169	205,00
CW1002-RXGN12		1	●	095	7937689	46,60
D3120-02-16.00F25-P21		1	●	050	7098378	391,00
D3120-02-17.00F25-P21		1	●	050	7098379	411,00
D3120-02-18.00F25-P21		1	●	050	7098410	411,00

Bezeichnung / Designation	Sorte / Grade	VE / US		Disc. Gr.	Article No.	EURO Stück / piece
D3120-02-19.00F25-P21		1	●	050	7098411	**411,00**
D3120-02-20.00F25-P21		1	●	050	7098412	**411,00**
D3120-02-21.00F25-P22		1	●	050	7098413	**432,00**
D3120-02-22.00F25-P22		1	●	050	7098414	**432,00**
D3120-02-23.00F25-P22		1	●	050	7098415	**432,00**
D3120-02-24.00F25-P22		1	●	050	7098416	**432,00**
D3120-02-25.00F25-P22		1	●	050	7098417	**432,00**
D3120-02-26.00F32-P23		1	●	050	7098418	**453,00**
D3120-02-27.00F32-P23		1	●	050	7098419	**453,00**
D3120-02-28.00F32-P23		1	●	050	7098420	**453,00**
D3120-02-29.00F32-P23		1	●	050	7098421	**453,00**
D3120-02-30.00F32-P23		1	●	050	7098422	**453,00**
D3120-02-31.00F32-P24		1	●	050	7098423	**473,00**
D3120-02-32.00F32-P24		1	●	050	7098424	**473,00**
D3120-02-33.00F32-P24		1	●	050	7098425	**473,00**
D3120-02-34.00F32-P24		1	●	050	7098426	**473,00**
D3120-02-35.00F32-P24		1	●	050	7098427	**473,00**
D3120-02-36.00F32-P24		1	●	050	7098428	**514,00**
D3120-02-37.00F40-P25		1	●	050	7098429	**514,00**
D3120-02-38.00F40-P25		1	●	050	7098430	**514,00**
D3120-02-39.00F40-P25		1	●	050	7098431	**514,00**
D3120-02-40.00F40-P25		1	●	050	7098432	**514,00**
D3120-02-41.00F40-P25		1	●	050	7098433	**514,00**
D3120-02-42.00F40-P25		1	●	050	7098434	**514,00**
D3120-03-16.00F25-P21		1	●	050	7098435	**411,00**
D3120-03-17.00F25-P21		1	●	050	7098436	**433,00**
D3120-03-17.50F25-P21		1	●	050	8087968	**433,00**
D3120-03-18.00F25-P21		1	●	050	7098437	**433,00**
D3120-03-19.00F25-P21		1	●	050	7098438	**433,00**
D3120-03-19.50F25-P21		1	●	050	8087969	**433,00**
D3120-03-20.00F25-P21		1	●	050	7098439	**433,00**
D3120-03-21.00F25-P22		1	●	050	7098440	**455,00**
D3120-03-22.00F25-P22		1	●	050	7098441	**455,00**
D3120-03-23.00F25-P22		1	●	050	7098442	**455,00**
D3120-03-24.00F25-P22		1	●	050	7098443	**455,00**
D3120-03-25.00F25-P22		1	●	050	7098444	**455,00**
D3120-03-26.00F32-P23		1	●	050	7098445	**476,00**
D3120-03-26.50F32-P23		1	●	050	8087970	**476,00**
D3120-03-27.00F32-P23		1	●	050	7098446	**476,00**
D3120-03-28.00F32-P23		1	●	050	7098447	**476,00**
D3120-03-29.00F32-P23		1	●	050	7098448	**476,00**
D3120-03-29.50F32-P23		1	●	050	8087971	**476,00**
D3120-03-30.00F32-P23		1	●	050	7098449	**476,00**
D3120-03-31.00F32-P24		1	●	050	7098450	**498,00**
D3120-03-32.00F32-P24		1	●	050	7098451	**498,00**
D3120-03-33.00F32-P24		1	●	050	7098452	**498,00**
D3120-03-34.00F32-P24		1	●	050	7098453	**498,00**
D3120-03-35.00F32-P24		1	●	050	7098454	**498,00**
D3120-03-36.00F32-P24		1	●	050	7098455	**541,00**
D3120-03-37.00F40-P25		1	●	050	7098456	**541,00**
D3120-03-37.50F40-P25		1	●	050	8087972	**541,00**
D3120-03-38.00F40-P25		1	●	050	7098457	**541,00**
D3120-03-39.00F40-P25		1	●	050	7098458	**541,00**
D3120-03-40.00F40-P25		1	●	050	7098459	**541,00**
D3120-03-40.50F40-P25		1	●	050	8087973	**541,00**
D3120-03-41.00F40-P25		1	●	050	7098460	**541,00**
D3120-03-42.00F40-P25		1	●	050	7098461	**541,00**
D3120-03-43.00F40-P26		1	●	050	8087932	**606,00**
D3120-03-44.00F40-P26		1	●	050	8087933	**606,00**
D3120-03-45.00F40-P26		1	●	050	8087934	**606,00**
D3120-03-46.00F40-P26		1	●	050	8087935	**606,00**
D3120-03-47.00F40-P26		1	●	050	8087936	**606,00**
D3120-03-48.00F40-P26		1	●	050	8087937	**606,00**
D3120-03-49.00F40-P26		1	●	050	8087938	**606,00**
D3120-03-50.00F40-P26		1	●	050	8087939	**606,00**
D3120-03-50.50F40-P27		1	●	050	8087974	**693,00**
D3120-03-51.00F40-P27		1	●	050	8087960	**693,00**
D3120-03-52.00F40-P27		1	●	050	8087961	**693,00**
D3120-03-53.00F40-P27		1	●	050	8087962	**693,00**
D3120-03-54.00F40-P27		1	●	050	8087963	**693,00**

Bezeichnung / Designation	Sorte / Grade	VE / US		Disc. Gr.	Article No.	EURO Stück / piece
D3120-03-54.50F40-P27		1	●	050	8087975	**693,00**
D3120-03-55.00F40-P27		1	●	050	8087964	**693,00**
D3120-03-56.00F40-P27		1	●	050	8087965	**693,00**
D3120-03-57.00F40-P27		1	●	050	8087966	**693,00**
D3120-03-58.00F40-P27		1	●	050	8087967	**693,00**
D3120-04-16.00F25-P21		1	●	050	7098462	**453,00**
D3120-04-17.00F25-P21		1	●	050	7098463	**476,00**
D3120-04-18.00F25-P21		1	●	050	7098464	**476,00**
D3120-04-19.00F25-P21		1	●	050	7098465	**476,00**
D3120-04-20.00F25-P21		1	●	050	7098466	**476,00**
D3120-04-21.00F25-P22		1	●	050	7098467	**500,00**
D3120-04-22.00F25-P22		1	●	050	7098468	**500,00**
D3120-04-23.00F25-P22		1	●	050	7098469	**500,00**
D3120-04-24.00F25-P22		1	●	050	7098470	**500,00**
D3120-04-25.00F25-P22		1	●	050	7098471	**500,00**
D3120-04-26.00F32-P23		1	●	050	7098472	**524,00**
D3120-04-27.00F32-P23		1	●	050	7098473	**524,00**
D3120-04-28.00F32-P23		1	●	050	7098474	**524,00**
D3120-04-29.00F32-P23		1	●	050	7098475	**524,00**
D3120-04-30.00F32-P23		1	●	050	7098476	**524,00**
D3120-04-31.00F32-P24		1	●	050	7098477	**548,00**
D3120-04-32.00F32-P24		1	●	050	7098478	**548,00**
D3120-04-33.00F32-P24		1	●	050	7098479	**548,00**
D3120-04-34.00F32-P24		1	●	050	7098480	**548,00**
D3120-04-35.00F32-P24		1	●	050	7098481	**548,00**
D3120-04-36.00F32-P24		1	●	050	7098482	**596,00**
D3120-04-37.00F40-P25		1	●	050	7098483	**596,00**
D3120-04-38.00F40-P25		1	●	050	7098484	**596,00**
D3120-04-39.00F40-P25		1	●	050	7098485	**596,00**
D3120-04-40.00F40-P25		1	●	050	7098486	**596,00**
D3120-04-41.00F40-P25		1	●	050	7098487	**596,00**
D3120-04-42.00F40-P25		1	●	050	7098488	**596,00**
D3120.03-19.05F26-P21		1	●	050	7812242	**433,00**
D3120.03-22.23F26-P22		1	●	050	7812243	**455,00**
D3120.03-25.40F26-P22		1	●	050	7812244	**455,00**
D3120.03-28.58F31-P23		1	●	050	7812245	**476,00**
D3120.03-31.75F31-P24		1	●	050	7812246	**498,00**
D3120.03-34.93F31-P24		1	●	050	7812247	**498,00**
D3120.03-38.10F38-P25		1	●	050	7812248	**541,00**
D3120.04-19.05F26-P21		1	●	050	7812249	**476,00**
D3120.04-25.40F26-P22		1	●	050	7812250	**500,00**
D3120.04-31.75F31-P24		1	●	050	7812251	**548,00**
D3120.04-38.10F38-P25		1	●	050	7812252	**596,00**
D4120-02-13.50F20-P41		1	●	050	6929214	**391,00**
D4120-02-14.00F20-P41		1	●	050	6929216	**391,00**
D4120-02-14.50F20-P41		1	●	050	6929215	**391,00**
D4120-02-15.00F20-P41		1	●	050	6929218	**391,00**
D4120-02-15.50F20-P41		1	●	050	6929217	**391,00**
D4120-02-16.00F25-P41		1	●	050	6929230	**391,00**
D4120-02-16.50F25-P42		1	●	050	6929219	**411,00**
D4120-02-17.00F25-P42		1	●	050	6929232	**411,00**
D4120-02-17.50F25-P42		1	●	050	6929231	**411,00**
D4120-02-18.00F25-P42		1	●	050	6929234	**411,00**
D4120-02-18.50F25-P42		1	●	050	6929233	**411,00**
D4120-02-19.00F25-P42		1	●	050	6929236	**411,00**
D4120-02-19.50F25-P42		1	●	050	6929235	**411,00**
D4120-02-20.00F25-P42		1	●	050	6929238	**411,00**
D4120-02-20.50F25-P43		1	●	050	6929237	**432,00**
D4120-02-21.00F25-P43		1	●	050	6929240	**432,00**
D4120-02-21.50F25-P43		1	●	050	6929239	**432,00**
D4120-02-22.00F25-P43		1	●	050	6929242	**432,00**
D4120-02-22.50F25-P43		1	●	050	6929241	**432,00**
D4120-02-23.00F25-P43		1	●	050	6929244	**432,00**
D4120-02-23.50F25-P43		1	●	050	6929243	**432,00**
D4120-02-24.00F25-P43		1	●	050	6929246	**432,00**
D4120-02-24.50F25-P44		1	●	050	6929245	**432,00**
D4120-02-25.00F25-P44		1	●	050	6929247	**432,00**
D4120-02-25.50F32-P44		1	●	050	6929248	**453,00**
D4120-02-26.00F32-P44		1	●	050	6929250	**453,00**
D4120-02-26.50F32-P44		1	●	050	6929249	**453,00**

Bezeichnung / Designation	Sorte / Grade	VE / US		Disc. Gr.	Article No.	EURO Stück / piece
D4120-02-27.00F32-P44		1	●	050	6929252	453,00
D4120-02-27.50F32-P44		1	●	050	6929251	453,00
D4120-02-28.00F32-P44		1	●	050	6929254	453,00
D4120-02-28.50F32-P44		1	●	050	6929253	453,00
D4120-02-29.00F32-P44		1	●	050	6929256	453,00
D4120-02-29.50F32-P45		1	●	050	6929255	453,00
D4120-02-30.00F32-P45		1	●	050	6929257	453,00
D4120-02-30.50F32-P45		1	●	050	8272878	453,00
D4120-02-31.00F32-P45		1	●	050	6929258	473,00
D4120-02-31.50F32-P45		1	●	050	8272879	473,00
D4120-02-32.00F32-P45		1	●	050	6929259	473,00
D4120-02-32.50F32-P45		1	●	050	8272880	473,00
D4120-02-33.00F32-P45		1	●	050	6929260	473,00
D4120-02-33.50F32-P45		1	●	050	8272881	473,00
D4120-02-34.00F32-P45		1	●	050	6929261	473,00
D4120-02-34.50F32-P45		1	●	050	8272882	473,00
D4120-02-35.00F32-P45		1	●	050	6929262	473,00
D4120-02-35.50F32-P46		1	●	050	8272883	473,00
D4120-02-36.00F32-P46		1	●	050	6929263	514,00
D4120-02-36.50F32-P46		1	●	050	8272884	514,00
D4120-02-37.00F40-P46		1	●	050	6929264	514,00
D4120-02-37.50F40-P46		1	●	050	8272885	514,00
D4120-02-38.00F40-P46		1	●	050	6929265	514,00
D4120-02-38.50F40-P46		1	●	050	8272886	514,00
D4120-02-39.00F40-P46		1	●	050	6929266	514,00
D4120-02-39.50F40-P46		1	●	050	8272887	514,00
D4120-02-40.00F40-P46		1	●	050	6929267	514,00
D4120-02-40.50F40-P46		1	●	050	8272888	514,00
D4120-02-41.00F40-P46		1	●	050	6929268	514,00
D4120-02-41.50F40-P46		1	●	050	8272889	514,00
D4120-02-42.00F40-P46		1	●	050	6929269	514,00
D4120-02-43.00F40-P47		1	●	050	6929270	576,00
D4120-02-44.00F40-P47		1	●	050	6929271	576,00
D4120-02-45.00F40-P47		1	●	050	6929272	576,00
D4120-02-46.00F40-P47		1	●	050	6929273	576,00
D4120-02-47.00F40-P47		1	●	050	6929274	576,00
D4120-02-48.00F40-P47		1	●	050	6929275	576,00
D4120-02-49.00F40-P47		1	●	050	6929276	576,00
D4120-02-50.00F40-P47		1	●	050	6929277	576,00
D4120-02-51.00F40-P48		1	●	050	6929278	658,00
D4120-02-52.00F40-P48		1	●	050	6929279	658,00
D4120-02-53.00F40-P48		1	●	050	6929280	658,00
D4120-02-54.00F40-P48		1	●	050	6929281	658,00
D4120-02-55.00F40-P48		1	●	050	6929282	658,00
D4120-02-56.00F40-P48		1	●	050	6929283	658,00
D4120-02-57.00F40-P48		1	●	050	6929284	658,00
D4120-02-58.00F40-P48		1	●	050	6929285	658,00
D4120-02-59.00F40-P48		1	●	050	6929286	658,00
D4120-03-13.50F20-P41		1	●	050	6929287	411,00
D4120-03-14.00F20-P41		1	●	050	6929289	411,00
D4120-03-14.50F20-P41		1	●	050	6929288	411,00
D4120-03-15.00F20-P41		1	●	050	6929291	411,00
D4120-03-15.50F20-P41		1	●	050	6929290	411,00
D4120-03-16.00F25-P41		1	●	050	6929293	411,00
D4120-03-16.50F25-P42		1	●	050	6929292	433,00
D4120-03-17.00F25-P42		1	●	050	6929295	433,00
D4120-03-17.50F25-P42		1	●	050	6929294	433,00
D4120-03-18.00F25-P42		1	●	050	6929297	433,00
D4120-03-18.50F25-P42		1	●	050	6929296	433,00
D4120-03-19.00F25-P42		1	●	050	6929299	433,00
D4120-03-19.50F25-P42		1	●	050	6929298	433,00
D4120-03-20.00F25-P42		1	●	050	6929301	433,00
D4120-03-20.50F25-P43		1	●	050	6929300	455,00
D4120-03-21.00F25-P43		1	●	050	6929303	455,00
D4120-03-21.50F25-P43		1	●	050	6929302	455,00
D4120-03-22.00F25-P43		1	●	050	6929305	455,00
D4120-03-22.50F25-P43		1	●	050	6929304	455,00
D4120-03-23.00F25-P43		1	●	050	6929307	455,00
D4120-03-23.50F25-P43		1	●	050	6929306	455,00
D4120-03-24.00F25-P43		1	●	050	6929309	455,00

Bezeichnung / Designation	Sorte / Grade	VE / US		Disc. Gr.	Article No.	EURO Stück / piece
D4120-03-24.50F25-P44		1	●	050	6929308	455,00
D4120-03-25.00F25-P44		1	●	050	6929310	455,00
D4120-03-25.50F32-P44		1	●	050	6929311	476,00
D4120-03-26.00F32-P44		1	●	050	6929313	476,00
D4120-03-26.50F32-P44		1	●	050	6929312	476,00
D4120-03-27.00F32-P44		1	●	050	6929315	476,00
D4120-03-27.50F32-P44		1	●	050	6929314	476,00
D4120-03-28.00F32-P44		1	●	050	6929317	476,00
D4120-03-28.50F32-P44		1	●	050	6929316	476,00
D4120-03-29.00F32-P44		1	●	050	6929319	476,00
D4120-03-29.50F32-P45		1	●	050	6929318	476,00
D4120-03-30.00F32-P45		1	●	050	6929320	476,00
D4120-03-30.50F32-P45		1	●	050	8272866	476,00
D4120-03-31.00F32-P45		1	●	050	6929321	498,00
D4120-03-31.50F32-P45		1	●	050	8272867	498,00
D4120-03-32.00F32-P45		1	●	050	6929322	498,00
D4120-03-32.50F32-P45		1	●	050	8272868	498,00
D4120-03-33.00F32-P45		1	●	050	6929323	498,00
D4120-03-33.50F32-P45		1	●	050	8272869	498,00
D4120-03-34.00F32-P45		1	●	050	6929324	498,00
D4120-03-34.50F32-P45		1	●	050	8272870	498,00
D4120-03-35.00F32-P45		1	●	050	6929325	498,00
D4120-03-35.50F32-P46		1	●	050	8272871	498,00
D4120-03-36.00F32-P46		1	●	050	6929326	541,00
D4120-03-36.50F32-P46		1	●	050	8272872	541,00
D4120-03-37.00F40-P46		1	●	050	6929327	541,00
D4120-03-37.50F40-P46		1	●	050	8272873	541,00
D4120-03-38.00F40-P46		1	●	050	6929328	541,00
D4120-03-38.50F40-P46		1	●	050	8272874	541,00
D4120-03-39.00F40-P46		1	●	050	6929329	541,00
D4120-03-39.50F40-P46		1	●	050	8272875	541,00
D4120-03-40.00F40-P46		1	●	050	6929330	541,00
D4120-03-40.50F40-P46		1	●	050	8272876	541,00
D4120-03-41.00F40-P46		1	●	050	6929331	541,00
D4120-03-41.50F40-P46		1	●	050	8272877	541,00
D4120-03-42.00F40-P46		1	●	050	6929332	541,00
D4120-03-43.00F40-P47		1	●	050	6929333	606,00
D4120-03-44.00F40-P47		1	●	050	6929334	606,00
D4120-03-45.00F40-P47		1	●	050	6929335	606,00
D4120-03-46.00F40-P47		1	●	050	6929336	606,00
D4120-03-47.00F40-P47		1	●	050	6929337	606,00
D4120-03-48.00F40-P47		1	●	050	6929338	606,00
D4120-03-49.00F40-P47		1	●	050	6929339	606,00
D4120-03-50.00F40-P47		1	●	050	6929340	606,00
D4120-03-51.00F40-P48		1	●	050	6929341	693,00
D4120-03-52.00F40-P48		1	●	050	6929342	693,00
D4120-03-53.00F40-P48		1	●	050	6929343	693,00
D4120-03-54.00F40-P48		1	●	050	6929344	693,00
D4120-03-55.00F40-P48		1	●	050	6929345	693,00
D4120-03-56.00F40-P48		1	●	050	6929346	693,00
D4120-03-57.00F40-P48		1	●	050	6929347	693,00
D4120-03-58.00F40-P48		1	●	050	6929348	693,00
D4120-03-59.00F40-P48		1	●	050	6929349	693,00
D4120-04-16.50F25-P42		1	●	050	8272890	476,00
D4120-04-17.00F25-P42		1	●	050	6929354	476,00
D4120-04-17.50F25-P42		1	●	050	8272891	476,00
D4120-04-18.00F25-P42		1	●	050	6929355	476,00
D4120-04-18.50F25-P42		1	●	050	8272892	476,00
D4120-04-19.00F25-P42		1	●	050	6929356	476,00
D4120-04-19.50F25-P42		1	●	050	8272893	476,00
D4120-04-20.00F25-P42		1	●	050	6929357	476,00
D4120-04-20.50F25-P43		1	●	050	8272894	476,00
D4120-04-21.00F25-P43		1	●	050	6929358	500,00
D4120-04-21.50F25-P43		1	●	050	8272895	500,00
D4120-04-22.00F25-P43		1	●	050	6929359	500,00
D4120-04-22.50F25-P43		1	●	050	8272896	500,00
D4120-04-23.00F25-P43		1	●	050	6929360	500,00
D4120-04-23.50F25-P43		1	●	050	8272897	500,00
D4120-04-24.00F25-P43		1	●	050	6929361	500,00
D4120-04-24.50F25-P44		1	●	050	8272898	500,00

Bezeichnung / Designation	Sorte / Grade	VE / US		Disc. Gr.	Article No.	EURO Stück / piece
D4120-04-25.00F25-P44		1	●	050	6929362	**500,00**
D4120-04-25.50F32-P44		1	●	050	8272899	**500,00**
D4120-04-26.00F32-P44		1	●	050	6929363	**524,00**
D4120-04-26.50F32-P44		1	●	050	8272900	**524,00**
D4120-04-27.00F32-P44		1	●	050	6929364	**524,00**
D4120-04-27.50F32-P44		1	●	050	8272901	**524,00**
D4120-04-28.00F32-P44		1	●	050	6929365	**524,00**
D4120-04-28.50F32-P44		1	●	050	8272902	**524,00**
D4120-04-29.00F32-P44		1	●	050	6929366	**524,00**
D4120-04-29.50F32-P45		1	●	050	8272903	**524,00**
D4120-04-30.00F32-P45		1	●	050	6929367	**524,00**
D4120-04-30.50F32-P45		1	●	050	8272904	**524,00**
D4120-04-31.00F32-P45		1	●	050	6929368	**548,00**
D4120-04-31.50F32-P45		1	●	050	8272905	**548,00**
D4120-04-32.00F32-P45		1	●	050	6929369	**548,00**
D4120-04-32.50F32-P45		1	●	050	8272906	**548,00**
D4120-04-33.00F32-P45		1	●	050	6929370	**548,00**
D4120-04-33.50F32-P45		1	●	050	8272907	**548,00**
D4120-04-34.00F32-P45		1	●	050	6929371	**548,00**
D4120-04-34.50F32-P45		1	●	050	8272908	**548,00**
D4120-04-35.00F32-P45		1	●	050	6929372	**548,00**
D4120-04-35.50F32-P46		1	●	050	8272909	**548,00**
D4120-04-36.00F32-P46		1	●	050	6929373	**596,00**
D4120-04-36.50F32-P46		1	●	050	8272910	**596,00**
D4120-04-37.00F40-P46		1	●	050	6929374	**596,00**
D4120-04-37.50F40-P46		1	●	050	8272911	**596,00**
D4120-04-38.00F40-P46		1	●	050	6929375	**596,00**
D4120-04-38.50F40-P46		1	●	050	8272912	**596,00**
D4120-04-39.00F40-P46		1	●	050	6929376	**596,00**
D4120-04-39.50F40-P46		1	●	050	8272913	**596,00**
D4120-04-40.00F40-P46		1	●	050	6929377	**596,00**
D4120-04-40.50F40-P46		1	●	050	8272914	**596,00**
D4120-04-41.00F40-P46		1	●	050	6929378	**596,00**
D4120-04-41.50F40-P46		1	●	050	8272915	**596,00**
D4120-04-42.00F40-P46		1	●	050	6929379	**596,00**
D4120-04-43.00F40-P47		1	●	050	6929380	**667,00**
D4120-04-44.00F40-P47		1	●	050	6929381	**667,00**
D4120-04-45.00F40-P47		1	●	050	6929382	**667,00**
D4120-04-46.00F40-P47		1	●	050	6929383	**667,00**
D4120-04-47.00F40-P47		1	●	050	6929384	**667,00**
D4120-04-48.00F40-P47		1	●	050	6929385	**667,00**
D4120-04-49.00F40-P47		1	●	050	6929386	**667,00**
D4120-04-50.00F40-P47		1	●	050	6929387	**667,00**
D4120-04-51.00F40-P48		1	●	050	6929388	**762,00**
D4120-04-52.00F40-P48		1	●	050	6929389	**762,00**
D4120-04-53.00F40-P48		1	●	050	6929390	**762,00**
D4120-04-54.00F40-P48		1	●	050	6929391	**762,00**
D4120-04-55.00F40-P48		1	●	050	6929392	**762,00**
D4120-04-56.00F40-P48		1	●	050	6929393	**762,00**
D4120-04-57.00F40-P48		1	●	050	6929394	**762,00**
D4120-04-58.00F40-P48		1	●	050	6929395	**762,00**
D4120-04-59.00F40-P48		1	●	050	6929396	**762,00**
D4120-05-16.50F25-P42		1	●	050	8272840	**541,00**
D4120-05-17.00F25-P42		1	●	050	6929402	**541,00**
D4120-05-17.50F25-P42		1	●	050	8272841	**541,00**
D4120-05-18.00F25-P42		1	●	050	6929403	**541,00**
D4120-05-18.50F25-P42		1	●	050	8272842	**541,00**
D4120-05-19.00F25-P42		1	●	050	6929404	**541,00**
D4120-05-19.50F25-P42		1	●	050	8272843	**541,00**
D4120-05-20.00F25-P42		1	●	050	6929405	**541,00**
D4120-05-20.50F25-P43		1	●	050	8272844	**541,00**
D4120-05-21.00F25-P43		1	●	050	6929406	**568,00**
D4120-05-21.50F25-P43		1	●	050	8272845	**568,00**
D4120-05-22.00F25-P43		1	●	050	6929407	**568,00**
D4120-05-22.50F25-P43		1	●	050	8272846	**568,00**
D4120-05-23.00F25-P43		1	●	050	6929408	**568,00**
D4120-05-23.50F25-P43		1	●	050	8272847	**568,00**
D4120-05-24.00F25-P43		1	●	050	6929409	**568,00**
D4120-05-24.50F25-P44		1	●	050	8272848	**568,00**
D4120-05-25.00F25-P44		1	●	050	6929410	**568,00**

Bezeichnung / Designation	Sorte / Grade	VE / US		Disc. Gr.	Article No.	EURO Stück / piece
D4120-05-25.50F32-P44		1	●	050	8272849	**568,00**
D4120-05-26.00F32-P44		1	●	050	6929411	**596,00**
D4120-05-26.50F32-P44		1	●	050	8272850	**596,00**
D4120-05-27.00F32-P44		1	●	050	6929412	**596,00**
D4120-05-27.50F32-P44		1	●	050	8272851	**596,00**
D4120-05-28.00F32-P44		1	●	050	6929413	**596,00**
D4120-05-28.50F32-P44		1	●	050	8272852	**596,00**
D4120-05-29.00F32-P44		1	●	050	6929414	**596,00**
D4120-05-29.50F32-P45		1	●	050	8272853	**596,00**
D4120-05-30.00F32-P45		1	●	050	6929415	**596,00**
D4120-05-30.50F32-P45		1	●	050	8272854	**596,00**
D4120-05-31.00F32-P45		1	●	050	6929416	**623,00**
D4120-05-31.50F32-P45		1	●	050	8272855	**623,00**
D4120-05-32.00F32-P45		1	●	050	6929417	**623,00**
D4120-05-32.50F32-P45		1	●	050	8272856	**623,00**
D4120-05-33.00F32-P45		1	●	050	6929418	**623,00**
D4120-05-33.50F32-P45		1	●	050	8272857	**623,00**
D4120-05-34.00F32-P45		1	●	050	6929419	**623,00**
D4120-05-34.50F32-P45		1	●	050	8272858	**623,00**
D4120-05-35.00F32-P45		1	●	050	6929420	**623,00**
D4120-05-35.50F32-P46		1	●	050	8272859	**623,00**
D4120-05-36.00F32-P46		1	●	050	6929421	**677,00**
D4120-05-36.50F32-P46		1	●	050	8272860	**677,00**
D4120-05-37.00F40-P46		1	●	050	6929422	**677,00**
D4120-05-37.50F40-P46		1	●	050	8272861	**677,00**
D4120-05-38.00F40-P46		1	●	050	6929423	**677,00**
D4120-05-38.50F40-P46		1	●	050	8272862	**677,00**
D4120-05-39.00F40-P46		1	●	050	6929424	**677,00**
D4120-05-39.50F40-P46		1	●	050	8272863	**677,00**
D4120-05-40.00F40-P46		1	●	050	6929425	**677,00**
D4120-05-40.50F40-P46		1	●	050	8272864	**677,00**
D4120-05-41.00F40-P46		1	●	050	6929426	**677,00**
D4120-05-41.50F40-P46		1	●	050	8272865	**677,00**
D4120-05-42.00F40-P46		1	●	050	6929427	**677,00**
D4120-05-43.00F40-P47		1	●	050	6929428	**758,00**
D4120-05-44.00F40-P47		1	●	050	6929429	**758,00**
D4120-05-45.00F40-P47		1	●	050	6929430	**758,00**
D4120-05-46.00F40-P47		1	●	050	6929431	**758,00**
D4120-05-47.00F40-P47		1	●	050	6929432	**758,00**
D4120-05-48.00F40-P47		1	●	050	6929433	**758,00**
D4120-05-49.00F40-P47		1	●	050	6929434	**758,00**
D4120-05-50.00F40-P47		1	●	050	6929435	**758,00**
D4120-05-51.00F40-P48		1	●	050	6929436	**866,00**
D4120-05-52.00F40-P48		1	●	050	6929437	**866,00**
D4120-05-53.00F40-P48		1	●	050	6929438	**866,00**
D4120-05-54.00F40-P48		1	●	050	6929439	**866,00**
D4120-05-55.00F40-P48		1	●	050	6929440	**866,00**
D4120-05-56.00F40-P48		1	●	050	6929441	**866,00**
D4120-05-57.00F40-P48		1	●	050	6929442	**866,00**
D4120-05-58.00F40-P48		1	●	050	6929443	**866,00**
D4120-05-59.00F40-P48		1	●	050	6929444	**866,00**
D4120.02-13.49F19-P41		1	●	050	6929527	**391,00**
D4120.02-13.89F19-P41		1	●	050	6929528	**391,00**
D4120.02-14.27F19-P41		1	●	050	6929529	**391,00**
D4120.02-14.68F19-P41		1	●	050	6929540	**391,00**
D4120.02-15.09F19-P41		1	●	050	6929541	**391,00**
D4120.02-15.47F19-P41		1	●	050	6929542	**391,00**
D4120.02-15.88F19-P41		1	●	050	6929543	**391,00**
D4120.02-16.66F26-P42		1	●	050	6929544	**411,00**
D4120.02-17.04F26-P42		1	●	050	6929545	**411,00**
D4120.02-17.45F26-P42		1	●	050	6929546	**411,00**
D4120.02-17.86F26-P42		1	●	050	6929547	**411,00**
D4120.02-18.24F26-P42		1	●	050	6929548	**411,00**
D4120.02-19.05F26-P42		1	●	050	6929549	**411,00**
D4120.02-19.43F26-P42		1	●	050	6929550	**411,00**
D4120.02-19.84F26-P42		1	●	050	6929551	**411,00**
D4120.02-20.62F26-P43		1	●	050	6929552	**432,00**
D4120.02-21.41F26-P43		1	●	050	6929553	**432,00**
D4120.02-22.23F31-P43		1	●	050	6929554	**432,00**
D4120.02-23.01F31-P43		1	●	050	6929555	**432,00**

Bezeichnung / Designation	Sorte / Grade	VE / US		Disc. Gr.	Article No.	EURO Stück / piece
D4120.02-23.39F31-P43		1	●	050	6929556	432,00
D4120.02-23.80F31-P43		1	●	050	6929557	432,00
D4120.02-24.59F31-P44		1	●	050	6929558	432,00
D4120.02-24.99F31-P44		1	●	050	6929559	432,00
D4120.02-25.40F31-P44		1	●	050	6929560	453,00
D4120.02-26.57F31-P44		1	●	050	6929561	453,00
D4120.02-26.97F31-P44		1	●	050	6929562	453,00
D4120.02-28.17F31-P44		1	●	050	6929563	453,00
D4120.02-28.58F31-P44		1	●	050	6929564	453,00
D4120.02-29.74F31-P45		1	●	050	6929565	453,00
D4120.02-30.15F31-P45		1	●	050	6929566	453,00
D4120.02-31.75F31-P45		1	●	050	6929567	473,00
D4120.02-33.32F31-P45		1	●	050	6929568	473,00
D4120.02-34.11F31-P45		1	●	050	6929569	473,00
D4120.02-34.93F31-P45		1	●	050	6929570	473,00
D4120.02-36.09F31-P46		1	●	050	6929571	514,00
D4120.02-36.50F38-P46		1	●	050	6929572	514,00
D4120.02-38.10F38-P46		1	●	050	6929573	514,00
D4120.02-39.67F38-P46		1	●	050	6929574	514,00
D4120.02-41.28F38-P46		1	●	050	6929575	514,00
D4120.02-42.85F38-P47		1	●	050	6929576	576,00
D4120.02-44.45F38-P47		1	●	050	6929577	576,00
D4120.02-46.02F38-P47		1	●	050	6929578	576,00
D4120.02-47.63F38-P47		1	●	050	6929579	576,00
D4120.02-49.20F38-P47		1	●	050	6929580	576,00
D4120.02-50.80F51-P48		1	●	050	6929581	658,00
D4120.02-52.37F51-P48		1	●	050	6929582	658,00
D4120.02-53.98F51-P48		1	●	050	6929583	658,00
D4120.02-55.55F51-P48		1	●	050	6929584	658,00
D4120.02-57.15F51-P48		1	●	050	6929585	658,00
D4120.03-13.49F19-P41		1	●	050	6929586	411,00
D4120.03-13.89F19-P41		1	●	050	6929587	411,00
D4120.03-14.27F19-P41		1	●	050	6929588	411,00
D4120.03-14.68F19-P41		1	●	050	6929589	411,00
D4120.03-15.09F19-P41		1	●	050	6929590	411,00
D4120.03-15.47F19-P41		1	●	050	6929591	411,00
D4120.03-15.88F19-P41		1	●	050	6929592	411,00
D4120.03-16.66F26-P42		1	●	050	6929593	433,00
D4120.03-17.04F26-P42		1	●	050	6929594	433,00
D4120.03-17.45F26-P42		1	●	050	6929595	433,00
D4120.03-17.86F26-P42		1	●	050	6929596	433,00
D4120.03-18.24F26-P42		1	●	050	6929597	433,00
D4120.03-19.05F26-P42		1	●	050	6929598	433,00
D4120.03-19.43F26-P42		1	●	050	6929599	433,00
D4120.03-19.84F26-P42		1	●	050	6929600	433,00
D4120.03-20.62F26-P43		1	●	050	6929601	455,00
D4120.03-21.41F26-P43		1	●	050	6929602	455,00
D4120.03-22.23F31-P43		1	●	050	6929603	455,00
D4120.03-23.01F31-P43		1	●	050	6929604	455,00
D4120.03-23.39F31-P43		1	●	050	6929605	455,00
D4120.03-23.80F31-P43		1	●	050	6929606	455,00
D4120.03-24.59F31-P44		1	●	050	6929607	455,00
D4120.03-24.99F31-P44		1	●	050	6929608	455,00
D4120.03-25.40F31-P44		1	●	050	6929609	476,00
D4120.03-26.57F31-P44		1	●	050	6929610	476,00
D4120.03-26.97F31-P44		1	●	050	6929611	476,00
D4120.03-28.17F31-P44		1	●	050	6929612	476,00
D4120.03-28.58F31-P44		1	●	050	6929613	476,00
D4120.03-29.74F31-P45		1	●	050	6929614	476,00
D4120.03-30.15F31-P45		1	●	050	6929615	476,00
D4120.03-31.75F31-P45		1	●	050	6929616	498,00
D4120.03-33.32F31-P45		1	●	050	6929617	498,00
D4120.03-34.11F31-P45		1	●	050	6929618	498,00
D4120.03-34.93F31-P45		1	●	050	6929619	498,00
D4120.03-36.09F31-P46		1	●	050	6929620	541,00
D4120.03-36.50F38-P46		1	●	050	6929621	541,00
D4120.03-38.10F38-P46		1	●	050	6929622	541,00
D4120.03-39.67F38-P46		1	●	050	6929623	541,00
D4120.03-41.28F38-P46		1	●	050	6929624	541,00
D4120.03-42.85F38-P47		1	●	050	6929625	606,00

Bezeichnung / Designation	Sorte / Grade	VE / US		Disc. Gr.	Article No.	EURO Stück / piece
D4120.03-44.45F38-P47		1	●	050	6929626	606,00
D4120.03-46.02F38-P47		1	●	050	6929627	606,00
D4120.03-47.63F38-P47		1	●	050	6929628	606,00
D4120.03-49.20F38-P47		1	●	050	6929629	606,00
D4120.03-50.80F51-P48		1	●	050	6929630	693,00
D4120.03-52.37F51-P48		1	●	050	6929631	693,00
D4120.03-53.98F51-P48		1	●	050	6929632	693,00
D4120.03-55.55F51-P48		1	●	050	6929633	693,00
D4120.03-57.15F51-P48		1	●	050	6929634	693,00
D4120.04-16.66F26-P42		1	●	050	6929642	476,00
D4120.04-17.04F26-P42		1	●	050	6929643	476,00
D4120.04-17.45F26-P42		1	●	050	6929644	476,00
D4120.04-17.86F26-P42		1	●	050	6929645	476,00
D4120.04-18.24F26-P42		1	●	050	6929646	476,00
D4120.04-19.05F26-P42		1	●	050	6929647	476,00
D4120.04-19.43F26-P42		1	●	050	6929648	476,00
D4120.04-19.84F26-P42		1	●	050	6929649	476,00
D4120.04-20.62F26-P43		1	●	050	6929650	500,00
D4120.04-21.41F26-P43		1	●	050	6929651	500,00
D4120.04-22.23F31-P43		1	●	050	6929652	500,00
D4120.04-23.01F31-P43		1	●	050	6929653	500,00
D4120.04-23.39F31-P43		1	●	050	6929654	500,00
D4120.04-23.80F31-P43		1	●	050	6929655	500,00
D4120.04-24.59F31-P44		1	●	050	6929656	500,00
D4120.04-24.99F31-P44		1	●	050	6929657	500,00
D4120.04-25.40F31-P44		1	●	050	6929658	524,00
D4120.04-26.57F31-P44		1	●	050	6929659	524,00
D4120.04-26.97F31-P44		1	●	050	6929660	524,00
D4120.04-28.17F31-P44		1	●	050	6929661	524,00
D4120.04-28.58F31-P44		1	●	050	6929662	524,00
D4120.04-29.74F31-P45		1	●	050	6929663	524,00
D4120.04-30.15F31-P45		1	●	050	6929664	524,00
D4120.04-31.75F31-P45		1	●	050	6929665	548,00
D4120.04-33.32F31-P45		1	●	050	6929666	548,00
D4120.04-34.11F31-P45		1	●	050	6929667	548,00
D4120.04-34.93F31-P45		1	●	050	6929668	548,00
D4120.04-36.09F31-P46		1	●	050	6929669	596,00
D4120.04-36.50F38-P46		1	●	050	6929670	596,00
D4120.04-38.10F38-P46		1	●	050	6929671	596,00
D4120.04-39.67F38-P46		1	●	050	6929672	596,00
D4120.04-41.28F38-P46		1	●	050	6929673	596,00
D4120.04-42.85F38-P47		1	●	050	6929674	667,00
D4120.04-44.45F38-P47		1	●	050	6929675	667,00
D4120.04-46.02F38-P47		1	●	050	6929676	667,00
D4120.04-47.63F38-P47		1	●	050	6929677	667,00
D4120.04-49.20F38-P47		1	●	050	6929678	667,00
D4120.04-50.80F51-P48		1	●	050	6929679	762,00
D4120.04-52.37F51-P48		1	●	050	6929680	762,00
D4120.04-53.98F51-P48		1	●	050	6929681	762,00
D4120.04-55.55F51-P48		1	●	050	6929682	762,00
D4120.04-57.15F51-P48		1	●	050	6929683	762,00
D4120.05-16.66F26-P42		1	●	050	6929691	541,00
D4120.05-17.04F26-P42		1	●	050	6929692	541,00
D4120.05-17.45F26-P42		1	●	050	6929693	541,00
D4120.05-17.86F26-P42		1	●	050	6929694	541,00
D4120.05-18.24F26-P42		1	●	050	6929695	541,00
D4120.05-19.05F26-P42		1	●	050	6929696	541,00
D4120.05-19.43F26-P42		1	●	050	6929697	541,00
D4120.05-19.84F26-P42		1	●	050	6929698	541,00
D4120.05-20.62F26-P43		1	●	050	6929699	568,00
D4120.05-21.41F26-P43		1	●	050	6929700	568,00
D4120.05-22.23F31-P43		1	●	050	6929701	568,00
D4120.05-23.01F31-P43		1	●	050	6929702	568,00
D4120.05-23.39F31-P43		1	●	050	6929703	568,00
D4120.05-23.80F31-P43		1	●	050	6929704	568,00
D4120.05-24.59F31-P44		1	●	050	6929705	568,00
D4120.05-24.99F31-P44		1	●	050	6929706	568,00
D4120.05-25.40F31-P44		1	●	050	6929707	596,00
D4120.05-26.57F31-P44		1	●	050	6929708	596,00
D4120.05-26.97F31-P44		1	●	050	6929709	596,00

Bezeichnung / Designation	Sorte / Grade	VE / US		Disc. Gr.	Article No.	EURO Stück / piece
D4120.05-28.17F31-P44		1	●	050	6929710	**596,00**
D4120.05-28.58F31-P44		1	●	050	6929711	**596,00**
D4120.05-29.74F31-P45		1	●	050	6929712	**596,00**
D4120.05-30.15F31-P45		1	●	050	6929713	**596,00**
D4120.05-31.75F31-P45		1	●	050	6929714	**623,00**
D4120.05-33.32F31-P45		1	●	050	6929715	**623,00**
D4120.05-34.11F31-P45		1	●	050	6929716	**623,00**
D4120.05-34.93F31-P45		1	●	050	6929717	**623,00**
D4120.05-36.09F31-P46		1	●	050	6929718	**677,00**
D4120.05-36.50F38-P46		1	●	050	6929719	**677,00**
D4120.05-38.10F38-P46		1	●	050	6929720	**677,00**
D4120.05-39.67F38-P46		1	●	050	6929721	**677,00**
D4120.05-41.28F38-P46		1	●	050	6929722	**677,00**
D4120.05-42.85F38-P47		1	●	050	6929723	**758,00**
D4120.05-44.45F38-P47		1	●	050	6929724	**758,00**
D4120.05-46.02F38-P47		1	●	050	6929725	**758,00**
D4120.05-47.63F38-P47		1	●	050	6929726	**758,00**
D4120.05-49.20F38-P47		1	●	050	6929727	**758,00**
D4120.05-50.80F51-P48		1	●	050	6929728	**866,00**
D4120.05-52.37F51-P48		1	●	050	6929729	**866,00**
D4120.05-53.98F51-P48		1	●	050	6929730	**866,00**
D4120.05-55.55F51-P48		1	●	050	6929731	**866,00**
D4120.05-57.15F51-P48		1	●	050	6929732	**866,00**
D4140-01-12.00T14-A		1	●	054	7640393	**244,00**
D4140-01-13.00T14-A		1	●	054	7640394	**250,00**
D4140-01-14.00T14-B		1	●	054	7640395	**259,00**
D4140-01-15.00T18-B		1	●	054	7640396	**271,00**
D4140-01-16.00T18-C		1	●	054	7640397	**283,00**
D4140-01-17.00T18-C		1	●	054	7640398	**298,00**
D4140-01-18.00T18-D		1	●	054	7640399	**307,00**
D4140-01-19.00T22-D		1	●	054	7640430	**319,00**
D4140-01-20.00T22-E		1	●	054	7640431	**343,00**
D4140-01-21.00T22-E		1	●	054	7640432	**357,00**
D4140-01-22.00T22-F		1	●	054	7640433	**387,00**
D4140-01-23.00T28-F		1	●	054	7640434	**408,00**
D4140-01-24.00T28-G		1	●	054	7640435	**432,00**
D4140-01-25.00T28-G		1	●	054	7640436	**453,00**
D4140-03-12.00F16-A		1	●	054	7169788	**269,00**
D4140-03-13.00F16-A		1	●	054	7169789	**276,00**
D4140-03-14.00F16-B		1	●	054	7169800	**285,00**
D4140-03-15.00F16-B		1	●	054	7169801	**298,00**
D4140-03-16.00F20-C		1	●	054	7169802	**312,00**
D4140-03-17.00F20-C		1	●	054	7169803	**328,00**
D4140-03-18.00F20-D		1	●	054	7169804	**338,00**
D4140-03-19.00F20-D		1	●	054	7169805	**351,00**
D4140-03-20.00F20-E		1	●	054	7169806	**377,00**
D4140-03-21.00F20-E		1	●	054	7169807	**394,00**
D4140-03-22.00F25-F		1	●	054	7169808	**426,00**
D4140-03-23.00F25-F		1	●	054	7169809	**449,00**
D4140-03-24.00F25-G		1	●	054	7169810	**476,00**
D4140-03-25.00F25-G		1	●	054	7169811	**499,00**
D4140-03-26.00F25-H		1	●	054	7169812	**522,00**
D4140-03-27.00F25-H		1	●	054	7169813	**541,00**
D4140-03-28.00F32-J		1	●	054	7169814	**561,00**
D4140-03-29.00F32-J		1	●	054	7169815	**581,00**
D4140-03-30.00F32-K		1	●	054	7169816	**600,00**
D4140-03-31.00F32-K		1	●	054	7169817	**623,00**
D4140-03-32.00F40-M		1	●	054	7640276	**643,00**
D4140-03-33.00F40-M		1	●	054	7640277	**663,00**
D4140-03-34.00F40-N		1	●	054	7640278	**682,00**
D4140-03-35.00F40-N		1	●	054	7640279	**715,00**
D4140-03-36.00F40-P		1	●	054	7640350	**738,00**
D4140-03-37.00F40-P		1	●	054	7640351	**758,00**
D4140-05-12.00A16-A		1	●	054	7640505	**309,00**
D4140-05-12.00F16-A		1	●	054	7169818	**309,00**
D4140-05-13.00A16-A		1	●	054	7640506	**317,00**
D4140-05-13.00F16-A		1	●	054	7169819	**317,00**
D4140-05-14.00A16-B		1	●	054	7640507	**328,00**
D4140-05-14.00F16-B		1	●	054	7169820	**328,00**
D4140-05-15.00A16-B		1	●	054	7640508	**343,00**

Bezeichnung / Designation	Sorte / Grade	VE / US		Disc. Gr.	Article No.	EURO Stück / piece
D4140-05-15.00F16-B		1	●	054	7169821	**343,00**
D4140-05-16.00A20-C		1	●	054	7640509	**358,00**
D4140-05-16.00F20-C		1	●	054	7169822	**358,00**
D4140-05-17.00A20-C		1	●	054	7640540	**377,00**
D4140-05-17.00F20-C		1	●	054	7169823	**377,00**
D4140-05-18.00A20-D		1	●	054	7640541	**388,00**
D4140-05-18.00F20-D		1	●	054	7169824	**388,00**
D4140-05-19.00A20-D		1	●	054	7640542	**403,00**
D4140-05-19.00F20-D		1	●	054	7169825	**403,00**
D4140-05-20.00A20-E		1	●	054	7640543	**434,00**
D4140-05-20.00F20-E		1	●	054	7169826	**434,00**
D4140-05-21.00A20-E		1	●	054	7640544	**452,00**
D4140-05-21.00F20-E		1	●	054	7169827	**452,00**
D4140-05-22.00A25-F		1	●	054	7640545	**490,00**
D4140-05-22.00F25-F		1	●	054	7169828	**490,00**
D4140-05-23.00A25-F		1	●	054	7640546	**517,00**
D4140-05-23.00F25-F		1	●	054	7169829	**517,00**
D4140-05-24.00A25-G		1	●	054	7640547	**547,00**
D4140-05-24.00F25-G		1	●	054	7169830	**547,00**
D4140-05-25.00A25-G		1	●	054	7640548	**573,00**
D4140-05-25.00F25-G		1	●	054	7169831	**573,00**
D4140-05-26.00A25-H		1	●	054	7640549	**600,00**
D4140-05-26.00F25-H		1	●	054	7169832	**600,00**
D4140-05-27.00A25-H		1	●	054	7640550	**622,00**
D4140-05-27.00F25-H		1	●	054	7169833	**622,00**
D4140-05-28.00A32-J		1	●	054	7640551	**645,00**
D4140-05-28.00F32-J		1	●	054	7169834	**645,00**
D4140-05-29.00A32-J		1	●	054	7640552	**667,00**
D4140-05-29.00F32-J		1	●	054	7169835	**667,00**
D4140-05-30.00A32-K		1	●	054	7640553	**690,00**
D4140-05-30.00F32-K		1	●	054	7169836	**690,00**
D4140-05-31.00A32-K		1	●	054	7640554	**716,00**
D4140-05-31.00F32-K		1	●	054	7169837	**716,00**
D4140-05-32.00F40-M		1	●	054	7640352	**739,00**
D4140-05-33.00F40-M		1	●	054	7640353	**762,00**
D4140-05-34.00F40-N		1	●	054	7640354	**784,00**
D4140-05-35.00F40-N		1	●	054	7640355	**822,00**
D4140-05-36.00F40-P		1	●	054	7640356	**848,00**
D4140-05-37.00F40-P		1	●	054	7640357	**871,00**
D4140-07-12.00A16-A		1	●	054	7640555	**371,00**
D4140-07-12.00F16-A		1	●	054	7169838	**371,00**
D4140-07-13.00A16-A		1	●	054	7640556	**380,00**
D4140-07-13.00F16-A		1	●	054	7169839	**380,00**
D4140-07-14.00A16-B		1	●	054	7640557	**394,00**
D4140-07-14.00F16-B		1	●	054	7169840	**394,00**
D4140-07-15.00A16-B		1	●	054	7640558	**412,00**
D4140-07-15.00F16-B		1	●	054	7169841	**412,00**
D4140-07-16.00A20-C		1	●	054	7640559	**430,00**
D4140-07-16.00F20-C		1	●	054	7169842	**430,00**
D4140-07-17.00A20-C		1	●	054	7640560	**452,00**
D4140-07-17.00F20-C		1	●	054	7169843	**452,00**
D4140-07-18.00A20-D		1	●	054	7640561	**466,00**
D4140-07-18.00F20-D		1	●	054	7169844	**466,00**
D4140-07-19.00A20-D		1	●	054	7640562	**484,00**
D4140-07-19.00F20-D		1	●	054	7169845	**484,00**
D4140-07-20.00A20-E		1	●	054	7640563	**520,00**
D4140-07-20.00F20-E		1	●	054	7169846	**520,00**
D4140-07-21.00A20-E		1	●	054	7640564	**543,00**
D4140-07-21.00F20-E		1	●	054	7169847	**543,00**
D4140-07-22.00A25-F		1	●	054	7640565	**588,00**
D4140-07-22.00F25-F		1	●	054	7169848	**588,00**
D4140-07-23.00A25-F		1	●	054	7640566	**620,00**
D4140-07-23.00F25-F		1	●	054	7169849	**620,00**
D4140-07-24.00A25-G		1	●	054	7640567	**656,00**
D4140-07-24.00F25-G		1	●	054	7169850	**656,00**
D4140-07-25.00A25-G		1	●	054	7640568	**688,00**
D4140-07-25.00F25-G		1	●	054	7169851	**688,00**
D4140-07-26.00A25-H		1	●	054	7640569	**719,00**
D4140-07-26.00F25-H		1	●	054	7169852	**719,00**
D4140-07-27.00A25-H		1	●	054	7640570	**747,00**

Bezeichnung / Designation	Sorte / Grade	VE / US		Disc. Gr.	Article No.	EURO Stück / piece
D4140-07-27.00F25-H		1	●	054	7169853	747,00
D4140-07-28.00A32-J		1	●	054	7640571	774,00
D4140-07-28.00F32-J		1	●	054	7169854	774,00
D4140-07-29.00A32-J		1	●	054	7640572	801,00
D4140-07-29.00F32-J		1	●	054	7169855	801,00
D4140-07-30.00A32-K		1	●	054	7640573	828,00
D4140-07-30.00F32-K		1	●	054	7169856	828,00
D4140-07-31.00A32-K		1	●	054	7640574	860,00
D4140-07-31.00F32-K		1	●	054	7169857	860,00
D4140-07-32.00F40-M		1	●	054	7640358	887,00
D4140-07-33.00F40-M		1	●	054	7640359	914,00
D4140-07-34.00F40-N		1	●	054	7640360	941,00
D4140-07-35.00F40-N		1	●	054	7640361	986,00
D4140-07-36.00F40-P		1	●	054	7640362	1.018,00
D4140-07-37.00F40-P		1	●	054	7640363	1.045,00
D4140-10-12.00F16-A		1	●	054	8061623	464,00
D4140-10-13.00F16-A		1	●	054	8061624	475,00
D4140-10-14.00F16-B		1	●	054	8061625	492,00
D4140-10-15.00F16-B		1	●	054	8061626	515,00
D4140-10-16.00F20-C		1	●	054	8061627	537,00
D4140-10-17.00F20-C		1	●	054	8061628	566,00
D4140-10-18.00F20-D		1	●	054	7508773	583,00
D4140-10-19.00F20-D		1	●	054	8061629	605,00
D4140-10-20.00F20-E		1	●	054	7508774	650,00
D4140-10-21.00F20-E		1	●	054	8061650	679,00
D4140-10-22.00F25-F		1	●	054	7508775	735,00
D4140-10-23.00F25-F		1	●	054	8061651	775,00
D4140-10-24.00F25-G		1	●	054	7508776	820,00
D4140-10-25.00F25-G		1	●	054	8061652	860,00
D4140.03-12.00A15-A		1	●	054	7640576	269,00
D4140.03-12.00F15-A		1	●	054	7508777	269,00
D4140.03-13.00A15-A		1	●	054	7640577	276,00
D4140.03-13.00F15-A		1	●	054	7508778	276,00
D4140.03-14.00A15-B		1	●	054	7640578	285,00
D4140.03-14.00F15-B		1	●	054	7508779	285,00
D4140.03-15.00A15-B		1	●	054	7640579	298,00
D4140.03-15.00F15-B		1	●	054	7508850	298,00
D4140.03-16.00A19-C		1	●	054	7640580	312,00
D4140.03-16.00F19-C		1	●	054	7508851	312,00
D4140.03-17.00A19-C		1	●	054	7640581	328,00
D4140.03-17.00F19-C		1	●	054	7508852	328,00
D4140.03-18.00A19-D		1	●	054	7640582	338,00
D4140.03-18.00F19-D		1	●	054	7508853	338,00
D4140.03-19.00A19-D		1	●	054	7640583	351,00
D4140.03-19.00F19-D		1	●	054	7508854	351,00
D4140.03-20.00A19-E		1	●	054	7640584	377,00
D4140.03-20.00F19-E		1	●	054	7508855	377,00
D4140.03-21.00A19-E		1	●	054	7640585	394,00
D4140.03-21.00F19-E		1	●	054	7508856	394,00
D4140.03-22.00A26-F		1	●	054	7640586	426,00
D4140.03-22.00F26-F		1	●	054	7508857	426,00
D4140.03-23.00F26-F		1	●	054	7508858	449,00
D4140.03-24.00A26-G		1	●	054	7640587	476,00
D4140.03-24.00F26-G		1	●	054	7508859	476,00
D4140.03-25.00F26-G		1	●	054	7508860	499,00
D4140.03-26.00A26-H		1	●	054	7640588	522,00
D4140.03-26.00F26-H		1	●	054	7508861	522,00
D4140.03-27.00F26-H		1	●	054	7508862	541,00
D4140.03-28.00A31-J		1	●	054	7640589	561,00
D4140.03-28.00F31-J		1	●	054	7508863	561,00
D4140.03-29.00F31-J		1	●	054	7508864	581,00
D4140.03-30.00A31-K		1	●	054	7640590	600,00
D4140.03-30.00F31-K		1	●	054	7508865	600,00
D4140.03-31.00F31-K		1	●	054	7508866	623,00
D4140.03-32.00F31-M		1	●	054	7640364	643,00
D4140.03-33.00F31-M		1	●	054	7640365	663,00
D4140.03-34.00F38-N		1	●	054	7640366	682,00
D4140.03-35.00F38-N		1	●	054	7640367	715,00
D4140.03-36.00F38-P		1	●	054	7640368	738,00
D4140.03-37.00F38-P		1	●	054	7640369	758,00

Bezeichnung / Designation	Sorte / Grade	VE / US		Disc. Gr.	Article No.	EURO Stück / piece
D4140.05-12.00A15-A		1	●	054	7640591	309,00
D4140.05-12.00F15-A		1	●	054	7508867	309,00
D4140.05-13.00A15-A		1	●	054	7640592	317,00
D4140.05-13.00F15-A		1	●	054	7508868	317,00
D4140.05-14.00A15-B		1	●	054	7640593	328,00
D4140.05-14.00F15-B		1	●	054	7508869	328,00
D4140.05-15.00A15-B		1	●	054	7640594	343,00
D4140.05-15.00F15-B		1	●	054	7508870	343,00
D4140.05-16.00A19-C		1	●	054	7640595	358,00
D4140.05-16.00F19-C		1	●	054	7508871	358,00
D4140.05-17.00A19-C		1	●	054	7640596	377,00
D4140.05-17.00F19-C		1	●	054	7508872	377,00
D4140.05-18.00A19-D		1	●	054	7640597	388,00
D4140.05-18.00F19-D		1	●	054	7508873	388,00
D4140.05-19.00A19-D		1	●	054	7640598	403,00
D4140.05-19.00F19-D		1	●	054	7508874	403,00
D4140.05-20.00A19-E		1	●	054	7640599	434,00
D4140.05-20.00F19-E		1	●	054	7508875	434,00
D4140.05-21.00A19-E		1	●	054	7640600	452,00
D4140.05-21.00F19-E		1	●	054	7508876	452,00
D4140.05-22.00A26-F		1	●	054	7640601	490,00
D4140.05-22.00F26-F		1	●	054	7508877	490,00
D4140.05-23.00F26-F		1	●	054	7508878	517,00
D4140.05-24.00A26-G		1	●	054	7640602	547,00
D4140.05-24.00F26-G		1	●	054	7508879	547,00
D4140.05-25.00F26-G		1	●	054	7508880	573,00
D4140.05-26.00A26-H		1	●	054	7640603	600,00
D4140.05-26.00F26-H		1	●	054	7508881	600,00
D4140.05-27.00F26-H		1	●	054	7508882	622,00
D4140.05-28.00A31-J		1	●	054	7640604	645,00
D4140.05-28.00F31-J		1	●	054	7508883	645,00
D4140.05-29.00F31-J		1	●	054	7508884	667,00
D4140.05-30.00A31-K		1	●	054	7640605	690,00
D4140.05-30.00F31-K		1	●	054	7508885	690,00
D4140.05-31.00F31-K		1	●	054	7508886	716,00
D4140.05-32.00F31-M		1	●	054	7640380	739,00
D4140.05-33.00F31-M		1	●	054	7640381	762,00
D4140.05-34.00F38-N		1	●	054	7640382	784,00
D4140.05-35.00F38-N		1	●	054	7640383	822,00
D4140.05-36.00F38-P		1	●	054	7640384	848,00
D4140.05-37.00F38-P		1	●	054	7640385	871,00
D4140.07-12.00A15-A		1	●	054	7640606	371,00
D4140.07-12.00F15-A		1	●	054	7508887	371,00
D4140.07-13.00A15-A		1	●	054	7640607	380,00
D4140.07-13.00F15-A		1	●	054	7508888	380,00
D4140.07-14.00A15-B		1	●	054	7640608	394,00
D4140.07-14.00F15-B		1	●	054	7508889	394,00
D4140.07-15.00A15-B		1	●	054	7640609	412,00
D4140.07-15.00F15-B		1	●	054	7508890	412,00
D4140.07-16.00A19-C		1	●	054	7640610	430,00
D4140.07-16.00F19-C		1	●	054	7508891	430,00
D4140.07-17.00A19-C		1	●	054	7640611	452,00
D4140.07-17.00F19-C		1	●	054	7508892	452,00
D4140.07-18.00A19-D		1	●	054	7640612	466,00
D4140.07-18.00F19-D		1	●	054	7508893	466,00
D4140.07-19.00A19-D		1	●	054	7640613	484,00
D4140.07-19.00F19-D		1	●	054	7508894	484,00
D4140.07-20.00A19-E		1	●	054	7640614	520,00
D4140.07-20.00F19-E		1	●	054	7508895	520,00
D4140.07-21.00A19-E		1	●	054	7640615	543,00
D4140.07-21.00F19-E		1	●	054	7508896	543,00
D4140.07-22.00A26-F		1	●	054	7640616	588,00
D4140.07-22.00F26-F		1	●	054	7508897	588,00
D4140.07-23.00F26-F		1	●	054	7508898	620,00
D4140.07-24.00A26-G		1	●	054	7640617	656,00
D4140.07-24.00F26-G		1	●	054	7508899	656,00
D4140.07-25.00F26-G		1	●	054	7508900	688,00
D4140.07-26.00A26-H		1	●	054	7640618	719,00
D4140.07-26.00F26-H		1	●	054	7508901	719,00
D4140.07-27.00F26-H		1	●	054	7508902	747,00

Bezeichnung / Designation	Sorte / Grade	VE / US		Disc. Gr.	Article No.	EURO Stück / piece
D4140.07-28.00A31-J		1	●	054	7640619	774,00
D4140.07-28.00F31-J		1	●	054	7508903	774,00
D4140.07-29.00F31-J		1	●	054	7508904	801,00
D4140.07-30.00A31-K		1	●	054	7640620	828,00
D4140.07-30.00F31-K		1	●	054	7508905	828,00
D4140.07-31.00F31-K		1	●	054	7508906	860,00
D4140.07-32.00F31-M		1	●	054	7640386	887,00
D4140.07-33.00F31-M		1	●	054	7640387	914,00
D4140.07-34.00F38-N		1	●	054	7640388	941,00
D4140.07-35.00F38-N		1	●	054	7640389	986,00
D4140.07-36.00F38-P		1	●	054	7640390	1.018,00
D4140.07-37.00F38-P		1	●	054	7640391	1.045,00
D4140.10-12.00F15-A		1	●	054	8061653	464,00
D4140.10-15.00F15-B		1	●	054	8061654	515,00
D4140.10-19.00F19-D		1	●	054	8061655	605,00
D4140.10-22.00F26-F		1	●	054	8061656	735,00
D4140.10-25.00F26-G		1	●	054	8061657	860,00
D4170-03-65.00N8-P45		1	●	050	6929522	1.472,00
D4170-03-68.00N8-P46		1	●	050	6929523	1.472,00
D4170-03-70.00N8-P46		1	●	050	6929524	1.601,00
D4170-03-78.00N8-P46		1	●	050	6929525	1.601,00
D4170-03-80.00N8-P45		1	●	050	6929526	1.948,00
D4240-02-12.00F20-A		1	●	054	7640470	295,00
D4240-02-14.00F20-B		1	●	054	7640471	313,00
D4240-02-15.00F20-B		1	●	054	7640472	328,00
D4240-02-17.00F20-C		1	●	054	7640473	360,00
D4240-02-19.00F20-D		1	●	054	7640474	385,00
D4240-02-21.00F20-E		1	●	054	7640475	432,00
D4240-02-24.00F25-G		1	●	054	7640476	522,00
D4240-02-26.00F25-H		1	●	054	7640477	572,00
D4240-02-29.00F32-J		1	●	054	7640478	637,00
D4580-45-06.00A12-VC09		1	●	054	6630570	490,00
D4580-45-08.00A16-VC09		1	●	054	6630571	500,00
D4580-45-10.00A16-VC09		1	●	054	6630572	508,00
D4580-45-12.00A20-VC09		1	●	054	6630573	528,00
D4580-45-14.00A20-VC09		1	●	054	6630574	549,00
D4580-45-16.00A25-VC09		1	●	054	6630575	568,00
D4580.45-06.00A13-VC09		1	●	054	6630576	490,00
D4580.45-08.00A15-VC09		1	●	054	6630577	500,00
D4580.45-10.00A15-VC09		1	●	054	6630578	508,00
D4580.45-12.00A19-VC09		1	●	054	6630579	528,00
D4580.45-14.00A19-VC09		1	●	054	6630580	549,00
D4580.45-16.00A26-VC09		1	●	054	6630581	568,00
D70611-M1	NID	1	●	THV	5201784	97,10
D70611-M1.2	NID	1	●	THV	5201785	92,10
D70611-M1.4	NID	1	●	THV	5201769	84,00
D70611-M1.6	NID	1	●	THV	5201770	83,00
D70611-M2	NID	1	●	THV	5201771	58,00
D70611-M2.5	NID	1	●	THV	5201780	57,00
D70611-M3	NID	1	●	THV	5201772	49,50
D70611-M4	NID	1	●	THV	5201774	49,50
D70611-M5	NID	1	●	THV	5201775	51,40
D70611-M6	NID	1	●	THV	5201776	51,40
D70611-M8	NID	1	●	THV	5201777	63,10
D70611-M10	NID	1	●	THV	5201778	80,50
D7061100-M1		1	●	THV	5201779	94,20
D7061100-M1.2		1	●	THV	5201781	89,40
D7061100-M1.4		1	●	THV	5201782	81,60
D7061100-M1.6		1	●	THV	5201783	80,60
D7061100-M2		1	●	THV	5201796	56,30
D7061100-M2.5		1	●	THV	5201792	55,30
D7061100-M3		1	●	THV	5201790	48,00
D7061100-M3.5		1	●	THV	5201789	49,90
D7061100-M4		1	●	THV	5201788	48,00
D7061100-M5		1	●	THV	5201787	49,90
D7061100-M6		1	●	THV	5201797	49,90
D7061100-M8		1	●	THV	5201795	61,20
D7061100-M10		1	●	THV	5201794	78,20
D70617-M3	NID	1	●	THV	5201786	61,00
D70617-M3.5	NID	1	●	THV	5201809	62,00

Bezeichnung / Designation	Sorte / Grade	VE / US		Disc. Gr.	Article No.	EURO Stück / piece
D70617-M4	NID	1	●	THV	5201808	61,00
D70617-M5	NID	1	●	THV	5201807	62,00
D70617-M6	NID	1	●	THV	5201806	62,00
D70617-M8	NID	1	●	THV	5201805	70,00
D70617-M10	NID	1	●	THV	5201804	86,90
D7061700-M3		1	●	THV	5201803	59,20
D7061700-M4		1	●	THV	5201801	59,20
D7061700-M5		1	●	THV	5201800	60,20
D7061700-M6		1	●	THV	5201799	60,20
D7061700-M8		1	●	THV	5201819	67,90
D7061700-M10		1	●	THV	5201821	84,40
D7061706-M3	TICN	1	●	THV	5201820	67,50
D7061706-M4	TICN	1	●	THV	5201818	69,40
D7061706-M5	TICN	1	●	THV	5201817	71,30
D7061706-M6	TICN	1	●	THV	5201816	72,50
D7061706-M8	TICN	1	●	THV	5201815	86,90
D7061706-M10	TICN	1	●	THV	5201814	105,00
D7063100-M3		1	●	THV	5201812	49,90
D7063100-M4		1	●	THV	5201811	50,60
D7063100-M6		1	●	THV	5201833	52,60
D7063100-M8		1	●	THV	5201832	64,00
D7063100-M10		1	●	THV	5201831	82,40
D7063700-M3		1	●	THV	5201830	63,10
D7063700-M4		1	●	THV	5201829	63,10
D7063700-M5		1	●	THV	5201828	66,00
D7063700-M6		1	●	THV	5201825	66,00
D7066706-M12	TICN	1	●	THV	5201827	112,00
D7066706-M14	TICN	1	●	THV	5201826	171,00
D7066706-M16	TICN	1	●	THV	5201824	159,00
D7166706-M8X1	TICN	1	●	THV	5200958	95,40
D7166706-M10X1	TICN	1	●	THV	5200956	99,20
D7166706-M10X1.25	TICN	1	●	THV	5200961	112,00
D7166706-M12X1	TICN	1	●	THV	5200957	119,00
D7166706-M12X1.5	TICN	1	●	THV	5200955	123,00
D7166706-M14X1.5	TICN	1	●	THV	5200954	165,00
D7166706-M16X1.5	TICN	1	●	THV	5200953	180,00
D7466706-G1/8	TICN	1	●	THV	5201835	103,00
D7466706-G1/4	TICN	1	●	THV	5201836	140,00
D7466706-G3/8	TICN	1	●	THV	5201834	169,00
D7466706-G1/2	TICN	1	●	THV	5201837	235,00
DA110-08-01.000U0-WZ90AJ	WZ90AJ	5	●	DH4	7506385	3,52
DA110-08-01.100U0-WZ90AJ	WZ90AJ	5	●	DH4	7506386	3,88
DA110-08-01.200U0-WZ90AJ	WZ90AJ	5	●	DH4	7506387	3,99
DA110-08-01.300U0-WZ90AJ	WZ90AJ	5	●	DH4	7506388	3,77
DA110-08-01.400U0-WZ90AJ	WZ90AJ	5	●	DH4	7506389	3,52
DA110-08-01.500U0-WZ90AJ	WZ90AJ	5	●	DH4	7506430	2,85
DA110-08-01.600U0-WZ90AJ	WZ90AJ	5	●	DH4	7506431	3,13
DA110-08-01.700U0-WZ90AJ	WZ90AJ	5	●	DH4	7506432	3,17
DA110-08-01.800U0-WZ90AJ	WZ90AJ	5	●	DH4	7506433	2,76
DA110-08-01.900U0-WZ90AJ	WZ90AJ	5	●	DH4	7506434	2,88
DA110-08-02.000U0-WZ90AJ	WZ90AJ	5	●	DH4	7506435	2,14
DA110-08-02.100U0-WZ90AJ	WZ90AJ	1	●	DH4	7506436	2,82
DA110-08-02.200U0-WZ90AJ	WZ90AJ	1	●	DH4	7506437	2,93
DA110-08-02.300U0-WZ90AJ	WZ90AJ	1	●	DH4	7506438	2,93
DA110-08-02.400U0-WZ90AJ	WZ90AJ	1	●	DH4	7506439	2,95
DA110-08-02.500U0-WZ90AJ	WZ90AJ	1	●	DH4	7506440	2,56
DA110-08-02.600U0-WZ90AJ	WZ90AJ	1	●	DH4	7506441	3,13
DA110-08-02.700U0-WZ90AJ	WZ90AJ	1	●	DH4	7506442	3,13
DA110-08-02.800U0-WZ90AJ	WZ90AJ	1	●	DH4	7506443	3,17
DA110-08-02.900U0-WZ90AJ	WZ90AJ	1	●	DH4	7506444	3,17
DA110-08-03.000U0-WZ90AJ	WZ90AJ	1	●	DH4	7506445	2,12
DA110-08-03.100U0-WZ90AJ	WZ90AJ	1	●	DH4	7506446	3,22
DA110-08-03.200U0-WZ90AJ	WZ90AJ	1	●	DH4	7506447	2,82
DA110-08-03.300U0-WZ90AJ	WZ90AJ	1	●	DH4	7506448	2,82
DA110-08-03.400U0-WZ90AJ	WZ90AJ	1	●	DH4	7506449	3,19
DA110-08-03.500U0-WZ90AJ	WZ90AJ	1	●	DH4	7506450	2,55
DA110-08-03.600U0-WZ90AJ	WZ90AJ	1	●	DH4	7506451	3,47
DA110-08-03.700U0-WZ90AJ	WZ90AJ	1	●	DH4	7506452	3,62
DA110-08-03.800U0-WZ90AJ	WZ90AJ	1	●	DH4	7506453	3,79
DA110-08-03.900U0-WZ90AJ	WZ90AJ	1	●	DH4	7506454	3,92

Bezeichnung / Designation	Sorte / Grade	VE / US		Disc. Gr.	Article No.	EURO Stück / piece
DA110-08-04.000U0-WZ90AJ	WZ90AJ	1	●	DH4	7506455	2,50
DA110-08-04.100U0-WZ90AJ	WZ90AJ	1	●	DH4	7506456	4,12
DA110-08-04.200U0-WZ90AJ	WZ90AJ	1	●	DH4	7506457	3,42
DA110-08-04.300U0-WZ90AJ	WZ90AJ	1	●	DH4	7506458	4,17
DA110-08-04.400U0-WZ90AJ	WZ90AJ	1	●	DH4	7506459	4,17
DA110-08-04.500U0-WZ90AJ	WZ90AJ	1	●	DH4	7506460	3,62
DA110-08-04.600U0-WZ90AJ	WZ90AJ	1	●	DH4	7506461	4,17
DA110-08-04.700U0-WZ90AJ	WZ90AJ	1	●	DH4	7506462	4,28
DA110-08-04.800U0-WZ90AJ	WZ90AJ	1	●	DH4	7506463	4,34
DA110-08-04.900U0-WZ90AJ	WZ90AJ	1	●	DH4	7506464	4,51
DA110-08-05.000U0-WZ90AJ	WZ90AJ	1	●	DH4	7506465	3,18
DA110-08-05.100U0-WZ90AJ	WZ90AJ	1	●	DH4	7506466	4,58
DA110-08-05.200U0-WZ90AJ	WZ90AJ	1	●	DH4	7506467	4,60
DA110-08-05.300U0-WZ90AJ	WZ90AJ	1	●	DH4	7506468	4,60
DA110-08-05.400U0-WZ90AJ	WZ90AJ	1	●	DH4	7506469	4,72
DA110-08-05.500U0-WZ90AJ	WZ90AJ	1	●	DH4	7506470	4,47
DA110-08-05.600U0-WZ90AJ	WZ90AJ	1	●	DH4	7506471	4,73
DA110-08-05.700U0-WZ90AJ	WZ90AJ	1	●	DH4	7506472	4,86
DA110-08-05.800U0-WZ90AJ	WZ90AJ	1	●	DH4	7506473	4,96
DA110-08-05.900U0-WZ90AJ	WZ90AJ	1	●	DH4	7506474	5,09
DA110-08-06.000U0-WZ90AJ	WZ90AJ	1	●	DH4	7506475	4,47
DA110-08-06.100U0-WZ90AJ	WZ90AJ	1	●	DH4	7506476	5,44
DA110-08-06.200U0-WZ90AJ	WZ90AJ	1	●	DH4	7506477	5,44
DA110-08-06.300U0-WZ90AJ	WZ90AJ	1	●	DH4	7506478	5,55
DA110-08-06.400U0-WZ90AJ	WZ90AJ	1	●	DH4	7506479	5,92
DA110-08-06.500U0-WZ90AJ	WZ90AJ	1	●	DH4	7506480	5,55
DA110-08-06.600U0-WZ90AJ	WZ90AJ	1	●	DH4	7506481	6,06
DA110-08-06.700U0-WZ90AJ	WZ90AJ	1	●	DH4	7506482	6,51
DA110-08-06.800U0-WZ90AJ	WZ90AJ	1	●	DH4	7506483	7,02
DA110-08-06.900U0-WZ90AJ	WZ90AJ	1	●	DH4	7506484	7,49
DA110-08-07.000U0-WZ90AJ	WZ90AJ	1	●	DH4	7506485	6,65
DA110-08-07.100U0-WZ90AJ	WZ90AJ	1	●	DH4	7506486	7,60
DA110-08-07.200U0-WZ90AJ	WZ90AJ	1	●	DH4	7506487	7,72
DA110-08-07.300U0-WZ90AJ	WZ90AJ	1	●	DH4	7506488	7,98
DA110-08-07.400U0-WZ90AJ	WZ90AJ	1	●	DH4	7506489	8,10
DA110-08-07.500U0-WZ90AJ	WZ90AJ	1	●	DH4	7506490	7,38
DA110-08-07.600U0-WZ90AJ	WZ90AJ	1	●	DH4	7506491	8,55
DA110-08-07.700U0-WZ90AJ	WZ90AJ	1	●	DH4	7506492	8,55
DA110-08-07.800U0-WZ90AJ	WZ90AJ	1	●	DH4	7506493	8,55
DA110-08-07.900U0-WZ90AJ	WZ90AJ	1	●	DH4	7506494	8,67
DA110-08-08.000U0-WZ90AJ	WZ90AJ	1	●	DH4	7506495	7,38
DA110-08-08.100U0-WZ90AJ	WZ90AJ	1	●	DH4	7506496	9,05
DA110-08-08.200U0-WZ90AJ	WZ90AJ	1	●	DH4	7506497	9,34
DA110-08-08.300U0-WZ90AJ	WZ90AJ	1	●	DH4	7506498	9,77
DA110-08-08.400U0-WZ90AJ	WZ90AJ	1	●	DH4	7506499	10,04
DA110-08-08.500U0-WZ90AJ	WZ90AJ	1	●	DH4	7506500	9,67
DA110-08-08.600U0-WZ90AJ	WZ90AJ	1	●	DH4	7506501	10,93
DA110-08-08.700U0-WZ90AJ	WZ90AJ	1	●	DH4	7506502	11,12
DA110-08-08.800U0-WZ90AJ	WZ90AJ	1	●	DH4	7506503	11,48
DA110-08-08.900U0-WZ90AJ	WZ90AJ	1	●	DH4	7506504	11,89
DA110-08-09.000U0-WZ90AJ	WZ90AJ	1	●	DH4	7506505	10,37
DA110-08-09.100U0-WZ90AJ	WZ90AJ	1	●	DH4	7506506	11,99
DA110-08-09.200U0-WZ90AJ	WZ90AJ	1	●	DH4	7506507	12,14
DA110-08-09.300U0-WZ90AJ	WZ90AJ	1	●	DH4	7506508	12,31
DA110-08-09.400U0-WZ90AJ	WZ90AJ	1	●	DH4	7506509	12,59
DA110-08-09.500U0-WZ90AJ	WZ90AJ	1	●	DH4	7506510	11,89
DA110-08-09.600U0-WZ90AJ	WZ90AJ	1	●	DH4	7506511	13,04
DA110-08-09.700U0-WZ90AJ	WZ90AJ	1	●	DH4	7506512	13,29
DA110-08-09.800U0-WZ90AJ	WZ90AJ	1	●	DH4	7506513	14,28
DA110-08-09.900U0-WZ90AJ	WZ90AJ	1	●	DH4	7506514	14,53
DA110-08-10.000U0-WZ90AJ	WZ90AJ	1	●	DH4	7506515	12,59
DA110-08-10.100U0-WZ90AJ	WZ90AJ	1	●	DH4	7506516	14,21
DA110-08-10.200U0-WZ90AJ	WZ90AJ	1	●	DH4	7506517	13,89
DA110-08-10.300U0-WZ90AJ	WZ90AJ	1	●	DH4	7506518	14,77
DA110-08-10.400U0-WZ90AJ	WZ90AJ	1	●	DH4	7506519	14,99
DA110-08-10.500U0-WZ90AJ	WZ90AJ	1	●	DH4	7506520	14,24
DA110-08-10.700U0-WZ90AJ	WZ90AJ	1	●	DH4	7506521	15,56
DA110-08-10.800U0-WZ90AJ	WZ90AJ	1	●	DH4	7506522	15,89
DA110-08-11.000U0-WZ90AJ	WZ90AJ	1	●	DH4	7506523	16,46
DA110-08-11.100U0-WZ90AJ	WZ90AJ	1	●	DH4	7506524	17,05

Bezeichnung / Designation	Sorte / Grade	VE / US		Disc. Gr.	Article No.	EURO Stück / piece
DA110-08-11.300U0-WZ90AJ	WZ90AJ	1	●	DH4	7506525	17,38
DA110-08-11.500U0-WZ90AJ	WZ90AJ	1	●	DH4	7506526	17,87
DA110-08-11.800U0-WZ90AJ	WZ90AJ	1	●	DH4	7506527	18,97
DA110-08-12.000U0-WZ90AJ	WZ90AJ	1	●	DH4	7506528	19,69
DA110-08-12.100U0-WZ90AJ	WZ90AJ	1	●	DH4	7506529	20,80
DA110-08-12.200U0-WZ90AJ	WZ90AJ	1	●	DH4	7506530	21,13
DA110-08-12.500U0-WZ90AJ	WZ90AJ	1	●	DH4	7506531	22,37
DA110-08-13.000U0-WZ90AJ	WZ90AJ	1	●	DH4	7506532	24,48
DA110-08-13.500U0-WZ90AJ	WZ90AJ	1	●	DH4	7506533	27,50
DA110-08-13.700U0-WZ90AJ	WZ90AJ	1	●	DH4	7506534	29,60
DA110-08-14.000U0-WZ90AJ	WZ90AJ	1	●	DH4	7506535	31,60
DA110-08-14.500U0-WZ90AJ	WZ90AJ	1	●	DH4	7506536	34,40
DA110-08-15.000U0-WZ90AJ	WZ90AJ	1	●	DH4	7506537	36,50
DA110-08-15.500U0-WZ90AJ	WZ90AJ	1	●	DH4	7506538	39,80
DA110-08-16.000U0-WZ90AJ	WZ90AJ	1	●	DH4	7506539	42,90
DA110-SET-1-10.5-WZ90AJ	WZ90AJ	1	●	ZS2	7506540	65,40
DA110-SET-1-13-WZ90AJ	WZ90AJ	1	●	ZS2	7506541	123,00
DB130-05-00.100U0-WJ30UU	WJ30UU	5	●	D20	7233383	33,40
DB130-05-00.110U0-WJ30UU	WJ30UU	5	●	D20	7233384	33,40
DB130-05-00.120U0-WJ30UU	WJ30UU	5	●	D20	7233385	33,40
DB130-05-00.130U0-WJ30UU	WJ30UU	5	●	D20	7233386	33,40
DB130-05-00.140U0-WJ30UU	WJ30UU	5	●	D20	7233387	33,40
DB130-05-00.150U0-WJ30UU	WJ30UU	5	●	D20	7233388	32,50
DB130-05-00.160U0-WJ30UU	WJ30UU	5	●	D20	7233389	32,50
DB130-05-00.170U0-WJ30UU	WJ30UU	5	●	D20	7233400	32,50
DB130-05-00.180U0-WJ30UU	WJ30UU	5	●	D20	7233401	32,50
DB130-05-00.190U0-WJ30UU	WJ30UU	5	●	D20	7233402	32,50
DB130-05-00.200U0-WJ30UU	WJ30UU	5	●	D20	7233403	18,06
DB130-05-00.210U0-WJ30UU	WJ30UU	5	●	D20	7233404	25,00
DB130-05-00.220U0-WJ30UU	WJ30UU	5	●	D20	7233405	25,00
DB130-05-00.230U0-WJ30UU	WJ30UU	5	●	D20	7233406	25,00
DB130-05-00.240U0-WJ30UU	WJ30UU	5	●	D20	7233407	22,87
DB130-05-00.250U0-WJ30UU	WJ30UU	5	●	D20	7233408	22,87
DB130-05-00.260U0-WJ30UU	WJ30UU	5	●	D20	7233409	22,87
DB130-05-00.270U0-WJ30UU	WJ30UU	5	●	D20	7233410	25,00
DB130-05-00.280U0-WJ30UU	WJ30UU	5	●	D20	7233411	22,87
DB130-05-00.290U0-WJ30UU	WJ30UU	5	●	D20	7233412	25,00
DB130-05-00.300U0-WJ30UU	WJ30UU	5	●	D20	7233413	18,06
DB130-05-00.310U0-WJ30UU	WJ30UU	5	●	D20	7233414	25,00
DB130-05-00.320U0-WJ30UU	WJ30UU	5	●	D20	7233415	25,00
DB130-05-00.330U0-WJ30UU	WJ30UU	5	●	D20	7233416	22,87
DB130-05-00.340U0-WJ30UU	WJ30UU	5	●	D20	7233417	25,00
DB130-05-00.350U0-WJ30UU	WJ30UU	5	●	D20	7233418	22,87
DB130-05-00.360U0-WJ30UU	WJ30UU	5	●	D20	7233419	25,00
DB130-05-00.370U0-WJ30UU	WJ30UU	5	●	D20	7233420	25,00
DB130-05-00.380U0-WJ30UU	WJ30UU	5	●	D20	7233421	25,00
DB130-05-00.390U0-WJ30UU	WJ30UU	5	●	D20	7233422	25,00
DB130-05-00.400U0-WJ30UU	WJ30UU	5	●	D20	7233423	18,06
DB130-05-00.410U0-WJ30UU	WJ30UU	5	●	D20	7233424	25,00
DB130-05-00.420U0-WJ30UU	WJ30UU	5	●	D20	7233425	25,00
DB130-05-00.430U0-WJ30UU	WJ30UU	5	●	D20	7233426	25,00
DB130-05-00.440U0-WJ30UU	WJ30UU	5	●	D20	7233427	25,00
DB130-05-00.450U0-WJ30UU	WJ30UU	5	●	D20	7233428	22,87
DB130-05-00.460U0-WJ30UU	WJ30UU	5	●	D20	7233429	25,00
DB130-05-00.470U0-WJ30UU	WJ30UU	5	●	D20	7233430	25,00
DB130-05-00.480U0-WJ30UU	WJ30UU	5	●	D20	7233431	25,00
DB130-05-00.490U0-WJ30UU	WJ30UU	5	●	D20	7233432	25,00
DB130-05-00.500U0-WJ30UU	WJ30UU	5	●	D20	7233433	18,06
DB130-05-00.510U0-WJ30UU	WJ30UU	5	●	D20	7233434	25,00
DB130-05-00.520U0-WJ30UU	WJ30UU	5	●	D20	7233435	25,00
DB130-05-00.530U0-WJ30UU	WJ30UU	5	●	D20	7233436	25,00
DB130-05-00.540U0-WJ30UU	WJ30UU	5	●	D20	7233437	25,00
DB130-05-00.550U0-WJ30UU	WJ30UU	5	●	D20	7233438	25,00
DB130-05-00.560U0-WJ30UU	WJ30UU	5	●	D20	7233439	25,00
DB130-05-00.570U0-WJ30UU	WJ30UU	5	●	D20	7233440	25,00
DB130-05-00.580U0-WJ30UU	WJ30UU	5	●	D20	7233441	25,00
DB130-05-00.590U0-WJ30UU	WJ30UU	5	●	D20	7233442	25,00
DB130-05-00.600U0-WJ30UU	WJ30UU	5	●	D20	7233443	14,94
DB130-05-00.610U0-WJ30UU	WJ30UU	5	●	D20	7233444	23,69
DB130-05-00.620U0-WJ30UU	WJ30UU	5	●	D20	7233445	23,69

Bezeichnung / Designation	Sorte / Grade	VE / US		Disc. Gr.	Article No.	EURO Stück / piece
DB130-05-00.630U0-WJ30UU	WJ30UU	5	●	D20	7233446	23,69
DB130-05-00.640U0-WJ30UU	WJ30UU	5	●	D20	7233447	23,69
DB130-05-00.650U0-WJ30UU	WJ30UU	5	●	D20	7233448	23,69
DB130-05-00.660U0-WJ30UU	WJ30UU	5	●	D20	7233449	23,69
DB130-05-00.670U0-WJ30UU	WJ30UU	5	●	D20	7233450	23,69
DB130-05-00.680U0-WJ30UU	WJ30UU	5	●	D20	7233451	23,69
DB130-05-00.690U0-WJ30UU	WJ30UU	5	●	D20	7233452	23,69
DB130-05-00.700U0-WJ30UU	WJ30UU	5	●	D20	7233453	14,94
DB130-05-00.710U0-WJ30UU	WJ30UU	5	●	D20	7233454	23,69
DB130-05-00.720U0-WJ30UU	WJ30UU	5	●	D20	7233455	23,69
DB130-05-00.730U0-WJ30UU	WJ30UU	5	●	D20	7233456	23,69
DB130-05-00.740U0-WJ30UU	WJ30UU	5	●	D20	7233457	23,69
DB130-05-00.750U0-WJ30UU	WJ30UU	5	●	D20	7233458	14,94
DB130-05-00.760U0-WJ30UU	WJ30UU	5	●	D20	7233459	23,69
DB130-05-00.770U0-WJ30UU	WJ30UU	5	●	D20	7233460	23,69
DB130-05-00.780U0-WJ30UU	WJ30UU	5	●	D20	7233461	23,69
DB130-05-00.790U0-WJ30UU	WJ30UU	5	●	D20	7233462	23,69
DB130-05-00.800U0-WJ30UU	WJ30UU	5	●	D20	7233463	14,94
DB130-05-00.810U0-WJ30UU	WJ30UU	5	●	D20	7233464	22,87
DB130-05-00.820U0-WJ30UU	WJ30UU	5	●	D20	7233465	23,69
DB130-05-00.830U0-WJ30UU	WJ30UU	5	●	D20	7233466	22,87
DB130-05-00.840U0-WJ30UU	WJ30UU	5	●	D20	7233467	23,69
DB130-05-00.850U0-WJ30UU	WJ30UU	5	●	D20	7233468	25,00
DB130-05-00.860U0-WJ30UU	WJ30UU	5	●	D20	7233469	27,20
DB130-05-00.870U0-WJ30UU	WJ30UU	5	●	D20	7233470	27,20
DB130-05-00.880U0-WJ30UU	WJ30UU	5	●	D20	7233471	27,20
DB130-05-00.890U0-WJ30UU	WJ30UU	5	●	D20	7233472	27,20
DB130-05-00.900U0-WJ30UU	WJ30UU	5	●	D20	7233473	14,94
DB130-05-00.910U0-WJ30UU	WJ30UU	5	●	D20	7233474	27,20
DB130-05-00.920U0-WJ30UU	WJ30UU	5	●	D20	7233475	27,20
DB130-05-00.930U0-WJ30UU	WJ30UU	5	●	D20	7233476	27,20
DB130-05-00.940U0-WJ30UU	WJ30UU	5	●	D20	7233477	27,20
DB130-05-00.950U0-WJ30UU	WJ30UU	5	●	D20	7233478	27,20
DB130-05-00.960U0-WJ30UU	WJ30UU	5	●	D20	7233479	27,20
DB130-05-00.970U0-WJ30UU	WJ30UU	5	●	D20	7233480	27,20
DB130-05-00.980U0-WJ30UU	WJ30UU	5	●	D20	7233481	27,20
DB130-05-00.990U0-WJ30UU	WJ30UU	5	●	D20	7233482	27,20
DB130-05-01.000U0-WJ30UU	WJ30UU	5	●	D20	7233483	14,94
DB130-05-01.050U0-WJ30UU	WJ30UU	5	●	D20	7233484	27,20
DB130-05-01.100U0-WJ30UU	WJ30UU	5	●	D20	7233485	14,94
DB130-05-01.150U0-WJ30UU	WJ30UU	5	●	D20	7233486	19,84
DB130-05-01.200U0-WJ30UU	WJ30UU	5	●	D20	7233487	14,94
DB130-05-01.250U0-WJ30UU	WJ30UU	5	●	D20	7233488	27,20
DB130-05-01.300U0-WJ30UU	WJ30UU	5	●	D20	7233489	14,94
DB130-05-01.350U0-WJ30UU	WJ30UU	5	●	D20	7233490	26,30
DB130-05-01.400U0-WJ30UU	WJ30UU	5	●	D20	7233491	14,94
DB130-05-01.450U0-WJ30UU	WJ30UU	5	●	D20	7233492	27,20
DB131-02-00.500A0-WJ30EL	WJ30EL	1	●	D30	7650575	59,80
DB131-02-00.600A0-WJ30EL	WJ30EL	1	●	D30	7650576	59,80
DB131-02-00.700A0-WJ30EL	WJ30EL	1	●	D30	7650577	59,80
DB131-02-00.750A0-WJ30EL	WJ30EL	1	●	D30	7650578	59,80
DB131-02-00.794A0-WJ30EL	WJ30EL	1	●	D30	7650579	59,80
DB131-02-00.800A0-WJ30EL	WJ30EL	1	●	D30	7650700	59,80
DB131-02-00.850A0-WJ30EL	WJ30EL	1	●	D30	7650701	59,80
DB131-02-00.900A0-WJ30EL	WJ30EL	1	●	D30	7650702	59,80
DB131-02-00.950A0-WJ30EL	WJ30EL	1	●	D30	7650703	59,80
DB131-02-01.000A0-WJ30EL	WJ30EL	1	●	D30	7650704	59,80
DB131-02-01.050A0-WJ30EL	WJ30EL	1	●	D30	7650705	59,80
DB131-02-01.100A0-WJ30EL	WJ30EL	1	●	D30	7650706	59,80
DB131-02-01.150A0-WJ30EL	WJ30EL	1	●	D30	7650707	59,80
DB131-02-01.191A0-WJ30EL	WJ30EL	1	●	D30	7650708	59,80
DB131-02-01.200A0-WJ30EL	WJ30EL	1	●	D30	7650709	59,80
DB131-02-01.250A0-WJ30EL	WJ30EL	1	●	D30	7650710	59,80
DB131-02-01.300A0-WJ30EL	WJ30EL	1	●	D30	7650711	59,80
DB131-02-01.350A0-WJ30EL	WJ30EL	1	●	D30	7650712	59,80
DB131-02-01.400A0-WJ30EL	WJ30EL	1	●	D30	7650713	59,80
DB131-02-01.450A0-WJ30EL	WJ30EL	1	●	D30	7650714	59,80
DB131-02-01.500A0-WJ30EL	WJ30EL	1	●	D30	7650715	59,80
DB131-02-01.550A0-WJ30EL	WJ30EL	1	●	D30	7650716	59,80
DB131-02-01.588A0-WJ30EL	WJ30EL	1	●	D30	7650717	59,80

Bezeichnung / Designation	Sorte / Grade	VE / US		Disc. Gr.	Article No.	EURO Stück / piece
DB131-02-01.600A0-WJ30EL	WJ30EL	1	●	D30	7650718	59,80
DB131-02-01.650A0-WJ30EL	WJ30EL	1	●	D30	7650719	59,80
DB131-02-01.700A0-WJ30EL	WJ30EL	1	●	D30	7650720	59,80
DB131-02-01.750A0-WJ30EL	WJ30EL	1	●	D30	7650721	59,80
DB131-02-01.800A0-WJ30EL	WJ30EL	1	●	D30	7650722	59,80
DB131-02-01.850A0-WJ30EL	WJ30EL	1	●	D30	7650723	59,80
DB131-02-01.900A0-WJ30EL	WJ30EL	1	●	D30	7650724	59,80
DB131-02-01.950A0-WJ30EL	WJ30EL	1	●	D30	7650725	59,80
DB131-02-01.984A0-WJ30EL	WJ30EL	1	●	D30	7650726	59,80
DB131-02-02.000A1-WJ30EL	WJ30EL	1	●	D30	8254284	78,90
DB131-02-02.050A1-WJ30EL	WJ30EL	1	●	D30	8254334	91,50
DB131-02-02.100A1-WJ30EL	WJ30EL	1	●	D30	8254285	91,50
DB131-02-02.150A1-WJ30EL	WJ30EL	1	●	D30	8254335	91,50
DB131-02-02.200A1-WJ30EL	WJ30EL	1	●	D30	8254286	91,50
DB131-02-02.250A1-WJ30EL	WJ30EL	1	●	D30	8254336	91,50
DB131-02-02.300A1-WJ30EL	WJ30EL	1	●	D30	8254287	91,50
DB131-02-02.350A1-WJ30EL	WJ30EL	1	●	D30	8254337	91,50
DB131-02-02.381A1-WJ30EL	WJ30EL	1	●	D30	8254338	91,50
DB131-02-02.400A1-WJ30EL	WJ30EL	1	●	D30	8254288	91,50
DB131-02-02.450A1-WJ30EL	WJ30EL	1	●	D30	8254339	91,50
DB131-02-02.500A1-WJ30EL	WJ30EL	1	●	D30	8254289	91,50
DB131-02-02.550A1-WJ30EL	WJ30EL	1	●	D30	8254340	91,50
DB131-02-02.600A1-WJ30EL	WJ30EL	1	●	D30	8254330	91,50
DB131-02-02.650A1-WJ30EL	WJ30EL	1	●	D30	8254341	91,50
DB131-02-02.700A1-WJ30EL	WJ30EL	1	●	D30	8254331	91,50
DB131-02-02.750A1-WJ30EL	WJ30EL	1	●	D30	8254342	91,50
DB131-02-02.778A1-WJ30EL	WJ30EL	1	●	D30	8254343	91,50
DB131-02-02.800A1-WJ30EL	WJ30EL	1	●	D30	8254332	91,50
DB131-02-02.850A1-WJ30EL	WJ30EL	1	●	D30	8254344	91,50
DB131-02-02.900A1-WJ30EL	WJ30EL	1	●	D30	8254333	91,50
DB131-02-02.950A1-WJ30EL	WJ30EL	1	●	D30	8254345	91,50
DB133-05-00.500A0-WJ30EL	WJ30EL	1	●	D30	6712840	57,70
DB133-05-00.550A0-WJ30EL	WJ30EL	1	●	D30	6712841	57,70
DB133-05-00.600A0-WJ30EL	WJ30EL	1	●	D30	6712842	57,70
DB133-05-00.650A0-WJ30EL	WJ30EL	1	●	D30	6712843	57,70
DB133-05-00.700A0-WJ30EL	WJ30EL	1	●	D30	6712844	57,70
DB133-05-00.700A1-WJ30EL	WJ30EL	1	●	D30	7577837	102,00
DB133-05-00.750A0-WJ30EL	WJ30EL	1	●	D30	6712845	57,70
DB133-05-00.750A1-WJ30EL	WJ30EL	1	●	D30	7577838	102,00
DB133-05-00.794A0-WJ30EL	WJ30EL	1	●	D30	6712846	57,70
DB133-05-00.794A1-WJ30EL	WJ30EL	1	●	D30	7577839	102,00
DB133-05-00.800A0-WJ30EL	WJ30EL	1	●	D30	6712847	57,70
DB133-05-00.800A1-WJ30EL	WJ30EL	1	●	D30	7577840	102,00
DB133-05-00.850A0-WJ30EL	WJ30EL	1	●	D30	6712848	57,70
DB133-05-00.850A1-WJ30EL	WJ30EL	1	●	D30	7577841	102,00
DB133-05-00.880A0-WJ30EL	WJ30EL	1	●	D30	6712849	57,70
DB133-05-00.900A0-WJ30EL	WJ30EL	1	●	D30	6712850	57,70
DB133-05-00.900A1-WJ30EL	WJ30EL	1	●	D30	7577842	102,00
DB133-05-00.950A0-WJ30EL	WJ30EL	1	●	D30	6712851	57,70
DB133-05-00.950A1-WJ30EL	WJ30EL	1	●	D30	7577843	102,00
DB133-05-01.000A0-WJ30EL	WJ30EL	1	●	D30	6712852	57,70
DB133-05-01.000A1-WJ30EL	WJ30EL	1	●	D30	7577844	102,00
DB133-05-01.050A0-WJ30EL	WJ30EL	1	●	D30	6712853	57,70
DB133-05-01.050A1-WJ30EL	WJ30EL	1	●	D30	7577845	102,00
DB133-05-01.080A0-WJ30EL	WJ30EL	1	●	D30	6712854	57,70
DB133-05-01.100A0-WJ30EL	WJ30EL	1	●	D30	6712855	57,70
DB133-05-01.100A1-WJ30EL	WJ30EL	1	●	D30	7577846	102,00
DB133-05-01.150A0-WJ30EL	WJ30EL	1	●	D30	6712856	57,70
DB133-05-01.150A1-WJ30EL	WJ30EL	1	●	D30	7577847	102,00
DB133-05-01.191A0-WJ30EL	WJ30EL	1	●	D30	6712857	57,70
DB133-05-01.191A1-WJ30EL	WJ30EL	1	●	D30	7577848	102,00
DB133-05-01.200A0-WJ30EL	WJ30EL	1	●	D30	6712858	57,70
DB133-05-01.200A1-WJ30EL	WJ30EL	1	●	D30	7577849	102,00
DB133-05-01.250A0-WJ30EL	WJ30EL	1	●	D30	6712859	57,70
DB133-05-01.250A1-WJ30EL	WJ30EL	1	●	D30	7577850	102,00
DB133-05-01.300A0-WJ30EL	WJ30EL	1	●	D30	6712860	57,70
DB133-05-01.300A1-WJ30EL	WJ30EL	1	●	D30	7577851	102,00
DB133-05-01.350A0-WJ30EL	WJ30EL	1	●	D30	6712861	57,70
DB133-05-01.350A1-WJ30EL	WJ30EL	1	●	D30	7577852	102,00
DB133-05-01.400A0-WJ30EL	WJ30EL	1	●	D30	6712862	57,70

Bezeichnung / Designation	Sorte / Grade	VE / US		Disc. Gr.	Article No.	EURO Stück / piece
DB133-05-01.400A1-WJ30EL	WJ30EL	1	●	D30	7577853	102,00
DB133-05-01.450A0-WJ30EL	WJ30EL	1	●	D30	6712863	57,70
DB133-05-01.450A1-WJ30EL	WJ30EL	1	●	D30	7577854	102,00
DB133-05-01.500A0-WJ30EL	WJ30EL	1	●	D30	6712864	57,70
DB133-05-01.500A1-WJ30EL	WJ30EL	1	●	D30	7577855	102,00
DB133-05-01.550A0-WJ30EL	WJ30EL	1	●	D30	6712865	57,70
DB133-05-01.550A1-WJ30EL	WJ30EL	1	●	D30	7577856	102,00
DB133-05-01.588A0-WJ30EL	WJ30EL	1	●	D30	6712866	57,70
DB133-05-01.588A1-WJ30EL	WJ30EL	1	●	D30	7577857	102,00
DB133-05-01.600A0-WJ30EL	WJ30EL	1	●	D30	6712867	57,70
DB133-05-01.600A1-WJ30EL	WJ30EL	1	●	D30	7577858	102,00
DB133-05-01.650A0-WJ30EL	WJ30EL	1	●	D30	6712868	57,70
DB133-05-01.650A1-WJ30EL	WJ30EL	1	●	D30	7577859	102,00
DB133-05-01.700A0-WJ30EL	WJ30EL	1	●	D30	6712869	57,70
DB133-05-01.700A1-WJ30EL	WJ30EL	1	●	D30	7577860	102,00
DB133-05-01.750A0-WJ30EL	WJ30EL	1	●	D30	6712870	57,70
DB133-05-01.750A1-WJ30EL	WJ30EL	1	●	D30	7577861	102,00
DB133-05-01.800A0-WJ30EL	WJ30EL	1	●	D30	6712871	57,70
DB133-05-01.800A1-WJ30EL	WJ30EL	1	●	D30	7577862	102,00
DB133-05-01.820A0-WJ30EL	WJ30EL	1	●	D30	6712872	57,70
DB133-05-01.850A0-WJ30EL	WJ30EL	1	●	D30	6712873	57,70
DB133-05-01.850A1-WJ30EL	WJ30EL	1	●	D30	7577863	102,00
DB133-05-01.900A0-WJ30EL	WJ30EL	1	●	D30	6712874	57,70
DB133-05-01.900A1-WJ30EL	WJ30EL	1	●	D30	7577864	102,00
DB133-05-01.950A0-WJ30EL	WJ30EL	1	●	D30	6712875	57,70
DB133-05-01.950A1-WJ30EL	WJ30EL	1	●	D30	7577865	102,00
DB133-05-01.984A0-WJ30EL	WJ30EL	1	●	D30	6712876	57,70
DB133-05-01.984A1-WJ30EL	WJ30EL	1	●	D30	7577866	102,00
DB133-05-02.000A0-WJ30EL	WJ30EL	1	●	D30	6712877	57,70
DB133-05-02.000A1-WJ30EL	WJ30EL	1	●	D30	8184723	98,60
DB133-05-02.050A0-WJ30EL	WJ30EL	1	●	D30	6712878	66,90
DB133-05-02.050A1-WJ30EL	WJ30EL	1	●	D30	8184724	114,00
DB133-05-02.100A0-WJ30EL	WJ30EL	1	●	D30	6712879	66,90
DB133-05-02.100A1-WJ30EL	WJ30EL	1	●	D30	8184725	114,00
DB133-05-02.150A0-WJ30EL	WJ30EL	1	●	D30	6712880	66,90
DB133-05-02.150A1-WJ30EL	WJ30EL	1	●	D30	8184726	114,00
DB133-05-02.200A0-WJ30EL	WJ30EL	1	●	D30	6712881	66,90
DB133-05-02.200A1-WJ30EL	WJ30EL	1	●	D30	8184727	114,00
DB133-05-02.250A0-WJ30EL	WJ30EL	1	●	D30	6712882	66,90
DB133-05-02.250A1-WJ30EL	WJ30EL	1	●	D30	8184728	114,00
DB133-05-02.300A0-WJ30EL	WJ30EL	1	●	D30	6712883	66,90
DB133-05-02.300A1-WJ30EL	WJ30EL	1	●	D30	8184729	114,00
DB133-05-02.350A0-WJ30EL	WJ30EL	1	●	D30	6712884	66,90
DB133-05-02.350A1-WJ30EL	WJ30EL	1	●	D30	8184740	114,00
DB133-05-02.381A0-WJ30EL	WJ30EL	1	●	D30	6712885	66,90
DB133-05-02.381A1-WJ30EL	WJ30EL	1	●	D30	8184741	114,00
DB133-05-02.400A0-WJ30EL	WJ30EL	1	●	D30	6712886	66,90
DB133-05-02.400A1-WJ30EL	WJ30EL	1	●	D30	8184742	114,00
DB133-05-02.450A0-WJ30EL	WJ30EL	1	●	D30	6712887	66,90
DB133-05-02.450A1-WJ30EL	WJ30EL	1	●	D30	8184743	114,00
DB133-05-02.500A0-WJ30EL	WJ30EL	1	●	D30	6712888	66,90
DB133-05-02.500A1-WJ30EL	WJ30EL	1	●	D30	8184744	114,00
DB133-05-02.550A0-WJ30EL	WJ30EL	1	●	D30	6712889	66,90
DB133-05-02.550A1-WJ30EL	WJ30EL	1	●	D30	8184745	114,00
DB133-05-02.600A0-WJ30EL	WJ30EL	1	●	D30	6712890	66,90
DB133-05-02.600A1-WJ30EL	WJ30EL	1	●	D30	8184746	114,00
DB133-05-02.650A0-WJ30EL	WJ30EL	1	●	D30	6712891	66,90
DB133-05-02.650A1-WJ30EL	WJ30EL	1	●	D30	8184747	114,00
DB133-05-02.700A0-WJ30EL	WJ30EL	1	●	D30	6712892	66,90
DB133-05-02.700A1-WJ30EL	WJ30EL	1	●	D30	8184748	114,00
DB133-05-02.750A0-WJ30EL	WJ30EL	1	●	D30	6712893	66,90
DB133-05-02.750A1-WJ30EL	WJ30EL	1	●	D30	8184749	114,00
DB133-05-02.778A0-WJ30EL	WJ30EL	1	●	D30	6712894	66,90
DB133-05-02.778A1-WJ30EL	WJ30EL	1	●	D30	8184750	114,00
DB133-05-02.800A0-WJ30EL	WJ30EL	1	●	D30	6712895	66,90
DB133-05-02.800A1-WJ30EL	WJ30EL	1	●	D30	8184751	114,00
DB133-05-02.850A0-WJ30EL	WJ30EL	1	●	D30	6712896	66,90
DB133-05-02.850A1-WJ30EL	WJ30EL	1	●	D30	8184752	114,00
DB133-05-02.900A0-WJ30EL	WJ30EL	1	●	D30	6712897	66,90
DB133-05-02.900A1-WJ30EL	WJ30EL	1	●	D30	8184753	114,00

Bezeichnung / Designation	Sorte / Grade	VE / US		Disc. Gr.	Article No.	EURO Stück / piece
DB133-05-02.950A0-WJ30EL	WJ30EL	1	●	D30	6712898	66,90
DB133-05-02.950A1-WJ30EL	WJ30EL	1	●	D30	8184754	114,00
DB133-08-00.500A0-WJ30ER	WJ30ER	1	●	D31	6712899	77,90
DB133-08-00.600A0-WJ30ER	WJ30ER	1	●	D31	6712900	77,90
DB133-08-00.700A0-WJ30ER	WJ30ER	1	●	D31	6712901	77,90
DB133-08-00.700A1-WJ30ER	WJ30ER	1	●	D31	7577867	138,00
DB133-08-00.750A0-WJ30ER	WJ30ER	1	●	D31	6712902	77,90
DB133-08-00.750A1-WJ30ER	WJ30ER	1	●	D31	7577868	138,00
DB133-08-00.794A0-WJ30ER	WJ30ER	1	●	D31	6712903	77,90
DB133-08-00.794A1-WJ30ER	WJ30ER	1	●	D31	7577869	138,00
DB133-08-00.800A0-WJ30ER	WJ30ER	1	●	D31	6712904	77,90
DB133-08-00.800A1-WJ30ER	WJ30ER	1	●	D31	7577870	138,00
DB133-08-00.850A1-WJ30ER	WJ30ER	1	●	D31	7577871	138,00
DB133-08-00.880A0-WJ30ER	WJ30ER	1	●	D31	6712905	77,90
DB133-08-00.900A0-WJ30ER	WJ30ER	1	●	D31	6712906	77,90
DB133-08-00.900A1-WJ30ER	WJ30ER	1	●	D31	7577872	138,00
DB133-08-00.950A0-WJ30ER	WJ30ER	1	●	D31	6712907	77,90
DB133-08-00.950A1-WJ30ER	WJ30ER	1	●	D31	7577873	138,00
DB133-08-01.000A0-WJ30ER	WJ30ER	1	●	D31	6712908	77,90
DB133-08-01.000A1-WJ30ER	WJ30ER	1	●	D31	7577874	138,00
DB133-08-01.050A0-WJ30ER	WJ30ER	1	●	D31	6712909	77,90
DB133-08-01.050A1-WJ30ER	WJ30ER	1	●	D31	7577875	138,00
DB133-08-01.100A0-WJ30ER	WJ30ER	1	●	D31	6712910	77,90
DB133-08-01.100A1-WJ30ER	WJ30ER	1	●	D31	7577876	138,00
DB133-08-01.150A1-WJ30ER	WJ30ER	1	●	D31	7577877	138,00
DB133-08-01.191A0-WJ30ER	WJ30ER	1	●	D31	6712911	77,90
DB133-08-01.191A1-WJ30ER	WJ30ER	1	●	D31	7577878	138,00
DB133-08-01.200A0-WJ30ER	WJ30ER	1	●	D31	6712912	77,90
DB133-08-01.200A1-WJ30ER	WJ30ER	1	●	D31	7577879	138,00
DB133-08-01.250A0-WJ30ER	WJ30ER	1	●	D31	6712913	77,90
DB133-08-01.250A1-WJ30ER	WJ30ER	1	●	D31	7577880	138,00
DB133-08-01.300A0-WJ30ER	WJ30ER	1	●	D31	6712914	77,90
DB133-08-01.300A1-WJ30ER	WJ30ER	1	●	D31	7577881	138,00
DB133-08-01.350A0-WJ30ER	WJ30ER	1	●	D31	6712915	77,90
DB133-08-01.350A1-WJ30ER	WJ30ER	1	●	D31	7577882	138,00
DB133-08-01.400A0-WJ30ER	WJ30ER	1	●	D31	6712916	77,90
DB133-08-01.400A1-WJ30ER	WJ30ER	1	●	D31	7577883	138,00
DB133-08-01.450A0-WJ30ER	WJ30ER	1	●	D31	6712917	77,90
DB133-08-01.450A1-WJ30ER	WJ30ER	1	●	D31	7577884	138,00
DB133-08-01.500A0-WJ30ER	WJ30ER	1	●	D31	6712918	77,90
DB133-08-01.500A1-WJ30ER	WJ30ER	1	●	D31	7577885	138,00
DB133-08-01.550A0-WJ30ER	WJ30ER	1	●	D31	6712919	77,90
DB133-08-01.550A1-WJ30ER	WJ30ER	1	●	D31	7577886	138,00
DB133-08-01.588A0-WJ30ER	WJ30ER	1	●	D31	6712920	77,90
DB133-08-01.588A1-WJ30ER	WJ30ER	1	●	D31	7577887	138,00
DB133-08-01.600A0-WJ30ER	WJ30ER	1	●	D31	6712921	77,90
DB133-08-01.600A1-WJ30ER	WJ30ER	1	●	D31	7577888	138,00
DB133-08-01.650A0-WJ30ER	WJ30ER	1	●	D31	6712922	77,90
DB133-08-01.650A1-WJ30ER	WJ30ER	1	●	D31	7577889	138,00
DB133-08-01.700A0-WJ30ER	WJ30ER	1	●	D31	6712923	77,90
DB133-08-01.700A1-WJ30ER	WJ30ER	1	●	D31	7577890	138,00
DB133-08-01.750A0-WJ30ER	WJ30ER	1	●	D31	6712924	77,90
DB133-08-01.750A1-WJ30ER	WJ30ER	1	●	D31	7577891	138,00
DB133-08-01.800A0-WJ30ER	WJ30ER	1	●	D31	6712925	77,90
DB133-08-01.800A1-WJ30ER	WJ30ER	1	●	D31	7577892	138,00
DB133-08-01.820A0-WJ30ER	WJ30ER	1	●	D31	6712926	77,90
DB133-08-01.820A1-WJ30ER	WJ30ER	1	●	D31	7577893	138,00
DB133-08-01.850A0-WJ30ER	WJ30ER	1	●	D31	6712927	77,90
DB133-08-01.850A1-WJ30ER	WJ30ER	1	●	D31	7577894	138,00
DB133-08-01.900A0-WJ30ER	WJ30ER	1	●	D31	6712928	77,90
DB133-08-01.900A1-WJ30ER	WJ30ER	1	●	D31	7577895	138,00
DB133-08-01.950A0-WJ30ER	WJ30ER	1	●	D31	6712929	77,90
DB133-08-01.950A1-WJ30ER	WJ30ER	1	●	D31	7577896	138,00
DB133-08-01.984A0-WJ30ER	WJ30ER	1	●	D31	6712930	77,90
DB133-08-01.984A1-WJ30ER	WJ30ER	1	●	D31	7577897	138,00
DB133-08-02.000A0-WJ30ER	WJ30ER	1	●	D31	6712931	77,90
DB133-08-02.000A1-WJ30ER	WJ30ER	1	●	D31	8184755	133,00
DB133-08-02.050A0-WJ30ER	WJ30ER	1	●	D31	6712932	90,40
DB133-08-02.050A1-WJ30ER	WJ30ER	1	●	D31	8184756	155,00
DB133-08-02.100A0-WJ30ER	WJ30ER	1	●	D31	6712933	90,40

Bezeichnung / Designation	Sorte / Grade	VE / US		Disc. Gr.	Article No.	EURO Stück / piece
DB133-08-02.100A1-WJ30ER	WJ30ER	1	●	D31	8184757	155,00
DB133-08-02.150A0-WJ30ER	WJ30ER	1	●	D31	6712934	90,40
DB133-08-02.150A1-WJ30ER	WJ30ER	1	●	D31	8184758	155,00
DB133-08-02.200A0-WJ30ER	WJ30ER	1	●	D31	6712935	90,40
DB133-08-02.200A1-WJ30ER	WJ30ER	1	●	D31	8184759	155,00
DB133-08-02.250A0-WJ30ER	WJ30ER	1	●	D31	6712936	90,40
DB133-08-02.250A1-WJ30ER	WJ30ER	1	●	D31	8184760	155,00
DB133-08-02.300A0-WJ30ER	WJ30ER	1	●	D31	6712937	90,40
DB133-08-02.300A1-WJ30ER	WJ30ER	1	●	D31	8184761	155,00
DB133-08-02.350A0-WJ30ER	WJ30ER	1	●	D31	6712938	90,40
DB133-08-02.350A1-WJ30ER	WJ30ER	1	●	D31	8184762	155,00
DB133-08-02.381A0-WJ30ER	WJ30ER	1	●	D31	6712939	90,40
DB133-08-02.381A1-WJ30ER	WJ30ER	1	●	D31	8184763	155,00
DB133-08-02.400A0-WJ30ER	WJ30ER	1	●	D31	6712940	90,40
DB133-08-02.400A1-WJ30ER	WJ30ER	1	●	D31	8184764	155,00
DB133-08-02.450A0-WJ30ER	WJ30ER	1	●	D31	6712941	90,40
DB133-08-02.450A1-WJ30ER	WJ30ER	1	●	D31	8184765	155,00
DB133-08-02.500A0-WJ30ER	WJ30ER	1	●	D31	6712942	90,40
DB133-08-02.500A1-WJ30ER	WJ30ER	1	●	D31	8184766	155,00
DB133-08-02.550A0-WJ30ER	WJ30ER	1	●	D31	6712943	90,40
DB133-08-02.550A1-WJ30ER	WJ30ER	1	●	D31	8184767	155,00
DB133-08-02.600A0-WJ30ER	WJ30ER	1	●	D31	6712944	90,40
DB133-08-02.600A1-WJ30ER	WJ30ER	1	●	D31	8184768	155,00
DB133-08-02.650A0-WJ30ER	WJ30ER	1	●	D31	6712945	90,40
DB133-08-02.650A1-WJ30ER	WJ30ER	1	●	D31	8184769	155,00
DB133-08-02.700A0-WJ30ER	WJ30ER	1	●	D31	6712946	90,40
DB133-08-02.700A1-WJ30ER	WJ30ER	1	●	D31	8184770	155,00
DB133-08-02.750A0-WJ30ER	WJ30ER	1	●	D31	6712947	90,40
DB133-08-02.750A1-WJ30ER	WJ30ER	1	●	D31	8184771	155,00
DB133-08-02.778A0-WJ30ER	WJ30ER	1	●	D31	6712948	90,40
DB133-08-02.778A1-WJ30ER	WJ30ER	1	●	D31	8184772	155,00
DB133-08-02.800A0-WJ30ER	WJ30ER	1	●	D31	6712949	90,40
DB133-08-02.800A1-WJ30ER	WJ30ER	1	●	D31	8184773	155,00
DB133-08-02.850A0-WJ30ER	WJ30ER	1	●	D31	6712950	90,40
DB133-08-02.850A1-WJ30ER	WJ30ER	1	●	D31	8184774	155,00
DB133-08-02.900A0-WJ30ER	WJ30ER	1	●	D31	6712951	90,40
DB133-08-02.900A1-WJ30ER	WJ30ER	1	●	D31	8184775	155,00
DB133-08-02.950A0-WJ30ER	WJ30ER	1	●	D31	6712952	90,40
DB133-08-02.950A1-WJ30ER	WJ30ER	1	●	D31	8184776	155,00
DB133-12-00.700A1-WJ30ER	WJ30ER	1	●	D31	7577898	160,00
DB133-12-00.750A1-WJ30ER	WJ30ER	1	●	D31	7577899	160,00
DB133-12-00.794A1-WJ30ER	WJ30ER	1	●	D31	7577900	160,00
DB133-12-00.800A1-WJ30ER	WJ30ER	1	●	D31	7577901	160,00
DB133-12-00.850A1-WJ30ER	WJ30ER	1	●	D31	7577902	160,00
DB133-12-00.900A1-WJ30ER	WJ30ER	1	●	D31	7577903	160,00
DB133-12-00.950A1-WJ30ER	WJ30ER	1	●	D31	7577904	160,00
DB133-12-01.000A1-WJ30ER	WJ30ER	1	●	D31	7577905	160,00
DB133-12-01.050A1-WJ30ER	WJ30ER	1	●	D31	7577906	160,00
DB133-12-01.100A1-WJ30ER	WJ30ER	1	●	D31	7577907	160,00
DB133-12-01.150A1-WJ30ER	WJ30ER	1	●	D31	7577908	160,00
DB133-12-01.191A1-WJ30ER	WJ30ER	1	●	D31	7577909	160,00
DB133-12-01.200A1-WJ30ER	WJ30ER	1	●	D31	7577910	160,00
DB133-12-01.250A1-WJ30ER	WJ30ER	1	●	D31	7577911	160,00
DB133-12-01.300A1-WJ30ER	WJ30ER	1	●	D31	7577912	160,00
DB133-12-01.350A1-WJ30ER	WJ30ER	1	●	D31	7577913	160,00
DB133-12-01.400A1-WJ30ER	WJ30ER	1	●	D31	7577914	160,00
DB133-12-01.450A1-WJ30ER	WJ30ER	1	●	D31	7577915	160,00
DB133-12-01.500A1-WJ30ER	WJ30ER	1	●	D31	7577916	160,00
DB133-12-01.550A1-WJ30ER	WJ30ER	1	●	D31	7577917	160,00
DB133-12-01.588A1-WJ30ER	WJ30ER	1	●	D31	7577918	160,00
DB133-12-01.600A1-WJ30ER	WJ30ER	1	●	D31	7577919	160,00
DB133-12-01.650A1-WJ30ER	WJ30ER	1	●	D31	7577920	160,00
DB133-12-01.700A1-WJ30ER	WJ30ER	1	●	D31	7577921	160,00
DB133-12-01.750A1-WJ30ER	WJ30ER	1	●	D31	7577922	160,00
DB133-12-01.800A1-WJ30ER	WJ30ER	1	●	D31	7577923	160,00
DB133-12-01.850A1-WJ30ER	WJ30ER	1	●	D31	7577924	160,00
DB133-12-01.900A1-WJ30ER	WJ30ER	1	●	D31	7577925	160,00
DB133-12-01.950A1-WJ30ER	WJ30ER	1	●	D31	7577926	160,00
DB133-12-01.984A1-WJ30ER	WJ30ER	1	●	D31	7577927	160,00
DB133-12-02.000A1-WJ30ER	WJ30ER	1	●	D31	8184777	154,00

Bezeichnung / Designation	Sorte / Grade	VE / US		Disc. Gr.	Article No.	EURO Stück / piece
DB133-12-02.100A1-WJ30ER	WJ30ER	1	●	D31	8184778	178,00
DB133-12-02.200A1-WJ30ER	WJ30ER	1	●	D31	8184779	178,00
DB133-12-02.300A1-WJ30ER	WJ30ER	1	●	D31	8184780	178,00
DB133-12-02.381A1-WJ30ER	WJ30ER	1	●	D31	8184781	178,00
DB133-12-02.400A1-WJ30ER	WJ30ER	1	●	D31	8184782	178,00
DB133-12-02.500A1-WJ30ER	WJ30ER	1	●	D31	8184783	178,00
DB133-12-02.600A1-WJ30ER	WJ30ER	1	●	D31	8184784	178,00
DB133-12-02.700A1-WJ30ER	WJ30ER	1	●	D31	8184785	178,00
DB133-12-02.778A1-WJ30ER	WJ30ER	1	●	D31	8184786	178,00
DB133-12-02.800A1-WJ30ER	WJ30ER	1	●	D31	8184787	178,00
DB133-12-02.900A1-WJ30ER	WJ30ER	1	●	D31	8184788	178,00
DB133-16-02.000A1-WJ30ER	WJ30ER	1	●	D32	8184789	172,00
DB133-16-02.100A1-WJ30ER	WJ30ER	1	●	D32	8184790	200,00
DB133-16-02.200A1-WJ30ER	WJ30ER	1	●	D32	8184791	200,00
DB133-16-02.300A1-WJ30ER	WJ30ER	1	●	D32	8184792	200,00
DB133-16-02.381A1-WJ30ER	WJ30ER	1	●	D32	8184793	200,00
DB133-16-02.400A1-WJ30ER	WJ30ER	1	●	D32	8184794	200,00
DB133-16-02.500A1-WJ30ER	WJ30ER	1	●	D32	8184795	200,00
DB133-16-02.600A1-WJ30ER	WJ30ER	1	●	D32	8184796	200,00
DB133-16-02.700A1-WJ30ER	WJ30ER	1	●	D32	8184797	200,00
DB133-16-02.778A1-WJ30ER	WJ30ER	1	●	D32	8184798	200,00
DB133-16-02.800A1-WJ30ER	WJ30ER	1	●	D32	8184799	200,00
DB133-16-02.900A1-WJ30ER	WJ30ER	1	●	D32	8184810	200,00
DB133-20-02.000A1-WJ30ER	WJ30ER	1	●	D32	8184811	204,00
DB133-20-02.100A1-WJ30ER	WJ30ER	1	●	D32	8184812	236,00
DB133-20-02.200A1-WJ30ER	WJ30ER	1	●	D32	8184813	236,00
DB133-20-02.300A1-WJ30ER	WJ30ER	1	●	D32	8184814	236,00
DB133-20-02.381A1-WJ30ER	WJ30ER	1	●	D32	8184815	236,00
DB133-20-02.400A1-WJ30ER	WJ30ER	1	●	D32	8184816	236,00
DB133-20-02.500A1-WJ30ER	WJ30ER	1	●	D32	8184817	236,00
DB133-20-02.600A1-WJ30ER	WJ30ER	1	●	D32	8184818	236,00
DB133-20-02.700A1-WJ30ER	WJ30ER	1	●	D32	8184819	236,00
DB133-20-02.778A1-WJ30ER	WJ30ER	1	●	D32	8184820	236,00
DB133-20-02.800A1-WJ30ER	WJ30ER	1	●	D32	8184821	236,00
DB133-20-02.900A1-WJ30ER	WJ30ER	1	●	D32	8184822	236,00
DB133-25-02.000A1-WJ30ER	WJ30ER	1	●	D32	8184823	246,00
DB133-25-02.100A1-WJ30ER	WJ30ER	1	●	D32	8184824	286,00
DB133-25-02.200A1-WJ30ER	WJ30ER	1	●	D32	8184825	286,00
DB133-25-02.300A1-WJ30ER	WJ30ER	1	●	D32	8184826	286,00
DB133-25-02.381A1-WJ30ER	WJ30ER	1	●	D32	8184827	286,00
DB133-25-02.400A1-WJ30ER	WJ30ER	1	●	D32	8184828	286,00
DB133-25-02.500A1-WJ30ER	WJ30ER	1	●	D32	8184829	286,00
DB133-25-02.600A1-WJ30ER	WJ30ER	1	●	D32	8184830	286,00
DB133-25-02.700A1-WJ30ER	WJ30ER	1	●	D32	8184831	286,00
DB133-25-02.778A1-WJ30ER	WJ30ER	1	●	D32	8184832	286,00
DB133-25-02.800A1-WJ30ER	WJ30ER	1	●	D32	8184833	286,00
DB133-25-02.900A1-WJ30ER	WJ30ER	1	●	D32	8184834	286,00
DB133-30-02.000A1-WJ30ER	WJ30ER	1	●	D32	8184835	290,00
DB133-30-02.100A1-WJ30ER	WJ30ER	1	●	D32	8184836	337,00
DB133-30-02.200A1-WJ30ER	WJ30ER	1	●	D32	8184837	337,00
DB133-30-02.300A1-WJ30ER	WJ30ER	1	●	D32	8184838	337,00
DB133-30-02.381A1-WJ30ER	WJ30ER	1	●	D32	8184839	337,00
DB133-30-02.400A1-WJ30ER	WJ30ER	1	●	D32	8184840	337,00
DB133-30-02.500A1-WJ30ER	WJ30ER	1	●	D32	8184841	337,00
DB133-30-02.600A1-WJ30ER	WJ30ER	1	●	D32	8184842	337,00
DB133-30-02.700A1-WJ30ER	WJ30ER	1	●	D32	8184843	337,00
DB133-30-02.778A1-WJ30ER	WJ30ER	1	●	D32	8184844	337,00
DB133-30-02.800A1-WJ30ER	WJ30ER	1	●	D32	8184845	337,00
DB133-30-02.900A1-WJ30ER	WJ30ER	1	●	D32	8184846	337,00
DC118-02-03.000A1-WJ30ET	WJ30ET	1	●	D30	8221561	116,00
DC118-02-03.175A1-WJ30ET	WJ30ET	1	●	D30	8221562	116,00
DC118-02-03.300A1-WJ30ET	WJ30ET	1	●	D30	8221563	116,00
DC118-02-03.500A1-WJ30ET	WJ30ET	1	●	D30	8221564	116,00
DC118-02-03.572A1-WJ30ET	WJ30ET	1	●	D30	8221565	116,00
DC118-02-03.969A1-WJ30ET	WJ30ET	1	●	D30	8221566	116,00
DC118-02-04.000A1-WJ30ET	WJ30ET	1	●	D30	8221567	116,00
DC118-02-04.200A1-WJ30ET	WJ30ET	1	●	D30	8221568	116,00
DC118-02-04.500A1-WJ30ET	WJ30ET	1	●	D30	8221569	116,00
DC118-02-04.763A1-WJ30ET	WJ30ET	1	●	D30	8221620	116,00
DC118-02-04.800A1-WJ30ET	WJ30ET	1	●	D30	8221621	116,00

Bezeichnung / Designation	Sorte / Grade	VE / US		Disc. Gr.	Article No.	EURO Stück / piece
DC118-02-05.000A1-WJ30ET	WJ30ET	1	●	D30	8221622	116,00
DC118-02-05.500A1-WJ30ET	WJ30ET	1	●	D30	8221623	116,00
DC118-02-05.556A1-WJ30ET	WJ30ET	1	●	D30	8221624	116,00
DC118-02-05.800A1-WJ30ET	WJ30ET	1	●	D30	8221625	116,00
DC118-02-06.000A1-WJ30ET	WJ30ET	1	●	D30	8221626	116,00
DC118-02-06.100A1-WJ30ET	WJ30ET	1	●	D30	8221627	139,00
DC118-02-06.350A1-WJ30ET	WJ30ET	1	●	D30	8221628	139,00
DC118-02-06.500A1-WJ30ET	WJ30ET	1	●	D30	8221629	139,00
DC118-02-06.800A1-WJ30ET	WJ30ET	1	●	D30	8221630	139,00
DC118-02-07.000A1-WJ30ET	WJ30ET	1	●	D30	8221631	139,00
DC118-02-07.144A1-WJ30ET	WJ30ET	1	●	D30	8221632	139,00
DC118-02-07.400A1-WJ30ET	WJ30ET	1	●	D30	8221633	139,00
DC118-02-07.500A1-WJ30ET	WJ30ET	1	●	D30	8221634	139,00
DC118-02-07.938A1-WJ30ET	WJ30ET	1	●	D30	8221635	139,00
DC118-02-08.000A1-WJ30ET	WJ30ET	1	●	D30	8221636	139,00
DC118-02-08.300A1-WJ30ET	WJ30ET	1	●	D30	8221637	163,00
DC118-02-08.500A1-WJ30ET	WJ30ET	1	●	D30	8221638	163,00
DC118-02-08.731A1-WJ30ET	WJ30ET	1	●	D30	8221639	163,00
DC118-02-09.000A1-WJ30ET	WJ30ET	1	●	D30	8221640	163,00
DC118-02-09.525A1-WJ30ET	WJ30ET	1	●	D30	8221641	163,00
DC118-02-09.800A1-WJ30ET	WJ30ET	1	●	D30	8221642	163,00
DC118-02-10.000A1-WJ30ET	WJ30ET	1	●	D30	8221643	163,00
DC118-02-10.200A1-WJ30ET	WJ30ET	1	●	D30	8221644	221,00
DC118-02-10.319A1-WJ30ET	WJ30ET	1	●	D30	8221645	221,00
DC118-02-10.500A1-WJ30ET	WJ30ET	1	●	D30	8221646	221,00
DC118-02-11.000A1-WJ30ET	WJ30ET	1	●	D30	8221647	221,00
DC118-02-11.113A1-WJ30ET	WJ30ET	1	●	D30	8221648	221,00
DC118-02-11.500A1-WJ30ET	WJ30ET	1	●	D30	8221649	221,00
DC118-02-11.800A1-WJ30ET	WJ30ET	1	●	D30	8221650	221,00
DC118-02-11.906A1-WJ30ET	WJ30ET	1	●	D30	8221651	221,00
DC118-02-12.000A1-WJ30ET	WJ30ET	1	●	D30	8221652	221,00
DC118-02-12.500A1-WJ30ET	WJ30ET	1	●	D30	8221653	302,00
DC118-02-12.700A1-WJ30ET	WJ30ET	1	●	D30	8221654	302,00
DC118-02-13.000A1-WJ30ET	WJ30ET	1	●	D30	8221655	302,00
DC118-02-13.500A1-WJ30ET	WJ30ET	1	●	D30	8221656	302,00
DC118-02-14.000A1-WJ30ET	WJ30ET	1	●	D30	8221657	302,00
DC118-02-14.288A1-WJ30ET	WJ30ET	1	●	D30	8221658	395,00
DC118-02-14.500A1-WJ30ET	WJ30ET	1	●	D30	8221659	395,00
DC118-02-15.000A1-WJ30ET	WJ30ET	1	●	D30	8221660	395,00
DC118-02-16.000A1-WJ30ET	WJ30ET	1	●	D30	8221661	395,00
DC118-02-17.000A1-WJ30ET	WJ30ET	1	●	D30	8221662	499,00
DC118-02-17.500A1-WJ30ET	WJ30ET	1	●	D30	8221663	499,00
DC118-02-18.000A1-WJ30ET	WJ30ET	1	●	D30	8221664	499,00
DC118-02-19.000A1-WJ30ET	WJ30ET	1	●	D30	8221665	604,00
DC118-02-20.000A1-WJ30ET	WJ30ET	1	●	D30	8221666	604,00
DC150-03-01.500U0-WJ30RE	WJ30RE	1	●	D10	7781104	31,90
DC150-03-01.588U0-WJ30RE	WJ30RE	1	●	D10	7781105	31,90
DC150-03-01.600U0-WJ30RE	WJ30RE	1	●	D10	7781106	31,90
DC150-03-01.700U0-WJ30RE	WJ30RE	1	●	D10	7781107	31,90
DC150-03-01.800U0-WJ30RE	WJ30RE	1	●	D10	7781108	31,90
DC150-03-01.820U0-WJ30RE	WJ30RE	1	●	D10	7781109	31,90
DC150-03-01.900U0-WJ30RE	WJ30RE	1	●	D10	7781150	31,90
DC150-03-01.984U0-WJ30RE	WJ30RE	1	●	D10	7781151	31,90
DC150-03-02.000U0-WJ30RE	WJ30RE	1	●	D10	7781152	31,90
DC150-03-02.050U0-WJ30RE	WJ30RE	1	●	D10	7781153	38,60
DC150-03-02.100U0-WJ30RE	WJ30RE	1	●	D10	7781154	38,60
DC150-03-02.200U0-WJ30RE	WJ30RE	1	●	D10	7781155	38,60
DC150-03-02.300U0-WJ30RE	WJ30RE	1	●	D10	7781156	38,60
DC150-03-02.381U0-WJ30RE	WJ30RE	1	●	D10	7781157	38,60
DC150-03-02.400U0-WJ30RE	WJ30RE	1	●	D10	7781158	38,60
DC150-03-02.500U0-WJ30RE	WJ30RE	1	●	D10	7781159	38,60
DC150-03-02.600U0-WJ30RE	WJ30RE	1	●	D10	7781160	38,60
DC150-03-02.700U0-WJ30RE	WJ30RE	1	●	D10	7781161	38,60
DC150-03-02.778U0-WJ30RE	WJ30RE	1	●	D10	7781162	38,60
DC150-03-02.800U0-WJ30RE	WJ30RE	1	●	D10	7781163	38,60
DC150-03-02.900U0-WJ30RE	WJ30RE	1	●	D10	7781164	38,60
DC150-03-03.000A0-WJ30RE	WJ30RE	1	●	D10	6617227	45,50
DC150-03-03.000A1-WJ30RE	WJ30RE	1	●	D10	6968709	54,60
DC150-03-03.000D0-WJ30RE	WJ30RE	1	●	D10	7287626	46,80
DC150-03-03.000D1-WJ30RE	WJ30RE	1	●	D10	7287717	56,20

Bezeichnung / Designation	Sorte / Grade	VE / US		Disc. Gr.	Article No.	EURO Stück / piece
DC150-03-03.100A0-WJ30RE	WJ30RE	1	●	D10	6617228	45,50
DC150-03-03.100A1-WJ30RE	WJ30RE	1	●	D10	6968730	54,60
DC150-03-03.100D0-WJ30RE	WJ30RE	1	●	D10	7287627	46,80
DC150-03-03.175A0-WJ30RE	WJ30RE	1	●	D10	6617229	45,50
DC150-03-03.175A1-WJ30RE	WJ30RE	1	●	D10	6968731	54,60
DC150-03-03.200A0-WJ30RE	WJ30RE	1	●	D10	6618060	45,50
DC150-03-03.200A1-WJ30RE	WJ30RE	1	●	D10	6968732	54,60
DC150-03-03.200D0-WJ30RE	WJ30RE	1	●	D10	7287628	46,80
DC150-03-03.250A0-WJ30RE	WJ30RE	1	●	D10	6618061	45,50
DC150-03-03.250A1-WJ30RE	WJ30RE	1	●	D10	6968733	54,60
DC150-03-03.300A0-WJ30RE	WJ30RE	1	●	D10	6618062	45,50
DC150-03-03.300A1-WJ30RE	WJ30RE	1	●	D10	6968734	54,60
DC150-03-03.300D0-WJ30RE	WJ30RE	1	●	D10	7287629	46,80
DC150-03-03.300D1-WJ30RE	WJ30RE	1	●	D10	7287718	56,20
DC150-03-03.400A0-WJ30RE	WJ30RE	1	●	D10	6618063	45,50
DC150-03-03.400A1-WJ30RE	WJ30RE	1	●	D10	6968735	54,60
DC150-03-03.400D0-WJ30RE	WJ30RE	1	●	D10	7287630	46,80
DC150-03-03.400D1-WJ30RE	WJ30RE	1	●	D10	7287719	56,20
DC150-03-03.500A0-WJ30RE	WJ30RE	1	●	D10	6618064	45,50
DC150-03-03.500A1-WJ30RE	WJ30RE	1	●	D10	6968736	54,60
DC150-03-03.500D0-WJ30RE	WJ30RE	1	●	D10	7287631	46,80
DC150-03-03.500D1-WJ30RE	WJ30RE	1	●	D10	7287720	56,20
DC150-03-03.572A0-WJ30RE	WJ30RE	1	●	D10	6618065	45,50
DC150-03-03.572A1-WJ30RE	WJ30RE	1	●	D10	6968737	54,60
DC150-03-03.600A0-WJ30RE	WJ30RE	1	●	D10	6618066	45,50
DC150-03-03.600A1-WJ30RE	WJ30RE	1	●	D10	6968738	54,60
DC150-03-03.600D0-WJ30RE	WJ30RE	1	●	D10	7287632	46,80
DC150-03-03.650A1-WJ30RE	WJ30RE	1	●	D10	6968739	54,60
DC150-03-03.700A0-WJ30RE	WJ30RE	1	●	D10	6618067	45,50
DC150-03-03.700A1-WJ30RE	WJ30RE	1	●	D10	6968740	54,60
DC150-03-03.700D0-WJ30RE	WJ30RE	1	●	D10	7287633	46,80
DC150-03-03.700D1-WJ30RE	WJ30RE	1	●	D10	7287721	56,20
DC150-03-03.800A0-WJ30RE	WJ30RE	1	●	D10	6618068	45,50
DC150-03-03.800A1-WJ30RE	WJ30RE	1	●	D10	6968741	54,60
DC150-03-03.800D0-WJ30RE	WJ30RE	1	●	D10	7287634	46,80
DC150-03-03.800D1-WJ30RE	WJ30RE	1	●	D10	7287722	56,20
DC150-03-03.900A0-WJ30RE	WJ30RE	1	●	D10	6618069	45,50
DC150-03-03.900A1-WJ30RE	WJ30RE	1	●	D10	6968742	54,60
DC150-03-03.900D0-WJ30RE	WJ30RE	1	●	D10	7287635	46,80
DC150-03-03.969A0-WJ30RE	WJ30RE	1	●	D10	6618070	45,50
DC150-03-03.969A1-WJ30RE	WJ30RE	1	●	D10	6968743	54,60
DC150-03-04.000A0-WJ30RE	WJ30RE	1	●	D10	6618071	45,50
DC150-03-04.000A1-WJ30RE	WJ30RE	1	●	D10	6968744	54,60
DC150-03-04.000D0-WJ30RE	WJ30RE	1	●	D10	7287636	46,80
DC150-03-04.000D1-WJ30RE	WJ30RE	1	●	D10	7287723	56,20
DC150-03-04.100A0-WJ30RE	WJ30RE	1	●	D10	6618072	45,50
DC150-03-04.100A1-WJ30RE	WJ30RE	1	●	D10	6968745	54,60
DC150-03-04.200A0-WJ30RE	WJ30RE	1	●	D10	6618073	45,50
DC150-03-04.200A1-WJ30RE	WJ30RE	1	●	D10	6968746	54,60
DC150-03-04.200D0-WJ30RE	WJ30RE	1	●	D10	7287637	46,80
DC150-03-04.200D1-WJ30RE	WJ30RE	1	●	D10	7287724	56,20
DC150-03-04.300A0-WJ30RE	WJ30RE	1	●	D10	6618074	45,50
DC150-03-04.300A1-WJ30RE	WJ30RE	1	●	D10	6968747	54,60
DC150-03-04.300D0-WJ30RE	WJ30RE	1	●	D10	7287638	46,80
DC150-03-04.300D1-WJ30RE	WJ30RE	1	●	D10	7287725	56,20
DC150-03-04.366A0-WJ30RE	WJ30RE	1	●	D10	6618075	45,50
DC150-03-04.366A1-WJ30RE	WJ30RE	1	●	D10	6968748	54,60
DC150-03-04.400A0-WJ30RE	WJ30RE	1	●	D10	6618076	45,50
DC150-03-04.400A1-WJ30RE	WJ30RE	1	●	D10	6968749	54,60
DC150-03-04.500A0-WJ30RE	WJ30RE	1	●	D10	6618077	45,50
DC150-03-04.500A1-WJ30RE	WJ30RE	1	●	D10	6968750	54,60
DC150-03-04.500D0-WJ30RE	WJ30RE	1	●	D10	7287639	46,80
DC150-03-04.500D1-WJ30RE	WJ30RE	1	●	D10	7287726	56,20
DC150-03-04.600A0-WJ30RE	WJ30RE	1	●	D10	6618078	45,50
DC150-03-04.600A1-WJ30RE	WJ30RE	1	●	D10	6968751	54,60
DC150-03-04.650A0-WJ30RE	WJ30RE	1	●	D10	6618079	45,50
DC150-03-04.650A1-WJ30RE	WJ30RE	1	●	D10	6968752	54,60
DC150-03-04.650D0-WJ30RE	WJ30RE	1	●	D10	7287640	46,80
DC150-03-04.700A0-WJ30RE	WJ30RE	1	●	D10	6618080	45,50
DC150-03-04.700A1-WJ30RE	WJ30RE	1	●	D10	6968753	54,60

Bezeichnung / Designation	Sorte / Grade	VE / US		Disc. Gr.	Article No.	EURO Stück / piece
DC150-03-04.700D0-WJ30RE	WJ30RE	1	●	D10	7287641	46,80
DC150-03-04.763A0-WJ30RE	WJ30RE	1	●	D10	6618081	45,50
DC150-03-04.763A1-WJ30RE	WJ30RE	1	●	D10	6968754	54,60
DC150-03-04.800A0-WJ30RE	WJ30RE	1	●	D10	6618082	45,50
DC150-03-04.800A1-WJ30RE	WJ30RE	1	●	D10	6968755	54,60
DC150-03-04.800D0-WJ30RE	WJ30RE	1	●	D10	7287642	46,80
DC150-03-04.800D1-WJ30RE	WJ30RE	1	●	D10	7287727	56,20
DC150-03-04.900A0-WJ30RE	WJ30RE	1	●	D10	6618083	45,50
DC150-03-04.900A1-WJ30RE	WJ30RE	1	●	D10	6968756	54,60
DC150-03-05.000A0-WJ30RE	WJ30RE	1	●	D10	6618084	45,50
DC150-03-05.000A1-WJ30RE	WJ30RE	1	●	D10	6968757	54,60
DC150-03-05.000D0-WJ30RE	WJ30RE	1	●	D10	7287643	46,80
DC150-03-05.000D1-WJ30RE	WJ30RE	1	●	D10	7287728	56,20
DC150-03-05.100A0-WJ30RE	WJ30RE	1	●	D10	6618085	45,50
DC150-03-05.100A1-WJ30RE	WJ30RE	1	●	D10	6968758	54,60
DC150-03-05.100D0-WJ30RE	WJ30RE	1	●	D10	7287644	46,80
DC150-03-05.100D1-WJ30RE	WJ30RE	1	●	D10	7287729	56,20
DC150-03-05.159A0-WJ30RE	WJ30RE	1	●	D10	6618086	45,50
DC150-03-05.159A1-WJ30RE	WJ30RE	1	●	D10	6968759	54,60
DC150-03-05.200A0-WJ30RE	WJ30RE	1	●	D10	6618087	45,50
DC150-03-05.200A1-WJ30RE	WJ30RE	1	●	D10	6968760	54,60
DC150-03-05.300A0-WJ30RE	WJ30RE	1	●	D10	6618088	45,50
DC150-03-05.300A1-WJ30RE	WJ30RE	1	●	D10	6968761	54,60
DC150-03-05.300D0-WJ30RE	WJ30RE	1	○	D10	7287645*	46,80
DC150-03-05.300D1-WJ30RE	WJ30RE	1	●	D10	7287730	56,20
DC150-03-05.400A0-WJ30RE	WJ30RE	1	●	D10	6618089	45,50
DC150-03-05.400A1-WJ30RE	WJ30RE	1	●	D10	6968762	54,60
DC150-03-05.500A0-WJ30RE	WJ30RE	1	●	D10	6618090	45,50
DC150-03-05.500A1-WJ30RE	WJ30RE	1	●	D10	6968763	54,60
DC150-03-05.500D0-WJ30RE	WJ30RE	1	●	D10	7287646	46,80
DC150-03-05.500D1-WJ30RE	WJ30RE	1	●	D10	7287731	56,20
DC150-03-05.550A0-WJ30RE	WJ30RE	1	●	D10	6618091	45,50
DC150-03-05.550A1-WJ30RE	WJ30RE	1	●	D10	6968764	54,60
DC150-03-05.550D0-WJ30RE	WJ30RE	1	●	D10	7287647	46,80
DC150-03-05.556A0-WJ30RE	WJ30RE	1	●	D10	6618092	45,50
DC150-03-05.556A1-WJ30RE	WJ30RE	1	●	D10	6968765	54,60
DC150-03-05.600A0-WJ30RE	WJ30RE	1	●	D10	6618093	45,50
DC150-03-05.600A1-WJ30RE	WJ30RE	1	●	D10	6968766	54,60
DC150-03-05.600D0-WJ30RE	WJ30RE	1	●	D10	7287648	46,80
DC150-03-05.700A0-WJ30RE	WJ30RE	1	●	D10	6618094	45,50
DC150-03-05.700A1-WJ30RE	WJ30RE	1	●	D10	6968767	54,60
DC150-03-05.800A0-WJ30RE	WJ30RE	1	●	D10	6618095	45,50
DC150-03-05.800A1-WJ30RE	WJ30RE	1	●	D10	6968768	54,60
DC150-03-05.800D0-WJ30RE	WJ30RE	1	●	D10	7287649	46,80
DC150-03-05.900A0-WJ30RE	WJ30RE	1	●	D10	6618096	45,50
DC150-03-05.900A1-WJ30RE	WJ30RE	1	●	D10	6968769	54,60
DC150-03-05.953A0-WJ30RE	WJ30RE	1	●	D10	6618097	45,50
DC150-03-05.953A1-WJ30RE	WJ30RE	1	●	D10	6968770	54,60
DC150-03-06.000A0-WJ30RE	WJ30RE	1	●	D10	6618098	45,50
DC150-03-06.000A1-WJ30RE	WJ30RE	1	●	D10	6968771	54,60
DC150-03-06.000D0-WJ30RE	WJ30RE	1	●	D10	7287650	46,80
DC150-03-06.000D1-WJ30RE	WJ30RE	1	●	D10	7287732	56,20
DC150-03-06.100A0-WJ30RE	WJ30RE	1	●	D10	6618099	54,60
DC150-03-06.100A1-WJ30RE	WJ30RE	1	●	D10	6968772	65,50
DC150-03-06.100D0-WJ30RE	WJ30RE	1	●	D10	7287651	56,20
DC150-03-06.200A0-WJ30RE	WJ30RE	1	●	D10	6618100	54,60
DC150-03-06.200A1-WJ30RE	WJ30RE	1	●	D10	6968773	65,50
DC150-03-06.200D0-WJ30RE	WJ30RE	1	●	D10	7287652	56,20
DC150-03-06.300A0-WJ30RE	WJ30RE	1	●	D10	6618101	54,60
DC150-03-06.300A1-WJ30RE	WJ30RE	1	●	D10	6968774	65,50
DC150-03-06.300D0-WJ30RE	WJ30RE	1	●	D10	7287653	56,20
DC150-03-06.350A0-WJ30RE	WJ30RE	1	●	D10	6618102	54,60
DC150-03-06.350A1-WJ30RE	WJ30RE	1	●	D10	6968775	65,50
DC150-03-06.400A0-WJ30RE	WJ30RE	1	●	D10	6618103	54,60
DC150-03-06.400A1-WJ30RE	WJ30RE	1	●	D10	6968776	65,50
DC150-03-06.500A0-WJ30RE	WJ30RE	1	●	D10	6618104	54,60
DC150-03-06.500A1-WJ30RE	WJ30RE	1	●	D10	6968777	65,50
DC150-03-06.500D0-WJ30RE	WJ30RE	1	●	D10	7287654	56,20
DC150-03-06.500D1-WJ30RE	WJ30RE	1	●	D10	7287733	67,50
DC150-03-06.600A0-WJ30RE	WJ30RE	1	●	D10	6618105	54,60

Bezeichnung / Designation	Sorte / Grade	VE / US		Disc. Gr.	Article No.	EURO Stück / piece
DC150-03-06.600A1-WJ30RE	WJ30RE	1	●	D10	6968778	65,50
DC150-03-06.600D0-WJ30RE	WJ30RE	1	●	D10	7287655	56,20
DC150-03-06.700A0-WJ30RE	WJ30RE	1	●	D10	6618106	54,60
DC150-03-06.700A1-WJ30RE	WJ30RE	1	●	D10	6968779	65,50
DC150-03-06.700D0-WJ30RE	WJ30RE	1	●	D10	7287656	56,20
DC150-03-06.700D1-WJ30RE	WJ30RE	1	●	D10	7287734	67,50
DC150-03-06.747A0-WJ30RE	WJ30RE	1	●	D10	6618107	54,60
DC150-03-06.747A1-WJ30RE	WJ30RE	1	●	D10	6968780	65,50
DC150-03-06.800A0-WJ30RE	WJ30RE	1	●	D10	6618108	54,60
DC150-03-06.800A1-WJ30RE	WJ30RE	1	●	D10	6968781	65,50
DC150-03-06.800D0-WJ30RE	WJ30RE	1	●	D10	7287657	56,20
DC150-03-06.800D1-WJ30RE	WJ30RE	1	●	D10	7287735	67,50
DC150-03-06.900A0-WJ30RE	WJ30RE	1	●	D10	6618109	54,60
DC150-03-06.900A1-WJ30RE	WJ30RE	1	●	D10	6968782	65,50
DC150-03-07.000A0-WJ30RE	WJ30RE	1	●	D10	6618110	54,60
DC150-03-07.000A1-WJ30RE	WJ30RE	1	●	D10	6968783	65,50
DC150-03-07.000D0-WJ30RE	WJ30RE	1	●	D10	7287658	56,20
DC150-03-07.000D1-WJ30RE	WJ30RE	1	●	D10	7287736	67,50
DC150-03-07.100A0-WJ30RE	WJ30RE	1	●	D10	6618111	54,60
DC150-03-07.100A1-WJ30RE	WJ30RE	1	●	D10	6968784	65,50
DC150-03-07.100D0-WJ30RE	WJ30RE	1	●	D10	7287659	56,20
DC150-03-07.144A0-WJ30RE	WJ30RE	1	●	D10	6618112	54,60
DC150-03-07.144A1-WJ30RE	WJ30RE	1	●	D10	6968785	65,50
DC150-03-07.200A0-WJ30RE	WJ30RE	1	●	D10	6618113	54,60
DC150-03-07.200A1-WJ30RE	WJ30RE	1	●	D10	6968786	65,50
DC150-03-07.300A0-WJ30RE	WJ30RE	1	●	D10	6618114	54,60
DC150-03-07.300A1-WJ30RE	WJ30RE	1	●	D10	6968787	65,50
DC150-03-07.400A0-WJ30RE	WJ30RE	1	●	D10	6618115	54,60
DC150-03-07.400A1-WJ30RE	WJ30RE	1	●	D10	6968788	65,50
DC150-03-07.400D0-WJ30RE	WJ30RE	1	●	D10	7287660	56,20
DC150-03-07.500A0-WJ30RE	WJ30RE	1	●	D10	6618116	54,60
DC150-03-07.500A1-WJ30RE	WJ30RE	1	●	D10	6968789	65,50
DC150-03-07.500D0-WJ30RE	WJ30RE	1	○	D10	7287661*	56,20
DC150-03-07.500D1-WJ30RE	WJ30RE	1	●	D10	7287737	67,50
DC150-03-07.541A0-WJ30RE	WJ30RE	1	●	D10	6618117	54,60
DC150-03-07.541A1-WJ30RE	WJ30RE	1	●	D10	6968790	65,50
DC150-03-07.600A0-WJ30RE	WJ30RE	1	●	D10	6618118	54,60
DC150-03-07.600A1-WJ30RE	WJ30RE	1	●	D10	6968791	65,50
DC150-03-07.600D0-WJ30RE	WJ30RE	1	○	D10	7287662*	56,20
DC150-03-07.700A0-WJ30RE	WJ30RE	1	●	D10	6618119	54,60
DC150-03-07.700A1-WJ30RE	WJ30RE	1	●	D10	6968792	65,50
DC150-03-07.800A0-WJ30RE	WJ30RE	1	●	D10	6618120	54,60
DC150-03-07.800A1-WJ30RE	WJ30RE	1	●	D10	6968793	65,50
DC150-03-07.800D0-WJ30RE	WJ30RE	1	●	D10	7287663	56,20
DC150-03-07.800D1-WJ30RE	WJ30RE	1	●	D10	7287738	67,50
DC150-03-07.900A0-WJ30RE	WJ30RE	1	●	D10	6618121	54,60
DC150-03-07.900A1-WJ30RE	WJ30RE	1	●	D10	6968794	65,50
DC150-03-07.938A0-WJ30RE	WJ30RE	1	●	D10	6618122	54,60
DC150-03-07.938A1-WJ30RE	WJ30RE	1	●	D10	6968795	65,50
DC150-03-08.000A0-WJ30RE	WJ30RE	1	●	D10	6618123	54,60
DC150-03-08.000A1-WJ30RE	WJ30RE	1	●	D10	6968796	65,50
DC150-03-08.000D0-WJ30RE	WJ30RE	1	●	D10	7287664	56,20
DC150-03-08.000D1-WJ30RE	WJ30RE	1	●	D10	7287739	67,50
DC150-03-08.100A0-WJ30RE	WJ30RE	1	●	D10	6618124	63,70
DC150-03-08.100A1-WJ30RE	WJ30RE	1	●	D10	6968797	76,50
DC150-03-08.200A0-WJ30RE	WJ30RE	1	●	D10	6618125	63,70
DC150-03-08.200A1-WJ30RE	WJ30RE	1	●	D10	6968798	76,50
DC150-03-08.200D0-WJ30RE	WJ30RE	1	●	D10	7287666	65,60
DC150-03-08.300A0-WJ30RE	WJ30RE	1	●	D10	6618126	63,70
DC150-03-08.300A1-WJ30RE	WJ30RE	1	●	D10	6968799	76,50
DC150-03-08.300D0-WJ30RE	WJ30RE	1	●	D10	7287667	65,60
DC150-03-08.334A0-WJ30RE	WJ30RE	1	●	D10	6618127	63,70
DC150-03-08.334A1-WJ30RE	WJ30RE	1	●	D10	6968800	76,50
DC150-03-08.400A0-WJ30RE	WJ30RE	1	●	D10	6618128	63,70
DC150-03-08.400A1-WJ30RE	WJ30RE	1	●	D10	6968801	76,50
DC150-03-08.500A0-WJ30RE	WJ30RE	1	●	D10	6618129	63,70
DC150-03-08.500A1-WJ30RE	WJ30RE	1	●	D10	6968802	76,50
DC150-03-08.500D0-WJ30RE	WJ30RE	1	●	D10	7287669	65,60
DC150-03-08.500D1-WJ30RE	WJ30RE	1	●	D10	7287740	78,70
DC150-03-08.600A0-WJ30RE	WJ30RE	1	●	D10	6618130	63,70

Bezeichnung / Designation	Sorte / Grade	VE / US		Disc. Gr.	Article No.	EURO Stück / piece
DC150-03-08.600A1-WJ30RE	WJ30RE	1	●	D10	6968803	76,50
DC150-03-08.600D0-WJ30RE	WJ30RE	1	●	D10	7287670	65,60
DC150-03-08.600D1-WJ30RE	WJ30RE	1	●	D10	7287741	78,70
DC150-03-08.700A0-WJ30RE	WJ30RE	1	●	D10	6618131	63,70
DC150-03-08.700A1-WJ30RE	WJ30RE	1	●	D10	6968804	76,50
DC150-03-08.700D0-WJ30RE	WJ30RE	1	○	D10	7287671*	65,60
DC150-03-08.731A0-WJ30RE	WJ30RE	1	●	D10	6618132	63,70
DC150-03-08.731A1-WJ30RE	WJ30RE	1	●	D10	6968805	76,50
DC150-03-08.800A0-WJ30RE	WJ30RE	1	●	D10	6618133	63,70
DC150-03-08.800A1-WJ30RE	WJ30RE	1	●	D10	6968806	76,50
DC150-03-08.800D0-WJ30RE	WJ30RE	1	●	D10	7287672	65,60
DC150-03-08.800D1-WJ30RE	WJ30RE	1	●	D10	7287742	78,70
DC150-03-08.900A0-WJ30RE	WJ30RE	1	●	D10	6618134	63,70
DC150-03-08.900A1-WJ30RE	WJ30RE	1	●	D10	6968807	76,50
DC150-03-09.000A0-WJ30RE	WJ30RE	1	●	D10	6618135	63,70
DC150-03-09.000A1-WJ30RE	WJ30RE	1	●	D10	6968808	76,50
DC150-03-09.000D0-WJ30RE	WJ30RE	1	●	D10	7287673	65,60
DC150-03-09.000D1-WJ30RE	WJ30RE	1	●	D10	7287743	78,70
DC150-03-09.100A0-WJ30RE	WJ30RE	1	●	D10	6618136	63,70
DC150-03-09.100A1-WJ30RE	WJ30RE	1	●	D10	6968809	76,50
DC150-03-09.100D0-WJ30RE	WJ30RE	1	●	D10	7287674	65,60
DC150-03-09.128A1-WJ30RE	WJ30RE	1	●	D10	6968810	76,50
DC150-03-09.200A0-WJ30RE	WJ30RE	1	●	D10	6618137	63,70
DC150-03-09.200A1-WJ30RE	WJ30RE	1	●	D10	6968811	76,50
DC150-03-09.300A0-WJ30RE	WJ30RE	1	●	D10	6618138	63,70
DC150-03-09.300A1-WJ30RE	WJ30RE	1	●	D10	6968812	76,50
DC150-03-09.400A0-WJ30RE	WJ30RE	1	●	D10	6618139	63,70
DC150-03-09.400A1-WJ30RE	WJ30RE	1	●	D10	6968813	76,50
DC150-03-09.500A0-WJ30RE	WJ30RE	1	●	D10	6618140	63,70
DC150-03-09.500A1-WJ30RE	WJ30RE	1	●	D10	6968814	76,50
DC150-03-09.500D0-WJ30RE	WJ30RE	1	●	D10	7287675	65,60
DC150-03-09.525A0-WJ30RE	WJ30RE	1	●	D10	6618141	63,70
DC150-03-09.525A1-WJ30RE	WJ30RE	1	●	D10	6968815	76,50
DC150-03-09.600A0-WJ30RE	WJ30RE	1	●	D10	6618142	63,70
DC150-03-09.600A1-WJ30RE	WJ30RE	1	●	D10	6968816	76,50
DC150-03-09.700A0-WJ30RE	WJ30RE	1	●	D10	6618143	63,70
DC150-03-09.700A1-WJ30RE	WJ30RE	1	●	D10	6968817	76,50
DC150-03-09.700D0-WJ30RE	WJ30RE	1	○	D10	7287676*	65,60
DC150-03-09.800A0-WJ30RE	WJ30RE	1	●	D10	6618144	63,70
DC150-03-09.800A1-WJ30RE	WJ30RE	1	●	D10	6968818	76,50
DC150-03-09.800D0-WJ30RE	WJ30RE	1	●	D10	7287677	65,60
DC150-03-09.900A0-WJ30RE	WJ30RE	1	●	D10	6618145	63,70
DC150-03-09.900A1-WJ30RE	WJ30RE	1	●	D10	6968819	76,50
DC150-03-09.922A0-WJ30RE	WJ30RE	1	●	D10	6618146	63,70
DC150-03-09.922A1-WJ30RE	WJ30RE	1	●	D10	6968820	76,50
DC150-03-10.000A0-WJ30RE	WJ30RE	1	●	D10	6618147	63,70
DC150-03-10.000A1-WJ30RE	WJ30RE	1	●	D10	6968821	76,50
DC150-03-10.000D0-WJ30RE	WJ30RE	1	●	D10	7287678	65,60
DC150-03-10.000D1-WJ30RE	WJ30RE	1	●	D10	7287744	78,70
DC150-03-10.100A0-WJ30RE	WJ30RE	1	●	D10	6618148	86,40
DC150-03-10.100A1-WJ30RE	WJ30RE	1	●	D10	6968822	104,00
DC150-03-10.100D0-WJ30RE	WJ30RE	1	●	D10	7287679	89,00
DC150-03-10.200A0-WJ30RE	WJ30RE	1	●	D10	6618149	86,40
DC150-03-10.200A1-WJ30RE	WJ30RE	1	●	D10	6968823	104,00
DC150-03-10.200D0-WJ30RE	WJ30RE	1	●	D10	7287680	89,00
DC150-03-10.200D1-WJ30RE	WJ30RE	1	●	D10	7287745	107,00
DC150-03-10.300A0-WJ30RE	WJ30RE	1	●	D10	6618150	86,40
DC150-03-10.300A1-WJ30RE	WJ30RE	1	●	D10	6968824	104,00
DC150-03-10.300D0-WJ30RE	WJ30RE	1	●	D10	7287681	89,00
DC150-03-10.300D1-WJ30RE	WJ30RE	1	●	D10	7287746	107,00
DC150-03-10.319A0-WJ30RE	WJ30RE	1	●	D10	6618151	86,40
DC150-03-10.319A1-WJ30RE	WJ30RE	1	●	D10	6968825	104,00
DC150-03-10.400A0-WJ30RE	WJ30RE	1	●	D10	6618152	86,40
DC150-03-10.400A1-WJ30RE	WJ30RE	1	●	D10	6968826	104,00
DC150-03-10.400D0-WJ30RE	WJ30RE	1	●	D10	7287682	89,00
DC150-03-10.500A0-WJ30RE	WJ30RE	1	●	D10	6618153	86,40
DC150-03-10.500A1-WJ30RE	WJ30RE	1	●	D10	6968827	104,00
DC150-03-10.500D0-WJ30RE	WJ30RE	1	●	D10	7287683	89,00
DC150-03-10.500D1-WJ30RE	WJ30RE	1	●	D10	7287747	107,00
DC150-03-10.600A0-WJ30RE	WJ30RE	1	●	D10	6618154	86,40

Bezeichnung / Designation	Sorte / Grade	VE / US		Disc. Gr.	Article No.	EURO Stück / piece
DC150-03-10.600A1-WJ30RE	WJ30RE	1	●	D10	6968828	104,00
DC150-03-10.700A1-WJ30RE	WJ30RE	1	●	D10	6968829	104,00
DC150-03-10.716A0-WJ30RE	WJ30RE	1	●	D10	6618155	86,40
DC150-03-10.716A1-WJ30RE	WJ30RE	1	●	D10	6968830	104,00
DC150-03-10.800A0-WJ30RE	WJ30RE	1	●	D10	6618156	86,40
DC150-03-10.800A1-WJ30RE	WJ30RE	1	●	D10	6968831	104,00
DC150-03-10.800D0-WJ30RE	WJ30RE	1	●	D10	7287685	89,00
DC150-03-10.800D1-WJ30RE	WJ30RE	1	●	D10	7287748	107,00
DC150-03-10.900A1-WJ30RE	WJ30RE	1	●	D10	6968832	104,00
DC150-03-10.900D0-WJ30RE	WJ30RE	1	●	D10	7287686	89,00
DC150-03-11.000A0-WJ30RE	WJ30RE	1	●	D10	6618157	86,40
DC150-03-11.000A1-WJ30RE	WJ30RE	1	●	D10	6968833	104,00
DC150-03-11.000D0-WJ30RE	WJ30RE	1	●	D10	7287687	89,00
DC150-03-11.000D1-WJ30RE	WJ30RE	1	●	D10	7287749	107,00
DC150-03-11.100A0-WJ30RE	WJ30RE	1	●	D10	6618158	86,40
DC150-03-11.100A1-WJ30RE	WJ30RE	1	●	D10	6968834	104,00
DC150-03-11.100D0-WJ30RE	WJ30RE	1	●	D10	7287688	89,00
DC150-03-11.113A0-WJ30RE	WJ30RE	1	●	D10	6618159	86,40
DC150-03-11.113A1-WJ30RE	WJ30RE	1	●	D10	6968835	104,00
DC150-03-11.200A0-WJ30RE	WJ30RE	1	●	D10	6618160	86,40
DC150-03-11.200A1-WJ30RE	WJ30RE	1	●	D10	6968836	104,00
DC150-03-11.200D0-WJ30RE	WJ30RE	1	●	D10	7287689	89,00
DC150-03-11.300A0-WJ30RE	WJ30RE	1	●	D10	6618161	86,40
DC150-03-11.300A1-WJ30RE	WJ30RE	1	●	D10	6968837	104,00
DC150-03-11.300D0-WJ30RE	WJ30RE	1	●	D10	7287690	89,00
DC150-03-11.400A0-WJ30RE	WJ30RE	1	●	D10	6618162	86,40
DC150-03-11.400A1-WJ30RE	WJ30RE	1	●	D10	6968838	104,00
DC150-03-11.500A0-WJ30RE	WJ30RE	1	●	D10	6618163	86,40
DC150-03-11.500A1-WJ30RE	WJ30RE	1	●	D10	6968839	104,00
DC150-03-11.500D0-WJ30RE	WJ30RE	1	●	D10	7287691	89,00
DC150-03-11.509A0-WJ30RE	WJ30RE	1	●	D10	6618164	86,40
DC150-03-11.509A1-WJ30RE	WJ30RE	1	●	D10	6968840	104,00
DC150-03-11.600A1-WJ30RE	WJ30RE	1	●	D10	6968841	104,00
DC150-03-11.600D0-WJ30RE	WJ30RE	1	●	D10	7287692	89,00
DC150-03-11.700A0-WJ30RE	WJ30RE	1	●	D10	6618165	86,40
DC150-03-11.700A1-WJ30RE	WJ30RE	1	●	D10	6968842	104,00
DC150-03-11.800A0-WJ30RE	WJ30RE	1	●	D10	6618166	86,40
DC150-03-11.800A1-WJ30RE	WJ30RE	1	●	D10	6968843	104,00
DC150-03-11.800D0-WJ30RE	WJ30RE	1	●	D10	7287693	89,00
DC150-03-11.800D1-WJ30RE	WJ30RE	1	●	D10	7287750	107,00
DC150-03-11.900A0-WJ30RE	WJ30RE	1	●	D10	6618167	86,40
DC150-03-11.900A1-WJ30RE	WJ30RE	1	●	D10	6968844	104,00
DC150-03-11.906A1-WJ30RE	WJ30RE	1	●	D10	6968845	104,00
DC150-03-12.000A0-WJ30RE	WJ30RE	1	●	D10	6618168	86,40
DC150-03-12.000A1-WJ30RE	WJ30RE	1	●	D10	6968846	104,00
DC150-03-12.000D0-WJ30RE	WJ30RE	1	●	D10	7287694	89,00
DC150-03-12.000D1-WJ30RE	WJ30RE	1	●	D10	7287751	107,00
DC150-03-12.100A0-WJ30RE	WJ30RE	1	●	D10	6618169	118,00
DC150-03-12.100A1-WJ30RE	WJ30RE	1	●	D10	6968847	142,00
DC150-03-12.200A0-WJ30RE	WJ30RE	1	●	D10	6618170	118,00
DC150-03-12.200A1-WJ30RE	WJ30RE	1	●	D10	6968848	142,00
DC150-03-12.200D0-WJ30RE	WJ30RE	1	●	D10	7287695	122,00
DC150-03-12.200D1-WJ30RE	WJ30RE	1	●	D10	7287752	146,00
DC150-03-12.250A0-WJ30RE	WJ30RE	1	●	D10	6618171	118,00
DC150-03-12.300A0-WJ30RE	WJ30RE	1	●	D10	6618172	118,00
DC150-03-12.300A1-WJ30RE	WJ30RE	1	●	D10	6968849	142,00
DC150-03-12.303A0-WJ30RE	WJ30RE	1	●	D10	6618173	118,00
DC150-03-12.303A1-WJ30RE	WJ30RE	1	●	D10	6968850	142,00
DC150-03-12.500A0-WJ30RE	WJ30RE	1	●	D10	6618174	118,00
DC150-03-12.500A1-WJ30RE	WJ30RE	1	●	D10	6968851	142,00
DC150-03-12.500D0-WJ30RE	WJ30RE	1	●	D10	7287697	122,00
DC150-03-12.500D1-WJ30RE	WJ30RE	1	●	D10	7287753	146,00
DC150-03-12.600A1-WJ30RE	WJ30RE	1	●	D10	6968852	142,00
DC150-03-12.700A0-WJ30RE	WJ30RE	1	●	D10	6618175	118,00
DC150-03-12.700A1-WJ30RE	WJ30RE	1	●	D10	6968853	142,00
DC150-03-12.800A0-WJ30RE	WJ30RE	1	●	D10	6618176	118,00
DC150-03-12.800A1-WJ30RE	WJ30RE	1	●	D10	6968854	142,00
DC150-03-12.900A1-WJ30RE	WJ30RE	1	●	D10	6968855	142,00
DC150-03-13.000A0-WJ30RE	WJ30RE	1	●	D10	6618177	118,00
DC150-03-13.000A1-WJ30RE	WJ30RE	1	●	D10	6968856	142,00

Bezeichnung / Designation	Sorte / Grade	VE / US		Disc. Gr.	Article No.	EURO Stück / piece
DC150-03-13.000D0-WJ30RE	WJ30RE	1	●	D10	7287698	122,00
DC150-03-13.000D1-WJ30RE	WJ30RE	1	●	D10	7287754	146,00
DC150-03-13.100A0-WJ30RE	WJ30RE	1	●	D10	6618178	118,00
DC150-03-13.100A1-WJ30RE	WJ30RE	1	●	D10	6968857	142,00
DC150-03-13.200A1-WJ30RE	WJ30RE	1	●	D10	6968858	142,00
DC150-03-13.200D0-WJ30RE	WJ30RE	1	●	D10	7287699	122,00
DC150-03-13.300A0-WJ30RE	WJ30RE	1	●	D10	6618179	118,00
DC150-03-13.300A1-WJ30RE	WJ30RE	1	●	D10	6968859	142,00
DC150-03-13.300D0-WJ30RE	WJ30RE	1	○	D10	7287700*	122,00
DC150-03-13.400D0-WJ30RE	WJ30RE	1	●	D10	7287701	122,00
DC150-03-13.494A0-WJ30RE	WJ30RE	1	●	D10	6618180	118,00
DC150-03-13.494A1-WJ30RE	WJ30RE	1	●	D10	6968860	142,00
DC150-03-13.500A0-WJ30RE	WJ30RE	1	●	D10	6618181	118,00
DC150-03-13.500A1-WJ30RE	WJ30RE	1	●	D10	6968861	142,00
DC150-03-13.500D0-WJ30RE	WJ30RE	1	●	D10	7287702	122,00
DC150-03-13.600D0-WJ30RE	WJ30RE	1	●	D10	7287703	122,00
DC150-03-13.800A1-WJ30RE	WJ30RE	1	●	D10	6968862	142,00
DC150-03-13.800D0-WJ30RE	WJ30RE	1	●	D10	7287704	122,00
DC150-03-14.000A0-WJ30RE	WJ30RE	1	●	D10	6618182	118,00
DC150-03-14.000A1-WJ30RE	WJ30RE	1	●	D10	6968863	142,00
DC150-03-14.000D0-WJ30RE	WJ30RE	1	●	D10	7287705	122,00
DC150-03-14.000D1-WJ30RE	WJ30RE	1	●	D10	7287755	146,00
DC150-03-14.100A1-WJ30RE	WJ30RE	1	●	D10	6968864	186,00
DC150-03-14.200A0-WJ30RE	WJ30RE	1	●	D10	6618183	155,00
DC150-03-14.200A1-WJ30RE	WJ30RE	1	●	D10	6968865	186,00
DC150-03-14.288A0-WJ30RE	WJ30RE	1	●	D10	6618184	155,00
DC150-03-14.288A1-WJ30RE	WJ30RE	1	●	D10	6968866	186,00
DC150-03-14.500A0-WJ30RE	WJ30RE	1	●	D10	6618185	155,00
DC150-03-14.500A1-WJ30RE	WJ30RE	1	●	D10	6968867	186,00
DC150-03-14.600A1-WJ30RE	WJ30RE	1	●	D10	6968868	186,00
DC150-03-14.700A0-WJ30RE	WJ30RE	1	●	D10	6618186	155,00
DC150-03-14.700A1-WJ30RE	WJ30RE	1	●	D10	6968869	186,00
DC150-03-14.800A0-WJ30RE	WJ30RE	1	●	D10	6618187	155,00
DC150-03-15.000A0-WJ30RE	WJ30RE	1	●	D10	6618188	155,00
DC150-03-15.000A1-WJ30RE	WJ30RE	1	●	D10	6968870	186,00
DC150-03-15.000D0-WJ30RE	WJ30RE	1	●	D10	7287707	159,00
DC150-03-15.000D1-WJ30RE	WJ30RE	1	●	D10	7287756	191,00
DC150-03-15.100A0-WJ30RE	WJ30RE	1	●	D10	6618189	155,00
DC150-03-15.100A1-WJ30RE	WJ30RE	1	●	D10	6968871	186,00
DC150-03-15.100D0-WJ30RE	WJ30RE	1	●	D10	7287708	159,00
DC150-03-15.300A1-WJ30RE	WJ30RE	1	●	D10	6968872	186,00
DC150-03-15.500A0-WJ30RE	WJ30RE	1	●	D10	6618190	155,00
DC150-03-15.500A1-WJ30RE	WJ30RE	1	●	D10	6968873	186,00
DC150-03-15.500D1-WJ30RE	WJ30RE	1	●	D10	7287757	191,00
DC150-03-15.700A1-WJ30RE	WJ30RE	1	●	D10	6968874	186,00
DC150-03-15.800A0-WJ30RE	WJ30RE	1	●	D10	6618191	155,00
DC150-03-15.800A1-WJ30RE	WJ30RE	1	●	D10	6968875	186,00
DC150-03-15.875A0-WJ30RE	WJ30RE	1	●	D10	6618192	155,00
DC150-03-15.875A1-WJ30RE	WJ30RE	1	●	D10	6968876	186,00
DC150-03-16.000A0-WJ30RE	WJ30RE	1	●	D10	6618193	155,00
DC150-03-16.000A1-WJ30RE	WJ30RE	1	●	D10	6968877	186,00
DC150-03-16.000D0-WJ30RE	WJ30RE	1	●	D10	7287709	159,00
DC150-03-16.000D1-WJ30RE	WJ30RE	1	●	D10	7287758	191,00
DC150-03-16.300A1-WJ30RE	WJ30RE	1	●	D10	6968878	235,00
DC150-03-16.500A0-WJ30RE	WJ30RE	1	●	D10	6618194	196,00
DC150-03-16.500A1-WJ30RE	WJ30RE	1	●	D10	6968879	235,00
DC150-03-16.500D0-WJ30RE	WJ30RE	1	●	D10	7287710	201,00
DC150-03-16.500D1-WJ30RE	WJ30RE	1	●	D10	7287759	242,00
DC150-03-16.700A1-WJ30RE	WJ30RE	1	●	D10	6968880	235,00
DC150-03-16.750A0-WJ30RE	WJ30RE	1	●	D10	6618195	196,00
DC150-03-17.000A0-WJ30RE	WJ30RE	1	●	D10	6618196	196,00
DC150-03-17.000A1-WJ30RE	WJ30RE	1	●	D10	6968881	235,00
DC150-03-17.000D0-WJ30RE	WJ30RE	1	●	D10	7287711	201,00
DC150-03-17.000D1-WJ30RE	WJ30RE	1	●	D10	7287760	242,00
DC150-03-17.500A0-WJ30RE	WJ30RE	1	●	D10	6618197	196,00
DC150-03-17.500A1-WJ30RE	WJ30RE	1	●	D10	6968882	235,00
DC150-03-17.500D0-WJ30RE	WJ30RE	1	●	D10	7287712	201,00
DC150-03-17.500D1-WJ30RE	WJ30RE	1	●	D10	7287761	242,00
DC150-03-17.800A0-WJ30RE	WJ30RE	1	●	D10	6618198	196,00
DC150-03-18.000A0-WJ30RE	WJ30RE	1	●	D10	6618199	196,00

Bezeichnung / Designation	Sorte / Grade	VE / US		Disc. Gr.	Article No.	EURO Stück / piece
DC150-03-18.000A1-WJ30RE	WJ30RE	1	●	D10	6968883	235,00
DC150-03-18.000D0-WJ30RE	WJ30RE	1	●	D10	7287713	201,00
DC150-03-18.000D1-WJ30RE	WJ30RE	1	●	D10	7287762	242,00
DC150-03-18.500A1-WJ30RE	WJ30RE	1	●	D10	6968884	284,00
DC150-03-18.500D0-WJ30RE	WJ30RE	1	●	D10	7287714	244,00
DC150-03-19.000A0-WJ30RE	WJ30RE	1	●	D10	6618200	237,00
DC150-03-19.000A1-WJ30RE	WJ30RE	1	●	D10	6968885	284,00
DC150-03-19.000D0-WJ30RE	WJ30RE	1	●	D10	7287715	244,00
DC150-03-19.000D1-WJ30RE	WJ30RE	1	●	D10	7287763	292,00
DC150-03-19.050A1-WJ30RE	WJ30RE	1	●	D10	6968886	284,00
DC150-03-20.000A0-WJ30RE	WJ30RE	1	●	D10	6618201	237,00
DC150-03-20.000A1-WJ30RE	WJ30RE	1	●	D10	6968887	284,00
DC150-03-20.000D0-WJ30RE	WJ30RE	1	●	D10	7287716	244,00
DC150-03-20.000D1-WJ30RE	WJ30RE	1	●	D10	7287764	292,00
DC150-05-03.000A0-WJ30TA	WJ30TA	1	●	D10	7462060	56,90
DC150-05-03.000A1-WJ30RE	WJ30RE	1	●	D10	6618293	68,30
DC150-05-03.000D1-WJ30RE	WJ30RE	1	●	D10	7287765	70,30
DC150-05-03.100A0-WJ30TA	WJ30TA	1	●	D10	7462061	56,90
DC150-05-03.100A1-WJ30RE	WJ30RE	1	●	D10	6618294	68,30
DC150-05-03.100D1-WJ30RE	WJ30RE	1	●	D10	7287766	70,30
DC150-05-03.175A0-WJ30TA	WJ30TA	1	●	D10	7462062	56,90
DC150-05-03.175A1-WJ30RE	WJ30RE	1	●	D10	6618295	68,30
DC150-05-03.200A0-WJ30TA	WJ30TA	1	●	D10	7462063	56,90
DC150-05-03.200A1-WJ30RE	WJ30RE	1	●	D10	6618296	68,30
DC150-05-03.200D1-WJ30RE	WJ30RE	1	●	D10	7287767	70,30
DC150-05-03.250A0-WJ30TA	WJ30TA	1	●	D10	7462064	56,90
DC150-05-03.250A1-WJ30RE	WJ30RE	1	●	D10	6618297	68,30
DC150-05-03.300A0-WJ30TA	WJ30TA	1	●	D10	7462065	56,90
DC150-05-03.300A1-WJ30RE	WJ30RE	1	●	D10	6618298	68,30
DC150-05-03.300D1-WJ30RE	WJ30RE	1	●	D10	7287768	70,30
DC150-05-03.400A0-WJ30TA	WJ30TA	1	●	D10	7462066	56,90
DC150-05-03.400A1-WJ30RE	WJ30RE	1	●	D10	6618299	68,30
DC150-05-03.400D1-WJ30RE	WJ30RE	1	●	D10	7287769	70,30
DC150-05-03.500A0-WJ30TA	WJ30TA	1	●	D10	7462067	56,90
DC150-05-03.500A1-WJ30RE	WJ30RE	1	●	D10	6618300	68,30
DC150-05-03.500D1-WJ30RE	WJ30RE	1	●	D10	7287770	70,30
DC150-05-03.572A1-WJ30RE	WJ30RE	1	●	D10	6618301	68,30
DC150-05-03.600A0-WJ30TA	WJ30TA	1	●	D10	7462068	56,90
DC150-05-03.600A1-WJ30RE	WJ30RE	1	●	D10	6618302	68,30
DC150-05-03.600D1-WJ30RE	WJ30RE	1	●	D10	7287771	70,30
DC150-05-03.650A0-WJ30TA	WJ30TA	1	●	D10	7462069	56,90
DC150-05-03.650A1-WJ30RE	WJ30RE	1	●	D10	6618303	68,30
DC150-05-03.700A0-WJ30TA	WJ30TA	1	●	D10	7462070	56,90
DC150-05-03.700A1-WJ30RE	WJ30RE	1	●	D10	6618304	68,30
DC150-05-03.700D1-WJ30RE	WJ30RE	1	●	D10	7287772	70,30
DC150-05-03.800A0-WJ30TA	WJ30TA	1	●	D10	7462071	56,90
DC150-05-03.800A1-WJ30RE	WJ30RE	1	●	D10	6618305	68,30
DC150-05-03.800D1-WJ30RE	WJ30RE	1	●	D10	7287773	70,30
DC150-05-03.900A0-WJ30TA	WJ30TA	1	●	D10	7462072	56,90
DC150-05-03.900A1-WJ30RE	WJ30RE	1	●	D10	6618306	68,30
DC150-05-03.900D1-WJ30RE	WJ30RE	1	●	D10	7287774	70,30
DC150-05-03.969A0-WJ30TA	WJ30TA	1	●	D10	7462073	56,90
DC150-05-03.969A1-WJ30RE	WJ30RE	1	●	D10	6618307	68,30
DC150-05-04.000A0-WJ30TA	WJ30TA	1	●	D10	7462074	56,90
DC150-05-04.000A1-WJ30RE	WJ30RE	1	●	D10	6618308	68,30
DC150-05-04.000D1-WJ30RE	WJ30RE	1	●	D10	7287775	70,30
DC150-05-04.100A0-WJ30TA	WJ30TA	1	●	D10	7462075	56,90
DC150-05-04.100A1-WJ30RE	WJ30RE	1	●	D10	6618309	68,30
DC150-05-04.100D1-WJ30RE	WJ30RE	1	●	D10	7287776	70,30
DC150-05-04.200A0-WJ30TA	WJ30TA	1	●	D10	7462076	56,90
DC150-05-04.200A1-WJ30RE	WJ30RE	1	●	D10	6618310	68,30
DC150-05-04.200D1-WJ30RE	WJ30RE	1	●	D10	7287777	70,30
DC150-05-04.300A0-WJ30TA	WJ30TA	1	●	D10	7462077	56,90
DC150-05-04.300A1-WJ30RE	WJ30RE	1	●	D10	6618311	68,30
DC150-05-04.300D1-WJ30RE	WJ30RE	1	●	D10	7287778	70,30
DC150-05-04.366A0-WJ30TA	WJ30TA	1	●	D10	7462078	56,90
DC150-05-04.366A1-WJ30RE	WJ30RE	1	●	D10	6618312	68,30
DC150-05-04.400A0-WJ30TA	WJ30TA	1	●	D10	7462079	56,90
DC150-05-04.400A1-WJ30RE	WJ30RE	1	●	D10	6618313	68,30
DC150-05-04.400D1-WJ30RE	WJ30RE	1	●	D10	7287779	70,30

Bezeichnung / Designation	Sorte / Grade	VE / US		Disc. Gr.	Article No.	EURO Stück / piece
DC150-05-04.500A0-WJ30TA	WJ30TA	1	●	D10	7462080	56,90
DC150-05-04.500A1-WJ30RE	WJ30RE	1	●	D10	6618314	68,30
DC150-05-04.500D1-WJ30RE	WJ30RE	1	●	D10	7287780	70,30
DC150-05-04.600A0-WJ30TA	WJ30TA	1	●	D10	7462081	56,90
DC150-05-04.600A1-WJ30RE	WJ30RE	1	●	D10	6618315	68,30
DC150-05-04.600D1-WJ30RE	WJ30RE	1	●	D10	7287781	70,30
DC150-05-04.650A0-WJ30TA	WJ30TA	1	●	D10	7462082	56,90
DC150-05-04.650A1-WJ30RE	WJ30RE	1	●	D10	6618316	68,30
DC150-05-04.650D1-WJ30RE	WJ30RE	1	●	D10	7287782	70,30
DC150-05-04.700A0-WJ30TA	WJ30TA	1	●	D10	7462083	56,90
DC150-05-04.700A1-WJ30RE	WJ30RE	1	●	D10	6618317	68,30
DC150-05-04.700D1-WJ30RE	WJ30RE	1	●	D10	7287783	70,30
DC150-05-04.763A0-WJ30TA	WJ30TA	1	●	D10	7462084	56,90
DC150-05-04.763A1-WJ30RE	WJ30RE	1	●	D10	6618318	68,30
DC150-05-04.800A0-WJ30TA	WJ30TA	1	●	D10	7462085	56,90
DC150-05-04.800A1-WJ30RE	WJ30RE	1	●	D10	6618319	68,30
DC150-05-04.800D1-WJ30RE	WJ30RE	1	●	D10	7287784	70,30
DC150-05-04.900A0-WJ30TA	WJ30TA	1	●	D10	7462086	56,90
DC150-05-04.900A1-WJ30RE	WJ30RE	1	●	D10	6618320	68,30
DC150-05-04.900D1-WJ30RE	WJ30RE	1	●	D10	7287785	70,30
DC150-05-05.000A0-WJ30TA	WJ30TA	1	●	D10	7462087	56,90
DC150-05-05.000A1-WJ30RE	WJ30RE	1	●	D10	6618321	68,30
DC150-05-05.000D1-WJ30RE	WJ30RE	1	●	D10	7287786	70,30
DC150-05-05.100A0-WJ30TA	WJ30TA	1	●	D10	7462088	56,90
DC150-05-05.100A1-WJ30RE	WJ30RE	1	●	D10	6618322	68,30
DC150-05-05.100D1-WJ30RE	WJ30RE	1	●	D10	7287787	70,30
DC150-05-05.159A0-WJ30TA	WJ30TA	1	●	D10	7462089	56,90
DC150-05-05.159A1-WJ30RE	WJ30RE	1	●	D10	6618323	68,30
DC150-05-05.200A0-WJ30TA	WJ30TA	1	●	D10	7462090	56,90
DC150-05-05.200A1-WJ30RE	WJ30RE	1	●	D10	6618324	68,30
DC150-05-05.200D1-WJ30RE	WJ30RE	1	●	D10	7287788	70,30
DC150-05-05.300A0-WJ30TA	WJ30TA	1	●	D10	7462091	56,90
DC150-05-05.300A1-WJ30RE	WJ30RE	1	●	D10	6618325	68,30
DC150-05-05.300D1-WJ30RE	WJ30RE	1	●	D10	7287789	70,30
DC150-05-05.400A0-WJ30TA	WJ30TA	1	●	D10	7462092	56,90
DC150-05-05.400A1-WJ30RE	WJ30RE	1	●	D10	6618326	68,30
DC150-05-05.400D1-WJ30RE	WJ30RE	1	●	D10	7287790	70,30
DC150-05-05.500A0-WJ30TA	WJ30TA	1	●	D10	7462093	56,90
DC150-05-05.500A1-WJ30RE	WJ30RE	1	●	D10	6618327	68,30
DC150-05-05.500D1-WJ30RE	WJ30RE	1	●	D10	7287791	70,30
DC150-05-05.550A0-WJ30TA	WJ30TA	1	●	D10	7462094	56,90
DC150-05-05.550A1-WJ30RE	WJ30RE	1	●	D10	6618328	68,30
DC150-05-05.550D1-WJ30RE	WJ30RE	1	●	D10	7287792	70,30
DC150-05-05.556A0-WJ30TA	WJ30TA	1	●	D10	7462095	56,90
DC150-05-05.556A1-WJ30RE	WJ30RE	1	●	D10	6618329	68,30
DC150-05-05.600A0-WJ30TA	WJ30TA	1	●	D10	7462096	56,90
DC150-05-05.600A1-WJ30RE	WJ30RE	1	●	D10	6618330	68,30
DC150-05-05.600D1-WJ30RE	WJ30RE	1	●	D10	7287793	70,30
DC150-05-05.700A0-WJ30TA	WJ30TA	1	●	D10	7462097	56,90
DC150-05-05.700A1-WJ30RE	WJ30RE	1	●	D10	6618331	68,30
DC150-05-05.700D1-WJ30RE	WJ30RE	1	●	D10	7287794	70,30
DC150-05-05.800A0-WJ30TA	WJ30TA	1	●	D10	7462098	56,90
DC150-05-05.800A1-WJ30RE	WJ30RE	1	●	D10	6618332	68,30
DC150-05-05.800D1-WJ30RE	WJ30RE	1	●	D10	7287795	70,30
DC150-05-05.900A0-WJ30TA	WJ30TA	1	●	D10	7462099	56,90
DC150-05-05.900A1-WJ30RE	WJ30RE	1	●	D10	6618333	68,30
DC150-05-05.900D1-WJ30RE	WJ30RE	1	●	D10	7287796	70,30
DC150-05-05.953A0-WJ30TA	WJ30TA	1	●	D10	7462100	56,90
DC150-05-05.953A1-WJ30RE	WJ30RE	1	●	D10	6618334	68,30
DC150-05-06.000A0-WJ30TA	WJ30TA	1	●	D10	7462101	56,90
DC150-05-06.000A1-WJ30RE	WJ30RE	1	●	D10	6618335	68,30
DC150-05-06.000D1-WJ30RE	WJ30RE	1	●	D10	7287797	70,30
DC150-05-06.100A0-WJ30TA	WJ30TA	1	●	D10	7462102	68,20
DC150-05-06.100A1-WJ30RE	WJ30RE	1	●	D10	6618336	81,90
DC150-05-06.100D1-WJ30RE	WJ30RE	1	●	D10	7287798	84,40
DC150-05-06.200A0-WJ30TA	WJ30TA	1	●	D10	7462103	68,20
DC150-05-06.200A1-WJ30RE	WJ30RE	1	●	D10	6618337	81,90
DC150-05-06.200D1-WJ30RE	WJ30RE	1	●	D10	7287799	84,40
DC150-05-06.300A0-WJ30TA	WJ30TA	1	●	D10	7462104	68,20
DC150-05-06.300A1-WJ30RE	WJ30RE	1	●	D10	6618338	81,90

Bezeichnung / Designation	Sorte / Grade	VE / US		Disc. Gr.	Article No.	EURO Stück / piece
DC150-05-06.300D1-WJ30RE	WJ30RE	1	●	D10	7287800	84,40
DC150-05-06.350A0-WJ30TA	WJ30TA	1	●	D10	7462105	68,20
DC150-05-06.350A1-WJ30RE	WJ30RE	1	●	D10	6618339	81,90
DC150-05-06.400A0-WJ30TA	WJ30TA	1	●	D10	7462106	68,20
DC150-05-06.400A1-WJ30RE	WJ30RE	1	●	D10	6618340	81,90
DC150-05-06.400D1-WJ30RE	WJ30RE	1	●	D10	7287801	84,40
DC150-05-06.500A0-WJ30TA	WJ30TA	1	●	D10	7462107	68,20
DC150-05-06.500A1-WJ30RE	WJ30RE	1	●	D10	6618341	81,90
DC150-05-06.500D1-WJ30RE	WJ30RE	1	●	D10	7287802	84,40
DC150-05-06.600A0-WJ30TA	WJ30TA	1	●	D10	7462108	68,20
DC150-05-06.600A1-WJ30RE	WJ30RE	1	●	D10	6618342	81,90
DC150-05-06.600D1-WJ30RE	WJ30RE	1	●	D10	7287803	84,40
DC150-05-06.700A0-WJ30TA	WJ30TA	1	●	D10	7462109	68,20
DC150-05-06.700A1-WJ30RE	WJ30RE	1	●	D10	6618343	81,90
DC150-05-06.700D1-WJ30RE	WJ30RE	1	●	D10	7287804	84,40
DC150-05-06.747A0-WJ30TA	WJ30TA	1	●	D10	7462110	68,20
DC150-05-06.747A1-WJ30RE	WJ30RE	1	●	D10	6618344	81,90
DC150-05-06.800A0-WJ30TA	WJ30TA	1	●	D10	7462111	68,20
DC150-05-06.800A1-WJ30RE	WJ30RE	1	●	D10	6618345	81,90
DC150-05-06.800D1-WJ30RE	WJ30RE	1	●	D10	7287805	84,40
DC150-05-06.900A0-WJ30TA	WJ30TA	1	●	D10	7462112	68,20
DC150-05-06.900A1-WJ30RE	WJ30RE	1	●	D10	6618346	81,90
DC150-05-06.900D1-WJ30RE	WJ30RE	1	●	D10	7287806	84,40
DC150-05-07.000A0-WJ30TA	WJ30TA	1	●	D10	7462113	68,20
DC150-05-07.000A1-WJ30RE	WJ30RE	1	●	D10	6618347	81,90
DC150-05-07.000D1-WJ30RE	WJ30RE	1	●	D10	7287807	84,40
DC150-05-07.100A0-WJ30TA	WJ30TA	1	●	D10	7462114	68,20
DC150-05-07.100A1-WJ30RE	WJ30RE	1	●	D10	6618348	81,90
DC150-05-07.100D1-WJ30RE	WJ30RE	1	●	D10	7287808	84,40
DC150-05-07.144A0-WJ30TA	WJ30TA	1	●	D10	7462115	68,20
DC150-05-07.144A1-WJ30RE	WJ30RE	1	●	D10	6618349	81,90
DC150-05-07.200A0-WJ30TA	WJ30TA	1	●	D10	7462116	68,20
DC150-05-07.200A1-WJ30RE	WJ30RE	1	●	D10	6618350	81,90
DC150-05-07.200D1-WJ30RE	WJ30RE	1	●	D10	7287809	84,40
DC150-05-07.300A0-WJ30TA	WJ30TA	1	●	D10	7462117	68,20
DC150-05-07.300A1-WJ30RE	WJ30RE	1	●	D10	6618351	81,90
DC150-05-07.300D1-WJ30RE	WJ30RE	1	●	D10	7287810	84,40
DC150-05-07.400A0-WJ30TA	WJ30TA	1	●	D10	7462118	68,20
DC150-05-07.400A1-WJ30RE	WJ30RE	1	●	D10	6618352	81,90
DC150-05-07.400D1-WJ30RE	WJ30RE	1	●	D10	7287812	84,40
DC150-05-07.500A0-WJ30TA	WJ30TA	1	●	D10	7462119	68,20
DC150-05-07.500A1-WJ30RE	WJ30RE	1	●	D10	6618353	81,90
DC150-05-07.500D1-WJ30RE	WJ30RE	1	●	D10	7287813	84,40
DC150-05-07.541A1-WJ30RE	WJ30RE	1	●	D10	6618354	81,90
DC150-05-07.550A1-WJ30RE	WJ30RE	1	●	D10	6618355	81,90
DC150-05-07.600A1-WJ30RE	WJ30RE	1	●	D10	6618356	81,90
DC150-05-07.600D1-WJ30RE	WJ30RE	1	●	D10	7287814	84,40
DC150-05-07.700A0-WJ30TA	WJ30TA	1	●	D10	7462121	68,20
DC150-05-07.700A1-WJ30RE	WJ30RE	1	●	D10	6618357	81,90
DC150-05-07.700D1-WJ30RE	WJ30RE	1	●	D10	7287815	84,40
DC150-05-07.800A0-WJ30TA	WJ30TA	1	●	D10	7462122	68,20
DC150-05-07.800A1-WJ30RE	WJ30RE	1	●	D10	6618358	81,90
DC150-05-07.800D1-WJ30RE	WJ30RE	1	●	D10	7287816	84,40
DC150-05-07.900A0-WJ30TA	WJ30TA	1	●	D10	7462123	68,20
DC150-05-07.900A1-WJ30RE	WJ30RE	1	●	D10	6618359	81,90
DC150-05-07.900D1-WJ30RE	WJ30RE	1	●	D10	7287817	84,40
DC150-05-07.938A0-WJ30TA	WJ30TA	1	●	D10	7462124	68,20
DC150-05-07.938A1-WJ30RE	WJ30RE	1	●	D10	6618360	81,90
DC150-05-08.000A0-WJ30TA	WJ30TA	1	●	D10	7462125	68,20
DC150-05-08.000A1-WJ30RE	WJ30RE	1	●	D10	6618361	81,90
DC150-05-08.000D1-WJ30RE	WJ30RE	1	●	D10	7287818	84,40
DC150-05-08.100A0-WJ30TA	WJ30TA	1	●	D10	7462126	79,60
DC150-05-08.100A1-WJ30RE	WJ30RE	1	●	D10	6618362	95,60
DC150-05-08.100D1-WJ30RE	WJ30RE	1	●	D10	7287819	98,40
DC150-05-08.200A0-WJ30TA	WJ30TA	1	●	D10	7462127	79,60
DC150-05-08.200A1-WJ30RE	WJ30RE	1	●	D10	6618363	95,60
DC150-05-08.200D1-WJ30RE	WJ30RE	1	●	D10	7287820	98,40
DC150-05-08.300A0-WJ30TA	WJ30TA	1	●	D10	7462128	79,60
DC150-05-08.300A1-WJ30RE	WJ30RE	1	●	D10	6618364	95,60
DC150-05-08.300D1-WJ30RE	WJ30RE	1	●	D10	7287821	98,40

Bezeichnung / Designation	Sorte / Grade	VE / US		Disc. Gr.	Article No.	EURO Stück / piece
DC150-05-08.334A0-WJ30TA	WJ30TA	1	●	D10	7462129	79,60
DC150-05-08.334A1-WJ30RE	WJ30RE	1	●	D10	6618365	95,60
DC150-05-08.400A0-WJ30TA	WJ30TA	1	●	D10	7462130	79,60
DC150-05-08.400A1-WJ30RE	WJ30RE	1	●	D10	6618366	95,60
DC150-05-08.400D1-WJ30RE	WJ30RE	1	●	D10	7287822	98,40
DC150-05-08.500A0-WJ30TA	WJ30TA	1	●	D10	7462131	79,60
DC150-05-08.500A1-WJ30RE	WJ30RE	1	●	D10	6618367	95,60
DC150-05-08.500D1-WJ30RE	WJ30RE	1	●	D10	7287823	98,40
DC150-05-08.600A0-WJ30TA	WJ30TA	1	●	D10	7462132	79,60
DC150-05-08.600A1-WJ30RE	WJ30RE	1	●	D10	6618368	95,60
DC150-05-08.600D1-WJ30RE	WJ30RE	1	●	D10	7287824	98,40
DC150-05-08.700A0-WJ30TA	WJ30TA	1	●	D10	7462133	79,60
DC150-05-08.700A1-WJ30RE	WJ30RE	1	●	D10	6618369	95,60
DC150-05-08.700D1-WJ30RE	WJ30RE	1	●	D10	7287825	98,40
DC150-05-08.731A0-WJ30TA	WJ30TA	1	●	D10	7462134	79,60
DC150-05-08.731A1-WJ30RE	WJ30RE	1	●	D10	6618370	95,60
DC150-05-08.800A0-WJ30TA	WJ30TA	1	●	D10	7462135	79,60
DC150-05-08.800A1-WJ30RE	WJ30RE	1	●	D10	6618371	95,60
DC150-05-08.800D1-WJ30RE	WJ30RE	1	●	D10	7287826	98,40
DC150-05-08.900A0-WJ30TA	WJ30TA	1	●	D10	7462136	79,60
DC150-05-08.900A1-WJ30RE	WJ30RE	1	●	D10	6618372	95,60
DC150-05-09.000A0-WJ30TA	WJ30TA	1	●	D10	7462137	79,60
DC150-05-09.000A1-WJ30RE	WJ30RE	1	●	D10	6618373	95,60
DC150-05-09.000D1-WJ30RE	WJ30RE	1	●	D10	7287827	98,40
DC150-05-09.100A0-WJ30TA	WJ30TA	1	●	D10	7462138	79,60
DC150-05-09.100A1-WJ30RE	WJ30RE	1	●	D10	6618374	95,60
DC150-05-09.100D1-WJ30RE	WJ30RE	1	●	D10	7287828	98,40
DC150-05-09.128A0-WJ30TA	WJ30TA	1	●	D10	7462139	79,60
DC150-05-09.128A1-WJ30RE	WJ30RE	1	●	D10	6618375	95,60
DC150-05-09.200A0-WJ30TA	WJ30TA	1	●	D10	7462140	79,60
DC150-05-09.200A1-WJ30RE	WJ30RE	1	●	D10	6618376	95,60
DC150-05-09.200D1-WJ30RE	WJ30RE	1	●	D10	7287829	98,40
DC150-05-09.300A0-WJ30TA	WJ30TA	1	●	D10	7462141	79,60
DC150-05-09.300A1-WJ30RE	WJ30RE	1	●	D10	6618377	95,60
DC150-05-09.300D1-WJ30RE	WJ30RE	1	●	D10	7287830	98,40
DC150-05-09.400A0-WJ30TA	WJ30TA	1	●	D10	7462142	79,60
DC150-05-09.400A1-WJ30RE	WJ30RE	1	●	D10	6618378	95,60
DC150-05-09.400D1-WJ30RE	WJ30RE	1	●	D10	7287831	98,40
DC150-05-09.500A0-WJ30TA	WJ30TA	1	●	D10	7462143	79,60
DC150-05-09.500A1-WJ30RE	WJ30RE	1	●	D10	6618379	95,60
DC150-05-09.500D1-WJ30RE	WJ30RE	1	●	D10	7287832	98,40
DC150-05-09.525A0-WJ30TA	WJ30TA	1	●	D10	7462144	79,60
DC150-05-09.525A1-WJ30RE	WJ30RE	1	●	D10	6618380	95,60
DC150-05-09.550A1-WJ30RE	WJ30RE	1	●	D10	6618381	95,60
DC150-05-09.600A0-WJ30TA	WJ30TA	1	●	D10	7462145	79,60
DC150-05-09.600A1-WJ30RE	WJ30RE	1	●	D10	6618382	95,60
DC150-05-09.600D1-WJ30RE	WJ30RE	1	●	D10	7287833	98,40
DC150-05-09.700A0-WJ30TA	WJ30TA	1	●	D10	7462146	79,60
DC150-05-09.700A1-WJ30RE	WJ30RE	1	●	D10	6618383	95,60
DC150-05-09.700D1-WJ30RE	WJ30RE	1	●	D10	7287834	98,40
DC150-05-09.800A0-WJ30TA	WJ30TA	1	●	D10	7462147	79,60
DC150-05-09.800A1-WJ30RE	WJ30RE	1	●	D10	6618384	95,60
DC150-05-09.800D1-WJ30RE	WJ30RE	1	●	D10	7287835	98,40
DC150-05-09.900A0-WJ30TA	WJ30TA	1	●	D10	7462148	79,60
DC150-05-09.900A1-WJ30RE	WJ30RE	1	●	D10	6618385	95,60
DC150-05-09.900D1-WJ30RE	WJ30RE	1	●	D10	7287836	98,40
DC150-05-09.922A0-WJ30TA	WJ30TA	1	●	D10	7462149	79,60
DC150-05-09.922A1-WJ30RE	WJ30RE	1	●	D10	6618386	95,60
DC150-05-10.000A0-WJ30TA	WJ30TA	1	●	D10	7462150	79,60
DC150-05-10.000A1-WJ30RE	WJ30RE	1	●	D10	6618387	95,60
DC150-05-10.000D1-WJ30RE	WJ30RE	1	●	D10	7287837	98,40
DC150-05-10.100A0-WJ30TA	WJ30TA	1	●	D10	7462151	108,00
DC150-05-10.100A1-WJ30RE	WJ30RE	1	●	D10	6618388	130,00
DC150-05-10.100D1-WJ30RE	WJ30RE	1	●	D10	7287838	134,00
DC150-05-10.200A0-WJ30TA	WJ30TA	1	●	D10	7462152	108,00
DC150-05-10.200A1-WJ30RE	WJ30RE	1	●	D10	6618389	130,00
DC150-05-10.200D1-WJ30RE	WJ30RE	1	●	D10	7287839	134,00
DC150-05-10.300A0-WJ30TA	WJ30TA	1	●	D10	7462153	108,00
DC150-05-10.300A1-WJ30RE	WJ30RE	1	●	D10	6618390	130,00
DC150-05-10.300D1-WJ30RE	WJ30RE	1	●	D10	7287840	134,00

Bezeichnung / Designation	Sorte / Grade	VE / US		Disc. Gr.	Article No.	EURO Stück / piece
DC150-05-10.319A0-WJ30TA	WJ30TA	1	●	D10	7462154	108,00
DC150-05-10.319A1-WJ30RE	WJ30RE	1	●	D10	6618391	130,00
DC150-05-10.400A0-WJ30TA	WJ30TA	1	●	D10	7462155	108,00
DC150-05-10.400A1-WJ30RE	WJ30RE	1	●	D10	6618392	130,00
DC150-05-10.400D1-WJ30RE	WJ30RE	1	●	D10	7287841	134,00
DC150-05-10.500A0-WJ30TA	WJ30TA	1	●	D10	7462156	108,00
DC150-05-10.500A1-WJ30RE	WJ30RE	1	●	D10	6618393	130,00
DC150-05-10.500D1-WJ30RE	WJ30RE	1	●	D10	7287842	134,00
DC150-05-10.600A0-WJ30TA	WJ30TA	1	●	D10	7462157	108,00
DC150-05-10.600A1-WJ30RE	WJ30RE	1	●	D10	6618394	130,00
DC150-05-10.600D1-WJ30RE	WJ30RE	1	●	D10	7287843	134,00
DC150-05-10.700A0-WJ30TA	WJ30TA	1	●	D10	7462158	108,00
DC150-05-10.700A1-WJ30RE	WJ30RE	1	●	D10	6618395	130,00
DC150-05-10.716A0-WJ30TA	WJ30TA	1	●	D10	7462159	108,00
DC150-05-10.716A1-WJ30RE	WJ30RE	1	●	D10	6618396	130,00
DC150-05-10.800A0-WJ30TA	WJ30TA	1	●	D10	7462160	108,00
DC150-05-10.800A1-WJ30RE	WJ30RE	1	●	D10	6618397	130,00
DC150-05-10.800D1-WJ30RE	WJ30RE	1	●	D10	7287844	134,00
DC150-05-10.900A1-WJ30RE	WJ30RE	1	●	D10	6618398	130,00
DC150-05-11.000A0-WJ30TA	WJ30TA	1	●	D10	7462161	108,00
DC150-05-11.000A1-WJ30RE	WJ30RE	1	●	D10	6618399	130,00
DC150-05-11.000D1-WJ30RE	WJ30RE	1	●	D10	7287845	134,00
DC150-05-11.100A1-WJ30RE	WJ30RE	1	●	D10	6618400	130,00
DC150-05-11.100D1-WJ30RE	WJ30RE	1	●	D10	7287846	134,00
DC150-05-11.113A0-WJ30TA	WJ30TA	1	●	D10	7462162	108,00
DC150-05-11.113A1-WJ30RE	WJ30RE	1	●	D10	6618401	130,00
DC150-05-11.200A0-WJ30TA	WJ30TA	1	●	D10	7462163	108,00
DC150-05-11.200A1-WJ30RE	WJ30RE	1	●	D10	6618402	130,00
DC150-05-11.200D1-WJ30RE	WJ30RE	1	●	D10	7287847	134,00
DC150-05-11.300A1-WJ30RE	WJ30RE	1	●	D10	6618403	130,00
DC150-05-11.300D1-WJ30RE	WJ30RE	1	●	D10	7287848	134,00
DC150-05-11.400A1-WJ30RE	WJ30RE	1	●	D10	6618404	130,00
DC150-05-11.500A0-WJ30TA	WJ30TA	1	●	D10	7462164	108,00
DC150-05-11.500A1-WJ30RE	WJ30RE	1	●	D10	6618405	130,00
DC150-05-11.500D1-WJ30RE	WJ30RE	1	●	D10	7287849	134,00
DC150-05-11.509A1-WJ30RE	WJ30RE	1	●	D10	6618406	130,00
DC150-05-11.600A1-WJ30RE	WJ30RE	1	●	D10	6618407	130,00
DC150-05-11.600D1-WJ30RE	WJ30RE	1	●	D10	7287850	134,00
DC150-05-11.700A1-WJ30RE	WJ30RE	1	●	D10	6618408	130,00
DC150-05-11.700D1-WJ30RE	WJ30RE	1	●	D10	7287851	134,00
DC150-05-11.800A0-WJ30TA	WJ30TA	1	●	D10	7462165	108,00
DC150-05-11.800A1-WJ30RE	WJ30RE	1	●	D10	6618409	130,00
DC150-05-11.800D1-WJ30RE	WJ30RE	1	●	D10	7287852	134,00
DC150-05-11.900A1-WJ30RE	WJ30RE	1	●	D10	6618410	130,00
DC150-05-11.900D1-WJ30RE	WJ30RE	1	●	D10	7287853	134,00
DC150-05-11.906A0-WJ30TA	WJ30TA	1	●	D10	7462166	108,00
DC150-05-11.906A1-WJ30RE	WJ30RE	1	●	D10	6618411	130,00
DC150-05-12.000A0-WJ30TA	WJ30TA	1	●	D10	7462167	108,00
DC150-05-12.000A1-WJ30RE	WJ30RE	1	●	D10	6618412	130,00
DC150-05-12.000D1-WJ30RE	WJ30RE	1	●	D10	7287854	134,00
DC150-05-12.100A1-WJ30RE	WJ30RE	1	●	D10	6618413	177,00
DC150-05-12.100D1-WJ30RE	WJ30RE	1	●	D10	7287855	183,00
DC150-05-12.200A0-WJ30TA	WJ30TA	1	●	D10	7462168	148,00
DC150-05-12.200A1-WJ30RE	WJ30RE	1	●	D10	6618414	177,00
DC150-05-12.200D1-WJ30RE	WJ30RE	1	●	D10	7287856	183,00
DC150-05-12.250A1-WJ30RE	WJ30RE	1	●	D10	6618415	177,00
DC150-05-12.300A0-WJ30TA	WJ30TA	1	●	D10	7462169	148,00
DC150-05-12.300A1-WJ30RE	WJ30RE	1	●	D10	6618416	177,00
DC150-05-12.300D1-WJ30RE	WJ30RE	1	●	D10	7287857	183,00
DC150-05-12.303A1-WJ30RE	WJ30RE	1	●	D10	6618417	177,00
DC150-05-12.400A0-WJ30TA	WJ30TA	1	●	D10	7462170	148,00
DC150-05-12.400A1-WJ30RE	WJ30RE	1	●	D10	6618418	177,00
DC150-05-12.400D1-WJ30RE	WJ30RE	1	●	D10	7287858	183,00
DC150-05-12.500A0-WJ30TA	WJ30TA	1	●	D10	7462171	148,00
DC150-05-12.500A1-WJ30RE	WJ30RE	1	●	D10	6618419	177,00
DC150-05-12.500D1-WJ30RE	WJ30RE	1	●	D10	7287859	183,00
DC150-05-12.600A0-WJ30TA	WJ30TA	1	●	D10	7462172	148,00
DC150-05-12.600A1-WJ30RE	WJ30RE	1	●	D10	6618420	177,00
DC150-05-12.700A0-WJ30TA	WJ30TA	1	●	D10	7462173	148,00
DC150-05-12.700A1-WJ30RE	WJ30RE	1	●	D10	6618421	177,00

Bezeichnung / Designation	Sorte / Grade	VE / US		Disc. Gr.	Article No.	EURO Stück / piece
DC150-05-12.700D1-WJ30RE	WJ30RE	1	●	D10	7287860	183,00
DC150-05-12.800A1-WJ30RE	WJ30RE	1	●	D10	6618422	177,00
DC150-05-12.800D1-WJ30RE	WJ30RE	1	●	D10	7287861	183,00
DC150-05-12.900A1-WJ30RE	WJ30RE	1	●	D10	6618423	177,00
DC150-05-13.000A0-WJ30TA	WJ30TA	1	●	D10	7462174	148,00
DC150-05-13.000A1-WJ30RE	WJ30RE	1	●	D10	6618424	177,00
DC150-05-13.000D1-WJ30RE	WJ30RE	1	●	D10	7287862	183,00
DC150-05-13.100A1-WJ30RE	WJ30RE	1	●	D10	6618425	177,00
DC150-05-13.100D1-WJ30RE	WJ30RE	1	●	D10	7287863	183,00
DC150-05-13.200A0-WJ30TA	WJ30TA	1	●	D10	7462175	148,00
DC150-05-13.200A1-WJ30RE	WJ30RE	1	●	D10	6618426	177,00
DC150-05-13.200D1-WJ30RE	WJ30RE	1	●	D10	7287864	183,00
DC150-05-13.300A1-WJ30RE	WJ30RE	1	●	D10	6618427	177,00
DC150-05-13.400A1-WJ30RE	WJ30RE	1	●	D10	6618428	177,00
DC150-05-13.494A0-WJ30TA	WJ30TA	1	●	D10	7462176	148,00
DC150-05-13.494A1-WJ30RE	WJ30RE	1	●	D10	6618429	177,00
DC150-05-13.500A0-WJ30TA	WJ30TA	1	●	D10	7462177	148,00
DC150-05-13.500A1-WJ30RE	WJ30RE	1	●	D10	6618430	177,00
DC150-05-13.500D1-WJ30RE	WJ30RE	1	●	D10	7287865	183,00
DC150-05-13.600A1-WJ30RE	WJ30RE	1	●	D10	6618431	177,00
DC150-05-13.700A1-WJ30RE	WJ30RE	1	●	D10	6618432	177,00
DC150-05-13.800A0-WJ30TA	WJ30TA	1	●	D10	7462178	148,00
DC150-05-13.800A1-WJ30RE	WJ30RE	1	●	D10	6618433	177,00
DC150-05-13.800D1-WJ30RE	WJ30RE	1	●	D10	7287866	183,00
DC150-05-13.900A1-WJ30RE	WJ30RE	1	●	D10	6618434	177,00
DC150-05-14.000A0-WJ30TA	WJ30TA	1	●	D10	7462179	148,00
DC150-05-14.000A1-WJ30RE	WJ30RE	1	●	D10	6618435	177,00
DC150-05-14.000D1-WJ30RE	WJ30RE	1	●	D10	7287867	183,00
DC150-05-14.100A1-WJ30RE	WJ30RE	1	●	D10	6618436	232,00
DC150-05-14.100D1-WJ30RE	WJ30RE	1	●	D10	7287868	239,00
DC150-05-14.200A0-WJ30TA	WJ30TA	1	●	D10	7462180	193,00
DC150-05-14.200A1-WJ30RE	WJ30RE	1	●	D10	6618437	232,00
DC150-05-14.200D1-WJ30RE	WJ30RE	1	●	D10	7287869	239,00
DC150-05-14.288A0-WJ30TA	WJ30TA	1	●	D10	7462181	193,00
DC150-05-14.288A1-WJ30RE	WJ30RE	1	●	D10	6618438	232,00
DC150-05-14.300A1-WJ30RE	WJ30RE	1	●	D10	6618439	232,00
DC150-05-14.300D1-WJ30RE	WJ30RE	1	●	D10	7287870	239,00
DC150-05-14.500A0-WJ30TA	WJ30TA	1	●	D10	7462182	193,00
DC150-05-14.500A1-WJ30RE	WJ30RE	1	●	D10	6618440	232,00
DC150-05-14.500D1-WJ30RE	WJ30RE	1	●	D10	7287871	239,00
DC150-05-14.600A1-WJ30RE	WJ30RE	1	●	D10	6618441	232,00
DC150-05-14.600D1-WJ30RE	WJ30RE	1	●	D10	7287872	239,00
DC150-05-14.700A1-WJ30RE	WJ30RE	1	●	D10	6618442	232,00
DC150-05-14.750A1-WJ30RE	WJ30RE	1	●	D10	6618443	232,00
DC150-05-14.800A1-WJ30RE	WJ30RE	1	●	D10	6618444	232,00
DC150-05-14.800D1-WJ30RE	WJ30RE	1	●	D10	7287873	239,00
DC150-05-15.000A0-WJ30TA	WJ30TA	1	●	D10	7462183	193,00
DC150-05-15.000A1-WJ30RE	WJ30RE	1	●	D10	6618445	232,00
DC150-05-15.000D1-WJ30RE	WJ30RE	1	●	D10	7287874	239,00
DC150-05-15.100A1-WJ30RE	WJ30RE	1	●	D10	6618446	232,00
DC150-05-15.100D1-WJ30RE	WJ30RE	1	●	D10	7287875	239,00
DC150-05-15.200A1-WJ30RE	WJ30RE	1	●	D10	6618447	232,00
DC150-05-15.200D1-WJ30RE	WJ30RE	1	●	D10	7287876	239,00
DC150-05-15.300A1-WJ30RE	WJ30RE	1	●	D10	6618449	232,00
DC150-05-15.300D1-WJ30RE	WJ30RE	1	●	D10	7287877	239,00
DC150-05-15.500A0-WJ30TA	WJ30TA	1	●	D10	7462184	193,00
DC150-05-15.500A1-WJ30RE	WJ30RE	1	●	D10	6618450	232,00
DC150-05-15.500D1-WJ30RE	WJ30RE	1	●	D10	7287878	239,00
DC150-05-15.600A1-WJ30RE	WJ30RE	1	●	D10	6618451	232,00
DC150-05-15.600D1-WJ30RE	WJ30RE	1	●	D10	7287879	239,00
DC150-05-15.700A1-WJ30RE	WJ30RE	1	●	D10	6618452	232,00
DC150-05-15.700D1-WJ30RE	WJ30RE	1	●	D10	7287880	239,00
DC150-05-15.800A0-WJ30TA	WJ30TA	1	●	D10	7462185	193,00
DC150-05-15.800A1-WJ30RE	WJ30RE	1	●	D10	6618453	232,00
DC150-05-15.800D1-WJ30RE	WJ30RE	1	●	D10	7287881	239,00
DC150-05-15.875A1-WJ30RE	WJ30RE	1	●	D10	6618454	232,00
DC150-05-16.000A0-WJ30TA	WJ30TA	1	●	D10	7462186	193,00
DC150-05-16.000A1-WJ30RE	WJ30RE	1	●	D10	6618455	232,00
DC150-05-16.000D1-WJ30RE	WJ30RE	1	●	D10	7287882	239,00
DC150-05-16.100A1-WJ30RE	WJ30RE	1	●	D10	6618456	294,00

Bezeichnung / Designation	Sorte / Grade	VE / US		Disc. Gr.	Article No.	EURO Stück / piece
DC150-05-16.200A1-WJ30RE	WJ30RE	1	●	D10	6618457	294,00
DC150-05-16.300A1-WJ30RE	WJ30RE	1	●	D10	6618458	294,00
DC150-05-16.500A0-WJ30TA	WJ30TA	1	●	D10	7462187	244,00
DC150-05-16.500A1-WJ30RE	WJ30RE	1	●	D10	6618459	294,00
DC150-05-16.500D1-WJ30RE	WJ30RE	1	●	D10	7287883	302,00
DC150-05-16.600D1-WJ30RE	WJ30RE	1	●	D10	7287884	302,00
DC150-05-16.700A1-WJ30RE	WJ30RE	1	●	D10	6618460	294,00
DC150-05-16.750A1-WJ30RE	WJ30RE	1	●	D10	6618461	294,00
DC150-05-17.000A0-WJ30TA	WJ30TA	1	●	D10	7462188	244,00
DC150-05-17.000A1-WJ30RE	WJ30RE	1	●	D10	6618462	294,00
DC150-05-17.000D1-WJ30RE	WJ30RE	1	●	D10	7287885	302,00
DC150-05-17.100A1-WJ30RE	WJ30RE	1	●	D10	6618463	294,00
DC150-05-17.200A1-WJ30RE	WJ30RE	1	●	D10	6618464	294,00
DC150-05-17.200D1-WJ30RE	WJ30RE	1	●	D10	7287886	302,00
DC150-05-17.300A1-WJ30RE	WJ30RE	1	●	D10	6618465	294,00
DC150-05-17.300D1-WJ30RE	WJ30RE	1	●	D10	7287887	302,00
DC150-05-17.500A0-WJ30TA	WJ30TA	1	●	D10	7462189	244,00
DC150-05-17.500A1-WJ30RE	WJ30RE	1	●	D10	6618466	294,00
DC150-05-17.500D1-WJ30RE	WJ30RE	1	●	D10	7287888	302,00
DC150-05-17.600A1-WJ30RE	WJ30RE	1	●	D10	6618467	294,00
DC150-05-17.700A1-WJ30RE	WJ30RE	1	●	D10	6618468	294,00
DC150-05-17.700D1-WJ30RE	WJ30RE	1	●	D10	7287889	302,00
DC150-05-17.800A1-WJ30RE	WJ30RE	1	●	D10	6618469	294,00
DC150-05-17.800D1-WJ30RE	WJ30RE	1	●	D10	7287890	302,00
DC150-05-17.900A1-WJ30RE	WJ30RE	1	●	D10	6618470	294,00
DC150-05-18.000A0-WJ30TA	WJ30TA	1	●	D10	7462190	244,00
DC150-05-18.000A1-WJ30RE	WJ30RE	1	●	D10	6618471	294,00
DC150-05-18.000D1-WJ30RE	WJ30RE	1	●	D10	7287891	302,00
DC150-05-18.100D1-WJ30RE	WJ30RE	1	●	D10	7287892	366,00
DC150-05-18.500A1-WJ30RE	WJ30RE	1	●	D10	6618472	355,00
DC150-05-18.500D1-WJ30RE	WJ30RE	1	●	D10	7287893	366,00
DC150-05-18.800D1-WJ30RE	WJ30RE	1	●	D10	7287894	366,00
DC150-05-18.900A1-WJ30RE	WJ30RE	1	●	D10	6618473	355,00
DC150-05-19.000A0-WJ30TA	WJ30TA	1	●	D10	7462191	296,00
DC150-05-19.000A1-WJ30RE	WJ30RE	1	●	D10	6618474	355,00
DC150-05-19.000D1-WJ30RE	WJ30RE	1	●	D10	7287895	366,00
DC150-05-19.050A1-WJ30RE	WJ30RE	1	●	D10	6618475	355,00
DC150-05-19.300A1-WJ30RE	WJ30RE	1	●	D10	6618476	355,00
DC150-05-19.500A0-WJ30TA	WJ30TA	1	●	D10	7462192	296,00
DC150-05-19.500A1-WJ30RE	WJ30RE	1	●	D10	6618477	355,00
DC150-05-19.500D1-WJ30RE	WJ30RE	1	●	D10	7287896	366,00
DC150-05-19.700A1-WJ30RE	WJ30RE	1	●	D10	6618478	355,00
DC150-05-19.700D1-WJ30RE	WJ30RE	1	●	D10	7287897	366,00
DC150-05-19.800A1-WJ30RE	WJ30RE	1	●	D10	6618479	355,00
DC150-05-20.000A0-WJ30TA	WJ30TA	1	●	D10	7462193	296,00
DC150-05-20.000A1-WJ30RE	WJ30RE	1	●	D10	6618480	355,00
DC150-05-20.000D1-WJ30RE	WJ30RE	1	●	D10	7287898	366,00
DC150-08-03.000A1-WJ30TA	WJ30TA	1	●	D11	6618614	109,00
DC150-08-03.100A1-WJ30TA	WJ30TA	1	●	D11	6618615	109,00
DC150-08-03.175A1-WJ30TA	WJ30TA	1	●	D11	6618616	109,00
DC150-08-03.200A1-WJ30TA	WJ30TA	1	●	D11	6618617	109,00
DC150-08-03.300A1-WJ30TA	WJ30TA	1	●	D11	6618618	109,00
DC150-08-03.400A1-WJ30TA	WJ30TA	1	●	D11	6618619	109,00
DC150-08-03.500A1-WJ30TA	WJ30TA	1	●	D11	6618620	109,00
DC150-08-03.572A1-WJ30TA	WJ30TA	1	●	D11	6618621	109,00
DC150-08-03.600A1-WJ30TA	WJ30TA	1	●	D11	6618622	109,00
DC150-08-03.700A1-WJ30TA	WJ30TA	1	●	D11	6618623	109,00
DC150-08-03.800A1-WJ30TA	WJ30TA	1	●	D11	6618624	109,00
DC150-08-03.900A1-WJ30TA	WJ30TA	1	●	D11	6618625	109,00
DC150-08-03.969A1-WJ30TA	WJ30TA	1	●	D11	6618626	109,00
DC150-08-04.000A1-WJ30TA	WJ30TA	1	●	D11	6618627	109,00
DC150-08-04.100A1-WJ30TA	WJ30TA	1	●	D11	6618628	109,00
DC150-08-04.200A1-WJ30TA	WJ30TA	1	●	D11	6618629	109,00
DC150-08-04.300A1-WJ30TA	WJ30TA	1	●	D11	6618630	109,00
DC150-08-04.366A1-WJ30TA	WJ30TA	1	●	D11	6618631	109,00
DC150-08-04.400A1-WJ30TA	WJ30TA	1	●	D11	6618632	109,00
DC150-08-04.500A1-WJ30TA	WJ30TA	1	●	D11	6618633	109,00
DC150-08-04.600A1-WJ30TA	WJ30TA	1	●	D11	6618634	109,00
DC150-08-04.700A1-WJ30TA	WJ30TA	1	●	D11	6618635	109,00
DC150-08-04.763A1-WJ30TA	WJ30TA	1	●	D11	6618636	109,00

Bezeichnung / Designation	Sorte / Grade	VE / US		Disc. Gr.	Article No.	EURO Stück / piece
DC150-08-04.800A1-WJ30TA	WJ30TA	1	●	D11	6618637	109,00
DC150-08-04.900A1-WJ30TA	WJ30TA	1	●	D11	6618638	109,00
DC150-08-05.000A1-WJ30TA	WJ30TA	1	●	D11	6618639	109,00
DC150-08-05.100A1-WJ30TA	WJ30TA	1	●	D11	6618640	109,00
DC150-08-05.159A1-WJ30TA	WJ30TA	1	●	D11	6618641	109,00
DC150-08-05.200A1-WJ30TA	WJ30TA	1	●	D11	6618642	109,00
DC150-08-05.300A1-WJ30TA	WJ30TA	1	●	D11	6618643	109,00
DC150-08-05.400A1-WJ30TA	WJ30TA	1	●	D11	6618644	109,00
DC150-08-05.500A1-WJ30TA	WJ30TA	1	●	D11	6618645	109,00
DC150-08-05.556A1-WJ30TA	WJ30TA	1	●	D11	6618646	109,00
DC150-08-05.600A1-WJ30TA	WJ30TA	1	●	D11	6618647	109,00
DC150-08-05.700A1-WJ30TA	WJ30TA	1	●	D11	6618648	109,00
DC150-08-05.800A1-WJ30TA	WJ30TA	1	●	D11	6618649	109,00
DC150-08-05.900A1-WJ30TA	WJ30TA	1	●	D11	6618650	109,00
DC150-08-05.953A1-WJ30TA	WJ30TA	1	●	D11	6618651	109,00
DC150-08-06.000A1-WJ30TA	WJ30TA	1	●	D11	6618652	109,00
DC150-08-06.100A1-WJ30TA	WJ30TA	1	●	D11	6618653	131,00
DC150-08-06.200A1-WJ30TA	WJ30TA	1	●	D11	6618654	131,00
DC150-08-06.300A1-WJ30TA	WJ30TA	1	●	D11	6618655	131,00
DC150-08-06.350A1-WJ30TA	WJ30TA	1	●	D11	6618656	131,00
DC150-08-06.400A1-WJ30TA	WJ30TA	1	●	D11	6618657	131,00
DC150-08-06.500A1-WJ30TA	WJ30TA	1	●	D11	6618658	131,00
DC150-08-06.600A1-WJ30TA	WJ30TA	1	●	D11	6618659	131,00
DC150-08-06.700A1-WJ30TA	WJ30TA	1	●	D11	6618660	131,00
DC150-08-06.747A1-WJ30TA	WJ30TA	1	●	D11	6618661	131,00
DC150-08-06.800A1-WJ30TA	WJ30TA	1	●	D11	6618662	131,00
DC150-08-06.900A1-WJ30TA	WJ30TA	1	●	D11	6618663	131,00
DC150-08-07.000A1-WJ30TA	WJ30TA	1	●	D11	6618664	131,00
DC150-08-07.100A1-WJ30TA	WJ30TA	1	●	D11	6618665	131,00
DC150-08-07.144A1-WJ30TA	WJ30TA	1	●	D11	6618666	131,00
DC150-08-07.200A1-WJ30TA	WJ30TA	1	●	D11	6618667	131,00
DC150-08-07.300A1-WJ30TA	WJ30TA	1	●	D11	6618668	131,00
DC150-08-07.400A1-WJ30TA	WJ30TA	1	●	D11	6618669	131,00
DC150-08-07.500A1-WJ30TA	WJ30TA	1	●	D11	6618670	131,00
DC150-08-07.541A1-WJ30TA	WJ30TA	1	●	D11	6618671	131,00
DC150-08-07.600A1-WJ30TA	WJ30TA	1	●	D11	6618672	131,00
DC150-08-07.700A1-WJ30TA	WJ30TA	1	●	D11	6618673	131,00
DC150-08-07.800A1-WJ30TA	WJ30TA	1	●	D11	6618674	131,00
DC150-08-07.900A1-WJ30TA	WJ30TA	1	●	D11	6618675	131,00
DC150-08-07.938A1-WJ30TA	WJ30TA	1	●	D11	6618676	131,00
DC150-08-08.000A1-WJ30TA	WJ30TA	1	●	D11	6618677	131,00
DC150-08-08.100A1-WJ30TA	WJ30TA	1	●	D11	6618678	153,00
DC150-08-08.200A1-WJ30TA	WJ30TA	1	●	D11	6618679	153,00
DC150-08-08.300A1-WJ30TA	WJ30TA	1	●	D11	6618680	153,00
DC150-08-08.334A1-WJ30TA	WJ30TA	1	●	D11	6618681	153,00
DC150-08-08.400A1-WJ30TA	WJ30TA	1	●	D11	6618682	153,00
DC150-08-08.500A1-WJ30TA	WJ30TA	1	●	D11	6618683	153,00
DC150-08-08.600A1-WJ30TA	WJ30TA	1	●	D11	6618684	153,00
DC150-08-08.700A1-WJ30TA	WJ30TA	1	●	D11	6618685	153,00
DC150-08-08.731A1-WJ30TA	WJ30TA	1	●	D11	6618686	153,00
DC150-08-08.800A1-WJ30TA	WJ30TA	1	●	D11	6618687	153,00
DC150-08-08.900A1-WJ30TA	WJ30TA	1	●	D11	6618688	153,00
DC150-08-09.000A1-WJ30TA	WJ30TA	1	●	D11	6618689	153,00
DC150-08-09.100A1-WJ30TA	WJ30TA	1	●	D11	6618690	153,00
DC150-08-09.128A1-WJ30TA	WJ30TA	1	●	D11	6618691	153,00
DC150-08-09.200A1-WJ30TA	WJ30TA	1	●	D11	6618692	153,00
DC150-08-09.300A1-WJ30TA	WJ30TA	1	●	D11	6618693	153,00
DC150-08-09.400A1-WJ30TA	WJ30TA	1	●	D11	6618694	153,00
DC150-08-09.500A1-WJ30TA	WJ30TA	1	●	D11	6618695	153,00
DC150-08-09.525A1-WJ30TA	WJ30TA	1	●	D11	6618696	153,00
DC150-08-09.600A1-WJ30TA	WJ30TA	1	●	D11	6618697	153,00
DC150-08-09.700A1-WJ30TA	WJ30TA	1	●	D11	6618698	153,00
DC150-08-09.800A1-WJ30TA	WJ30TA	1	●	D11	6618699	153,00
DC150-08-09.900A1-WJ30TA	WJ30TA	1	●	D11	6618700	153,00
DC150-08-09.922A1-WJ30TA	WJ30TA	1	●	D11	6618701	153,00
DC150-08-10.000A1-WJ30TA	WJ30TA	1	●	D11	6618702	153,00
DC150-08-10.100A1-WJ30TA	WJ30TA	1	●	D11	6618703	208,00
DC150-08-10.200A1-WJ30TA	WJ30TA	1	●	D11	6618704	208,00
DC150-08-10.300A1-WJ30TA	WJ30TA	1	●	D11	6618705	208,00
DC150-08-10.319A1-WJ30TA	WJ30TA	1	●	D11	6618706	208,00

Bezeichnung / Designation	Sorte / Grade	VE / US		Disc. Gr.	Article No.	EURO Stück / piece
DC150-08-10.400A1-WJ30TA	WJ30TA	1	●	D11	6618707	208,00
DC150-08-10.500A1-WJ30TA	WJ30TA	1	●	D11	6618708	208,00
DC150-08-10.700A1-WJ30TA	WJ30TA	1	●	D11	6618709	208,00
DC150-08-10.716A1-WJ30TA	WJ30TA	1	●	D11	6618710	208,00
DC150-08-10.800A1-WJ30TA	WJ30TA	1	●	D11	6618711	208,00
DC150-08-10.900A1-WJ30TA	WJ30TA	1	●	D11	6618712	208,00
DC150-08-11.000A1-WJ30TA	WJ30TA	1	●	D11	6618713	208,00
DC150-08-11.100A1-WJ30TA	WJ30TA	1	●	D11	6618714	208,00
DC150-08-11.113A1-WJ30TA	WJ30TA	1	●	D11	6618715	208,00
DC150-08-11.200A1-WJ30TA	WJ30TA	1	●	D11	6618716	208,00
DC150-08-11.300A1-WJ30TA	WJ30TA	1	●	D11	6618717	208,00
DC150-08-11.500A1-WJ30TA	WJ30TA	1	●	D11	6618718	208,00
DC150-08-11.600A1-WJ30TA	WJ30TA	1	●	D11	6618719	208,00
DC150-08-11.700A1-WJ30TA	WJ30TA	1	●	D11	6618720	208,00
DC150-08-11.800A1-WJ30TA	WJ30TA	1	●	D11	6618721	208,00
DC150-08-11.900A1-WJ30TA	WJ30TA	1	●	D11	6618722	208,00
DC150-08-11.906A1-WJ30TA	WJ30TA	1	●	D11	6618723	208,00
DC150-08-12.000A1-WJ30TA	WJ30TA	1	●	D11	6618724	208,00
DC150-08-12.303A1-WJ30TA	WJ30TA	1	●	D11	6618725	284,00
DC150-08-12.500A1-WJ30TA	WJ30TA	1	●	D11	6618726	284,00
DC150-08-12.700A1-WJ30TA	WJ30TA	1	●	D11	6618727	284,00
DC150-08-13.000A1-WJ30TA	WJ30TA	1	●	D11	6618728	284,00
DC150-08-13.494A1-WJ30TA	WJ30TA	1	●	D11	6618729	284,00
DC150-08-13.500A1-WJ30TA	WJ30TA	1	●	D11	6618730	284,00
DC150-08-14.000A1-WJ30TA	WJ30TA	1	●	D11	6618731	284,00
DC150-08-14.288A1-WJ30TA	WJ30TA	1	●	D11	6618732	371,00
DC150-08-14.500A1-WJ30TA	WJ30TA	1	●	D11	6618733	371,00
DC150-08-15.000A1-WJ30TA	WJ30TA	1	●	D11	6618734	371,00
DC150-08-15.500A1-WJ30TA	WJ30TA	1	●	D11	6618735	371,00
DC150-08-15.875A1-WJ30TA	WJ30TA	1	●	D11	6618736	371,00
DC150-08-16.000A1-WJ30TA	WJ30TA	1	●	D11	6618737	371,00
DC150-08-16.500A1-WJ30TA	WJ30TA	1	●	D11	6618738	470,00
DC150-08-17.000A1-WJ30TA	WJ30TA	1	●	D11	6618739	470,00
DC150-08-17.500A1-WJ30TA	WJ30TA	1	●	D11	6618740	470,00
DC150-08-18.000A1-WJ30TA	WJ30TA	1	●	D11	6618741	470,00
DC150-08-18.500A1-WJ30TA	WJ30TA	1	●	D11	6618742	568,00
DC150-08-19.000A1-WJ30TA	WJ30TA	1	●	D11	6618743	568,00
DC150-08-19.050A1-WJ30TA	WJ30TA	1	●	D11	6618744	568,00
DC150-08-19.500A1-WJ30TA	WJ30TA	1	●	D11	6618745	568,00
DC150-08-20.000A1-WJ30TA	WJ30TA	1	●	D11	6618746	568,00
DC150-12-03.000A1-WJ30TA	WJ30TA	1	●	D11	6618747	126,00
DC150-12-03.100A1-WJ30TA	WJ30TA	1	●	D11	6618748	126,00
DC150-12-03.175A1-WJ30TA	WJ30TA	1	●	D11	6618749	126,00
DC150-12-03.200A1-WJ30TA	WJ30TA	1	●	D11	6618750	126,00
DC150-12-03.300A1-WJ30TA	WJ30TA	1	●	D11	6618751	126,00
DC150-12-03.400A1-WJ30TA	WJ30TA	1	●	D11	6618752	126,00
DC150-12-03.500A1-WJ30TA	WJ30TA	1	●	D11	6618753	126,00
DC150-12-03.572A1-WJ30TA	WJ30TA	1	●	D11	6618754	126,00
DC150-12-03.600A1-WJ30TA	WJ30TA	1	●	D11	6618755	126,00
DC150-12-03.700A1-WJ30TA	WJ30TA	1	●	D11	6618756	126,00
DC150-12-03.800A1-WJ30TA	WJ30TA	1	●	D11	6618757	126,00
DC150-12-03.900A1-WJ30TA	WJ30TA	1	●	D11	6618758	126,00
DC150-12-03.969A1-WJ30TA	WJ30TA	1	●	D11	6618759	126,00
DC150-12-04.000A1-WJ30TA	WJ30TA	1	●	D11	6618760	126,00
DC150-12-04.100A1-WJ30TA	WJ30TA	1	●	D11	6618761	126,00
DC150-12-04.200A1-WJ30TA	WJ30TA	1	●	D11	6618762	126,00
DC150-12-04.300A1-WJ30TA	WJ30TA	1	●	D11	6618763	126,00
DC150-12-04.366A1-WJ30TA	WJ30TA	1	●	D11	6618764	126,00
DC150-12-04.400A1-WJ30TA	WJ30TA	1	●	D11	6618765	126,00
DC150-12-04.500A1-WJ30TA	WJ30TA	1	●	D11	6618766	126,00
DC150-12-04.600A1-WJ30TA	WJ30TA	1	●	D11	6618767	126,00
DC150-12-04.700A1-WJ30TA	WJ30TA	1	●	D11	6618768	126,00
DC150-12-04.763A1-WJ30TA	WJ30TA	1	●	D11	6618769	126,00
DC150-12-04.800A1-WJ30TA	WJ30TA	1	●	D11	6618770	126,00
DC150-12-04.900A1-WJ30TA	WJ30TA	1	●	D11	6618771	126,00
DC150-12-05.000A1-WJ30TA	WJ30TA	1	●	D11	6618772	126,00
DC150-12-05.100A1-WJ30TA	WJ30TA	1	●	D11	6618773	126,00
DC150-12-05.159A1-WJ30TA	WJ30TA	1	●	D11	6618774	126,00
DC150-12-05.200A1-WJ30TA	WJ30TA	1	●	D11	6618775	126,00
DC150-12-05.300A1-WJ30TA	WJ30TA	1	●	D11	6618776	126,00

Bezeichnung / Designation	Sorte / Grade	VE / US		Disc. Gr.	Article No.	EURO Stück / piece
DC150-12-05.400A1-WJ30TA	WJ30TA	1	●	D11	6618777	126,00
DC150-12-05.500A1-WJ30TA	WJ30TA	1	●	D11	6618778	126,00
DC150-12-05.550A1-WJ30TA	WJ30TA	1	●	D11	6618779	126,00
DC150-12-05.556A1-WJ30TA	WJ30TA	1	●	D11	6618780	126,00
DC150-12-05.600A1-WJ30TA	WJ30TA	1	●	D11	6618781	126,00
DC150-12-05.700A1-WJ30TA	WJ30TA	1	●	D11	6618782	126,00
DC150-12-05.800A1-WJ30TA	WJ30TA	1	●	D11	6618783	126,00
DC150-12-05.900A1-WJ30TA	WJ30TA	1	●	D11	6618784	126,00
DC150-12-06.000A1-WJ30TA	WJ30TA	1	●	D11	6618785	126,00
DC150-12-06.100A1-WJ30TA	WJ30TA	1	●	D11	6618786	152,00
DC150-12-06.200A1-WJ30TA	WJ30TA	1	●	D11	6618787	152,00
DC150-12-06.300A1-WJ30TA	WJ30TA	1	●	D11	6618788	152,00
DC150-12-06.350A1-WJ30TA	WJ30TA	1	●	D11	6618789	152,00
DC150-12-06.400A1-WJ30TA	WJ30TA	1	●	D11	6618790	152,00
DC150-12-06.500A1-WJ30TA	WJ30TA	1	●	D11	6618791	152,00
DC150-12-06.600A1-WJ30TA	WJ30TA	1	●	D11	6618792	152,00
DC150-12-06.700A1-WJ30TA	WJ30TA	1	●	D11	6618793	152,00
DC150-12-06.747A1-WJ30TA	WJ30TA	1	●	D11	6618794	152,00
DC150-12-06.800A1-WJ30TA	WJ30TA	1	●	D11	6618795	152,00
DC150-12-06.900A1-WJ30TA	WJ30TA	1	●	D11	6618796	152,00
DC150-12-07.000A1-WJ30TA	WJ30TA	1	●	D11	6618797	152,00
DC150-12-07.100A1-WJ30TA	WJ30TA	1	●	D11	6618798	152,00
DC150-12-07.144A1-WJ30TA	WJ30TA	1	●	D11	6618799	152,00
DC150-12-07.200A1-WJ30TA	WJ30TA	1	●	D11	6618800	152,00
DC150-12-07.300A1-WJ30TA	WJ30TA	1	●	D11	6618801	152,00
DC150-12-07.400A1-WJ30TA	WJ30TA	1	●	D11	6618802	152,00
DC150-12-07.500A1-WJ30TA	WJ30TA	1	●	D11	6618803	152,00
DC150-12-07.541A1-WJ30TA	WJ30TA	1	●	D11	6618804	152,00
DC150-12-07.800A1-WJ30TA	WJ30TA	1	●	D11	6618805	152,00
DC150-12-07.900A1-WJ30TA	WJ30TA	1	●	D11	6618806	152,00
DC150-12-07.938A1-WJ30TA	WJ30TA	1	●	D11	6618807	152,00
DC150-12-08.000A1-WJ30TA	WJ30TA	1	●	D11	6618808	152,00
DC150-12-08.100A1-WJ30TA	WJ30TA	1	●	D11	6618809	177,00
DC150-12-08.200A1-WJ30TA	WJ30TA	1	●	D11	6618810	177,00
DC150-12-08.300A1-WJ30TA	WJ30TA	1	●	D11	6618811	177,00
DC150-12-08.400A1-WJ30TA	WJ30TA	1	●	D11	6618812	177,00
DC150-12-08.500A1-WJ30TA	WJ30TA	1	●	D11	6618813	177,00
DC150-12-08.600A1-WJ30TA	WJ30TA	1	●	D11	6618814	177,00
DC150-12-08.700A1-WJ30TA	WJ30TA	1	●	D11	6618815	177,00
DC150-12-08.731A1-WJ30TA	WJ30TA	1	●	D11	6618816	177,00
DC150-12-08.800A1-WJ30TA	WJ30TA	1	●	D11	6618817	177,00
DC150-12-09.000A1-WJ30TA	WJ30TA	1	●	D11	6618818	177,00
DC150-12-09.128A1-WJ30TA	WJ30TA	1	●	D11	6618819	177,00
DC150-12-09.200A1-WJ30TA	WJ30TA	1	●	D11	6618820	177,00
DC150-12-09.300A1-WJ30TA	WJ30TA	1	●	D11	6618821	177,00
DC150-12-09.500A1-WJ30TA	WJ30TA	1	●	D11	6618822	177,00
DC150-12-09.525A1-WJ30TA	WJ30TA	1	●	D11	6618823	177,00
DC150-12-09.600A1-WJ30TA	WJ30TA	1	●	D11	6618824	177,00
DC150-12-09.700A1-WJ30TA	WJ30TA	1	●	D11	6618825	177,00
DC150-12-09.800A1-WJ30TA	WJ30TA	1	●	D11	6618826	177,00
DC150-12-09.922A1-WJ30TA	WJ30TA	1	●	D11	6618827	177,00
DC150-12-10.000A1-WJ30TA	WJ30TA	1	●	D11	6618828	177,00
DC150-12-10.100A1-WJ30TA	WJ30TA	1	●	D11	6618829	240,00
DC150-12-10.200A1-WJ30TA	WJ30TA	1	●	D11	6618830	240,00
DC150-12-10.300A1-WJ30TA	WJ30TA	1	●	D11	6618831	240,00
DC150-12-10.319A1-WJ30TA	WJ30TA	1	●	D11	6618832	240,00
DC150-12-10.500A1-WJ30TA	WJ30TA	1	●	D11	6618833	240,00
DC150-12-10.716A1-WJ30TA	WJ30TA	1	●	D11	6618834	240,00
DC150-12-10.800A1-WJ30TA	WJ30TA	1	●	D11	6618835	240,00
DC150-12-11.000A1-WJ30TA	WJ30TA	1	●	D11	6618836	240,00
DC150-12-11.100A1-WJ30TA	WJ30TA	1	●	D11	6618837	240,00
DC150-12-11.113A1-WJ30TA	WJ30TA	1	●	D11	6618838	240,00
DC150-12-11.200A1-WJ30TA	WJ30TA	1	●	D11	6618839	240,00
DC150-12-11.500A1-WJ30TA	WJ30TA	1	●	D11	6618840	240,00
DC150-12-11.509A1-WJ30TA	WJ30TA	1	●	D11	6618841	240,00
DC150-12-11.700A1-WJ30TA	WJ30TA	1	●	D11	6618842	240,00
DC150-12-11.800A1-WJ30TA	WJ30TA	1	●	D11	6618843	240,00
DC150-12-11.906A1-WJ30TA	WJ30TA	1	●	D11	6618844	240,00
DC150-12-12.000A1-WJ30TA	WJ30TA	1	●	D11	6618845	240,00
DC150-12-12.100A1-WJ30TA	WJ30TA	1	●	D11	6618846	328,00

Bezeichnung / Designation	Sorte / Grade	VE / US		Disc. Gr.	Article No.	EURO Stück / piece
DC150-12-12.200A1-WJ30TA	WJ30TA	1	●	D11	6618847	328,00
DC150-12-12.300A1-WJ30TA	WJ30TA	1	●	D11	6618848	328,00
DC150-12-12.303A1-WJ30TA	WJ30TA	1	●	D11	6618849	328,00
DC150-12-12.500A1-WJ30TA	WJ30TA	1	●	D11	6618850	328,00
DC150-12-12.600A1-WJ30TA	WJ30TA	1	●	D11	6618851	328,00
DC150-12-12.700A1-WJ30TA	WJ30TA	1	●	D11	6618852	328,00
DC150-12-13.000A1-WJ30TA	WJ30TA	1	●	D11	6618853	328,00
DC150-12-13.494A1-WJ30TA	WJ30TA	1	●	D11	6618854	328,00
DC150-12-13.500A1-WJ30TA	WJ30TA	1	●	D11	6618855	328,00
DC150-12-14.000A1-WJ30TA	WJ30TA	1	●	D11	6618856	328,00
DC150-12-14.288A1-WJ30TA	WJ30TA	1	●	D11	6618857	429,00
DC150-12-14.500A1-WJ30TA	WJ30TA	1	●	D11	6618859	429,00
DC150-12-15.000A1-WJ30TA	WJ30TA	1	●	D11	6618860	429,00
DC150-12-15.500A1-WJ30TA	WJ30TA	1	●	D11	6618858	429,00
DC150-12-15.875A1-WJ30TA	WJ30TA	1	●	D11	6618861	429,00
DC150-12-16.000A1-WJ30TA	WJ30TA	1	●	D11	6618862	429,00
DC150-12-16.500A1-WJ30TA	WJ30TA	1	●	D11	6618863	543,00
DC150-12-17.000A1-WJ30TA	WJ30TA	1	●	D11	6618864	543,00
DC150-12-17.500A1-WJ30TA	WJ30TA	1	●	D11	6618865	543,00
DC150-12-18.000A1-WJ30TA	WJ30TA	1	●	D11	6618866	543,00
DC150-12-19.000A1-WJ30TA	WJ30TA	1	●	D11	6618867	657,00
DC150-12-20.000A1-WJ30TA	WJ30TA	1	●	D11	6618868	657,00
DC160-03-03.000A0-WJ30ET	WJ30ET	1	●	D20	7377036	75,80
DC160-03-03.000A1-WJ30ET	WJ30ET	1	●	D20	7378053	91,00
DC160-03-03.000F0-WJ30ET	WJ30ET	1	○	D20	7377037	78,10
DC160-03-03.000F1-WJ30ET	WJ30ET	1	●	D20	7378054	93,70
DC160-03-03.100A0-WJ30ET	WJ30ET	1	●	D20	7377038	75,80
DC160-03-03.100A1-WJ30ET	WJ30ET	1	●	D20	7378055	91,00
DC160-03-03.100F0-WJ30ET	WJ30ET	1	○	D20	7377039	78,10
DC160-03-03.100F1-WJ30ET	WJ30ET	1	○	D20	7378056	93,70
DC160-03-03.175A0-WJ30ET	WJ30ET	1	●	D20	7377050	75,80
DC160-03-03.175A1-WJ30ET	WJ30ET	1	●	D20	7378057	91,00
DC160-03-03.200A0-WJ30ET	WJ30ET	1	●	D20	7377051	75,80
DC160-03-03.200A1-WJ30ET	WJ30ET	1	●	D20	7378058	91,00
DC160-03-03.200F0-WJ30ET	WJ30ET	1	○	D20	7377052	78,10
DC160-03-03.200F1-WJ30ET	WJ30ET	1	○	D20	7378059	93,70
DC160-03-03.250A0-WJ30ET	WJ30ET	1	●	D20	7377053	75,80
DC160-03-03.250A1-WJ30ET	WJ30ET	1	●	D20	7378070	91,00
DC160-03-03.250F0-WJ30ET	WJ30ET	1	○	D20	7377054	78,10
DC160-03-03.250F1-WJ30ET	WJ30ET	1	○	D20	7378071	93,70
DC160-03-03.300A0-WJ30ET	WJ30ET	1	●	D20	7377055	75,80
DC160-03-03.300A1-WJ30ET	WJ30ET	1	●	D20	7378072	91,00
DC160-03-03.300F0-WJ30ET	WJ30ET	1	○	D20	7377056	78,10
DC160-03-03.300F1-WJ30ET	WJ30ET	1	○	D20	7378073	93,70
DC160-03-03.400A0-WJ30ET	WJ30ET	1	●	D20	7377057	75,80
DC160-03-03.400A1-WJ30ET	WJ30ET	1	●	D20	7378074	91,00
DC160-03-03.400F0-WJ30ET	WJ30ET	1	○	D20	7377058	78,10
DC160-03-03.400F1-WJ30ET	WJ30ET	1	○	D20	7378075	93,70
DC160-03-03.500A0-WJ30ET	WJ30ET	1	●	D20	7377059	75,80
DC160-03-03.500A1-WJ30ET	WJ30ET	1	●	D20	7378076	91,00
DC160-03-03.500F0-WJ30ET	WJ30ET	1	○	D20	7377060	78,10
DC160-03-03.500F1-WJ30ET	WJ30ET	1	○	D20	7378077	93,70
DC160-03-03.572A0-WJ30ET	WJ30ET	1	●	D20	7377061	75,80
DC160-03-03.572A1-WJ30ET	WJ30ET	1	●	D20	7378078	91,00
DC160-03-03.600A0-WJ30ET	WJ30ET	1	●	D20	7377062	75,80
DC160-03-03.600A1-WJ30ET	WJ30ET	1	●	D20	7378079	91,00
DC160-03-03.600F0-WJ30ET	WJ30ET	1	○	D20	7377063	78,10
DC160-03-03.600F1-WJ30ET	WJ30ET	1	○	D20	7378080	93,70
DC160-03-03.650A0-WJ30ET	WJ30ET	1	●	D20	7377064	75,80
DC160-03-03.650A1-WJ30ET	WJ30ET	1	●	D20	7378081	91,00
DC160-03-03.650F0-WJ30ET	WJ30ET	1	○	D20	7377065	78,10
DC160-03-03.650F1-WJ30ET	WJ30ET	1	○	D20	7378082	93,70
DC160-03-03.700A0-WJ30ET	WJ30ET	1	●	D20	7377066	75,80
DC160-03-03.700A1-WJ30ET	WJ30ET	1	●	D20	7378083	91,00
DC160-03-03.700F0-WJ30ET	WJ30ET	1	○	D20	7377067	78,10
DC160-03-03.700F1-WJ30ET	WJ30ET	1	○	D20	7378084	93,70
DC160-03-03.800A0-WJ30ET	WJ30ET	1	●	D20	7377068	75,80
DC160-03-03.800A1-WJ30ET	WJ30ET	1	●	D20	7378085	91,00
DC160-03-03.800F0-WJ30ET	WJ30ET	1	○	D20	7377069	78,10
DC160-03-03.800F1-WJ30ET	WJ30ET	1	○	D20	7378086	93,70

Bezeichnung / Designation	Sorte / Grade	VE / US		Disc. Gr.	Article No.	EURO Stück / piece
DC160-03-03.900A0-WJ30ET	WJ30ET	1	●	D20	7377070	75,80
DC160-03-03.900A1-WJ30ET	WJ30ET	1	●	D20	7378087	91,00
DC160-03-03.900F0-WJ30ET	WJ30ET	1	○	D20	7377071	78,10
DC160-03-03.900F1-WJ30ET	WJ30ET	1	○	D20	7378088	93,70
DC160-03-03.969A0-WJ30ET	WJ30ET	1	●	D20	7377072	75,80
DC160-03-03.969A1-WJ30ET	WJ30ET	1	●	D20	7378089	91,00
DC160-03-04.000A0-WJ30ET	WJ30ET	1	●	D20	7377073	75,80
DC160-03-04.000A1-WJ30ET	WJ30ET	1	●	D20	7378090	91,00
DC160-03-04.000F0-WJ30ET	WJ30ET	1	○	D20	7377074	78,10
DC160-03-04.000F1-WJ30ET	WJ30ET	1	●	D20	7378091	93,70
DC160-03-04.100A0-WJ30ET	WJ30ET	1	●	D20	7377075	75,80
DC160-03-04.100A1-WJ30ET	WJ30ET	1	●	D20	7378092	91,00
DC160-03-04.100F0-WJ30ET	WJ30ET	1	○	D20	7377076	78,10
DC160-03-04.100F1-WJ30ET	WJ30ET	1	○	D20	7378093	93,70
DC160-03-04.200A0-WJ30ET	WJ30ET	1	●	D20	7377077	75,80
DC160-03-04.200A1-WJ30ET	WJ30ET	1	●	D20	7378094	91,00
DC160-03-04.200F0-WJ30ET	WJ30ET	1	●	D20	7377078	78,10
DC160-03-04.200F1-WJ30ET	WJ30ET	1	●	D20	7378095	93,70
DC160-03-04.300A0-WJ30ET	WJ30ET	1	●	D20	7377079	75,80
DC160-03-04.300A1-WJ30ET	WJ30ET	1	●	D20	7378096	91,00
DC160-03-04.300F0-WJ30ET	WJ30ET	1	○	D20	7377080	78,10
DC160-03-04.300F1-WJ30ET	WJ30ET	1	●	D20	7378097	93,70
DC160-03-04.366A0-WJ30ET	WJ30ET	1	●	D20	7377081	75,80
DC160-03-04.366A1-WJ30ET	WJ30ET	1	●	D20	7378098	91,00
DC160-03-04.400A0-WJ30ET	WJ30ET	1	●	D20	7377082	75,80
DC160-03-04.400A1-WJ30ET	WJ30ET	1	●	D20	7378099	91,00
DC160-03-04.400F0-WJ30ET	WJ30ET	1	○	D20	7377083	78,10
DC160-03-04.400F1-WJ30ET	WJ30ET	1	○	D20	7378100	93,70
DC160-03-04.500A0-WJ30ET	WJ30ET	1	●	D20	7377084	75,80
DC160-03-04.500A1-WJ30ET	WJ30ET	1	●	D20	7378101	91,00
DC160-03-04.500F0-WJ30ET	WJ30ET	1	○	D20	7377085	78,10
DC160-03-04.500F1-WJ30ET	WJ30ET	1	○	D20	7378102	93,70
DC160-03-04.600A0-WJ30ET	WJ30ET	1	●	D20	7377086	75,80
DC160-03-04.600A1-WJ30ET	WJ30ET	1	●	D20	7378103	91,00
DC160-03-04.600F0-WJ30ET	WJ30ET	1	○	D20	7377087	78,10
DC160-03-04.600F1-WJ30ET	WJ30ET	1	○	D20	7378104	93,70
DC160-03-04.650A0-WJ30ET	WJ30ET	1	●	D20	7377088	75,80
DC160-03-04.650A1-WJ30ET	WJ30ET	1	●	D20	7378105	91,00
DC160-03-04.650F0-WJ30ET	WJ30ET	1	○	D20	7377089	78,10
DC160-03-04.650F1-WJ30ET	WJ30ET	1	○	D20	7378106	93,70
DC160-03-04.700A0-WJ30ET	WJ30ET	1	●	D20	7377090	75,80
DC160-03-04.700A1-WJ30ET	WJ30ET	1	●	D20	7378107	91,00
DC160-03-04.700F0-WJ30ET	WJ30ET	1	○	D20	7377091	78,10
DC160-03-04.700F1-WJ30ET	WJ30ET	1	○	D20	7378108	93,70
DC160-03-04.763A0-WJ30ET	WJ30ET	1	●	D20	7377092	75,80
DC160-03-04.763A1-WJ30ET	WJ30ET	1	●	D20	7378109	91,00
DC160-03-04.800A0-WJ30ET	WJ30ET	1	●	D20	7377093	75,80
DC160-03-04.800A1-WJ30ET	WJ30ET	1	●	D20	7378110	91,00
DC160-03-04.800F0-WJ30ET	WJ30ET	1	○	D20	7377094	78,10
DC160-03-04.800F1-WJ30ET	WJ30ET	1	○	D20	7378111	93,70
DC160-03-04.900A0-WJ30ET	WJ30ET	1	●	D20	7377095	75,80
DC160-03-04.900A1-WJ30ET	WJ30ET	1	●	D20	7378112	91,00
DC160-03-04.900F0-WJ30ET	WJ30ET	1	○	D20	7377096	78,10
DC160-03-04.900F1-WJ30ET	WJ30ET	1	○	D20	7378113	93,70
DC160-03-05.000A0-WJ30ET	WJ30ET	1	●	D20	7377097	75,80
DC160-03-05.000A1-WJ30ET	WJ30ET	1	●	D20	7378114	91,00
DC160-03-05.000F0-WJ30ET	WJ30ET	1	●	D20	7377098	78,10
DC160-03-05.000F1-WJ30ET	WJ30ET	1	●	D20	7378115	93,70
DC160-03-05.100A0-WJ30ET	WJ30ET	1	●	D20	7377099	75,80
DC160-03-05.100A1-WJ30ET	WJ30ET	1	●	D20	7378116	91,00
DC160-03-05.100F0-WJ30ET	WJ30ET	1	○	D20	7377100	78,10
DC160-03-05.100F1-WJ30ET	WJ30ET	1	●	D20	7378117	93,70
DC160-03-05.159A0-WJ30ET	WJ30ET	1	●	D20	7377101	75,80
DC160-03-05.159A1-WJ30ET	WJ30ET	1	●	D20	7378118	91,00
DC160-03-05.200A0-WJ30ET	WJ30ET	1	●	D20	7377102	75,80
DC160-03-05.200A1-WJ30ET	WJ30ET	1	●	D20	7378119	91,00
DC160-03-05.200F0-WJ30ET	WJ30ET	1	○	D20	7377103	78,10
DC160-03-05.200F1-WJ30ET	WJ30ET	1	○	D20	7378120	93,70
DC160-03-05.300A0-WJ30ET	WJ30ET	1	●	D20	7377104	75,80
DC160-03-05.300A1-WJ30ET	WJ30ET	1	●	D20	7378121	91,00

Bezeichnung / Designation	Sorte / Grade	VE / US		Disc. Gr.	Article No.	EURO Stück / piece
DC160-03-05.300F0-WJ30ET	WJ30ET	1	○	D20	7377105	78,10
DC160-03-05.300F1-WJ30ET	WJ30ET	1	●	D20	7378122	93,70
DC160-03-05.400A0-WJ30ET	WJ30ET	1	●	D20	7377106	75,80
DC160-03-05.400A1-WJ30ET	WJ30ET	1	●	D20	7378123	91,00
DC160-03-05.400F0-WJ30ET	WJ30ET	1	○	D20	7377107	78,10
DC160-03-05.400F1-WJ30ET	WJ30ET	1	○	D20	7378124	93,70
DC160-03-05.500A0-WJ30ET	WJ30ET	1	●	D20	7377108	75,80
DC160-03-05.500A1-WJ30ET	WJ30ET	1	●	D20	7378125	91,00
DC160-03-05.500F0-WJ30ET	WJ30ET	1	○	D20	7377109	78,10
DC160-03-05.500F1-WJ30ET	WJ30ET	1	●	D20	7378126	93,70
DC160-03-05.550A0-WJ30ET	WJ30ET	1	●	D20	7377110	75,80
DC160-03-05.550A1-WJ30ET	WJ30ET	1	●	D20	7378127	91,00
DC160-03-05.550F0-WJ30ET	WJ30ET	1	○	D20	7377111	78,10
DC160-03-05.550F1-WJ30ET	WJ30ET	1	○	D20	7378128	93,70
DC160-03-05.556A0-WJ30ET	WJ30ET	1	●	D20	7377112	75,80
DC160-03-05.556A1-WJ30ET	WJ30ET	1	●	D20	7378129	91,00
DC160-03-05.600A0-WJ30ET	WJ30ET	1	●	D20	7377113	75,80
DC160-03-05.600A1-WJ30ET	WJ30ET	1	●	D20	7378130	91,00
DC160-03-05.600F0-WJ30ET	WJ30ET	1	○	D20	7377114	78,10
DC160-03-05.600F1-WJ30ET	WJ30ET	1	○	D20	7378131	93,70
DC160-03-05.700A0-WJ30ET	WJ30ET	1	●	D20	7377115	75,80
DC160-03-05.700A1-WJ30ET	WJ30ET	1	●	D20	7378132	91,00
DC160-03-05.700F0-WJ30ET	WJ30ET	1	○	D20	7377116	78,10
DC160-03-05.700F1-WJ30ET	WJ30ET	1	○	D20	7378133	93,70
DC160-03-05.800A0-WJ30ET	WJ30ET	1	●	D20	7377117	75,80
DC160-03-05.800A1-WJ30ET	WJ30ET	1	●	D20	7378134	91,00
DC160-03-05.800F0-WJ30ET	WJ30ET	1	○	D20	7377118	78,10
DC160-03-05.800F1-WJ30ET	WJ30ET	1	○	D20	7378135	93,70
DC160-03-05.900A0-WJ30ET	WJ30ET	1	●	D20	7377119	75,80
DC160-03-05.900A1-WJ30ET	WJ30ET	1	●	D20	7378136	91,00
DC160-03-05.900F0-WJ30ET	WJ30ET	1	○	D20	7377120	78,10
DC160-03-05.900F1-WJ30ET	WJ30ET	1	○	D20	7378137	93,70
DC160-03-05.953A0-WJ30ET	WJ30ET	1	●	D20	7377121	75,80
DC160-03-05.953A1-WJ30ET	WJ30ET	1	●	D20	7378138	91,00
DC160-03-06.000A0-WJ30ET	WJ30ET	1	●	D20	7377122	75,80
DC160-03-06.000A1-WJ30ET	WJ30ET	1	●	D20	7378139	91,00
DC160-03-06.000F0-WJ30ET	WJ30ET	1	○	D20	7377123	78,10
DC160-03-06.000F1-WJ30ET	WJ30ET	1	●	D20	7378140	93,70
DC160-03-06.100A0-WJ30ET	WJ30ET	1	●	D20	7377124	91,00
DC160-03-06.100A1-WJ30ET	WJ30ET	1	●	D20	7378141	109,00
DC160-03-06.100F0-WJ30ET	WJ30ET	1	○	D20	7377125	93,70
DC160-03-06.100F1-WJ30ET	WJ30ET	1	○	D20	7378142	112,00
DC160-03-06.200A0-WJ30ET	WJ30ET	1	●	D20	7377126	91,00
DC160-03-06.200A1-WJ30ET	WJ30ET	1	●	D20	7378143	109,00
DC160-03-06.200F0-WJ30ET	WJ30ET	1	○	D20	7377127	93,70
DC160-03-06.200F1-WJ30ET	WJ30ET	1	○	D20	7378144	112,00
DC160-03-06.300A0-WJ30ET	WJ30ET	1	●	D20	7377128	91,00
DC160-03-06.300A1-WJ30ET	WJ30ET	1	●	D20	7378145	109,00
DC160-03-06.300F0-WJ30ET	WJ30ET	1	○	D20	7377129	93,70
DC160-03-06.300F1-WJ30ET	WJ30ET	1	○	D20	7378146	112,00
DC160-03-06.350A0-WJ30ET	WJ30ET	1	●	D20	7377130	91,00
DC160-03-06.350A1-WJ30ET	WJ30ET	1	●	D20	7378147	109,00
DC160-03-06.400A0-WJ30ET	WJ30ET	1	●	D20	7377131	91,00
DC160-03-06.400A1-WJ30ET	WJ30ET	1	●	D20	7378148	109,00
DC160-03-06.400F0-WJ30ET	WJ30ET	1	○	D20	7377132	93,70
DC160-03-06.400F1-WJ30ET	WJ30ET	1	○	D20	7378149	112,00
DC160-03-06.500A0-WJ30ET	WJ30ET	1	●	D20	7377133	91,00
DC160-03-06.500A1-WJ30ET	WJ30ET	1	●	D20	7378150	109,00
DC160-03-06.500F0-WJ30ET	WJ30ET	1	○	D20	7377134	93,70
DC160-03-06.500F1-WJ30ET	WJ30ET	1	○	D20	7378151	112,00
DC160-03-06.600A0-WJ30ET	WJ30ET	1	●	D20	7377135	91,00
DC160-03-06.600A1-WJ30ET	WJ30ET	1	●	D20	7378152	109,00
DC160-03-06.600F0-WJ30ET	WJ30ET	1	○	D20	7377136	93,70
DC160-03-06.600F1-WJ30ET	WJ30ET	1	○	D20	7378153	112,00
DC160-03-06.700A0-WJ30ET	WJ30ET	1	●	D20	7377137	91,00
DC160-03-06.700A1-WJ30ET	WJ30ET	1	●	D20	7378154	109,00
DC160-03-06.700F0-WJ30ET	WJ30ET	1	○	D20	7377138	93,70
DC160-03-06.700F1-WJ30ET	WJ30ET	1	○	D20	7378155	112,00
DC160-03-06.747A0-WJ30ET	WJ30ET	1	●	D20	7377139	91,00
DC160-03-06.747A1-WJ30ET	WJ30ET	1	●	D20	7378156	109,00

Bezeichnung / Designation	Sorte / Grade	VE / US		Disc. Gr.	Article No.	EURO Stück / piece
DC160-03-06.800A0-WJ30ET	WJ30ET	1	●	D20	7377140	91,00
DC160-03-06.800A1-WJ30ET	WJ30ET	1	●	D20	7378157	109,00
DC160-03-06.800F0-WJ30ET	WJ30ET	1	○	D20	7377141	93,70
DC160-03-06.800F1-WJ30ET	WJ30ET	1	○	D20	7378158	112,00
DC160-03-06.900A0-WJ30ET	WJ30ET	1	●	D20	7377142	91,00
DC160-03-06.900A1-WJ30ET	WJ30ET	1	●	D20	7378159	109,00
DC160-03-06.900F0-WJ30ET	WJ30ET	1	○	D20	7377143	93,70
DC160-03-06.900F1-WJ30ET	WJ30ET	1	○	D20	7378160	112,00
DC160-03-07.000A0-WJ30ET	WJ30ET	1	●	D20	7377144	91,00
DC160-03-07.000A1-WJ30ET	WJ30ET	1	●	D20	7378161	109,00
DC160-03-07.000F0-WJ30ET	WJ30ET	1	○	D20	7377145	93,70
DC160-03-07.000F1-WJ30ET	WJ30ET	1	○	D20	7378162	112,00
DC160-03-07.100A0-WJ30ET	WJ30ET	1	●	D20	7377146	91,00
DC160-03-07.100A1-WJ30ET	WJ30ET	1	●	D20	7378163	109,00
DC160-03-07.100F0-WJ30ET	WJ30ET	1	○	D20	7377147	93,70
DC160-03-07.100F1-WJ30ET	WJ30ET	1	○	D20	7378164	112,00
DC160-03-07.144A0-WJ30ET	WJ30ET	1	●	D20	7377148	91,00
DC160-03-07.144A1-WJ30ET	WJ30ET	1	●	D20	7378165	109,00
DC160-03-07.200A0-WJ30ET	WJ30ET	1	●	D20	7377149	91,00
DC160-03-07.200A1-WJ30ET	WJ30ET	1	●	D20	7378166	109,00
DC160-03-07.200F0-WJ30ET	WJ30ET	1	○	D20	7377150	93,70
DC160-03-07.200F1-WJ30ET	WJ30ET	1	○	D20	7378167	112,00
DC160-03-07.300A0-WJ30ET	WJ30ET	1	●	D20	7377151	91,00
DC160-03-07.300A1-WJ30ET	WJ30ET	1	●	D20	7378168	109,00
DC160-03-07.300F0-WJ30ET	WJ30ET	1	○	D20	7377152	93,70
DC160-03-07.300F1-WJ30ET	WJ30ET	1	○	D20	7378169	112,00
DC160-03-07.400A0-WJ30ET	WJ30ET	1	●	D20	7377153	91,00
DC160-03-07.400A1-WJ30ET	WJ30ET	1	●	D20	7378170	109,00
DC160-03-07.400F0-WJ30ET	WJ30ET	1	○	D20	7377154	93,70
DC160-03-07.400F1-WJ30ET	WJ30ET	1	○	D20	7378171	112,00
DC160-03-07.500A0-WJ30ET	WJ30ET	1	●	D20	7377155	91,00
DC160-03-07.500A1-WJ30ET	WJ30ET	1	●	D20	7378172	109,00
DC160-03-07.500F0-WJ30ET	WJ30ET	1	○	D20	7377156	93,70
DC160-03-07.500F1-WJ30ET	WJ30ET	1	○	D20	7378173	112,00
DC160-03-07.541A0-WJ30ET	WJ30ET	1	●	D20	7377157	91,00
DC160-03-07.541A1-WJ30ET	WJ30ET	1	●	D20	7378174	109,00
DC160-03-07.550A0-WJ30ET	WJ30ET	1	●	D20	7377158	91,00
DC160-03-07.550A1-WJ30ET	WJ30ET	1	●	D20	7378175	109,00
DC160-03-07.550F0-WJ30ET	WJ30ET	1	○	D20	7377159	93,70
DC160-03-07.550F1-WJ30ET	WJ30ET	1	○	D20	7378176	112,00
DC160-03-07.600A0-WJ30ET	WJ30ET	1	●	D20	7377160	91,00
DC160-03-07.600A1-WJ30ET	WJ30ET	1	●	D20	7378177	109,00
DC160-03-07.600F0-WJ30ET	WJ30ET	1	○	D20	7377161	93,70
DC160-03-07.600F1-WJ30ET	WJ30ET	1	○	D20	7378178	112,00
DC160-03-07.700A0-WJ30ET	WJ30ET	1	●	D20	7377162	91,00
DC160-03-07.700A1-WJ30ET	WJ30ET	1	●	D20	7378179	109,00
DC160-03-07.700F0-WJ30ET	WJ30ET	1	○	D20	7377163	93,70
DC160-03-07.700F1-WJ30ET	WJ30ET	1	○	D20	7378180	112,00
DC160-03-07.800A0-WJ30ET	WJ30ET	1	●	D20	7377164	91,00
DC160-03-07.800A1-WJ30ET	WJ30ET	1	●	D20	7378181	109,00
DC160-03-07.800F0-WJ30ET	WJ30ET	1	○	D20	7377165	93,70
DC160-03-07.800F1-WJ30ET	WJ30ET	1	○	D20	7378182	112,00
DC160-03-07.900A0-WJ30ET	WJ30ET	1	●	D20	7377166	91,00
DC160-03-07.900A1-WJ30ET	WJ30ET	1	●	D20	7378183	109,00
DC160-03-07.900F0-WJ30ET	WJ30ET	1	○	D20	7377167	93,70
DC160-03-07.900F1-WJ30ET	WJ30ET	1	○	D20	7378184	112,00
DC160-03-07.938A0-WJ30ET	WJ30ET	1	●	D20	7377168	91,00
DC160-03-07.938A1-WJ30ET	WJ30ET	1	●	D20	7378185	109,00
DC160-03-08.000A0-WJ30ET	WJ30ET	1	●	D20	7377169	91,00
DC160-03-08.000A1-WJ30ET	WJ30ET	1	●	D20	7378186	109,00
DC160-03-08.000F0-WJ30ET	WJ30ET	1	○	D20	7377170	93,70
DC160-03-08.000F1-WJ30ET	WJ30ET	1	○	D20	7378187	112,00
DC160-03-08.100A0-WJ30ET	WJ30ET	1	●	D20	7377171	106,00
DC160-03-08.100A1-WJ30ET	WJ30ET	1	●	D20	7378188	127,00
DC160-03-08.100F0-WJ30ET	WJ30ET	1	○	D20	7377172	109,00
DC160-03-08.100F1-WJ30ET	WJ30ET	1	○	D20	7378189	131,00
DC160-03-08.200A0-WJ30ET	WJ30ET	1	●	D20	7377173	106,00
DC160-03-08.200A1-WJ30ET	WJ30ET	1	●	D20	7378190	127,00
DC160-03-08.200F0-WJ30ET	WJ30ET	1	○	D20	7377174	109,00
DC160-03-08.200F1-WJ30ET	WJ30ET	1	●	D20	7378191	131,00

Bezeichnung / Designation	Sorte / Grade	VE / US		Disc. Gr.	Article No.	EURO Stück / piece
DC160-03-08.300A0-WJ30ET	WJ30ET	1	●	D20	7377175	106,00
DC160-03-08.300A1-WJ30ET	WJ30ET	1	●	D20	7378192	127,00
DC160-03-08.300F0-WJ30ET	WJ30ET	1	○	D20	7377176	109,00
DC160-03-08.300F1-WJ30ET	WJ30ET	1	○	D20	7378193	131,00
DC160-03-08.334A0-WJ30ET	WJ30ET	1	●	D20	7377177	106,00
DC160-03-08.334A1-WJ30ET	WJ30ET	1	●	D20	7378194	127,00
DC160-03-08.400A0-WJ30ET	WJ30ET	1	●	D20	7377178	106,00
DC160-03-08.400A1-WJ30ET	WJ30ET	1	●	D20	7378195	127,00
DC160-03-08.400F0-WJ30ET	WJ30ET	1	○	D20	7377179	109,00
DC160-03-08.400F1-WJ30ET	WJ30ET	1	○	D20	7378196	131,00
DC160-03-08.500A0-WJ30ET	WJ30ET	1	●	D20	7377180	106,00
DC160-03-08.500A1-WJ30ET	WJ30ET	1	●	D20	7378197	127,00
DC160-03-08.500F0-WJ30ET	WJ30ET	1	○	D20	7377181	109,00
DC160-03-08.500F1-WJ30ET	WJ30ET	1	●	D20	7378198	131,00
DC160-03-08.600A0-WJ30ET	WJ30ET	1	●	D20	7377182	106,00
DC160-03-08.600A1-WJ30ET	WJ30ET	1	●	D20	7378199	127,00
DC160-03-08.600F0-WJ30ET	WJ30ET	1	○	D20	7377183	109,00
DC160-03-08.600F1-WJ30ET	WJ30ET	1	○	D20	7378200	131,00
DC160-03-08.700A0-WJ30ET	WJ30ET	1	●	D20	7377184	106,00
DC160-03-08.700A1-WJ30ET	WJ30ET	1	●	D20	7378201	127,00
DC160-03-08.700F0-WJ30ET	WJ30ET	1	○	D20	7377185	109,00
DC160-03-08.700F1-WJ30ET	WJ30ET	1	○	D20	7378202	131,00
DC160-03-08.731A0-WJ30ET	WJ30ET	1	●	D20	7377186	106,00
DC160-03-08.731A1-WJ30ET	WJ30ET	1	●	D20	7378203	127,00
DC160-03-08.800A0-WJ30ET	WJ30ET	1	●	D20	7377187	106,00
DC160-03-08.800A1-WJ30ET	WJ30ET	1	●	D20	7378204	127,00
DC160-03-08.800F0-WJ30ET	WJ30ET	1	○	D20	7377188	109,00
DC160-03-08.800F1-WJ30ET	WJ30ET	1	○	D20	7378205	131,00
DC160-03-08.900A0-WJ30ET	WJ30ET	1	●	D20	7377189	106,00
DC160-03-08.900A1-WJ30ET	WJ30ET	1	●	D20	7378206	127,00
DC160-03-08.900F0-WJ30ET	WJ30ET	1	○	D20	7377190	109,00
DC160-03-08.900F1-WJ30ET	WJ30ET	1	○	D20	7378207	131,00
DC160-03-09.000A0-WJ30ET	WJ30ET	1	●	D20	7377191	106,00
DC160-03-09.000A1-WJ30ET	WJ30ET	1	●	D20	7378208	127,00
DC160-03-09.000F0-WJ30ET	WJ30ET	1	○	D20	7377192	109,00
DC160-03-09.000F1-WJ30ET	WJ30ET	1	○	D20	7378209	131,00
DC160-03-09.100A0-WJ30ET	WJ30ET	1	●	D20	7377193	106,00
DC160-03-09.100A1-WJ30ET	WJ30ET	1	●	D20	7378210	127,00
DC160-03-09.100F0-WJ30ET	WJ30ET	1	○	D20	7377194	109,00
DC160-03-09.100F1-WJ30ET	WJ30ET	1	○	D20	7378211	131,00
DC160-03-09.128A0-WJ30ET	WJ30ET	1	●	D20	7377195	106,00
DC160-03-09.128A1-WJ30ET	WJ30ET	1	●	D20	7378212	127,00
DC160-03-09.200A0-WJ30ET	WJ30ET	1	●	D20	7377196	106,00
DC160-03-09.200A1-WJ30ET	WJ30ET	1	●	D20	7378213	127,00
DC160-03-09.200F0-WJ30ET	WJ30ET	1	○	D20	7377198	109,00
DC160-03-09.200F1-WJ30ET	WJ30ET	1	○	D20	7378214	131,00
DC160-03-09.300A0-WJ30ET	WJ30ET	1	●	D20	7377199	106,00
DC160-03-09.300A1-WJ30ET	WJ30ET	1	●	D20	7378215	127,00
DC160-03-09.300F0-WJ30ET	WJ30ET	1	○	D20	7377200	109,00
DC160-03-09.300F1-WJ30ET	WJ30ET	1	○	D20	7378216	131,00
DC160-03-09.400A0-WJ30ET	WJ30ET	1	●	D20	7377201	106,00
DC160-03-09.400A1-WJ30ET	WJ30ET	1	●	D20	7378217	127,00
DC160-03-09.400F0-WJ30ET	WJ30ET	1	○	D20	7377202	109,00
DC160-03-09.400F1-WJ30ET	WJ30ET	1	○	D20	7378218	131,00
DC160-03-09.500A0-WJ30ET	WJ30ET	1	●	D20	7377203	106,00
DC160-03-09.500A1-WJ30ET	WJ30ET	1	●	D20	7378219	127,00
DC160-03-09.500F0-WJ30ET	WJ30ET	1	○	D20	7377204	109,00
DC160-03-09.500F1-WJ30ET	WJ30ET	1	○	D20	7378220	131,00
DC160-03-09.525A0-WJ30ET	WJ30ET	1	●	D20	7377205	106,00
DC160-03-09.525A1-WJ30ET	WJ30ET	1	●	D20	7378221	127,00
DC160-03-09.550A0-WJ30ET	WJ30ET	1	●	D20	7377206	106,00
DC160-03-09.550A1-WJ30ET	WJ30ET	1	●	D20	7378222	127,00
DC160-03-09.550F0-WJ30ET	WJ30ET	1	○	D20	7377207	109,00
DC160-03-09.550F1-WJ30ET	WJ30ET	1	■	D20	7378223*	131,00
DC160-03-09.600A0-WJ30ET	WJ30ET	1	●	D20	7377208	106,00
DC160-03-09.600A1-WJ30ET	WJ30ET	1	●	D20	7378224	127,00
DC160-03-09.600F0-WJ30ET	WJ30ET	1	○	D20	7377209	109,00
DC160-03-09.600F1-WJ30ET	WJ30ET	1	○	D20	7378225	131,00
DC160-03-09.700A0-WJ30ET	WJ30ET	1	●	D20	7377210	106,00
DC160-03-09.700A1-WJ30ET	WJ30ET	1	●	D20	7378226	127,00

Bezeichnung / Designation	Sorte / Grade	VE / US		Disc. Gr.	Article No.	EURO Stück / piece
DC160-03-09.700F0-WJ30ET	WJ30ET	1	○	D20	7377211	109,00
DC160-03-09.700F1-WJ30ET	WJ30ET	1	●	D20	7378227	131,00
DC160-03-09.800A0-WJ30ET	WJ30ET	1	●	D20	7377212	106,00
DC160-03-09.800A1-WJ30ET	WJ30ET	1	●	D20	7378228	127,00
DC160-03-09.800F0-WJ30ET	WJ30ET	1	○	D20	7377213	109,00
DC160-03-09.800F1-WJ30ET	WJ30ET	1	○	D20	7378229	131,00
DC160-03-09.900A0-WJ30ET	WJ30ET	1	●	D20	7377214	106,00
DC160-03-09.900A1-WJ30ET	WJ30ET	1	●	D20	7378230	127,00
DC160-03-09.900F0-WJ30ET	WJ30ET	1	○	D20	7377215	109,00
DC160-03-09.900F1-WJ30ET	WJ30ET	1	○	D20	7378231	131,00
DC160-03-09.922A0-WJ30ET	WJ30ET	1	●	D20	7377216	106,00
DC160-03-09.922A1-WJ30ET	WJ30ET	1	●	D20	7378232	127,00
DC160-03-10.000A0-WJ30ET	WJ30ET	1	●	D20	7377217	106,00
DC160-03-10.000A1-WJ30ET	WJ30ET	1	●	D20	7378233	127,00
DC160-03-10.000F0-WJ30ET	WJ30ET	1	○	D20	7377218	109,00
DC160-03-10.000F1-WJ30ET	WJ30ET	1	●	D20	7378234	131,00
DC160-03-10.100A0-WJ30ET	WJ30ET	1	●	D20	7377219	144,00
DC160-03-10.100A1-WJ30ET	WJ30ET	1	●	D20	7378235	173,00
DC160-03-10.100F0-WJ30ET	WJ30ET	1	○	D20	7377220	148,00
DC160-03-10.100F1-WJ30ET	WJ30ET	1	○	D20	7378236	178,00
DC160-03-10.200A0-WJ30ET	WJ30ET	1	●	D20	7377221	144,00
DC160-03-10.200A1-WJ30ET	WJ30ET	1	●	D20	7378237	173,00
DC160-03-10.200F0-WJ30ET	WJ30ET	1	○	D20	7377222	148,00
DC160-03-10.200F1-WJ30ET	WJ30ET	1	○	D20	7378238	178,00
DC160-03-10.300A0-WJ30ET	WJ30ET	1	●	D20	7377223	144,00
DC160-03-10.300A1-WJ30ET	WJ30ET	1	●	D20	7378239	173,00
DC160-03-10.300F0-WJ30ET	WJ30ET	1	○	D20	7377224	148,00
DC160-03-10.300F1-WJ30ET	WJ30ET	1	○	D20	7378240	178,00
DC160-03-10.319A0-WJ30ET	WJ30ET	1	●	D20	7377225	144,00
DC160-03-10.319A1-WJ30ET	WJ30ET	1	●	D20	7378241	173,00
DC160-03-10.400A0-WJ30ET	WJ30ET	1	●	D20	7377226	144,00
DC160-03-10.400A1-WJ30ET	WJ30ET	1	●	D20	7378242	173,00
DC160-03-10.400F0-WJ30ET	WJ30ET	1	○	D20	7377227	148,00
DC160-03-10.400F1-WJ30ET	WJ30ET	1	○	D20	7378243	178,00
DC160-03-10.500A0-WJ30ET	WJ30ET	1	●	D20	7377228	144,00
DC160-03-10.500A1-WJ30ET	WJ30ET	1	●	D20	7378244	173,00
DC160-03-10.500F0-WJ30ET	WJ30ET	1	○	D20	7377229	148,00
DC160-03-10.500F1-WJ30ET	WJ30ET	1	○	D20	7378245	178,00
DC160-03-10.600A0-WJ30ET	WJ30ET	1	●	D20	7377230	144,00
DC160-03-10.600A1-WJ30ET	WJ30ET	1	●	D20	7378246	173,00
DC160-03-10.600F0-WJ30ET	WJ30ET	1	○	D20	7377231	148,00
DC160-03-10.600F1-WJ30ET	WJ30ET	1	○	D20	7378247	178,00
DC160-03-10.700A0-WJ30ET	WJ30ET	1	●	D20	7377232	144,00
DC160-03-10.700A1-WJ30ET	WJ30ET	1	●	D20	7378248	173,00
DC160-03-10.700F0-WJ30ET	WJ30ET	1	○	D20	7377233	148,00
DC160-03-10.700F1-WJ30ET	WJ30ET	1	○	D20	7378249	178,00
DC160-03-10.716A0-WJ30ET	WJ30ET	1	●	D20	7377234	144,00
DC160-03-10.716A1-WJ30ET	WJ30ET	1	●	D20	7378250	173,00
DC160-03-10.800A0-WJ30ET	WJ30ET	1	●	D20	7377235	144,00
DC160-03-10.800A1-WJ30ET	WJ30ET	1	●	D20	7378251	173,00
DC160-03-10.800F0-WJ30ET	WJ30ET	1	○	D20	7377236	148,00
DC160-03-10.800F1-WJ30ET	WJ30ET	1	○	D20	7378252	178,00
DC160-03-10.900A0-WJ30ET	WJ30ET	1	●	D20	7377237	144,00
DC160-03-10.900A1-WJ30ET	WJ30ET	1	●	D20	7378253	173,00
DC160-03-10.900F0-WJ30ET	WJ30ET	1	○	D20	7377238	148,00
DC160-03-10.900F1-WJ30ET	WJ30ET	1	○	D20	7378254	178,00
DC160-03-11.000A0-WJ30ET	WJ30ET	1	●	D20	7377239	144,00
DC160-03-11.000A1-WJ30ET	WJ30ET	1	●	D20	7378255	173,00
DC160-03-11.000F0-WJ30ET	WJ30ET	1	○	D20	7377240	148,00
DC160-03-11.000F1-WJ30ET	WJ30ET	1	○	D20	7378256	178,00
DC160-03-11.100A0-WJ30ET	WJ30ET	1	●	D20	7377241	144,00
DC160-03-11.100A1-WJ30ET	WJ30ET	1	●	D20	7378257	173,00
DC160-03-11.100F0-WJ30ET	WJ30ET	1	○	D20	7377242	148,00
DC160-03-11.100F1-WJ30ET	WJ30ET	1	○	D20	7378258	178,00
DC160-03-11.113A0-WJ30ET	WJ30ET	1	●	D20	7377243	144,00
DC160-03-11.113A1-WJ30ET	WJ30ET	1	●	D20	7378259	173,00
DC160-03-11.200A0-WJ30ET	WJ30ET	1	●	D20	7377244	144,00
DC160-03-11.200A1-WJ30ET	WJ30ET	1	●	D20	7378260	173,00
DC160-03-11.200F0-WJ30ET	WJ30ET	1	○	D20	7377245	148,00
DC160-03-11.200F1-WJ30ET	WJ30ET	1	●	D20	7378261	178,00

Bezeichnung / Designation	Sorte / Grade	VE / US		Disc. Gr.	Article No.	EURO Stück / piece
DC160-03-11.300A0-WJ30ET	WJ30ET	1	●	D20	7377246	144,00
DC160-03-11.300A1-WJ30ET	WJ30ET	1	●	D20	7378262	173,00
DC160-03-11.300F0-WJ30ET	WJ30ET	1	○	D20	7377247	148,00
DC160-03-11.300F1-WJ30ET	WJ30ET	1	○	D20	7378263	178,00
DC160-03-11.400A0-WJ30ET	WJ30ET	1	●	D20	7377248	144,00
DC160-03-11.400A1-WJ30ET	WJ30ET	1	●	D20	7378264	173,00
DC160-03-11.400F0-WJ30ET	WJ30ET	1	○	D20	7377249	148,00
DC160-03-11.400F1-WJ30ET	WJ30ET	1	○	D20	7378265	178,00
DC160-03-11.500A0-WJ30ET	WJ30ET	1	●	D20	7377250	144,00
DC160-03-11.500A1-WJ30ET	WJ30ET	1	●	D20	7378266	173,00
DC160-03-11.500F0-WJ30ET	WJ30ET	1	○	D20	7377251	148,00
DC160-03-11.500F1-WJ30ET	WJ30ET	1	○	D20	7378267	178,00
DC160-03-11.509A0-WJ30ET	WJ30ET	1	●	D20	7377252	144,00
DC160-03-11.509A1-WJ30ET	WJ30ET	1	●	D20	7378268	173,00
DC160-03-11.550A0-WJ30ET	WJ30ET	1	●	D20	7377253	144,00
DC160-03-11.550A1-WJ30ET	WJ30ET	1	●	D20	7378269	173,00
DC160-03-11.550F0-WJ30ET	WJ30ET	1	○	D20	7377254	148,00
DC160-03-11.550F1-WJ30ET	WJ30ET	1	○	D20	7378270	178,00
DC160-03-11.600A1-WJ30ET	WJ30ET	1	●	D20	7378271	173,00
DC160-03-11.600F0-WJ30ET	WJ30ET	1	○	D20	7377256	148,00
DC160-03-11.600F1-WJ30ET	WJ30ET	1	○	D20	7378272	178,00
DC160-03-11.700A0-WJ30ET	WJ30ET	1	●	D20	7377257	144,00
DC160-03-11.700A1-WJ30ET	WJ30ET	1	●	D20	7378273	173,00
DC160-03-11.700F0-WJ30ET	WJ30ET	1	○	D20	7377258	148,00
DC160-03-11.700F1-WJ30ET	WJ30ET	1	○	D20	7378274	178,00
DC160-03-11.800A0-WJ30ET	WJ30ET	1	●	D20	7377259	144,00
DC160-03-11.800A1-WJ30ET	WJ30ET	1	●	D20	7378275	173,00
DC160-03-11.800F0-WJ30ET	WJ30ET	1	○	D20	7377260	148,00
DC160-03-11.800F1-WJ30ET	WJ30ET	1	○	D20	7378276	178,00
DC160-03-11.900A0-WJ30ET	WJ30ET	1	●	D20	7377261	144,00
DC160-03-11.900A1-WJ30ET	WJ30ET	1	●	D20	7378277	173,00
DC160-03-11.900F0-WJ30ET	WJ30ET	1	○	D20	7377262	148,00
DC160-03-11.900F1-WJ30ET	WJ30ET	1	○	D20	7378278	178,00
DC160-03-11.906A0-WJ30ET	WJ30ET	1	●	D20	7377263	144,00
DC160-03-11.906A1-WJ30ET	WJ30ET	1	●	D20	7378279	173,00
DC160-03-12.000A0-WJ30ET	WJ30ET	1	●	D20	7377264	144,00
DC160-03-12.000A1-WJ30ET	WJ30ET	1	●	D20	7378280	173,00
DC160-03-12.000F0-WJ30ET	WJ30ET	1	●	D20	7377265	148,00
DC160-03-12.000F1-WJ30ET	WJ30ET	1	●	D20	7378281	178,00
DC160-03-12.100A0-WJ30ET	WJ30ET	1	●	D20	7377266	197,00
DC160-03-12.100A1-WJ30ET	WJ30ET	1	●	D20	7378282	237,00
DC160-03-12.100F0-WJ30ET	WJ30ET	1	○	D20	7377267	203,00
DC160-03-12.100F1-WJ30ET	WJ30ET	1	○	D20	7378283	244,00
DC160-03-12.200A0-WJ30ET	WJ30ET	1	●	D20	7377268	197,00
DC160-03-12.200A1-WJ30ET	WJ30ET	1	●	D20	7378284	237,00
DC160-03-12.200F0-WJ30ET	WJ30ET	1	○	D20	7377269	203,00
DC160-03-12.200F1-WJ30ET	WJ30ET	1	○	D20	7378285	244,00
DC160-03-12.250A0-WJ30ET	WJ30ET	1	●	D20	7377270	197,00
DC160-03-12.250A1-WJ30ET	WJ30ET	1	●	D20	7378286	237,00
DC160-03-12.250F0-WJ30ET	WJ30ET	1	○	D20	7377271	203,00
DC160-03-12.250F1-WJ30ET	WJ30ET	1	○	D20	7378287	244,00
DC160-03-12.300A0-WJ30ET	WJ30ET	1	●	D20	7377272	197,00
DC160-03-12.300A1-WJ30ET	WJ30ET	1	●	D20	7378288	237,00
DC160-03-12.300F0-WJ30ET	WJ30ET	1	○	D20	7377273	203,00
DC160-03-12.300F1-WJ30ET	WJ30ET	1	○	D20	7378289	244,00
DC160-03-12.303A0-WJ30ET	WJ30ET	1	●	D20	7377274	197,00
DC160-03-12.303A1-WJ30ET	WJ30ET	1	●	D20	7378290	237,00
DC160-03-12.400A0-WJ30ET	WJ30ET	1	●	D20	7377275	197,00
DC160-03-12.400A1-WJ30ET	WJ30ET	1	●	D20	7378291	237,00
DC160-03-12.400F0-WJ30ET	WJ30ET	1	○	D20	7377276	203,00
DC160-03-12.400F1-WJ30ET	WJ30ET	1	○	D20	7378292	244,00
DC160-03-12.500A0-WJ30ET	WJ30ET	1	●	D20	7377277	197,00
DC160-03-12.500A1-WJ30ET	WJ30ET	1	●	D20	7378293	237,00
DC160-03-12.500F0-WJ30ET	WJ30ET	1	○	D20	7377278	203,00
DC160-03-12.500F1-WJ30ET	WJ30ET	1	○	D20	7378294	244,00
DC160-03-12.600A0-WJ30ET	WJ30ET	1	●	D20	7377279	197,00
DC160-03-12.600A1-WJ30ET	WJ30ET	1	●	D20	7378295	237,00
DC160-03-12.600F0-WJ30ET	WJ30ET	1	○	D20	7377280	203,00
DC160-03-12.600F1-WJ30ET	WJ30ET	1	○	D20	7378296	244,00
DC160-03-12.700A0-WJ30ET	WJ30ET	1	●	D20	7377281	197,00

Bezeichnung / Designation	Sorte / Grade	VE / US		Disc. Gr.	Article No.	EURO Stück / piece
DC160-03-12.700A1-WJ30ET	WJ30ET	1	●	D20	7378297	237,00
DC160-03-12.700F0-WJ30ET	WJ30ET	1	○	D20	7377282	203,00
DC160-03-12.700F1-WJ30ET	WJ30ET	1	○	D20	7378298	244,00
DC160-03-12.750A0-WJ30ET	WJ30ET	1	●	D20	7377283	197,00
DC160-03-12.750A1-WJ30ET	WJ30ET	1	●	D20	7378299	237,00
DC160-03-12.750F0-WJ30ET	WJ30ET	1	○	D20	7377284	203,00
DC160-03-12.750F1-WJ30ET	WJ30ET	1	■	D20	7378300[1]	244,00
DC160-03-12.800A0-WJ30ET	WJ30ET	1	●	D20	7377285	197,00
DC160-03-12.800A1-WJ30ET	WJ30ET	1	●	D20	7378301	237,00
DC160-03-12.800F0-WJ30ET	WJ30ET	1	○	D20	7377286	203,00
DC160-03-12.800F1-WJ30ET	WJ30ET	1	○	D20	7378302	244,00
DC160-03-12.900A0-WJ30ET	WJ30ET	1	●	D20	7377287	197,00
DC160-03-12.900A1-WJ30ET	WJ30ET	1	●	D20	7378303	237,00
DC160-03-12.900F0-WJ30ET	WJ30ET	1	○	D20	7377288	203,00
DC160-03-12.900F1-WJ30ET	WJ30ET	1	○	D20	7378304	244,00
DC160-03-13.000A0-WJ30ET	WJ30ET	1	●	D20	7377289	197,00
DC160-03-13.000A1-WJ30ET	WJ30ET	1	●	D20	7378305	237,00
DC160-03-13.000F0-WJ30ET	WJ30ET	1	○	D20	7377290	203,00
DC160-03-13.000F1-WJ30ET	WJ30ET	1	●	D20	7378306	244,00
DC160-03-13.100A0-WJ30ET	WJ30ET	1	●	D20	7377291	197,00
DC160-03-13.100A1-WJ30ET	WJ30ET	1	●	D20	7378307	237,00
DC160-03-13.100F0-WJ30ET	WJ30ET	1	○	D20	7377292	203,00
DC160-03-13.100F1-WJ30ET	WJ30ET	1	○	D20	7378308	244,00
DC160-03-13.200A0-WJ30ET	WJ30ET	1	●	D20	7377293	197,00
DC160-03-13.200A1-WJ30ET	WJ30ET	1	●	D20	7378309	237,00
DC160-03-13.200F0-WJ30ET	WJ30ET	1	○	D20	7377294	203,00
DC160-03-13.200F1-WJ30ET	WJ30ET	1	○	D20	7378310	244,00
DC160-03-13.300A0-WJ30ET	WJ30ET	1	●	D20	7377295	197,00
DC160-03-13.300A1-WJ30ET	WJ30ET	1	●	D20	7378311	237,00
DC160-03-13.300F0-WJ30ET	WJ30ET	1	○	D20	7377296	203,00
DC160-03-13.300F1-WJ30ET	WJ30ET	1	○	D20	7378312	244,00
DC160-03-13.400A0-WJ30ET	WJ30ET	1	●	D20	7377297	197,00
DC160-03-13.400A1-WJ30ET	WJ30ET	1	●	D20	7378313	237,00
DC160-03-13.400F0-WJ30ET	WJ30ET	1	○	D20	7377298	203,00
DC160-03-13.400F1-WJ30ET	WJ30ET	1	○	D20	7378314	244,00
DC160-03-13.494A0-WJ30ET	WJ30ET	1	●	D20	7377299	197,00
DC160-03-13.494A1-WJ30ET	WJ30ET	1	●	D20	7378315	237,00
DC160-03-13.500A0-WJ30ET	WJ30ET	1	●	D20	7377300	197,00
DC160-03-13.500A1-WJ30ET	WJ30ET	1	●	D20	7378316	237,00
DC160-03-13.500F0-WJ30ET	WJ30ET	1	○	D20	7377301	203,00
DC160-03-13.500F1-WJ30ET	WJ30ET	1	○	D20	7378317	244,00
DC160-03-13.600A0-WJ30ET	WJ30ET	1	●	D20	7377302	197,00
DC160-03-13.600A1-WJ30ET	WJ30ET	1	●	D20	7378318	237,00
DC160-03-13.600F0-WJ30ET	WJ30ET	1	○	D20	7377303	203,00
DC160-03-13.600F1-WJ30ET	WJ30ET	1	○	D20	7378319	244,00
DC160-03-13.700A0-WJ30ET	WJ30ET	1	●	D20	7377304	197,00
DC160-03-13.700A1-WJ30ET	WJ30ET	1	●	D20	7378320	237,00
DC160-03-13.700F0-WJ30ET	WJ30ET	1	○	D20	7377305	203,00
DC160-03-13.700F1-WJ30ET	WJ30ET	1	○	D20	7378321	244,00
DC160-03-13.800A0-WJ30ET	WJ30ET	1	●	D20	7377306	197,00
DC160-03-13.800A1-WJ30ET	WJ30ET	1	●	D20	7378322	237,00
DC160-03-13.800F0-WJ30ET	WJ30ET	1	○	D20	7377307	203,00
DC160-03-13.800F1-WJ30ET	WJ30ET	1	○	D20	7378323	244,00
DC160-03-13.900A0-WJ30ET	WJ30ET	1	●	D20	7377308	197,00
DC160-03-13.900A1-WJ30ET	WJ30ET	1	●	D20	7378324	237,00
DC160-03-13.900F0-WJ30ET	WJ30ET	1	○	D20	7377309	203,00
DC160-03-13.900F1-WJ30ET	WJ30ET	1	○	D20	7378325	244,00
DC160-03-14.000A0-WJ30ET	WJ30ET	1	●	D20	7377310	197,00
DC160-03-14.000A1-WJ30ET	WJ30ET	1	●	D20	7378326	237,00
DC160-03-14.000F0-WJ30ET	WJ30ET	1	○	D20	7377311	203,00
DC160-03-14.000F1-WJ30ET	WJ30ET	1	○	D20	7378327	244,00
DC160-03-14.100A0-WJ30ET	WJ30ET	1	●	D20	7377312	258,00
DC160-03-14.100A1-WJ30ET	WJ30ET	1	●	D20	7378328	309,00
DC160-03-14.100F0-WJ30ET	WJ30ET	1	○	D20	7377313	265,00
DC160-03-14.100F1-WJ30ET	WJ30ET	1	○	D20	7378329	319,00
DC160-03-14.200A0-WJ30ET	WJ30ET	1	●	D20	7377314	258,00
DC160-03-14.200A1-WJ30ET	WJ30ET	1	●	D20	7378330	309,00
DC160-03-14.200F0-WJ30ET	WJ30ET	1	○	D20	7377315	265,00
DC160-03-14.200F1-WJ30ET	WJ30ET	1	○	D20	7378331	319,00
DC160-03-14.288A0-WJ30ET	WJ30ET	1	●	D20	7377316	258,00

Bezeichnung / Designation	Sorte / Grade	VE / US		Disc. Gr.	Article No.	EURO Stück / piece
DC160-03-14.288A1-WJ30ET	WJ30ET	1	●	D20	7378332	309,00
DC160-03-14.300A0-WJ30ET	WJ30ET	1	●	D20	7377317	258,00
DC160-03-14.300A1-WJ30ET	WJ30ET	1	●	D20	7378333	309,00
DC160-03-14.300F0-WJ30ET	WJ30ET	1	○	D20	7377318	265,00
DC160-03-14.300F1-WJ30ET	WJ30ET	1	○	D20	7378334	319,00
DC160-03-14.400A0-WJ30ET	WJ30ET	1	●	D20	7377319	258,00
DC160-03-14.400A1-WJ30ET	WJ30ET	1	●	D20	7378335	309,00
DC160-03-14.400F0-WJ30ET	WJ30ET	1	○	D20	7377320	265,00
DC160-03-14.400F1-WJ30ET	WJ30ET	1	○	D20	7378336	319,00
DC160-03-14.500A0-WJ30ET	WJ30ET	1	●	D20	7377321	258,00
DC160-03-14.500A1-WJ30ET	WJ30ET	1	●	D20	7378337	309,00
DC160-03-14.500F0-WJ30ET	WJ30ET	1	○	D20	7377322	265,00
DC160-03-14.500F1-WJ30ET	WJ30ET	1	○	D20	7378338	319,00
DC160-03-14.600A0-WJ30ET	WJ30ET	1	●	D20	7377323	258,00
DC160-03-14.600A1-WJ30ET	WJ30ET	1	●	D20	7378339	309,00
DC160-03-14.600F0-WJ30ET	WJ30ET	1	○	D20	7377324	265,00
DC160-03-14.600F1-WJ30ET	WJ30ET	1	○	D20	7378340	319,00
DC160-03-14.700A0-WJ30ET	WJ30ET	1	○	D20	7377325[2]	258,00
DC160-03-14.700A1-WJ30ET	WJ30ET	1	●	D20	7378341	309,00
DC160-03-14.700F0-WJ30ET	WJ30ET	1	○	D20	7377326	265,00
DC160-03-14.700F1-WJ30ET	WJ30ET	1	○	D20	7378342	319,00
DC160-03-14.750F0-WJ30ET	WJ30ET	1	○	D20	7377328	265,00
DC160-03-14.750F1-WJ30ET	WJ30ET	1	■	D20	7378344[1]	319,00
DC160-03-14.800A0-WJ30ET	WJ30ET	1	●	D20	7377329	258,00
DC160-03-14.800A1-WJ30ET	WJ30ET	1	●	D20	7378345	309,00
DC160-03-14.800F0-WJ30ET	WJ30ET	1	○	D20	7377330	265,00
DC160-03-14.800F1-WJ30ET	WJ30ET	1	○	D20	7378346	319,00
DC160-03-15.000A0-WJ30ET	WJ30ET	1	●	D20	7377331	258,00
DC160-03-15.000A1-WJ30ET	WJ30ET	1	●	D20	7378347	309,00
DC160-03-15.000F0-WJ30ET	WJ30ET	1	○	D20	7377332	265,00
DC160-03-15.000F1-WJ30ET	WJ30ET	1	○	D20	7378348	319,00
DC160-03-15.100A0-WJ30ET	WJ30ET	1	●	D20	7377333	258,00
DC160-03-15.100A1-WJ30ET	WJ30ET	1	●	D20	7378349	309,00
DC160-03-15.100F0-WJ30ET	WJ30ET	1	○	D20	7377334	265,00
DC160-03-15.100F1-WJ30ET	WJ30ET	1	○	D20	7378350	319,00
DC160-03-15.200A0-WJ30ET	WJ30ET	1	●	D20	7377335	258,00
DC160-03-15.200A1-WJ30ET	WJ30ET	1	●	D20	7378351	309,00
DC160-03-15.200F0-WJ30ET	WJ30ET	1	○	D20	7377336	265,00
DC160-03-15.200F1-WJ30ET	WJ30ET	1	○	D20	7378352	319,00
DC160-03-15.300A0-WJ30ET	WJ30ET	1	●	D20	7377337	258,00
DC160-03-15.300A1-WJ30ET	WJ30ET	1	●	D20	7378353	309,00
DC160-03-15.300F0-WJ30ET	WJ30ET	1	○	D20	7377338	265,00
DC160-03-15.300F1-WJ30ET	WJ30ET	1	○	D20	7378354	319,00
DC160-03-15.500A0-WJ30ET	WJ30ET	1	●	D20	7377339	258,00
DC160-03-15.500A1-WJ30ET	WJ30ET	1	●	D20	7378355	309,00
DC160-03-15.500F0-WJ30ET	WJ30ET	1	○	D20	7377340	265,00
DC160-03-15.500F1-WJ30ET	WJ30ET	1	○	D20	7378356	319,00
DC160-03-15.600A0-WJ30ET	WJ30ET	1	●	D20	7377341	258,00
DC160-03-15.600A1-WJ30ET	WJ30ET	1	●	D20	7378357	309,00
DC160-03-15.600F0-WJ30ET	WJ30ET	1	○	D20	7377342	265,00
DC160-03-15.600F1-WJ30ET	WJ30ET	1	○	D20	7378358	319,00
DC160-03-15.700A0-WJ30ET	WJ30ET	1	●	D20	7377343	258,00
DC160-03-15.700A1-WJ30ET	WJ30ET	1	●	D20	7378359	309,00
DC160-03-15.700F0-WJ30ET	WJ30ET	1	○	D20	7377344	265,00
DC160-03-15.700F1-WJ30ET	WJ30ET	1	○	D20	7378360	319,00
DC160-03-15.800A0-WJ30ET	WJ30ET	1	●	D20	7377345	258,00
DC160-03-15.800A1-WJ30ET	WJ30ET	1	●	D20	7378361	309,00
DC160-03-15.800F0-WJ30ET	WJ30ET	1	○	D20	7377346	265,00
DC160-03-15.800F1-WJ30ET	WJ30ET	1	○	D20	7378362	319,00
DC160-03-15.875A0-WJ30ET	WJ30ET	1	●	D20	7377347	258,00
DC160-03-15.875A1-WJ30ET	WJ30ET	1	●	D20	7378363	309,00
DC160-03-15.900A0-WJ30ET	WJ30ET	1	●	D20	7377348	258,00
DC160-03-15.900A1-WJ30ET	WJ30ET	1	●	D20	7378364	309,00
DC160-03-15.900F0-WJ30ET	WJ30ET	1	○	D20	7377349	265,00
DC160-03-15.900F1-WJ30ET	WJ30ET	1	○	D20	7378365	319,00
DC160-03-16.000A0-WJ30ET	WJ30ET	1	●	D20	7377350	258,00
DC160-03-16.000A1-WJ30ET	WJ30ET	1	●	D20	7378366	309,00
DC160-03-16.000F0-WJ30ET	WJ30ET	1	○	D20	7377351	265,00
DC160-03-16.000F1-WJ30ET	WJ30ET	1	○	D20	7378367	319,00
DC160-03-16.100A0-WJ30ET	WJ30ET	1	●	D20	7377352	326,00

Bezeichnung / Designation	Sorte / Grade	VE / US		Disc. Gr.	Article No.	EURO Stück / piece
DC160-03-16.100A1-WJ30ET	WJ30ET	1	●	D20	7378368	391,00
DC160-03-16.100F0-WJ30ET	WJ30ET	1	○	D20	7377353	336,00
DC160-03-16.100F1-WJ30ET	WJ30ET	1	○	D20	7378369	403,00
DC160-03-16.200A0-WJ30ET	WJ30ET	1	●	D20	7377354	326,00
DC160-03-16.200A1-WJ30ET	WJ30ET	1	●	D20	7378370	391,00
DC160-03-16.200F0-WJ30ET	WJ30ET	1	○	D20	7377355	336,00
DC160-03-16.200F1-WJ30ET	WJ30ET	1	○	D20	7378371	403,00
DC160-03-16.300A0-WJ30ET	WJ30ET	1	●	D20	7377356	326,00
DC160-03-16.300A1-WJ30ET	WJ30ET	1	●	D20	7378372	391,00
DC160-03-16.300F0-WJ30ET	WJ30ET	1	○	D20	7377357	336,00
DC160-03-16.300F1-WJ30ET	WJ30ET	1	○	D20	7378373	403,00
DC160-03-16.400A1-WJ30ET	WJ30ET	1	●	D20	7378374	391,00
DC160-03-16.400F0-WJ30ET	WJ30ET	1	○	D20	7377359	336,00
DC160-03-16.400F1-WJ30ET	WJ30ET	1	○	D20	7378375	403,00
DC160-03-16.500A0-WJ30ET	WJ30ET	1	●	D20	7377360	326,00
DC160-03-16.500A1-WJ30ET	WJ30ET	1	●	D20	7378376	391,00
DC160-03-16.500F0-WJ30ET	WJ30ET	1	○	D20	7377361	336,00
DC160-03-16.500F1-WJ30ET	WJ30ET	1	○	D20	7378377	403,00
DC160-03-16.600A0-WJ30ET	WJ30ET	1	●	D20	7377362	326,00
DC160-03-16.600A1-WJ30ET	WJ30ET	1	●	D20	7378378	391,00
DC160-03-16.600F0-WJ30ET	WJ30ET	1	○	D20	7377363	336,00
DC160-03-16.600F1-WJ30ET	WJ30ET	1	○	D20	7378379	403,00
DC160-03-16.700A0-WJ30ET	WJ30ET	1	●	D20	7377364	326,00
DC160-03-16.700A1-WJ30ET	WJ30ET	1	●	D20	7378380	391,00
DC160-03-16.700F0-WJ30ET	WJ30ET	1	○	D20	7377365	336,00
DC160-03-16.700F1-WJ30ET	WJ30ET	1	○	D20	7378382	403,00
DC160-03-16.750A0-WJ30ET	WJ30ET	1	●	D20	7377366	326,00
DC160-03-16.750A1-WJ30ET	WJ30ET	1	●	D20	7378383	391,00
DC160-03-16.750F0-WJ30ET	WJ30ET	1	○	D20	7377367	336,00
DC160-03-16.750F1-WJ30ET	WJ30ET	1	■	D20	7378384*	403,00
DC160-03-16.800A0-WJ30ET	WJ30ET	1	●	D20	7377368	326,00
DC160-03-16.800A1-WJ30ET	WJ30ET	1	●	D20	7378385	391,00
DC160-03-16.800F0-WJ30ET	WJ30ET	1	○	D20	7377369	336,00
DC160-03-16.800F1-WJ30ET	WJ30ET	1	○	D20	7378386	403,00
DC160-03-17.000A0-WJ30ET	WJ30ET	1	●	D20	7377370	326,00
DC160-03-17.000A1-WJ30ET	WJ30ET	1	●	D20	7378387	391,00
DC160-03-17.000F0-WJ30ET	WJ30ET	1	○	D20	7377371	336,00
DC160-03-17.000F1-WJ30ET	WJ30ET	1	○	D20	7378388	403,00
DC160-03-17.200A0-WJ30ET	WJ30ET	1	●	D20	7377372	326,00
DC160-03-17.200A1-WJ30ET	WJ30ET	1	●	D20	7378389	391,00
DC160-03-17.200F0-WJ30ET	WJ30ET	1	○	D20	7377373	336,00
DC160-03-17.200F1-WJ30ET	WJ30ET	1	○	D20	7378390	403,00
DC160-03-17.300A0-WJ30ET	WJ30ET	1	●	D20	7377374	326,00
DC160-03-17.300A1-WJ30ET	WJ30ET	1	●	D20	7378391	391,00
DC160-03-17.300F0-WJ30ET	WJ30ET	1	○	D20	7377375	336,00
DC160-03-17.300F1-WJ30ET	WJ30ET	1	○	D20	7378392	403,00
DC160-03-17.500A0-WJ30ET	WJ30ET	1	●	D20	7377376	326,00
DC160-03-17.500A1-WJ30ET	WJ30ET	1	●	D20	7378393	391,00
DC160-03-17.500F0-WJ30ET	WJ30ET	1	○	D20	7377377	336,00
DC160-03-17.500F1-WJ30ET	WJ30ET	1	○	D20	7378394	403,00
DC160-03-17.600A0-WJ30ET	WJ30ET	1	●	D20	7377378	326,00
DC160-03-17.600A1-WJ30ET	WJ30ET	1	●	D20	7378395	391,00
DC160-03-17.600F0-WJ30ET	WJ30ET	1	○	D20	7377379	336,00
DC160-03-17.600F1-WJ30ET	WJ30ET	1	○	D20	7378396	403,00
DC160-03-17.700A0-WJ30ET	WJ30ET	1	●	D20	7377380	326,00
DC160-03-17.700A1-WJ30ET	WJ30ET	1	●	D20	7378397	391,00
DC160-03-17.700F0-WJ30ET	WJ30ET	1	○	D20	7377381	336,00
DC160-03-17.700F1-WJ30ET	WJ30ET	1	○	D20	7378398	403,00
DC160-03-17.800A0-WJ30ET	WJ30ET	1	●	D20	7377382	326,00
DC160-03-17.800A1-WJ30ET	WJ30ET	1	●	D20	7378399	391,00
DC160-03-17.800F0-WJ30ET	WJ30ET	1	○	D20	7377383	336,00
DC160-03-17.800F1-WJ30ET	WJ30ET	1	○	D20	7378400	403,00
DC160-03-18.000A0-WJ30ET	WJ30ET	1	●	D20	7377384	326,00
DC160-03-18.000A1-WJ30ET	WJ30ET	1	●	D20	7378401	391,00
DC160-03-18.000F0-WJ30ET	WJ30ET	1	○	D20	7377385	336,00
DC160-03-18.000F1-WJ30ET	WJ30ET	1	○	D20	7378402	403,00
DC160-03-18.200A0-WJ30ET	WJ30ET	1	●	D20	7377386	394,00
DC160-03-18.200A1-WJ30ET	WJ30ET	1	●	D20	7378403	473,00
DC160-03-18.200F0-WJ30ET	WJ30ET	1	○	D20	7377387	406,00
DC160-03-18.200F1-WJ30ET	WJ30ET	1	○	D20	7378404	487,00

Bezeichnung / Designation	Sorte / Grade	VE / US		Disc. Gr.	Article No.	EURO Stück / piece
DC160-03-18.500A0-WJ30ET	WJ30ET	1	●	D20	7377388	394,00
DC160-03-18.500A1-WJ30ET	WJ30ET	1	●	D20	7378405	473,00
DC160-03-18.500F0-WJ30ET	WJ30ET	1	○	D20	7377389	406,00
DC160-03-18.500F1-WJ30ET	WJ30ET	1	○	D20	7378406	487,00
DC160-03-18.700A0-WJ30ET	WJ30ET	1	●	D20	7377390	394,00
DC160-03-18.700A1-WJ30ET	WJ30ET	1	●	D20	7378407	473,00
DC160-03-18.700F0-WJ30ET	WJ30ET	1	○	D20	7377391	406,00
DC160-03-18.700F1-WJ30ET	WJ30ET	1	○	D20	7378408	487,00
DC160-03-18.800A0-WJ30ET	WJ30ET	1	●	D20	7377392	394,00
DC160-03-18.800A1-WJ30ET	WJ30ET	1	●	D20	7378409	473,00
DC160-03-18.800F0-WJ30ET	WJ30ET	1	○	D20	7377393	406,00
DC160-03-18.800F1-WJ30ET	WJ30ET	1	○	D20	7378410	487,00
DC160-03-19.000A0-WJ30ET	WJ30ET	1	●	D20	7377394	394,00
DC160-03-19.000A1-WJ30ET	WJ30ET	1	●	D20	7378411	473,00
DC160-03-19.000F0-WJ30ET	WJ30ET	1	○	D20	7377395	406,00
DC160-03-19.000F1-WJ30ET	WJ30ET	1	○	D20	7378412	487,00
DC160-03-19.050A0-WJ30ET	WJ30ET	1	●	D20	7377396	394,00
DC160-03-19.050A1-WJ30ET	WJ30ET	1	●	D20	7378413	473,00
DC160-03-19.500A0-WJ30ET	WJ30ET	1	●	D20	7377397	394,00
DC160-03-19.500A1-WJ30ET	WJ30ET	1	●	D20	7378414	473,00
DC160-03-19.500F0-WJ30ET	WJ30ET	1	○	D20	7377398	406,00
DC160-03-19.500F1-WJ30ET	WJ30ET	1	○	D20	7378415	487,00
DC160-03-19.700A0-WJ30ET	WJ30ET	1	●	D20	7377399	394,00
DC160-03-19.700A1-WJ30ET	WJ30ET	1	●	D20	7378416	473,00
DC160-03-19.700F0-WJ30ET	WJ30ET	1	○	D20	7377400	406,00
DC160-03-19.700F1-WJ30ET	WJ30ET	1	○	D20	7378417	487,00
DC160-03-19.800A0-WJ30ET	WJ30ET	1	●	D20	7377401	394,00
DC160-03-19.800A1-WJ30ET	WJ30ET	1	●	D20	7378418	473,00
DC160-03-19.800F0-WJ30ET	WJ30ET	1	○	D20	7377402	406,00
DC160-03-19.800F1-WJ30ET	WJ30ET	1	○	D20	7378419	487,00
DC160-03-20.000A0-WJ30ET	WJ30ET	1	●	D20	7377403	394,00
DC160-03-20.000A1-WJ30ET	WJ30ET	1	●	D20	7378420	473,00
DC160-03-20.000F0-WJ30ET	WJ30ET	1	○	D20	7377404	406,00
DC160-03-20.000F1-WJ30ET	WJ30ET	1	○	D20	7378421	487,00
DC160-05-03.000A0-WJ30ET	WJ30ET	1	●	D20	7378422	94,80
DC160-05-03.000A1-WJ30ET	WJ30ET	1	●	D20	7377405	114,00
DC160-05-03.000F0-WJ30ET	WJ30ET	1	○	D20	7378423	97,60
DC160-05-03.000F1-WJ30ET	WJ30ET	1	●	D20	7377406	117,00
DC160-05-03.100A0-WJ30ET	WJ30ET	1	●	D20	7378424	94,80
DC160-05-03.100A1-WJ30ET	WJ30ET	1	●	D20	7377407	114,00
DC160-05-03.100F0-WJ30ET	WJ30ET	1	○	D20	7378425	97,60
DC160-05-03.100F1-WJ30ET	WJ30ET	1	●	D20	7377408	117,00
DC160-05-03.175A0-WJ30ET	WJ30ET	1	●	D20	7378426	94,80
DC160-05-03.175A1-WJ30ET	WJ30ET	1	●	D20	7377409	114,00
DC160-05-03.200A0-WJ30ET	WJ30ET	1	●	D20	7378427	94,80
DC160-05-03.200A1-WJ30ET	WJ30ET	1	●	D20	7377410	114,00
DC160-05-03.200F0-WJ30ET	WJ30ET	1	○	D20	7378428	97,60
DC160-05-03.200F1-WJ30ET	WJ30ET	1	●	D20	7377411	117,00
DC160-05-03.250A0-WJ30ET	WJ30ET	1	●	D20	7378429	94,80
DC160-05-03.250A1-WJ30ET	WJ30ET	1	●	D20	7377412	114,00
DC160-05-03.250F0-WJ30ET	WJ30ET	1	○	D20	7378430	97,60
DC160-05-03.250F1-WJ30ET	WJ30ET	1	○	D20	7377413	117,00
DC160-05-03.300A0-WJ30ET	WJ30ET	1	●	D20	7378431	94,80
DC160-05-03.300A1-WJ30ET	WJ30ET	1	●	D20	7377414	114,00
DC160-05-03.300F0-WJ30ET	WJ30ET	1	○	D20	7378432	97,60
DC160-05-03.300F1-WJ30ET	WJ30ET	1	●	D20	7377415	117,00
DC160-05-03.400A0-WJ30ET	WJ30ET	1	●	D20	7378433	94,80
DC160-05-03.400A1-WJ30ET	WJ30ET	1	●	D20	7377416	114,00
DC160-05-03.400F0-WJ30ET	WJ30ET	1	○	D20	7378434	97,60
DC160-05-03.400F1-WJ30ET	WJ30ET	1	●	D20	7377417	117,00
DC160-05-03.500A0-WJ30ET	WJ30ET	1	●	D20	7378435	94,80
DC160-05-03.500A1-WJ30ET	WJ30ET	1	●	D20	7377418	114,00
DC160-05-03.500F0-WJ30ET	WJ30ET	1	○	D20	7378436	97,60
DC160-05-03.500F1-WJ30ET	WJ30ET	1	●	D20	7377419	117,00
DC160-05-03.572A0-WJ30ET	WJ30ET	1	●	D20	7378437	94,80
DC160-05-03.572A1-WJ30ET	WJ30ET	1	●	D20	7377420	114,00
DC160-05-03.600A0-WJ30ET	WJ30ET	1	●	D20	7378438	94,80
DC160-05-03.600A1-WJ30ET	WJ30ET	1	●	D20	7377421	114,00
DC160-05-03.600F0-WJ30ET	WJ30ET	1	○	D20	7378439	97,60
DC160-05-03.600F1-WJ30ET	WJ30ET	1	●	D20	7377422	117,00

Bezeichnung / Designation	Sorte / Grade	VE / US		Disc. Gr.	Article No.	EURO Stück / piece
DC160-05-03.650A0-WJ30ET	WJ30ET	1	●	D20	7378440	94,80
DC160-05-03.650A1-WJ30ET	WJ30ET	1	●	D20	7377423	114,00
DC160-05-03.650F0-WJ30ET	WJ30ET	1	○	D20	7378441	97,60
DC160-05-03.650F1-WJ30ET	WJ30ET	1	●	D20	7377424	117,00
DC160-05-03.700A0-WJ30ET	WJ30ET	1	●	D20	7378442	94,80
DC160-05-03.700A1-WJ30ET	WJ30ET	1	●	D20	7377425	114,00
DC160-05-03.700F0-WJ30ET	WJ30ET	1	○	D20	7378443	97,60
DC160-05-03.700F1-WJ30ET	WJ30ET	1	●	D20	7377426	117,00
DC160-05-03.800A0-WJ30ET	WJ30ET	1	●	D20	7378444	94,80
DC160-05-03.800A1-WJ30ET	WJ30ET	1	●	D20	7377427	114,00
DC160-05-03.800F0-WJ30ET	WJ30ET	1	○	D20	7378445	97,60
DC160-05-03.800F1-WJ30ET	WJ30ET	1	●	D20	7377428	117,00
DC160-05-03.900A0-WJ30ET	WJ30ET	1	●	D20	7378446	94,80
DC160-05-03.900A1-WJ30ET	WJ30ET	1	●	D20	7377429	114,00
DC160-05-03.900F0-WJ30ET	WJ30ET	1	○	D20	7378447	97,60
DC160-05-03.900F1-WJ30ET	WJ30ET	1	●	D20	7377430	117,00
DC160-05-03.969A0-WJ30ET	WJ30ET	1	●	D20	7378448	94,80
DC160-05-03.969A1-WJ30ET	WJ30ET	1	●	D20	7377431	114,00
DC160-05-04.000A0-WJ30ET	WJ30ET	1	●	D20	7378449	94,80
DC160-05-04.000A1-WJ30ET	WJ30ET	1	●	D20	7377432	114,00
DC160-05-04.000F0-WJ30ET	WJ30ET	1	○	D20	7378450	97,60
DC160-05-04.000F1-WJ30ET	WJ30ET	1	●	D20	7377433	117,00
DC160-05-04.100A0-WJ30ET	WJ30ET	1	●	D20	7378451	94,80
DC160-05-04.100A1-WJ30ET	WJ30ET	1	●	D20	7377434	114,00
DC160-05-04.100F0-WJ30ET	WJ30ET	1	○	D20	7378452	97,60
DC160-05-04.100F1-WJ30ET	WJ30ET	1	●	D20	7377435	117,00
DC160-05-04.200A0-WJ30ET	WJ30ET	1	●	D20	7378453	94,80
DC160-05-04.200A1-WJ30ET	WJ30ET	1	●	D20	7377436	114,00
DC160-05-04.200F0-WJ30ET	WJ30ET	1	○	D20	7378454	97,60
DC160-05-04.200F1-WJ30ET	WJ30ET	1	●	D20	7377437	117,00
DC160-05-04.300A0-WJ30ET	WJ30ET	1	●	D20	7378455	94,80
DC160-05-04.300A1-WJ30ET	WJ30ET	1	●	D20	7377438	114,00
DC160-05-04.300F0-WJ30ET	WJ30ET	1	○	D20	7378456	97,60
DC160-05-04.300F1-WJ30ET	WJ30ET	1	●	D20	7377439	117,00
DC160-05-04.366A0-WJ30ET	WJ30ET	1	●	D20	7378457	94,80
DC160-05-04.366A1-WJ30ET	WJ30ET	1	●	D20	7377440	114,00
DC160-05-04.400A0-WJ30ET	WJ30ET	1	●	D20	7378458	94,80
DC160-05-04.400A1-WJ30ET	WJ30ET	1	●	D20	7377441	114,00
DC160-05-04.400F0-WJ30ET	WJ30ET	1	○	D20	7378459	97,60
DC160-05-04.400F1-WJ30ET	WJ30ET	1	●	D20	7377442	117,00
DC160-05-04.500A0-WJ30ET	WJ30ET	1	●	D20	7378460	94,80
DC160-05-04.500A1-WJ30ET	WJ30ET	1	●	D20	7377443	114,00
DC160-05-04.500F0-WJ30ET	WJ30ET	1	○	D20	7378461	97,60
DC160-05-04.500F1-WJ30ET	WJ30ET	1	●	D20	7377444	117,00
DC160-05-04.600A0-WJ30ET	WJ30ET	1	●	D20	7378462	94,80
DC160-05-04.600A1-WJ30ET	WJ30ET	1	●	D20	7377445	114,00
DC160-05-04.600F0-WJ30ET	WJ30ET	1	○	D20	7378463	97,60
DC160-05-04.600F1-WJ30ET	WJ30ET	1	●	D20	7377446	117,00
DC160-05-04.650A0-WJ30ET	WJ30ET	1	●	D20	7378464	94,80
DC160-05-04.650A1-WJ30ET	WJ30ET	1	●	D20	7377447	114,00
DC160-05-04.650F0-WJ30ET	WJ30ET	1	○	D20	7378465	97,60
DC160-05-04.650F1-WJ30ET	WJ30ET	1	●	D20	7377448	117,00
DC160-05-04.700A0-WJ30ET	WJ30ET	1	●	D20	7378466	94,80
DC160-05-04.700A1-WJ30ET	WJ30ET	1	●	D20	7377449	114,00
DC160-05-04.700F0-WJ30ET	WJ30ET	1	○	D20	7378467	97,60
DC160-05-04.700F1-WJ30ET	WJ30ET	1	●	D20	7377450	117,00
DC160-05-04.763A0-WJ30ET	WJ30ET	1	●	D20	7378468	94,80
DC160-05-04.763A1-WJ30ET	WJ30ET	1	●	D20	7377451	114,00
DC160-05-04.800A0-WJ30ET	WJ30ET	1	●	D20	7378469	94,80
DC160-05-04.800A1-WJ30ET	WJ30ET	1	●	D20	7377452	114,00
DC160-05-04.800F0-WJ30ET	WJ30ET	1	○	D20	7378470	97,60
DC160-05-04.800F1-WJ30ET	WJ30ET	1	●	D20	7377453	117,00
DC160-05-04.900A0-WJ30ET	WJ30ET	1	●	D20	7378471	94,80
DC160-05-04.900A1-WJ30ET	WJ30ET	1	●	D20	7377454	114,00
DC160-05-04.900F0-WJ30ET	WJ30ET	1	○	D20	7378472	97,60
DC160-05-04.900F1-WJ30ET	WJ30ET	1	●	D20	7377455	117,00
DC160-05-05.000A0-WJ30ET	WJ30ET	1	●	D20	7378473	94,80
DC160-05-05.000A1-WJ30ET	WJ30ET	1	●	D20	7377456	114,00
DC160-05-05.000F0-WJ30ET	WJ30ET	1	○	D20	7378474	97,60
DC160-05-05.000F1-WJ30ET	WJ30ET	1	●	D20	7377457	117,00

Bezeichnung / Designation	Sorte / Grade	VE / US		Disc. Gr.	Article No.	EURO Stück / piece
DC160-05-05.100A0-WJ30ET	WJ30ET	1	●	D20	7378475	94,80
DC160-05-05.100A1-WJ30ET	WJ30ET	1	●	D20	7377458	114,00
DC160-05-05.100F0-WJ30ET	WJ30ET	1	○	D20	7378476	97,60
DC160-05-05.100F1-WJ30ET	WJ30ET	1	●	D20	7377459	117,00
DC160-05-05.159A0-WJ30ET	WJ30ET	1	●	D20	7378477	94,80
DC160-05-05.159A1-WJ30ET	WJ30ET	1	●	D20	7377460	114,00
DC160-05-05.200A0-WJ30ET	WJ30ET	1	●	D20	7378478	94,80
DC160-05-05.200A1-WJ30ET	WJ30ET	1	●	D20	7377461	114,00
DC160-05-05.200F0-WJ30ET	WJ30ET	1	○	D20	7378479	97,60
DC160-05-05.200F1-WJ30ET	WJ30ET	1	●	D20	7377462	117,00
DC160-05-05.300A0-WJ30ET	WJ30ET	1	●	D20	7378480	94,80
DC160-05-05.300A1-WJ30ET	WJ30ET	1	●	D20	7377463	114,00
DC160-05-05.300F0-WJ30ET	WJ30ET	1	○	D20	7378481	97,60
DC160-05-05.300F1-WJ30ET	WJ30ET	1	●	D20	7377464	117,00
DC160-05-05.400A0-WJ30ET	WJ30ET	1	●	D20	7378482	94,80
DC160-05-05.400A1-WJ30ET	WJ30ET	1	●	D20	7377465	114,00
DC160-05-05.400F0-WJ30ET	WJ30ET	1	○	D20	7378483	97,60
DC160-05-05.400F1-WJ30ET	WJ30ET	1	●	D20	7377466	117,00
DC160-05-05.500A0-WJ30ET	WJ30ET	1	●	D20	7378484	94,80
DC160-05-05.500A1-WJ30ET	WJ30ET	1	●	D20	7377467	114,00
DC160-05-05.500F0-WJ30ET	WJ30ET	1	○	D20	7378485	97,60
DC160-05-05.500F1-WJ30ET	WJ30ET	1	●	D20	7377468	117,00
DC160-05-05.550A0-WJ30ET	WJ30ET	1	●	D20	7378486	94,80
DC160-05-05.550A1-WJ30ET	WJ30ET	1	●	D20	7377469	114,00
DC160-05-05.550F0-WJ30ET	WJ30ET	1	○	D20	7378487	97,60
DC160-05-05.550F1-WJ30ET	WJ30ET	1	●	D20	7377470	117,00
DC160-05-05.556A0-WJ30ET	WJ30ET	1	●	D20	7378488	94,80
DC160-05-05.556A1-WJ30ET	WJ30ET	1	●	D20	7377471	114,00
DC160-05-05.600A0-WJ30ET	WJ30ET	1	●	D20	7378489	94,80
DC160-05-05.600A1-WJ30ET	WJ30ET	1	●	D20	7377472	114,00
DC160-05-05.600F0-WJ30ET	WJ30ET	1	○	D20	7378490	97,60
DC160-05-05.600F1-WJ30ET	WJ30ET	1	●	D20	7377473	117,00
DC160-05-05.700A0-WJ30ET	WJ30ET	1	●	D20	7378491	94,80
DC160-05-05.700A1-WJ30ET	WJ30ET	1	●	D20	7377474	114,00
DC160-05-05.700F0-WJ30ET	WJ30ET	1	○	D20	7378492	97,60
DC160-05-05.700F1-WJ30ET	WJ30ET	1	●	D20	7377475	117,00
DC160-05-05.800A0-WJ30ET	WJ30ET	1	●	D20	7378493	94,80
DC160-05-05.800A1-WJ30ET	WJ30ET	1	●	D20	7377476	114,00
DC160-05-05.800F0-WJ30ET	WJ30ET	1	○	D20	7378494	97,60
DC160-05-05.800F1-WJ30ET	WJ30ET	1	●	D20	7377477	117,00
DC160-05-05.900A0-WJ30ET	WJ30ET	1	●	D20	7378495	94,80
DC160-05-05.900A1-WJ30ET	WJ30ET	1	●	D20	7377478	114,00
DC160-05-05.900F0-WJ30ET	WJ30ET	1	○	D20	7378496	97,60
DC160-05-05.900F1-WJ30ET	WJ30ET	1	●	D20	7377479	117,00
DC160-05-05.953A0-WJ30ET	WJ30ET	1	●	D20	7378497	94,80
DC160-05-05.953A1-WJ30ET	WJ30ET	1	●	D20	7377480	114,00
DC160-05-06.000A0-WJ30ET	WJ30ET	1	●	D20	7378498	94,80
DC160-05-06.000A1-WJ30ET	WJ30ET	1	●	D20	7377481	114,00
DC160-05-06.000F0-WJ30ET	WJ30ET	1	○	D20	7378499	97,60
DC160-05-06.000F1-WJ30ET	WJ30ET	1	●	D20	7377482	117,00
DC160-05-06.100A0-WJ30ET	WJ30ET	1	●	D20	7378500	114,00
DC160-05-06.100A1-WJ30ET	WJ30ET	1	●	D20	7377483	137,00
DC160-05-06.100F0-WJ30ET	WJ30ET	1	○	D20	7378501	117,00
DC160-05-06.100F1-WJ30ET	WJ30ET	1	●	D20	7377484	141,00
DC160-05-06.200A0-WJ30ET	WJ30ET	1	●	D20	7378502	114,00
DC160-05-06.200A1-WJ30ET	WJ30ET	1	●	D20	7377485	137,00
DC160-05-06.200F0-WJ30ET	WJ30ET	1	○	D20	7378503	117,00
DC160-05-06.200F1-WJ30ET	WJ30ET	1	●	D20	7377486	141,00
DC160-05-06.300A0-WJ30ET	WJ30ET	1	●	D20	7378504	114,00
DC160-05-06.300A1-WJ30ET	WJ30ET	1	●	D20	7377487	137,00
DC160-05-06.300F0-WJ30ET	WJ30ET	1	○	D20	7378505	117,00
DC160-05-06.300F1-WJ30ET	WJ30ET	1	●	D20	7377488	141,00
DC160-05-06.350A0-WJ30ET	WJ30ET	1	●	D20	7378506	114,00
DC160-05-06.350A1-WJ30ET	WJ30ET	1	●	D20	7377489	137,00
DC160-05-06.400A0-WJ30ET	WJ30ET	1	●	D20	7378507	114,00
DC160-05-06.400A1-WJ30ET	WJ30ET	1	●	D20	7377490	137,00
DC160-05-06.400F0-WJ30ET	WJ30ET	1	○	D20	7378508	117,00
DC160-05-06.400F1-WJ30ET	WJ30ET	1	●	D20	7377491	141,00
DC160-05-06.500A0-WJ30ET	WJ30ET	1	●	D20	7378509	114,00
DC160-05-06.500A1-WJ30ET	WJ30ET	1	●	D20	7377492	137,00

Bezeichnung / Designation	Sorte / Grade	VE / US		Disc. Gr.	Article No.	EURO Stück / piece
DC160-05-06.500F0-WJ30ET	WJ30ET	1	○	D20	7378510	117,00
DC160-05-06.500F1-WJ30ET	WJ30ET	1	●	D20	7377493	141,00
DC160-05-06.600A0-WJ30ET	WJ30ET	1	●	D20	7378511	114,00
DC160-05-06.600A1-WJ30ET	WJ30ET	1	●	D20	7377494	137,00
DC160-05-06.600F0-WJ30ET	WJ30ET	1	○	D20	7378512	117,00
DC160-05-06.600F1-WJ30ET	WJ30ET	1	●	D20	7377495	141,00
DC160-05-06.700A0-WJ30ET	WJ30ET	1	●	D20	7378513	114,00
DC160-05-06.700A1-WJ30ET	WJ30ET	1	●	D20	7377496	137,00
DC160-05-06.700F0-WJ30ET	WJ30ET	1	○	D20	7378514	117,00
DC160-05-06.700F1-WJ30ET	WJ30ET	1	●	D20	7377497	141,00
DC160-05-06.747A0-WJ30ET	WJ30ET	1	●	D20	7378515	114,00
DC160-05-06.747A1-WJ30ET	WJ30ET	1	●	D20	7377498	137,00
DC160-05-06.800A0-WJ30ET	WJ30ET	1	●	D20	7378516	114,00
DC160-05-06.800A1-WJ30ET	WJ30ET	1	●	D20	7377499	137,00
DC160-05-06.800F0-WJ30ET	WJ30ET	1	○	D20	7378517	117,00
DC160-05-06.800F1-WJ30ET	WJ30ET	1	●	D20	7377500	141,00
DC160-05-06.900A0-WJ30ET	WJ30ET	1	●	D20	7378518	114,00
DC160-05-06.900A1-WJ30ET	WJ30ET	1	●	D20	7377501	137,00
DC160-05-06.900F0-WJ30ET	WJ30ET	1	○	D20	7378519	117,00
DC160-05-06.900F1-WJ30ET	WJ30ET	1	●	D20	7377502	141,00
DC160-05-07.000A0-WJ30ET	WJ30ET	1	●	D20	7378520	114,00
DC160-05-07.000A1-WJ30ET	WJ30ET	1	●	D20	7377503	137,00
DC160-05-07.000F0-WJ30ET	WJ30ET	1	○	D20	7378521	117,00
DC160-05-07.000F1-WJ30ET	WJ30ET	1	●	D20	7377504	141,00
DC160-05-07.100A0-WJ30ET	WJ30ET	1	●	D20	7378522	114,00
DC160-05-07.100A1-WJ30ET	WJ30ET	1	●	D20	7377505	137,00
DC160-05-07.100F0-WJ30ET	WJ30ET	1	○	D20	7378523	117,00
DC160-05-07.100F1-WJ30ET	WJ30ET	1	●	D20	7377506	141,00
DC160-05-07.144A0-WJ30ET	WJ30ET	1	●	D20	7378524	114,00
DC160-05-07.144A1-WJ30ET	WJ30ET	1	●	D20	7377507	137,00
DC160-05-07.200A0-WJ30ET	WJ30ET	1	●	D20	7378525	114,00
DC160-05-07.200A1-WJ30ET	WJ30ET	1	●	D20	7377508	137,00
DC160-05-07.200F0-WJ30ET	WJ30ET	1	○	D20	7378526	117,00
DC160-05-07.200F1-WJ30ET	WJ30ET	1	●	D20	7377509	141,00
DC160-05-07.300A0-WJ30ET	WJ30ET	1	●	D20	7378527	114,00
DC160-05-07.300A1-WJ30ET	WJ30ET	1	●	D20	7377510	137,00
DC160-05-07.300F0-WJ30ET	WJ30ET	1	○	D20	7378528	117,00
DC160-05-07.300F1-WJ30ET	WJ30ET	1	●	D20	7377511	141,00
DC160-05-07.400A0-WJ30ET	WJ30ET	1	●	D20	7378529	114,00
DC160-05-07.400A1-WJ30ET	WJ30ET	1	●	D20	7377513	137,00
DC160-05-07.400F0-WJ30ET	WJ30ET	1	○	D20	7378530	117,00
DC160-05-07.400F1-WJ30ET	WJ30ET	1	●	D20	7377514	141,00
DC160-05-07.500A0-WJ30ET	WJ30ET	1	●	D20	7378531	114,00
DC160-05-07.500A1-WJ30ET	WJ30ET	1	●	D20	7377515	137,00
DC160-05-07.500F0-WJ30ET	WJ30ET	1	○	D20	7378532	117,00
DC160-05-07.500F1-WJ30ET	WJ30ET	1	●	D20	7377516	141,00
DC160-05-07.541A0-WJ30ET	WJ30ET	1	●	D20	7378533	114,00
DC160-05-07.541A1-WJ30ET	WJ30ET	1	●	D20	7377517	137,00
DC160-05-07.550A0-WJ30ET	WJ30ET	1	○	D20	7378534*	114,00
DC160-05-07.550A1-WJ30ET	WJ30ET	1	●	D20	7377518	137,00
DC160-05-07.550F0-WJ30ET	WJ30ET	1	○	D20	7378535	117,00
DC160-05-07.550F1-WJ30ET	WJ30ET	1	●	D20	7377519	141,00
DC160-05-07.600A0-WJ30ET	WJ30ET	1	●	D20	7378536	114,00
DC160-05-07.600A1-WJ30ET	WJ30ET	1	●	D20	7377520	137,00
DC160-05-07.600F0-WJ30ET	WJ30ET	1	○	D20	7378537	117,00
DC160-05-07.600F1-WJ30ET	WJ30ET	1	●	D20	7377521	141,00
DC160-05-07.700A0-WJ30ET	WJ30ET	1	●	D20	7378538	114,00
DC160-05-07.700A1-WJ30ET	WJ30ET	1	●	D20	7377522	137,00
DC160-05-07.700F0-WJ30ET	WJ30ET	1	○	D20	7378539	117,00
DC160-05-07.700F1-WJ30ET	WJ30ET	1	●	D20	7377523	141,00
DC160-05-07.800A0-WJ30ET	WJ30ET	1	●	D20	7378540	114,00
DC160-05-07.800A1-WJ30ET	WJ30ET	1	●	D20	7377524	137,00
DC160-05-07.800F0-WJ30ET	WJ30ET	1	○	D20	7378541	117,00
DC160-05-07.800F1-WJ30ET	WJ30ET	1	●	D20	7377525	141,00
DC160-05-07.900A0-WJ30ET	WJ30ET	1	●	D20	7378542	114,00
DC160-05-07.900A1-WJ30ET	WJ30ET	1	●	D20	7377526	137,00
DC160-05-07.900F0-WJ30ET	WJ30ET	1	○	D20	7378543	117,00
DC160-05-07.900F1-WJ30ET	WJ30ET	1	●	D20	7377527	141,00
DC160-05-07.938A0-WJ30ET	WJ30ET	1	●	D20	7378544	114,00
DC160-05-07.938A1-WJ30ET	WJ30ET	1	●	D20	7377528	137,00

Bezeichnung / Designation	Sorte / Grade	VE / US		Disc. Gr.	Article No.	EURO Stück / piece
DC160-05-08.000A0-WJ30ET	WJ30ET	1	●	D20	7378545	114,00
DC160-05-08.000A1-WJ30ET	WJ30ET	1	●	D20	7377529	137,00
DC160-05-08.000F0-WJ30ET	WJ30ET	1	○	D20	7378546	117,00
DC160-05-08.000F1-WJ30ET	WJ30ET	1	●	D20	7377530	141,00
DC160-05-08.100A0-WJ30ET	WJ30ET	1	●	D20	7378547	133,00
DC160-05-08.100A1-WJ30ET	WJ30ET	1	●	D20	7377531	159,00
DC160-05-08.100F0-WJ30ET	WJ30ET	1	○	D20	7378548	137,00
DC160-05-08.100F1-WJ30ET	WJ30ET	1	●	D20	7377532	164,00
DC160-05-08.200A0-WJ30ET	WJ30ET	1	●	D20	7378549	133,00
DC160-05-08.200A1-WJ30ET	WJ30ET	1	●	D20	7377533	159,00
DC160-05-08.200F0-WJ30ET	WJ30ET	1	○	D20	7378550	137,00
DC160-05-08.200F1-WJ30ET	WJ30ET	1	●	D20	7377534	164,00
DC160-05-08.300A0-WJ30ET	WJ30ET	1	●	D20	7378551	133,00
DC160-05-08.300A1-WJ30ET	WJ30ET	1	●	D20	7377535	159,00
DC160-05-08.300F0-WJ30ET	WJ30ET	1	○	D20	7378552	137,00
DC160-05-08.300F1-WJ30ET	WJ30ET	1	●	D20	7377536	164,00
DC160-05-08.334A0-WJ30ET	WJ30ET	1	●	D20	7378553	133,00
DC160-05-08.334A1-WJ30ET	WJ30ET	1	●	D20	7377537	159,00
DC160-05-08.400A0-WJ30ET	WJ30ET	1	●	D20	7378554	133,00
DC160-05-08.400A1-WJ30ET	WJ30ET	1	●	D20	7377538	159,00
DC160-05-08.400F0-WJ30ET	WJ30ET	1	○	D20	7378555	137,00
DC160-05-08.400F1-WJ30ET	WJ30ET	1	●	D20	7377539	164,00
DC160-05-08.500A0-WJ30ET	WJ30ET	1	●	D20	7378556	133,00
DC160-05-08.500A1-WJ30ET	WJ30ET	1	●	D20	7377540	159,00
DC160-05-08.500F0-WJ30ET	WJ30ET	1	○	D20	7378557	137,00
DC160-05-08.500F1-WJ30ET	WJ30ET	1	●	D20	7377541	164,00
DC160-05-08.600A0-WJ30ET	WJ30ET	1	●	D20	7378558	133,00
DC160-05-08.600A1-WJ30ET	WJ30ET	1	●	D20	7377542	159,00
DC160-05-08.600F0-WJ30ET	WJ30ET	1	○	D20	7378559	137,00
DC160-05-08.600F1-WJ30ET	WJ30ET	1	●	D20	7377543	164,00
DC160-05-08.700A0-WJ30ET	WJ30ET	1	●	D20	7378560	133,00
DC160-05-08.700A1-WJ30ET	WJ30ET	1	●	D20	7377544	159,00
DC160-05-08.700F0-WJ30ET	WJ30ET	1	○	D20	7378561	137,00
DC160-05-08.700F1-WJ30ET	WJ30ET	1	●	D20	7377545	164,00
DC160-05-08.731A0-WJ30ET	WJ30ET	1	●	D20	7378562	133,00
DC160-05-08.731A1-WJ30ET	WJ30ET	1	●	D20	7377546	159,00
DC160-05-08.800A0-WJ30ET	WJ30ET	1	●	D20	7378563	133,00
DC160-05-08.800A1-WJ30ET	WJ30ET	1	●	D20	7377547	159,00
DC160-05-08.800F0-WJ30ET	WJ30ET	1	○	D20	7378564	137,00
DC160-05-08.800F1-WJ30ET	WJ30ET	1	●	D20	7377548	164,00
DC160-05-08.900A0-WJ30ET	WJ30ET	1	●	D20	7378565	133,00
DC160-05-08.900A1-WJ30ET	WJ30ET	1	●	D20	7377549	159,00
DC160-05-08.900F0-WJ30ET	WJ30ET	1	○	D20	7378566	137,00
DC160-05-08.900F1-WJ30ET	WJ30ET	1	●	D20	7377550	164,00
DC160-05-09.000A0-WJ30ET	WJ30ET	1	●	D20	7378567	133,00
DC160-05-09.000A1-WJ30ET	WJ30ET	1	●	D20	7377551	159,00
DC160-05-09.000F0-WJ30ET	WJ30ET	1	○	D20	7378568	137,00
DC160-05-09.000F1-WJ30ET	WJ30ET	1	●	D20	7377552	164,00
DC160-05-09.100A0-WJ30ET	WJ30ET	1	●	D20	7378569	133,00
DC160-05-09.100A1-WJ30ET	WJ30ET	1	●	D20	7377553	159,00
DC160-05-09.100F0-WJ30ET	WJ30ET	1	○	D20	7378570	137,00
DC160-05-09.100F1-WJ30ET	WJ30ET	1	●	D20	7377554	164,00
DC160-05-09.128A0-WJ30ET	WJ30ET	1	●	D20	7378571	133,00
DC160-05-09.128A1-WJ30ET	WJ30ET	1	●	D20	7377555	159,00
DC160-05-09.200A1-WJ30ET	WJ30ET	1	●	D20	7377556	159,00
DC160-05-09.200F0-WJ30ET	WJ30ET	1	○	D20	7378573	137,00
DC160-05-09.200F1-WJ30ET	WJ30ET	1	●	D20	7377557	164,00
DC160-05-09.300A0-WJ30ET	WJ30ET	1	●	D20	7378574	133,00
DC160-05-09.300A1-WJ30ET	WJ30ET	1	●	D20	7377558	159,00
DC160-05-09.300F0-WJ30ET	WJ30ET	1	○	D20	7378575	137,00
DC160-05-09.300F1-WJ30ET	WJ30ET	1	●	D20	7377559	164,00
DC160-05-09.400A0-WJ30ET	WJ30ET	1	●	D20	7378576	133,00
DC160-05-09.400A1-WJ30ET	WJ30ET	1	●	D20	7377560	159,00
DC160-05-09.400F0-WJ30ET	WJ30ET	1	○	D20	7378577	137,00
DC160-05-09.400F1-WJ30ET	WJ30ET	1	●	D20	7377561	164,00
DC160-05-09.500A0-WJ30ET	WJ30ET	1	●	D20	7378578	133,00
DC160-05-09.500A1-WJ30ET	WJ30ET	1	●	D20	7377562	159,00
DC160-05-09.500F0-WJ30ET	WJ30ET	1	○	D20	7378579	137,00
DC160-05-09.500F1-WJ30ET	WJ30ET	1	●	D20	7377563	164,00
DC160-05-09.525A0-WJ30ET	WJ30ET	1	●	D20	7378580	133,00

Bezeichnung / Designation	Sorte / Grade	VE / US		Disc. Gr.	Article No.	EURO Stück / piece
DC160-05-09.525A1-WJ30ET	WJ30ET	1	●	D20	7377564	159,00
DC160-05-09.550A0-WJ30ET	WJ30ET	1	●	D20	7378581	133,00
DC160-05-09.550A1-WJ30ET	WJ30ET	1	●	D20	7377565	159,00
DC160-05-09.550F0-WJ30ET	WJ30ET	1	○	D20	7378582	137,00
DC160-05-09.550F1-WJ30ET	WJ30ET	1	○	D20	7377566	164,00
DC160-05-09.600A0-WJ30ET	WJ30ET	1	●	D20	7378583	133,00
DC160-05-09.600A1-WJ30ET	WJ30ET	1	●	D20	7377567	159,00
DC160-05-09.600F0-WJ30ET	WJ30ET	1	○	D20	7378584	137,00
DC160-05-09.600F1-WJ30ET	WJ30ET	1	●	D20	7377568	164,00
DC160-05-09.700A0-WJ30ET	WJ30ET	1	●	D20	7378585	133,00
DC160-05-09.700A1-WJ30ET	WJ30ET	1	●	D20	7377569	159,00
DC160-05-09.700F0-WJ30ET	WJ30ET	1	○	D20	7378586	137,00
DC160-05-09.700F1-WJ30ET	WJ30ET	1	●	D20	7377570	164,00
DC160-05-09.800A0-WJ30ET	WJ30ET	1	●	D20	7378587	133,00
DC160-05-09.800A1-WJ30ET	WJ30ET	1	●	D20	7377571	159,00
DC160-05-09.800F0-WJ30ET	WJ30ET	1	○	D20	7378588	137,00
DC160-05-09.800F1-WJ30ET	WJ30ET	1	●	D20	7377572	164,00
DC160-05-09.900A0-WJ30ET	WJ30ET	1	●	D20	7378589	133,00
DC160-05-09.900A1-WJ30ET	WJ30ET	1	●	D20	7377573	159,00
DC160-05-09.900F0-WJ30ET	WJ30ET	1	○	D20	7378590	137,00
DC160-05-09.900F1-WJ30ET	WJ30ET	1	●	D20	7377574	164,00
DC160-05-09.922A0-WJ30ET	WJ30ET	1	●	D20	7378591	133,00
DC160-05-09.922A1-WJ30ET	WJ30ET	1	●	D20	7377575	159,00
DC160-05-10.000A0-WJ30ET	WJ30ET	1	●	D20	7378592	133,00
DC160-05-10.000A1-WJ30ET	WJ30ET	1	●	D20	7377576	159,00
DC160-05-10.000F0-WJ30ET	WJ30ET	1	○	D20	7378593	137,00
DC160-05-10.000F1-WJ30ET	WJ30ET	1	●	D20	7377577	164,00
DC160-05-10.100A0-WJ30ET	WJ30ET	1	●	D20	7378594	180,00
DC160-05-10.100A1-WJ30ET	WJ30ET	1	●	D20	7377578	216,00
DC160-05-10.100F0-WJ30ET	WJ30ET	1	○	D20	7378595	185,00
DC160-05-10.100F1-WJ30ET	WJ30ET	1	●	D20	7377579	223,00
DC160-05-10.200A0-WJ30ET	WJ30ET	1	●	D20	7378596	180,00
DC160-05-10.200A1-WJ30ET	WJ30ET	1	●	D20	7377580	216,00
DC160-05-10.200F0-WJ30ET	WJ30ET	1	○	D20	7378597	185,00
DC160-05-10.200F1-WJ30ET	WJ30ET	1	●	D20	7377581	223,00
DC160-05-10.300A0-WJ30ET	WJ30ET	1	●	D20	7378598	180,00
DC160-05-10.300A1-WJ30ET	WJ30ET	1	●	D20	7377582	216,00
DC160-05-10.300F0-WJ30ET	WJ30ET	1	○	D20	7378599	185,00
DC160-05-10.300F1-WJ30ET	WJ30ET	1	●	D20	7377583	223,00
DC160-05-10.319A0-WJ30ET	WJ30ET	1	●	D20	7378600	180,00
DC160-05-10.319A1-WJ30ET	WJ30ET	1	●	D20	7377584	216,00
DC160-05-10.400A0-WJ30ET	WJ30ET	1	●	D20	7378601	180,00
DC160-05-10.400A1-WJ30ET	WJ30ET	1	●	D20	7377585	216,00
DC160-05-10.400F0-WJ30ET	WJ30ET	1	○	D20	7378602	185,00
DC160-05-10.400F1-WJ30ET	WJ30ET	1	●	D20	7377586	223,00
DC160-05-10.500A0-WJ30ET	WJ30ET	1	●	D20	7378603	180,00
DC160-05-10.500A1-WJ30ET	WJ30ET	1	●	D20	7377587	216,00
DC160-05-10.500F0-WJ30ET	WJ30ET	1	○	D20	7378604	185,00
DC160-05-10.500F1-WJ30ET	WJ30ET	1	●	D20	7377588	223,00
DC160-05-10.600A0-WJ30ET	WJ30ET	1	●	D20	7378605	180,00
DC160-05-10.600A1-WJ30ET	WJ30ET	1	●	D20	7377589	216,00
DC160-05-10.600F0-WJ30ET	WJ30ET	1	○	D20	7378606	185,00
DC160-05-10.600F1-WJ30ET	WJ30ET	1	○	D20	7377590	223,00
DC160-05-10.700A0-WJ30ET	WJ30ET	1	●	D20	7378607	180,00
DC160-05-10.700A1-WJ30ET	WJ30ET	1	●	D20	7377591	216,00
DC160-05-10.700F0-WJ30ET	WJ30ET	1	○	D20	7378608	185,00
DC160-05-10.700F1-WJ30ET	WJ30ET	1	●	D20	7377592	223,00
DC160-05-10.716A0-WJ30ET	WJ30ET	1	●	D20	7378609	180,00
DC160-05-10.716A1-WJ30ET	WJ30ET	1	●	D20	7377593	216,00
DC160-05-10.800A0-WJ30ET	WJ30ET	1	●	D20	7378610	180,00
DC160-05-10.800A1-WJ30ET	WJ30ET	1	●	D20	7377594	216,00
DC160-05-10.800F0-WJ30ET	WJ30ET	1	○	D20	7378611	185,00
DC160-05-10.800F1-WJ30ET	WJ30ET	1	●	D20	7377595	223,00
DC160-05-10.900A0-WJ30ET	WJ30ET	1	●	D20	7378612	180,00
DC160-05-10.900A1-WJ30ET	WJ30ET	1	●	D20	7377596	216,00
DC160-05-10.900F0-WJ30ET	WJ30ET	1	○	D20	7378613	185,00
DC160-05-10.900F1-WJ30ET	WJ30ET	1	○	D20	7377597	223,00
DC160-05-11.000A0-WJ30ET	WJ30ET	1	●	D20	7378614	180,00
DC160-05-11.000A1-WJ30ET	WJ30ET	1	●	D20	7377598	216,00
DC160-05-11.000F0-WJ30ET	WJ30ET	1	○	D20	7378615	185,00

Bezeichnung / Designation	Sorte / Grade	VE / US		Disc. Gr.	Article No.	EURO Stück / piece
DC160-05-11.000F1-WJ30ET	WJ30ET	1	●	D20	7377599	223,00
DC160-05-11.100A0-WJ30ET	WJ30ET	1	●	D20	7378616	180,00
DC160-05-11.100A1-WJ30ET	WJ30ET	1	●	D20	7377600	216,00
DC160-05-11.100F0-WJ30ET	WJ30ET	1	○	D20	7378617	185,00
DC160-05-11.100F1-WJ30ET	WJ30ET	1	●	D20	7377601	223,00
DC160-05-11.113A0-WJ30ET	WJ30ET	1	●	D20	7378618	180,00
DC160-05-11.113A1-WJ30ET	WJ30ET	1	●	D20	7377602	216,00
DC160-05-11.200A0-WJ30ET	WJ30ET	1	●	D20	7378619	180,00
DC160-05-11.200A1-WJ30ET	WJ30ET	1	●	D20	7377603	216,00
DC160-05-11.200F0-WJ30ET	WJ30ET	1	○	D20	7378620	185,00
DC160-05-11.200F1-WJ30ET	WJ30ET	1	●	D20	7377604	223,00
DC160-05-11.300A1-WJ30ET	WJ30ET	1	●	D20	7377605	216,00
DC160-05-11.300F0-WJ30ET	WJ30ET	1	○	D20	7378622	185,00
DC160-05-11.300F1-WJ30ET	WJ30ET	1	●	D20	7377606	223,00
DC160-05-11.400A0-WJ30ET	WJ30ET	1	●	D20	7378623	180,00
DC160-05-11.400A1-WJ30ET	WJ30ET	1	●	D20	7377607	216,00
DC160-05-11.400F0-WJ30ET	WJ30ET	1	○	D20	7378624	185,00
DC160-05-11.400F1-WJ30ET	WJ30ET	1	○	D20	7377608	223,00
DC160-05-11.500A0-WJ30ET	WJ30ET	1	●	D20	7378625	180,00
DC160-05-11.500A1-WJ30ET	WJ30ET	1	●	D20	7377609	216,00
DC160-05-11.500F0-WJ30ET	WJ30ET	1	○	D20	7378626	185,00
DC160-05-11.500F1-WJ30ET	WJ30ET	1	●	D20	7377610	223,00
DC160-05-11.509A0-WJ30ET	WJ30ET	1	●	D20	7378627	180,00
DC160-05-11.509A1-WJ30ET	WJ30ET	1	●	D20	7377611	216,00
DC160-05-11.550A0-WJ30ET	WJ30ET	1	●	D20	7378628	180,00
DC160-05-11.550A1-WJ30ET	WJ30ET	1	●	D20	7377612	216,00
DC160-05-11.550F0-WJ30ET	WJ30ET	1	○	D20	7378629	185,00
DC160-05-11.550F1-WJ30ET	WJ30ET	1	○	D20	7377613	223,00
DC160-05-11.600A0-WJ30ET	WJ30ET	1	●	D20	7378630	180,00
DC160-05-11.600A1-WJ30ET	WJ30ET	1	●	D20	7377614	216,00
DC160-05-11.600F0-WJ30ET	WJ30ET	1	○	D20	7378631	185,00
DC160-05-11.600F1-WJ30ET	WJ30ET	1	○	D20	7377615	223,00
DC160-05-11.700A0-WJ30ET	WJ30ET	1	●	D20	7378632	180,00
DC160-05-11.700A1-WJ30ET	WJ30ET	1	●	D20	7377616	216,00
DC160-05-11.700F0-WJ30ET	WJ30ET	1	○	D20	7378633	185,00
DC160-05-11.700F1-WJ30ET	WJ30ET	1	●	D20	7377617	223,00
DC160-05-11.800A0-WJ30ET	WJ30ET	1	●	D20	7378634	180,00
DC160-05-11.800A1-WJ30ET	WJ30ET	1	●	D20	7377618	216,00
DC160-05-11.800F0-WJ30ET	WJ30ET	1	○	D20	7378635	185,00
DC160-05-11.800F1-WJ30ET	WJ30ET	1	●	D20	7377619	223,00
DC160-05-11.900A1-WJ30ET	WJ30ET	1	●	D20	7377620	216,00
DC160-05-11.900F0-WJ30ET	WJ30ET	1	○	D20	7378637	185,00
DC160-05-11.900F1-WJ30ET	WJ30ET	1	○	D20	7377621	223,00
DC160-05-11.906A0-WJ30ET	WJ30ET	1	●	D20	7378638	180,00
DC160-05-11.906A1-WJ30ET	WJ30ET	1	●	D20	7377622	216,00
DC160-05-12.000A0-WJ30ET	WJ30ET	1	●	D20	7378639	180,00
DC160-05-12.000A1-WJ30ET	WJ30ET	1	●	D20	7377623	216,00
DC160-05-12.000F0-WJ30ET	WJ30ET	1	○	D20	7378640	185,00
DC160-05-12.000F1-WJ30ET	WJ30ET	1	●	D20	7377624	223,00
DC160-05-12.100A0-WJ30ET	WJ30ET	1	●	D20	7378641	246,00
DC160-05-12.100A1-WJ30ET	WJ30ET	1	●	D20	7377625	296,00
DC160-05-12.100F0-WJ30ET	WJ30ET	1	○	D20	7378642	254,00
DC160-05-12.100F1-WJ30ET	WJ30ET	1	●	D20	7377626	305,00
DC160-05-12.200A0-WJ30ET	WJ30ET	1	●	D20	7378643	246,00
DC160-05-12.200A1-WJ30ET	WJ30ET	1	●	D20	7377627	296,00
DC160-05-12.200F0-WJ30ET	WJ30ET	1	○	D20	7378644	254,00
DC160-05-12.200F1-WJ30ET	WJ30ET	1	●	D20	7377628	305,00
DC160-05-12.250A0-WJ30ET	WJ30ET	1	●	D20	7378645	246,00
DC160-05-12.250A1-WJ30ET	WJ30ET	1	●	D20	7377629	296,00
DC160-05-12.250F0-WJ30ET	WJ30ET	1	○	D20	7378646	254,00
DC160-05-12.250F1-WJ30ET	WJ30ET	1	○	D20	7377630	305,00
DC160-05-12.300A0-WJ30ET	WJ30ET	1	●	D20	7378647	246,00
DC160-05-12.300A1-WJ30ET	WJ30ET	1	●	D20	7377631	296,00
DC160-05-12.300F0-WJ30ET	WJ30ET	1	○	D20	7378648	254,00
DC160-05-12.300F1-WJ30ET	WJ30ET	1	●	D20	7377632	305,00
DC160-05-12.303A1-WJ30ET	WJ30ET	1	●	D20	7377633	296,00
DC160-05-12.400A0-WJ30ET	WJ30ET	1	●	D20	7378650	246,00
DC160-05-12.400A1-WJ30ET	WJ30ET	1	●	D20	7377634	296,00
DC160-05-12.400F0-WJ30ET	WJ30ET	1	○	D20	7378651	254,00
DC160-05-12.400F1-WJ30ET	WJ30ET	1	○	D20	7377635	305,00

Bezeichnung / Designation	Sorte / Grade	VE / US		Disc. Gr.	Article No.	EURO Stück / piece
DC160-05-12.500A0-WJ30ET	WJ30ET	1	●	D20	7378652	**246,00**
DC160-05-12.500A1-WJ30ET	WJ30ET	1	●	D20	7377636	**296,00**
DC160-05-12.500F0-WJ30ET	WJ30ET	1	○	D20	7378653	**254,00**
DC160-05-12.500F1-WJ30ET	WJ30ET	1	●	D20	7377637	**305,00**
DC160-05-12.600A0-WJ30ET	WJ30ET	1	●	D20	7378654	**246,00**
DC160-05-12.600A1-WJ30ET	WJ30ET	1	●	D20	7377638	**296,00**
DC160-05-12.600F0-WJ30ET	WJ30ET	1	○	D20	7378655	**254,00**
DC160-05-12.600F1-WJ30ET	WJ30ET	1	●	D20	7377639	**305,00**
DC160-05-12.700A0-WJ30ET	WJ30ET	1	●	D20	7378656	**246,00**
DC160-05-12.700A1-WJ30ET	WJ30ET	1	●	D20	7377640	**296,00**
DC160-05-12.700F0-WJ30ET	WJ30ET	1	○	D20	7378657	**254,00**
DC160-05-12.700F1-WJ30ET	WJ30ET	1	●	D20	7377641	**305,00**
DC160-05-12.750A0-WJ30ET	WJ30ET	1	●	D20	7378658	**246,00**
DC160-05-12.750A1-WJ30ET	WJ30ET	1	●	D20	7377642	**296,00**
DC160-05-12.750F0-WJ30ET	WJ30ET	1	○	D20	7378659	**254,00**
DC160-05-12.750F1-WJ30ET	WJ30ET	1	■	D20	7377643[1]	**305,00**
DC160-05-12.800A0-WJ30ET	WJ30ET	1	●	D20	7378660	**246,00**
DC160-05-12.800A1-WJ30ET	WJ30ET	1	●	D20	7377644	**296,00**
DC160-05-12.800F0-WJ30ET	WJ30ET	1	○	D20	7378661	**254,00**
DC160-05-12.800F1-WJ30ET	WJ30ET	1	●	D20	7377645	**305,00**
DC160-05-12.900A0-WJ30ET	WJ30ET	1	●	D20	7378662	**246,00**
DC160-05-12.900A1-WJ30ET	WJ30ET	1	●	D20	7377646	**296,00**
DC160-05-12.900F0-WJ30ET	WJ30ET	1	○	D20	7378663	**254,00**
DC160-05-12.900F1-WJ30ET	WJ30ET	1	○	D20	7377647	**305,00**
DC160-05-13.000A0-WJ30ET	WJ30ET	1	●	D20	7378664	**246,00**
DC160-05-13.000A1-WJ30ET	WJ30ET	1	●	D20	7377648	**296,00**
DC160-05-13.000F0-WJ30ET	WJ30ET	1	○	D20	7378665	**254,00**
DC160-05-13.000F1-WJ30ET	WJ30ET	1	●	D20	7377649	**305,00**
DC160-05-13.100A0-WJ30ET	WJ30ET	1	●	D20	7378666	**246,00**
DC160-05-13.100A1-WJ30ET	WJ30ET	1	●	D20	7377650	**296,00**
DC160-05-13.100F0-WJ30ET	WJ30ET	1	○	D20	7378667	**254,00**
DC160-05-13.100F1-WJ30ET	WJ30ET	1	●	D20	7377651	**305,00**
DC160-05-13.200A0-WJ30ET	WJ30ET	1	●	D20	7378668	**246,00**
DC160-05-13.200A1-WJ30ET	WJ30ET	1	●	D20	7377652	**296,00**
DC160-05-13.200F0-WJ30ET	WJ30ET	1	○	D20	7378669	**254,00**
DC160-05-13.200F1-WJ30ET	WJ30ET	1	●	D20	7377653	**305,00**
DC160-05-13.300A0-WJ30ET	WJ30ET	1	●	D20	7378670	**246,00**
DC160-05-13.300A1-WJ30ET	WJ30ET	1	●	D20	7377654	**296,00**
DC160-05-13.300F0-WJ30ET	WJ30ET	1	○	D20	7378671	**254,00**
DC160-05-13.300F1-WJ30ET	WJ30ET	1	●	D20	7377655	**305,00**
DC160-05-13.400A0-WJ30ET	WJ30ET	1	○	D20	7378672[2]	**246,00**
DC160-05-13.400A1-WJ30ET	WJ30ET	1	●	D20	7377656	**296,00**
DC160-05-13.400F0-WJ30ET	WJ30ET	1	○	D20	7378673	**254,00**
DC160-05-13.400F1-WJ30ET	WJ30ET	1	○	D20	7377657	**305,00**
DC160-05-13.494A0-WJ30ET	WJ30ET	1	●	D20	7378674	**246,00**
DC160-05-13.494A1-WJ30ET	WJ30ET	1	●	D20	7377658	**296,00**
DC160-05-13.500A0-WJ30ET	WJ30ET	1	●	D20	7378675	**246,00**
DC160-05-13.500A1-WJ30ET	WJ30ET	1	●	D20	7377659	**296,00**
DC160-05-13.500F0-WJ30ET	WJ30ET	1	○	D20	7378676	**254,00**
DC160-05-13.500F1-WJ30ET	WJ30ET	1	●	D20	7377660	**305,00**
DC160-05-13.600A0-WJ30ET	WJ30ET	1	●	D20	7378677	**246,00**
DC160-05-13.600A1-WJ30ET	WJ30ET	1	●	D20	7377661	**296,00**
DC160-05-13.600F0-WJ30ET	WJ30ET	1	○	D20	7378678	**254,00**
DC160-05-13.600F1-WJ30ET	WJ30ET	1	○	D20	7377662	**305,00**
DC160-05-13.700A0-WJ30ET	WJ30ET	1	●	D20	7378679	**246,00**
DC160-05-13.700A1-WJ30ET	WJ30ET	1	●	D20	7377663	**296,00**
DC160-05-13.700F0-WJ30ET	WJ30ET	1	○	D20	7378680	**254,00**
DC160-05-13.700F1-WJ30ET	WJ30ET	1	●	D20	7377664	**305,00**
DC160-05-13.800A0-WJ30ET	WJ30ET	1	●	D20	7378681	**246,00**
DC160-05-13.800A1-WJ30ET	WJ30ET	1	●	D20	7377665	**296,00**
DC160-05-13.800F0-WJ30ET	WJ30ET	1	○	D20	7378682	**254,00**
DC160-05-13.800F1-WJ30ET	WJ30ET	1	●	D20	7377666	**305,00**
DC160-05-13.900A0-WJ30ET	WJ30ET	1	●	D20	7378683	**246,00**
DC160-05-13.900A1-WJ30ET	WJ30ET	1	●	D20	7377667	**296,00**
DC160-05-13.900F0-WJ30ET	WJ30ET	1	○	D20	7378684	**254,00**
DC160-05-13.900F1-WJ30ET	WJ30ET	1	○	D20	7377668	**305,00**
DC160-05-14.000A0-WJ30ET	WJ30ET	1	●	D20	7378685	**246,00**
DC160-05-14.000A1-WJ30ET	WJ30ET	1	●	D20	7377669	**296,00**
DC160-05-14.000F0-WJ30ET	WJ30ET	1	○	D20	7378686	**254,00**
DC160-05-14.000F1-WJ30ET	WJ30ET	1	●	D20	7377670	**305,00**

Bezeichnung / Designation	Sorte / Grade	VE / US		Disc. Gr.	Article No.	EURO Stück / piece
DC160-05-14.100A0-WJ30ET	WJ30ET	1	●	D20	7378687	**322,00**
DC160-05-14.100A1-WJ30ET	WJ30ET	1	●	D20	7377671	**387,00**
DC160-05-14.100F0-WJ30ET	WJ30ET	1	○	D20	7378688	**332,00**
DC160-05-14.100F1-WJ30ET	WJ30ET	1	●	D20	7377672	**398,00**
DC160-05-14.200A0-WJ30ET	WJ30ET	1	●	D20	7378689	**322,00**
DC160-05-14.200A1-WJ30ET	WJ30ET	1	●	D20	7377673	**387,00**
DC160-05-14.200F0-WJ30ET	WJ30ET	1	○	D20	7378690	**332,00**
DC160-05-14.200F1-WJ30ET	WJ30ET	1	●	D20	7377674	**398,00**
DC160-05-14.288A0-WJ30ET	WJ30ET	1	●	D20	7378691	**322,00**
DC160-05-14.288A1-WJ30ET	WJ30ET	1	●	D20	7377675	**387,00**
DC160-05-14.300A1-WJ30ET	WJ30ET	1	●	D20	7377676	**387,00**
DC160-05-14.300F0-WJ30ET	WJ30ET	1	○	D20	7378693	**332,00**
DC160-05-14.300F1-WJ30ET	WJ30ET	1	○	D20	7377677	**398,00**
DC160-05-14.400A1-WJ30ET	WJ30ET	1	●	D20	7377678	**387,00**
DC160-05-14.400F0-WJ30ET	WJ30ET	1	○	D20	7378695	**332,00**
DC160-05-14.400F1-WJ30ET	WJ30ET	1	●	D20	7377679	**398,00**
DC160-05-14.500A0-WJ30ET	WJ30ET	1	●	D20	7378696	**322,00**
DC160-05-14.500A1-WJ30ET	WJ30ET	1	●	D20	7377680	**387,00**
DC160-05-14.500F0-WJ30ET	WJ30ET	1	○	D20	7378697	**332,00**
DC160-05-14.500F1-WJ30ET	WJ30ET	1	●	D20	7377681	**398,00**
DC160-05-14.600A0-WJ30ET	WJ30ET	1	●	D20	7378698	**322,00**
DC160-05-14.600A1-WJ30ET	WJ30ET	1	●	D20	7377682	**387,00**
DC160-05-14.600F0-WJ30ET	WJ30ET	1	○	D20	7378699	**332,00**
DC160-05-14.600F1-WJ30ET	WJ30ET	1	○	D20	7377683	**398,00**
DC160-05-14.700A0-WJ30ET	WJ30ET	1	○	D20	7378700[2]	**322,00**
DC160-05-14.700A1-WJ30ET	WJ30ET	1	●	D20	7377684	**387,00**
DC160-05-14.700F0-WJ30ET	WJ30ET	1	○	D20	7378701	**332,00**
DC160-05-14.700F1-WJ30ET	WJ30ET	1	●	D20	7377685	**398,00**
DC160-05-14.750A0-WJ30ET	WJ30ET	1	●	D20	7378702	**322,00**
DC160-05-14.750A1-WJ30ET	WJ30ET	1	●	D20	7377686	**387,00**
DC160-05-14.750F0-WJ30ET	WJ30ET	1	○	D20	7378703	**332,00**
DC160-05-14.750F1-WJ30ET	WJ30ET	1	○	D20	7377687	**398,00**
DC160-05-14.800A0-WJ30ET	WJ30ET	1	●	D20	7378704	**322,00**
DC160-05-14.800A1-WJ30ET	WJ30ET	1	●	D20	7377688	**387,00**
DC160-05-14.800F0-WJ30ET	WJ30ET	1	○	D20	7378705	**332,00**
DC160-05-14.800F1-WJ30ET	WJ30ET	1	●	D20	7377689	**398,00**
DC160-05-14.900A1-WJ30ET	WJ30ET	1	●	D20	7377690	**387,00**
DC160-05-14.900F1-WJ30ET	WJ30ET	1	○	D20	7377691	**398,00**
DC160-05-15.000A0-WJ30ET	WJ30ET	1	●	D20	7378706	**322,00**
DC160-05-15.000A1-WJ30ET	WJ30ET	1	●	D20	7377692	**387,00**
DC160-05-15.000F0-WJ30ET	WJ30ET	1	○	D20	7378707	**332,00**
DC160-05-15.000F1-WJ30ET	WJ30ET	1	●	D20	7377693	**398,00**
DC160-05-15.100A0-WJ30ET	WJ30ET	1	●	D20	7378708	**322,00**
DC160-05-15.100A1-WJ30ET	WJ30ET	1	●	D20	7377694	**387,00**
DC160-05-15.100F0-WJ30ET	WJ30ET	1	○	D20	7378709	**332,00**
DC160-05-15.100F1-WJ30ET	WJ30ET	1	●	D20	7377695	**398,00**
DC160-05-15.200A0-WJ30ET	WJ30ET	1	●	D20	7378710	**322,00**
DC160-05-15.200A1-WJ30ET	WJ30ET	1	●	D20	7377696	**387,00**
DC160-05-15.200F0-WJ30ET	WJ30ET	1	○	D20	7378711	**332,00**
DC160-05-15.200F1-WJ30ET	WJ30ET	1	●	D20	7377697	**398,00**
DC160-05-15.300A0-WJ30ET	WJ30ET	1	●	D20	7378712	**322,00**
DC160-05-15.300A1-WJ30ET	WJ30ET	1	●	D20	7377698	**387,00**
DC160-05-15.300F0-WJ30ET	WJ30ET	1	○	D20	7378713	**332,00**
DC160-05-15.300F1-WJ30ET	WJ30ET	1	●	D20	7377699	**398,00**
DC160-05-15.400A1-WJ30ET	WJ30ET	1	●	D20	7377700	**387,00**
DC160-05-15.400F1-WJ30ET	WJ30ET	1	○	D20	7377701	**398,00**
DC160-05-15.500A0-WJ30ET	WJ30ET	1	●	D20	7378714	**322,00**
DC160-05-15.500A1-WJ30ET	WJ30ET	1	●	D20	7377702	**387,00**
DC160-05-15.500F0-WJ30ET	WJ30ET	1	○	D20	7378715	**332,00**
DC160-05-15.500F1-WJ30ET	WJ30ET	1	●	D20	7377703	**398,00**
DC160-05-15.600A1-WJ30ET	WJ30ET	1	●	D20	7377704	**387,00**
DC160-05-15.600F0-WJ30ET	WJ30ET	1	○	D20	7378717	**332,00**
DC160-05-15.600F1-WJ30ET	WJ30ET	1	○	D20	7377705	**398,00**
DC160-05-15.700A0-WJ30ET	WJ30ET	1	●	D20	7378718	**322,00**
DC160-05-15.700A1-WJ30ET	WJ30ET	1	●	D20	7377706	**387,00**
DC160-05-15.700F0-WJ30ET	WJ30ET	1	○	D20	7378719	**332,00**
DC160-05-15.700F1-WJ30ET	WJ30ET	1	●	D20	7377707	**398,00**
DC160-05-15.800A0-WJ30ET	WJ30ET	1	●	D20	7378720	**322,00**
DC160-05-15.800A1-WJ30ET	WJ30ET	1	●	D20	7377708	**387,00**
DC160-05-15.800F0-WJ30ET	WJ30ET	1	○	D20	7378721	**332,00**

Bezeichnung / Designation	Sorte / Grade	VE / US		Disc. Gr.	Article No.	EURO Stück / piece
DC160-05-15.800F1-WJ30ET	WJ30ET	1	●	D20	7377709	398,00
DC160-05-15.875A0-WJ30ET	WJ30ET	1	●	D20	7378722	322,00
DC160-05-15.875A1-WJ30ET	WJ30ET	1	●	D20	7377710	387,00
DC160-05-15.900A0-WJ30ET	WJ30ET	1	●	D20	7378723	322,00
DC160-05-15.900A1-WJ30ET	WJ30ET	1	●	D20	7377711	387,00
DC160-05-15.900F0-WJ30ET	WJ30ET	1	○	D20	7378724	332,00
DC160-05-15.900F1-WJ30ET	WJ30ET	1	○	D20	7377712	398,00
DC160-05-16.000A0-WJ30ET	WJ30ET	1	●	D20	7378725	322,00
DC160-05-16.000A1-WJ30ET	WJ30ET	1	●	D20	7377714	387,00
DC160-05-16.000F0-WJ30ET	WJ30ET	1	○	D20	7378726	332,00
DC160-05-16.000F1-WJ30ET	WJ30ET	1	●	D20	7377715	398,00
DC160-05-16.100A0-WJ30ET	WJ30ET	1	●	D20	7378727	407,00
DC160-05-16.100A1-WJ30ET	WJ30ET	1	●	D20	7377716	489,00
DC160-05-16.100F0-WJ30ET	WJ30ET	1	○	D20	7378728	420,00
DC160-05-16.100F1-WJ30ET	WJ30ET	1	●	D20	7377717	504,00
DC160-05-16.200A1-WJ30ET	WJ30ET	1	●	D20	7377718	489,00
DC160-05-16.200F0-WJ30ET	WJ30ET	1	○	D20	7378730	420,00
DC160-05-16.200F1-WJ30ET	WJ30ET	1	●	D20	7377719	504,00
DC160-05-16.300A0-WJ30ET	WJ30ET	1	○	D20	7378731*	407,00
DC160-05-16.300A1-WJ30ET	WJ30ET	1	●	D20	7377720	489,00
DC160-05-16.300F0-WJ30ET	WJ30ET	1	○	D20	7378732	420,00
DC160-05-16.300F1-WJ30ET	WJ30ET	1	○	D20	7377721	504,00
DC160-05-16.400A1-WJ30ET	WJ30ET	1	●	D20	7377722	489,00
DC160-05-16.400F0-WJ30ET	WJ30ET	1	○	D20	7378734	420,00
DC160-05-16.400F1-WJ30ET	WJ30ET	1	○	D20	7377723	504,00
DC160-05-16.500A0-WJ30ET	WJ30ET	1	●	D20	7378735	407,00
DC160-05-16.500A1-WJ30ET	WJ30ET	1	●	D20	7377724	489,00
DC160-05-16.500F0-WJ30ET	WJ30ET	1	○	D20	7378736	420,00
DC160-05-16.500F1-WJ30ET	WJ30ET	1	●	D20	7377725	504,00
DC160-05-16.600A0-WJ30ET	WJ30ET	1	●	D20	7378737	407,00
DC160-05-16.600A1-WJ30ET	WJ30ET	1	●	D20	7377726	489,00
DC160-05-16.600F0-WJ30ET	WJ30ET	1	○	D20	7378738	420,00
DC160-05-16.600F1-WJ30ET	WJ30ET	1	○	D20	7377727	504,00
DC160-05-16.700A0-WJ30ET	WJ30ET	1	●	D20	7378739	407,00
DC160-05-16.700A1-WJ30ET	WJ30ET	1	●	D20	7377728	489,00
DC160-05-16.700F0-WJ30ET	WJ30ET	1	○	D20	7378740	420,00
DC160-05-16.700F1-WJ30ET	WJ30ET	1	○	D20	7377729	504,00
DC160-05-16.750A0-WJ30ET	WJ30ET	1	●	D20	7378741	407,00
DC160-05-16.750A1-WJ30ET	WJ30ET	1	●	D20	7377730	489,00
DC160-05-16.750F0-WJ30ET	WJ30ET	1	○	D20	7378742	420,00
DC160-05-16.750F1-WJ30ET	WJ30ET	1	○	D20	7377731	504,00
DC160-05-16.800A0-WJ30ET	WJ30ET	1	●	D20	7378743	407,00
DC160-05-16.800A1-WJ30ET	WJ30ET	1	●	D20	7377732	489,00
DC160-05-16.800F0-WJ30ET	WJ30ET	1	○	D20	7378744	420,00
DC160-05-16.800F1-WJ30ET	WJ30ET	1	○	D20	7377733	504,00
DC160-05-16.900A1-WJ30ET	WJ30ET	1	●	D20	7377734	489,00
DC160-05-16.900F1-WJ30ET	WJ30ET	1	○	D20	7377735	504,00
DC160-05-17.000A0-WJ30ET	WJ30ET	1	●	D20	7378745	407,00
DC160-05-17.000A1-WJ30ET	WJ30ET	1	●	D20	7377736	489,00
DC160-05-17.000F0-WJ30ET	WJ30ET	1	○	D20	7378746	420,00
DC160-05-17.000F1-WJ30ET	WJ30ET	1	●	D20	7377737	504,00
DC160-05-17.100A1-WJ30ET	WJ30ET	1	●	D20	7377738	489,00
DC160-05-17.100F1-WJ30ET	WJ30ET	1	○	D20	7377739	504,00
DC160-05-17.200A1-WJ30ET	WJ30ET	1	●	D20	7377740	489,00
DC160-05-17.200F0-WJ30ET	WJ30ET	1	○	D20	7378748	420,00
DC160-05-17.200F1-WJ30ET	WJ30ET	1	●	D20	7377741	504,00
DC160-05-17.300A1-WJ30ET	WJ30ET	1	●	D20	7377742	489,00
DC160-05-17.300F0-WJ30ET	WJ30ET	1	○	D20	7378750	420,00
DC160-05-17.300F1-WJ30ET	WJ30ET	1	●	D20	7377743	504,00
DC160-05-17.400A1-WJ30ET	WJ30ET	1	●	D20	7377744	489,00
DC160-05-17.400F1-WJ30ET	WJ30ET	1	○	D20	7377745	504,00
DC160-05-17.500A0-WJ30ET	WJ30ET	1	●	D20	7378751	407,00
DC160-05-17.500A1-WJ30ET	WJ30ET	1	●	D20	7377746	489,00
DC160-05-17.500F0-WJ30ET	WJ30ET	1	○	D20	7378752	420,00
DC160-05-17.500F1-WJ30ET	WJ30ET	1	●	D20	7377747	504,00
DC160-05-17.600A1-WJ30ET	WJ30ET	1	●	D20	7377748	489,00
DC160-05-17.600F0-WJ30ET	WJ30ET	1	○	D20	7378754	420,00
DC160-05-17.600F1-WJ30ET	WJ30ET	1	○	D20	7377749	504,00
DC160-05-17.700A0-WJ30ET	WJ30ET	1	●	D20	7378755	407,00
DC160-05-17.700A1-WJ30ET	WJ30ET	1	●	D20	7377750	489,00

Bezeichnung / Designation	Sorte / Grade	VE / US		Disc. Gr.	Article No.	EURO Stück / piece
DC160-05-17.700F0-WJ30ET	WJ30ET	1	○	D20	7378756	420,00
DC160-05-17.700F1-WJ30ET	WJ30ET	1	●	D20	7377751	504,00
DC160-05-17.800A0-WJ30ET	WJ30ET	1	●	D20	7378757	407,00
DC160-05-17.800A1-WJ30ET	WJ30ET	1	●	D20	7377752	489,00
DC160-05-17.800F0-WJ30ET	WJ30ET	1	○	D20	7378758	420,00
DC160-05-17.800F1-WJ30ET	WJ30ET	1	●	D20	7377753	504,00
DC160-05-17.900A1-WJ30ET	WJ30ET	1	●	D20	7377754	489,00
DC160-05-17.900F1-WJ30ET	WJ30ET	1	○	D20	7377755	504,00
DC160-05-18.000A0-WJ30ET	WJ30ET	1	●	D20	7378759	407,00
DC160-05-18.000A1-WJ30ET	WJ30ET	1	●	D20	7377756	489,00
DC160-05-18.000F0-WJ30ET	WJ30ET	1	○	D20	7378760	420,00
DC160-05-18.000F1-WJ30ET	WJ30ET	1	●	D20	7377757	504,00
DC160-05-18.100A1-WJ30ET	WJ30ET	1	●	D20	7377758	592,00
DC160-05-18.100F1-WJ30ET	WJ30ET	1	●	D20	7377759	609,00
DC160-05-18.200A0-WJ30ET	WJ30ET	1	●	D20	7378761	493,00
DC160-05-18.200A1-WJ30ET	WJ30ET	1	●	D20	7377760	592,00
DC160-05-18.200F0-WJ30ET	WJ30ET	1	○	D20	7378762	508,00
DC160-05-18.200F1-WJ30ET	WJ30ET	1	○	D20	7377761	609,00
DC160-05-18.300A1-WJ30ET	WJ30ET	1	●	D20	7377762	592,00
DC160-05-18.300F1-WJ30ET	WJ30ET	1	○	D20	7377763	609,00
DC160-05-18.400A1-WJ30ET	WJ30ET	1	●	D20	7377764	592,00
DC160-05-18.400F1-WJ30ET	WJ30ET	1	○	D20	7377765	609,00
DC160-05-18.500A1-WJ30ET	WJ30ET	1	●	D20	7377766	592,00
DC160-05-18.500F0-WJ30ET	WJ30ET	1	○	D20	7378764	508,00
DC160-05-18.500F1-WJ30ET	WJ30ET	1	●	D20	7377767	609,00
DC160-05-18.600A1-WJ30ET	WJ30ET	1	●	D20	7377768	592,00
DC160-05-18.600F1-WJ30ET	WJ30ET	1	○	D20	7377769	609,00
DC160-05-18.700A0-WJ30ET	WJ30ET	1	●	D20	7378765	493,00
DC160-05-18.700A1-WJ30ET	WJ30ET	1	●	D20	7377770	592,00
DC160-05-18.700F0-WJ30ET	WJ30ET	1	○	D20	7378766	508,00
DC160-05-18.700F1-WJ30ET	WJ30ET	1	○	D20	7377771	609,00
DC160-05-18.800A0-WJ30ET	WJ30ET	1	●	D20	7378767	493,00
DC160-05-18.800A1-WJ30ET	WJ30ET	1	●	D20	7377772	592,00
DC160-05-18.800F0-WJ30ET	WJ30ET	1	○	D20	7378768	508,00
DC160-05-18.800F1-WJ30ET	WJ30ET	1	○	D20	7377773	609,00
DC160-05-18.900A1-WJ30ET	WJ30ET	1	●	D20	7377774	592,00
DC160-05-18.900F1-WJ30ET	WJ30ET	1	○	D20	7377775	609,00
DC160-05-19.000A0-WJ30ET	WJ30ET	1	●	D20	7378769	493,00
DC160-05-19.000A1-WJ30ET	WJ30ET	1	●	D20	7377776	592,00
DC160-05-19.000F0-WJ30ET	WJ30ET	1	○	D20	7378770	508,00
DC160-05-19.000F1-WJ30ET	WJ30ET	1	●	D20	7377777	609,00
DC160-05-19.050A0-WJ30ET	WJ30ET	1	●	D20	7378771	493,00
DC160-05-19.050A1-WJ30ET	WJ30ET	1	●	D20	7377778	592,00
DC160-05-19.100A1-WJ30ET	WJ30ET	1	●	D20	7377779	592,00
DC160-05-19.100F1-WJ30ET	WJ30ET	1	○	D20	7377780	609,00
DC160-05-19.200A1-WJ30ET	WJ30ET	1	●	D20	7377781	592,00
DC160-05-19.200F1-WJ30ET	WJ30ET	1	○	D20	7377782	609,00
DC160-05-19.300A1-WJ30ET	WJ30ET	1	●	D20	7377783	592,00
DC160-05-19.300F1-WJ30ET	WJ30ET	1	○	D20	7377784	609,00
DC160-05-19.400A1-WJ30ET	WJ30ET	1	○	D20	7377785*	592,00
DC160-05-19.400F1-WJ30ET	WJ30ET	1	○	D20	7377786	609,00
DC160-05-19.500A1-WJ30ET	WJ30ET	1	●	D20	7377787	592,00
DC160-05-19.500F0-WJ30ET	WJ30ET	1	○	D20	7378773	508,00
DC160-05-19.500F1-WJ30ET	WJ30ET	1	●	D20	7377788	609,00
DC160-05-19.600A1-WJ30ET	WJ30ET	1	●	D20	7377789	592,00
DC160-05-19.600F1-WJ30ET	WJ30ET	1	○	D20	7377790	609,00
DC160-05-19.700A1-WJ30ET	WJ30ET	1	●	D20	7377791	592,00
DC160-05-19.700F0-WJ30ET	WJ30ET	1	○	D20	7378775	508,00
DC160-05-19.700F1-WJ30ET	WJ30ET	1	●	D20	7377792	609,00
DC160-05-19.800A1-WJ30ET	WJ30ET	1	●	D20	7377793	592,00
DC160-05-19.800F0-WJ30ET	WJ30ET	1	○	D20	7378777	508,00
DC160-05-19.800F1-WJ30ET	WJ30ET	1	○	D20	7377794	609,00
DC160-05-19.900A1-WJ30ET	WJ30ET	1	●	D20	7377795	592,00
DC160-05-19.900F1-WJ30ET	WJ30ET	1	○	D20	7377796	609,00
DC160-05-20.000A0-WJ30ET	WJ30ET	1	●	D20	7378778	493,00
DC160-05-20.000A1-WJ30ET	WJ30ET	1	●	D20	7377797	592,00
DC160-05-20.000F0-WJ30ET	WJ30ET	1	○	D20	7378779	508,00
DC160-05-20.000F1-WJ30ET	WJ30ET	1	●	D20	7377798	609,00
DC160-05-20.500A0-WJ30ET	WJ30ET	1	●	D20	7378780	663,00
DC160-05-20.500A1-WJ30ET	WJ30ET	1	●	D20	7377799	796,00

Bezeichnung / Designation	Sorte / Grade	VE / US		Disc. Gr.	Article No.	EURO Stück / piece
DC160-05-20.500F0-WJ30ET	WJ30ET	1	○	D20	7378781	683,00
DC160-05-20.500F1-WJ30ET	WJ30ET	1	●	D20	7377800	820,00
DC160-05-21.000A0-WJ30ET	WJ30ET	1	●	D20	7378782	663,00
DC160-05-21.000A1-WJ30ET	WJ30ET	1	●	D20	7377801	796,00
DC160-05-21.000F0-WJ30ET	WJ30ET	1	○	D20	7378783	683,00
DC160-05-21.000F1-WJ30ET	WJ30ET	1	●	D20	7377802	820,00
DC160-05-21.500A0-WJ30ET	WJ30ET	1	●	D20	7378784	663,00
DC160-05-21.500A1-WJ30ET	WJ30ET	1	●	D20	7377803	796,00
DC160-05-21.500F0-WJ30ET	WJ30ET	1	○	D20	7378785	683,00
DC160-05-21.500F1-WJ30ET	WJ30ET	1	○	D20	7377804	820,00
DC160-05-22.000A0-WJ30ET	WJ30ET	1	●	D20	7378786	663,00
DC160-05-22.000A1-WJ30ET	WJ30ET	1	●	D20	7377805	796,00
DC160-05-22.000F0-WJ30ET	WJ30ET	1	○	D20	7378787	683,00
DC160-05-22.000F1-WJ30ET	WJ30ET	1	●	D20	7377806	820,00
DC160-05-22.500A0-WJ30ET	WJ30ET	1	●	D20	7378788	663,00
DC160-05-22.500A1-WJ30ET	WJ30ET	1	●	D20	7377807	796,00
DC160-05-22.500F0-WJ30ET	WJ30ET	1	○	D20	7378789	683,00
DC160-05-22.500F1-WJ30ET	WJ30ET	1	○	D20	7377808	820,00
DC160-05-23.000A0-WJ30ET	WJ30ET	1	●	D20	7378790	663,00
DC160-05-23.000A1-WJ30ET	WJ30ET	1	●	D20	7377809	796,00
DC160-05-23.000F0-WJ30ET	WJ30ET	1	○	D20	7378791	683,00
DC160-05-23.000F1-WJ30ET	WJ30ET	1	○	D20	7377810	820,00
DC160-05-23.500A0-WJ30ET	WJ30ET	1	●	D20	7378792	663,00
DC160-05-23.500A1-WJ30ET	WJ30ET	1	●	D20	7377811	796,00
DC160-05-23.500F0-WJ30ET	WJ30ET	1	○	D20	7378793	683,00
DC160-05-23.500F1-WJ30ET	WJ30ET	1	○	D20	7377812	820,00
DC160-05-24.000A0-WJ30ET	WJ30ET	1	●	D20	7378794	663,00
DC160-05-24.000A1-WJ30ET	WJ30ET	1	●	D20	7377813	796,00
DC160-05-24.000F0-WJ30ET	WJ30ET	1	○	D20	7378795	683,00
DC160-05-24.000F1-WJ30ET	WJ30ET	1	●	D20	7377814	820,00
DC160-05-24.500A0-WJ30ET	WJ30ET	1	●	D20	7378796	663,00
DC160-05-24.500A1-WJ30ET	WJ30ET	1	●	D20	7377815	796,00
DC160-05-24.500F0-WJ30ET	WJ30ET	1	○	D20	7378797	683,00
DC160-05-24.500F1-WJ30ET	WJ30ET	1	○	D20	7377816	820,00
DC160-05-25.000A0-WJ30ET	WJ30ET	1	●	D20	7378798	663,00
DC160-05-25.000A1-WJ30ET	WJ30ET	1	●	D20	7377817	796,00
DC160-05-25.000F0-WJ30ET	WJ30ET	1	○	D20	7378799	683,00
DC160-05-25.000F1-WJ30ET	WJ30ET	1	●	D20	7377818	820,00
DC160-08-03.000A1-WJ30ET	WJ30ET	1	●	D21	7377819	182,00
DC160-08-03.100A1-WJ30ET	WJ30ET	1	●	D21	7377820	182,00
DC160-08-03.175A1-WJ30ET	WJ30ET	1	●	D21	7377821	182,00
DC160-08-03.200A1-WJ30ET	WJ30ET	1	●	D21	7377822	182,00
DC160-08-03.300A1-WJ30ET	WJ30ET	1	●	D21	7377823	182,00
DC160-08-03.400A1-WJ30ET	WJ30ET	1	●	D21	7377824	182,00
DC160-08-03.500A1-WJ30ET	WJ30ET	1	●	D21	7377825	182,00
DC160-08-03.572A1-WJ30ET	WJ30ET	1	●	D21	7377826	182,00
DC160-08-03.600A1-WJ30ET	WJ30ET	1	●	D21	7377827	182,00
DC160-08-03.700A1-WJ30ET	WJ30ET	1	●	D21	7377828	182,00
DC160-08-03.800A1-WJ30ET	WJ30ET	1	●	D21	7377829	182,00
DC160-08-03.900A1-WJ30ET	WJ30ET	1	●	D21	7377830	182,00
DC160-08-03.969A1-WJ30ET	WJ30ET	1	●	D21	7377831	182,00
DC160-08-04.000A1-WJ30ET	WJ30ET	1	●	D21	7377832	182,00
DC160-08-04.100A1-WJ30ET	WJ30ET	1	●	D21	7377833	182,00
DC160-08-04.200A1-WJ30ET	WJ30ET	1	●	D21	7377834	182,00
DC160-08-04.300A1-WJ30ET	WJ30ET	1	●	D21	7377835	182,00
DC160-08-04.366A1-WJ30ET	WJ30ET	1	●	D21	7377836	182,00
DC160-08-04.400A1-WJ30ET	WJ30ET	1	●	D21	7377837	182,00
DC160-08-04.500A1-WJ30ET	WJ30ET	1	●	D21	7377838	182,00
DC160-08-04.600A1-WJ30ET	WJ30ET	1	●	D21	7377839	182,00
DC160-08-04.700A1-WJ30ET	WJ30ET	1	●	D21	7377840	182,00
DC160-08-04.763A1-WJ30ET	WJ30ET	1	●	D21	7377841	182,00
DC160-08-04.800A1-WJ30ET	WJ30ET	1	●	D21	7377842	182,00
DC160-08-04.900A1-WJ30ET	WJ30ET	1	●	D21	7377843	182,00
DC160-08-05.000A1-WJ30ET	WJ30ET	1	●	D21	7377844	182,00
DC160-08-05.100A1-WJ30ET	WJ30ET	1	●	D21	7377845	182,00
DC160-08-05.159A1-WJ30ET	WJ30ET	1	●	D21	7377846	182,00
DC160-08-05.200A1-WJ30ET	WJ30ET	1	●	D21	7377847	182,00
DC160-08-05.300A1-WJ30ET	WJ30ET	1	●	D21	7377848	182,00
DC160-08-05.400A1-WJ30ET	WJ30ET	1	●	D21	7377849	182,00
DC160-08-05.500A1-WJ30ET	WJ30ET	1	●	D21	7377850	182,00

Bezeichnung / Designation	Sorte / Grade	VE / US		Disc. Gr.	Article No.	EURO Stück / piece
DC160-08-05.556A1-WJ30ET	WJ30ET	1	●	D21	7377851	182,00
DC160-08-05.600A1-WJ30ET	WJ30ET	1	●	D21	7377852	182,00
DC160-08-05.700A1-WJ30ET	WJ30ET	1	●	D21	7377853	182,00
DC160-08-05.800A1-WJ30ET	WJ30ET	1	●	D21	7377854	182,00
DC160-08-05.900A1-WJ30ET	WJ30ET	1	●	D21	7377855	182,00
DC160-08-05.953A1-WJ30ET	WJ30ET	1	●	D21	7377856	182,00
DC160-08-06.000A1-WJ30ET	WJ30ET	1	●	D21	7377857	182,00
DC160-08-06.100A1-WJ30ET	WJ30ET	1	●	D21	7377858	218,00
DC160-08-06.200A1-WJ30ET	WJ30ET	1	●	D21	7377859	218,00
DC160-08-06.300A1-WJ30ET	WJ30ET	1	●	D21	7377860	218,00
DC160-08-06.350A1-WJ30ET	WJ30ET	1	●	D21	7377861	218,00
DC160-08-06.400A1-WJ30ET	WJ30ET	1	●	D21	7377862	218,00
DC160-08-06.500A1-WJ30ET	WJ30ET	1	●	D21	7377863	218,00
DC160-08-06.600A1-WJ30ET	WJ30ET	1	●	D21	7377864	218,00
DC160-08-06.700A1-WJ30ET	WJ30ET	1	●	D21	7377865	218,00
DC160-08-06.747A1-WJ30ET	WJ30ET	1	●	D21	7377866	218,00
DC160-08-06.800A1-WJ30ET	WJ30ET	1	●	D21	7377867	218,00
DC160-08-06.900A1-WJ30ET	WJ30ET	1	●	D21	7377868	218,00
DC160-08-07.000A1-WJ30ET	WJ30ET	1	●	D21	7377869	218,00
DC160-08-07.100A1-WJ30ET	WJ30ET	1	●	D21	7377870	218,00
DC160-08-07.144A1-WJ30ET	WJ30ET	1	●	D21	7377871	218,00
DC160-08-07.200A1-WJ30ET	WJ30ET	1	●	D21	7377872	218,00
DC160-08-07.300A1-WJ30ET	WJ30ET	1	●	D21	7377873	218,00
DC160-08-07.400A1-WJ30ET	WJ30ET	1	●	D21	7377874	218,00
DC160-08-07.500A1-WJ30ET	WJ30ET	1	●	D21	7377875	218,00
DC160-08-07.541A1-WJ30ET	WJ30ET	1	●	D21	7377876	218,00
DC160-08-07.600A1-WJ30ET	WJ30ET	1	●	D21	7377877	218,00
DC160-08-07.700A1-WJ30ET	WJ30ET	1	●	D21	7377878	218,00
DC160-08-07.800A1-WJ30ET	WJ30ET	1	●	D21	7377879	218,00
DC160-08-07.900A1-WJ30ET	WJ30ET	1	●	D21	7377880	218,00
DC160-08-07.938A1-WJ30ET	WJ30ET	1	●	D21	7377881	218,00
DC160-08-08.000A1-WJ30ET	WJ30ET	1	●	D21	7377882	218,00
DC160-08-08.100A1-WJ30ET	WJ30ET	1	●	D21	7377883	255,00
DC160-08-08.200A1-WJ30ET	WJ30ET	1	●	D21	7377884	255,00
DC160-08-08.300A1-WJ30ET	WJ30ET	1	●	D21	7377885	255,00
DC160-08-08.334A1-WJ30ET	WJ30ET	1	●	D21	7377886	255,00
DC160-08-08.400A1-WJ30ET	WJ30ET	1	●	D21	7377887	255,00
DC160-08-08.500A1-WJ30ET	WJ30ET	1	●	D21	7377888	255,00
DC160-08-08.600A1-WJ30ET	WJ30ET	1	●	D21	7377889	255,00
DC160-08-08.700A1-WJ30ET	WJ30ET	1	●	D21	7377890	255,00
DC160-08-08.731A1-WJ30ET	WJ30ET	1	●	D21	7377891	255,00
DC160-08-08.800A1-WJ30ET	WJ30ET	1	●	D21	7377892	255,00
DC160-08-08.900A1-WJ30ET	WJ30ET	1	●	D21	7377893	255,00
DC160-08-09.000A1-WJ30ET	WJ30ET	1	●	D21	7377894	255,00
DC160-08-09.100A1-WJ30ET	WJ30ET	1	●	D21	7377895	255,00
DC160-08-09.128A1-WJ30ET	WJ30ET	1	●	D21	7377896	255,00
DC160-08-09.200A1-WJ30ET	WJ30ET	1	●	D21	7377897	255,00
DC160-08-09.300A1-WJ30ET	WJ30ET	1	●	D21	7377898	255,00
DC160-08-09.400A1-WJ30ET	WJ30ET	1	●	D21	7377899	255,00
DC160-08-09.500A1-WJ30ET	WJ30ET	1	●	D21	7377900	255,00
DC160-08-09.525A1-WJ30ET	WJ30ET	1	●	D21	7377901	255,00
DC160-08-09.600A1-WJ30ET	WJ30ET	1	●	D21	7377902	255,00
DC160-08-09.700A1-WJ30ET	WJ30ET	1	●	D21	7377903	255,00
DC160-08-09.800A1-WJ30ET	WJ30ET	1	●	D21	7377904	255,00
DC160-08-09.900A1-WJ30ET	WJ30ET	1	●	D21	7377905	255,00
DC160-08-09.922A1-WJ30ET	WJ30ET	1	●	D21	7377906	255,00
DC160-08-10.000A1-WJ30ET	WJ30ET	1	●	D21	7377907	255,00
DC160-08-10.100A1-WJ30ET	WJ30ET	1	●	D21	7377908	346,00
DC160-08-10.200A1-WJ30ET	WJ30ET	1	●	D21	7377909	346,00
DC160-08-10.300A1-WJ30ET	WJ30ET	1	●	D21	7377910	346,00
DC160-08-10.319A1-WJ30ET	WJ30ET	1	●	D21	7377911	346,00
DC160-08-10.400A1-WJ30ET	WJ30ET	1	●	D21	7377912	346,00
DC160-08-10.500A1-WJ30ET	WJ30ET	1	●	D21	7377913	346,00
DC160-08-10.600A1-WJ30ET	WJ30ET	1	●	D21	7377914	346,00
DC160-08-10.700A1-WJ30ET	WJ30ET	1	●	D21	7377915	346,00
DC160-08-10.716A1-WJ30ET	WJ30ET	1	●	D21	7377916	346,00
DC160-08-10.800A1-WJ30ET	WJ30ET	1	●	D21	7377917	346,00
DC160-08-10.900A1-WJ30ET	WJ30ET	1	●	D21	7377918	346,00
DC160-08-11.000A1-WJ30ET	WJ30ET	1	●	D21	7377919	346,00
DC160-08-11.100A1-WJ30ET	WJ30ET	1	●	D21	7377920	346,00

Bezeichnung / Designation	Sorte / Grade	VE / US		Disc. Gr.	Article No.	EURO Stück / piece
DC160-08-11.113A1-WJ30ET	WJ30ET	1	●	D21	7377921	346,00
DC160-08-11.200A1-WJ30ET	WJ30ET	1	●	D21	7377922	346,00
DC160-08-11.300A1-WJ30ET	WJ30ET	1	●	D21	7377923	346,00
DC160-08-11.400A1-WJ30ET	WJ30ET	1	●	D21	7377924	346,00
DC160-08-11.500A1-WJ30ET	WJ30ET	1	●	D21	7377925	346,00
DC160-08-11.509A1-WJ30ET	WJ30ET	1	●	D21	7377926	346,00
DC160-08-11.600A1-WJ30ET	WJ30ET	1	●	D21	7377927	346,00
DC160-08-11.700A1-WJ30ET	WJ30ET	1	●	D21	7377928	346,00
DC160-08-11.800A1-WJ30ET	WJ30ET	1	●	D21	7377929	346,00
DC160-08-11.900A1-WJ30ET	WJ30ET	1	●	D21	7377930	346,00
DC160-08-11.906A1-WJ30ET	WJ30ET	1	●	D21	7377931	346,00
DC160-08-12.000A1-WJ30ET	WJ30ET	1	●	D21	7377932	346,00
DC160-08-12.303A1-WJ30ET	WJ30ET	1	●	D21	7377933	473,00
DC160-08-12.500A1-WJ30ET	WJ30ET	1	●	D21	7377934	473,00
DC160-08-12.700A1-WJ30ET	WJ30ET	1	●	D21	7377935	473,00
DC160-08-13.000A1-WJ30ET	WJ30ET	1	●	D21	7377936	473,00
DC160-08-13.494A1-WJ30ET	WJ30ET	1	●	D21	7377937	473,00
DC160-08-13.500A1-WJ30ET	WJ30ET	1	●	D21	7377938	473,00
DC160-08-14.000A1-WJ30ET	WJ30ET	1	●	D21	7377939	473,00
DC160-08-14.288A1-WJ30ET	WJ30ET	1	●	D21	7377940	619,00
DC160-08-14.500A1-WJ30ET	WJ30ET	1	●	D21	7377941	619,00
DC160-08-15.000A1-WJ30ET	WJ30ET	1	●	D21	7377942	619,00
DC160-08-15.500A1-WJ30ET	WJ30ET	1	●	D21	7377943	619,00
DC160-08-15.875A1-WJ30ET	WJ30ET	1	●	D21	7377944	619,00
DC160-08-16.000A1-WJ30ET	WJ30ET	1	●	D21	7377945	619,00
DC160-08-16.500A1-WJ30ET	WJ30ET	1	●	D21	7377946	783,00
DC160-08-17.000A1-WJ30ET	WJ30ET	1	●	D21	7377947	783,00
DC160-08-17.500A1-WJ30ET	WJ30ET	1	●	D21	7377948	783,00
DC160-08-18.000A1-WJ30ET	WJ30ET	1	●	D21	7377949	783,00
DC160-08-18.500A1-WJ30ET	WJ30ET	1	●	D21	7377950	947,00
DC160-08-19.000A1-WJ30ET	WJ30ET	1	●	D21	7377951	947,00
DC160-08-19.050A1-WJ30ET	WJ30ET	1	●	D21	7377952	947,00
DC160-08-19.500A1-WJ30ET	WJ30ET	1	●	D21	7377953	947,00
DC160-08-20.000A1-WJ30ET	WJ30ET	1	●	D21	7377954	947,00
DC160-12-03.000A1-WJ30EU	WJ30EU	1	●	D21	7378800	210,00
DC160-12-03.100A1-WJ30EU	WJ30EU	1	●	D21	7378801	210,00
DC160-12-03.175A1-WJ30EU	WJ30EU	1	●	D21	7378802	210,00
DC160-12-03.200A1-WJ30EU	WJ30EU	1	●	D21	7378803	210,00
DC160-12-03.300A1-WJ30EU	WJ30EU	1	●	D21	7378804	210,00
DC160-12-03.400A1-WJ30EU	WJ30EU	1	●	D21	7378805	210,00
DC160-12-03.500A1-WJ30EU	WJ30EU	1	●	D21	7378806	210,00
DC160-12-03.572A1-WJ30EU	WJ30EU	1	●	D21	7378807	210,00
DC160-12-03.600A1-WJ30EU	WJ30EU	1	●	D21	7378808	210,00
DC160-12-03.700A1-WJ30EU	WJ30EU	1	●	D21	7378809	210,00
DC160-12-03.800A1-WJ30EU	WJ30EU	1	●	D21	7378810	210,00
DC160-12-03.900A1-WJ30EU	WJ30EU	1	●	D21	7378811	210,00
DC160-12-03.969A1-WJ30EU	WJ30EU	1	●	D21	7378812	210,00
DC160-12-04.000A1-WJ30EU	WJ30EU	1	●	D21	7378813	210,00
DC160-12-04.100A1-WJ30EU	WJ30EU	1	●	D21	7378814	210,00
DC160-12-04.200A1-WJ30EU	WJ30EU	1	●	D21	7378815	210,00
DC160-12-04.300A1-WJ30EU	WJ30EU	1	●	D21	7378816	210,00
DC160-12-04.366A1-WJ30EU	WJ30EU	1	●	D21	7378817	210,00
DC160-12-04.400A1-WJ30EU	WJ30EU	1	●	D21	7378818	210,00
DC160-12-04.500A1-WJ30EU	WJ30EU	1	●	D21	7378819	210,00
DC160-12-04.600A1-WJ30EU	WJ30EU	1	●	D21	7378820	210,00
DC160-12-04.700A1-WJ30EU	WJ30EU	1	●	D21	7378821	210,00
DC160-12-04.763A1-WJ30EU	WJ30EU	1	●	D21	7378822	210,00
DC160-12-04.800A1-WJ30EU	WJ30EU	1	●	D21	7378823	210,00
DC160-12-04.900A1-WJ30EU	WJ30EU	1	●	D21	7378824	210,00
DC160-12-05.000A1-WJ30EU	WJ30EU	1	●	D21	7378825	210,00
DC160-12-05.100A1-WJ30EU	WJ30EU	1	●	D21	7378826	210,00
DC160-12-05.159A1-WJ30EU	WJ30EU	1	●	D21	7378827	210,00
DC160-12-05.200A1-WJ30EU	WJ30EU	1	●	D21	7378828	210,00
DC160-12-05.300A1-WJ30EU	WJ30EU	1	●	D21	7378829	210,00
DC160-12-05.400A1-WJ30EU	WJ30EU	1	●	D21	7378830	210,00
DC160-12-05.500A1-WJ30EU	WJ30EU	1	●	D21	7378831	210,00
DC160-12-05.550A1-WJ30EU	WJ30EU	1	●	D21	7378832	210,00
DC160-12-05.556A1-WJ30EU	WJ30EU	1	●	D21	7378833	210,00
DC160-12-05.600A1-WJ30EU	WJ30EU	1	●	D21	7378834	210,00
DC160-12-05.700A1-WJ30EU	WJ30EU	1	●	D21	7378835	210,00

Bezeichnung / Designation	Sorte / Grade	VE / US		Disc. Gr.	Article No.	EURO Stück / piece
DC160-12-05.800A1-WJ30EU	WJ30EU	1	●	D21	7378836	210,00
DC160-12-05.900A1-WJ30EU	WJ30EU	1	●	D21	7378837	210,00
DC160-12-06.000A1-WJ30EU	WJ30EU	1	●	D21	7378838	210,00
DC160-12-06.100A1-WJ30EU	WJ30EU	1	●	D21	7378839	253,00
DC160-12-06.200A1-WJ30EU	WJ30EU	1	●	D21	7378840	253,00
DC160-12-06.300A1-WJ30EU	WJ30EU	1	●	D21	7378841	253,00
DC160-12-06.350A1-WJ30EU	WJ30EU	1	●	D21	7378842	253,00
DC160-12-06.400A1-WJ30EU	WJ30EU	1	●	D21	7378843	253,00
DC160-12-06.500A1-WJ30EU	WJ30EU	1	●	D21	7378844	253,00
DC160-12-06.600A1-WJ30EU	WJ30EU	1	●	D21	7378845	253,00
DC160-12-06.700A1-WJ30EU	WJ30EU	1	●	D21	7378846	253,00
DC160-12-06.747A1-WJ30EU	WJ30EU	1	●	D21	7378847	253,00
DC160-12-06.800A1-WJ30EU	WJ30EU	1	●	D21	7378848	253,00
DC160-12-06.900A1-WJ30EU	WJ30EU	1	●	D21	7378849	253,00
DC160-12-07.000A1-WJ30EU	WJ30EU	1	●	D21	7378850	253,00
DC160-12-07.100A1-WJ30EU	WJ30EU	1	●	D21	7378851	253,00
DC160-12-07.144A1-WJ30EU	WJ30EU	1	●	D21	7378852	253,00
DC160-12-07.200A1-WJ30EU	WJ30EU	1	●	D21	7378853	253,00
DC160-12-07.300A1-WJ30EU	WJ30EU	1	●	D21	7378854	253,00
DC160-12-07.400A1-WJ30EU	WJ30EU	1	●	D21	7378855	253,00
DC160-12-07.500A1-WJ30EU	WJ30EU	1	●	D21	7378856	253,00
DC160-12-07.541A1-WJ30EU	WJ30EU	1	●	D21	7378857	253,00
DC160-12-07.800A1-WJ30EU	WJ30EU	1	●	D21	7378858	253,00
DC160-12-07.900A1-WJ30EU	WJ30EU	1	●	D21	7378859	253,00
DC160-12-07.938A1-WJ30EU	WJ30EU	1	●	D21	7378860	253,00
DC160-12-08.000A1-WJ30EU	WJ30EU	1	●	D21	7378861	253,00
DC160-12-08.100A1-WJ30EU	WJ30EU	1	●	D21	7378862	295,00
DC160-12-08.200A1-WJ30EU	WJ30EU	1	●	D21	7378863	295,00
DC160-12-08.300A1-WJ30EU	WJ30EU	1	●	D21	7378864	295,00
DC160-12-08.400A1-WJ30EU	WJ30EU	1	●	D21	7378865	295,00
DC160-12-08.500A1-WJ30EU	WJ30EU	1	●	D21	7378866	295,00
DC160-12-08.600A1-WJ30EU	WJ30EU	1	●	D21	7378867	295,00
DC160-12-08.700A1-WJ30EU	WJ30EU	1	●	D21	7378868	295,00
DC160-12-08.731A1-WJ30EU	WJ30EU	1	●	D21	7378869	295,00
DC160-12-08.800A1-WJ30EU	WJ30EU	1	●	D21	7378870	295,00
DC160-12-09.000A1-WJ30EU	WJ30EU	1	●	D21	7378871	295,00
DC160-12-09.128A1-WJ30EU	WJ30EU	1	●	D21	7378872	295,00
DC160-12-09.200A1-WJ30EU	WJ30EU	1	●	D21	7378873	295,00
DC160-12-09.300A1-WJ30EU	WJ30EU	1	●	D21	7378874	295,00
DC160-12-09.500A1-WJ30EU	WJ30EU	1	●	D21	7378875	295,00
DC160-12-09.525A1-WJ30EU	WJ30EU	1	●	D21	7378876	295,00
DC160-12-09.600A1-WJ30EU	WJ30EU	1	●	D21	7378877	295,00
DC160-12-09.700A1-WJ30EU	WJ30EU	1	●	D21	7378878	295,00
DC160-12-09.800A1-WJ30EU	WJ30EU	1	●	D21	7378879	295,00
DC160-12-09.922A1-WJ30EU	WJ30EU	1	●	D21	7378880	295,00
DC160-12-10.000A1-WJ30EU	WJ30EU	1	●	D21	7378881	295,00
DC160-12-10.100A1-WJ30EU	WJ30EU	1	●	D21	7378882	400,00
DC160-12-10.200A1-WJ30EU	WJ30EU	1	●	D21	7378883	400,00
DC160-12-10.300A1-WJ30EU	WJ30EU	1	●	D21	7378884	400,00
DC160-12-10.319A1-WJ30EU	WJ30EU	1	●	D21	7378885	400,00
DC160-12-10.400A1-WJ30EU	WJ30EU	1	●	D21	7378886	400,00
DC160-12-10.500A1-WJ30EU	WJ30EU	1	●	D21	7378887	400,00
DC160-12-10.716A1-WJ30EU	WJ30EU	1	●	D21	7378888	400,00
DC160-12-10.800A1-WJ30EU	WJ30EU	1	●	D21	7378889	400,00
DC160-12-11.000A1-WJ30EU	WJ30EU	1	●	D21	7378890	400,00
DC160-12-11.100A1-WJ30EU	WJ30EU	1	●	D21	7378891	400,00
DC160-12-11.113A1-WJ30EU	WJ30EU	1	●	D21	7378892	400,00
DC160-12-11.200A1-WJ30EU	WJ30EU	1	●	D21	7378893	400,00
DC160-12-11.500A1-WJ30EU	WJ30EU	1	●	D21	7378894	400,00
DC160-12-11.509A1-WJ30EU	WJ30EU	1	●	D21	7378895	400,00
DC160-12-11.700A1-WJ30EU	WJ30EU	1	●	D21	7378896	400,00
DC160-12-11.800A1-WJ30EU	WJ30EU	1	●	D21	7378897	400,00
DC160-12-11.906A1-WJ30EU	WJ30EU	1	●	D21	7378898	400,00
DC160-12-12.000A1-WJ30EU	WJ30EU	1	●	D21	7378899	400,00
DC160-12-12.100A1-WJ30EU	WJ30EU	1	●	D21	7378900	547,00
DC160-12-12.200A1-WJ30EU	WJ30EU	1	●	D21	7378901	547,00
DC160-12-12.300A1-WJ30EU	WJ30EU	1	●	D21	7378902	547,00
DC160-12-12.303A1-WJ30EU	WJ30EU	1	●	D21	7378903	547,00
DC160-12-12.500A1-WJ30EU	WJ30EU	1	●	D21	7378904	547,00
DC160-12-12.600A1-WJ30EU	WJ30EU	1	●	D21	7378905	547,00

Bezeichnung / Designation	Sorte / Grade	VE / US		Disc. Gr.	Article No.	EURO Stück / piece
DC160-12-12.700A1-WJ30EU	WJ30EU	1	●	D21	7378906	**547,00**
DC160-12-13.000A1-WJ30EU	WJ30EU	1	●	D21	7378907	**547,00**
DC160-12-13.494A1-WJ30EU	WJ30EU	1	●	D21	7378908	**547,00**
DC160-12-13.500A1-WJ30EU	WJ30EU	1	●	D21	7378909	**547,00**
DC160-12-14.000A1-WJ30EU	WJ30EU	1	●	D21	7378910	**547,00**
DC160-12-14.288A1-WJ30EU	WJ30EU	1	●	D21	7378911	**716,00**
DC160-12-14.500A1-WJ30EU	WJ30EU	1	●	D21	7378912	**716,00**
DC160-12-15.000A1-WJ30EU	WJ30EU	1	●	D21	7378913	**716,00**
DC160-12-15.500A1-WJ30EU	WJ30EU	1	●	D21	7378914	**716,00**
DC160-12-15.875A1-WJ30EU	WJ30EU	1	●	D21	7378915	**716,00**
DC160-12-16.000A1-WJ30EU	WJ30EU	1	●	D21	7378916	**716,00**
DC160-12-16.500A1-WJ30EU	WJ30EU	1	●	D21	7378917	**905,00**
DC160-12-17.000A1-WJ30EU	WJ30EU	1	●	D21	7378918	**905,00**
DC160-12-17.500A1-WJ30EU	WJ30EU	1	●	D21	7378919	**905,00**
DC160-12-18.000A1-WJ30EU	WJ30EU	1	●	D21	7378920	**905,00**
DC160-12-18.500A1-WJ30EU	WJ30EU	1	●	D21	7378921	**1.094,00**
DC160-12-19.000A1-WJ30EU	WJ30EU	1	●	D21	7378922	**1.094,00**
DC160-12-19.500A1-WJ30EU	WJ30EU	1	●	D21	7378923	**1.094,00**
DC160-12-20.000A1-WJ30EU	WJ30EU	1	●	D21	7378924	**1.094,00**
DC160-16-03.000A1-WJ30EU	WJ30EU	1	●	D22	7684214	**223,00**
DC160-16-03.175A1-WJ30EU	WJ30EU	1	●	D22	7684215	**223,00**
DC160-16-03.500A1-WJ30EU	WJ30EU	1	●	D22	7684216	**223,00**
DC160-16-03.572A1-WJ30EU	WJ30EU	1	●	D22	7684217	**223,00**
DC160-16-03.969A1-WJ30EU	WJ30EU	1	●	D22	7684218	**223,00**
DC160-16-04.000A1-WJ30EU	WJ30EU	1	●	D22	7684219	**223,00**
DC160-16-04.500A1-WJ30EU	WJ30EU	1	●	D22	7684250	**236,00**
DC160-16-04.763A1-WJ30EU	WJ30EU	1	●	D22	7684251	**236,00**
DC160-16-04.800A1-WJ30EU	WJ30EU	1	●	D22	7684252	**236,00**
DC160-16-05.000A1-WJ30EU	WJ30EU	1	●	D22	7684253	**236,00**
DC160-16-05.500A1-WJ30EU	WJ30EU	1	●	D22	7684254	**248,00**
DC160-16-05.556A1-WJ30EU	WJ30EU	1	●	D22	7684255	**248,00**
DC160-16-05.800A1-WJ30EU	WJ30EU	1	●	D22	7684256	**248,00**
DC160-16-06.000A1-WJ30EU	WJ30EU	1	●	D22	7684257	**248,00**
DC160-16-06.100A1-WJ30EU	WJ30EU	1	●	D22	7684258	**298,00**
DC160-16-06.350A1-WJ30EU	WJ30EU	1	●	D22	7684259	**298,00**
DC160-16-06.500A1-WJ30EU	WJ30EU	1	●	D22	7684260	**298,00**
DC160-16-06.800A1-WJ30EU	WJ30EU	1	●	D22	7684261	**298,00**
DC160-16-07.000A1-WJ30EU	WJ30EU	1	●	D22	7684262	**298,00**
DC160-16-07.144A1-WJ30EU	WJ30EU	1	●	D22	7684263	**298,00**
DC160-16-07.400A1-WJ30EU	WJ30EU	1	●	D22	7684264	**298,00**
DC160-16-07.500A1-WJ30EU	WJ30EU	1	●	D22	7684265	**298,00**
DC160-16-07.938A1-WJ30EU	WJ30EU	1	●	D22	7684266	**298,00**
DC160-16-08.000A1-WJ30EU	WJ30EU	1	●	D22	7684267	**298,00**
DC160-16-08.300A1-WJ30EU	WJ30EU	1	●	D22	7684268	**347,00**
DC160-16-08.500A1-WJ30EU	WJ30EU	1	●	D22	7684269	**347,00**
DC160-16-08.731A1-WJ30EU	WJ30EU	1	●	D22	7684270	**347,00**
DC160-16-09.000A1-WJ30EU	WJ30EU	1	●	D22	7684271	**347,00**
DC160-16-09.525A1-WJ30EU	WJ30EU	1	●	D22	7684272	**347,00**
DC160-16-09.800A1-WJ30EU	WJ30EU	1	●	D22	7684273	**347,00**
DC160-16-10.000A1-WJ30EU	WJ30EU	1	●	D22	7684274	**347,00**
DC160-16-10.200A1-WJ30EU	WJ30EU	1	●	D22	7684275	**471,00**
DC160-16-10.319A1-WJ30EU	WJ30EU	1	●	D22	7684276	**471,00**
DC160-16-11.000A1-WJ30EU	WJ30EU	1	●	D22	7684277	**471,00**
DC160-16-11.113A1-WJ30EU	WJ30EU	1	●	D22	7684278	**471,00**
DC160-16-11.500A1-WJ30EU	WJ30EU	1	●	D22	7684279	**471,00**
DC160-16-11.800A1-WJ30EU	WJ30EU	1	●	D22	7684280	**471,00**
DC160-16-11.906A1-WJ30EU	WJ30EU	1	●	D22	7684281	**471,00**
DC160-16-12.000A1-WJ30EU	WJ30EU	1	●	D22	7684282	**471,00**
DC160-16-12.700A1-WJ30EU	WJ30EU	1	●	D22	7684283	**645,00**
DC160-16-13.000A1-WJ30EU	WJ30EU	1	●	D22	7684284	**645,00**
DC160-16-14.000A1-WJ30EU	WJ30EU	1	●	D22	7684285	**645,00**
DC160-16-14.288A1-WJ30EU	WJ30EU	1	●	D22	7684286	**843,00**
DC160-16-15.000A1-WJ30EU	WJ30EU	1	●	D22	7684287	**843,00**
DC160-16-16.000A1-WJ30EU	WJ30EU	1	●	D22	7684288	**843,00**
DC160-20-03.000A1-WJ30EU	WJ30EU	1	●	D22	7684289	**264,00**
DC160-20-03.175A1-WJ30EU	WJ30EU	1	●	D22	7684290	**264,00**
DC160-20-03.500A1-WJ30EU	WJ30EU	1	●	D22	7684291	**264,00**
DC160-20-03.572A1-WJ30EU	WJ30EU	1	●	D22	7684292	**264,00**
DC160-20-03.969A1-WJ30EU	WJ30EU	1	●	D22	7684293	**264,00**
DC160-20-04.000A1-WJ30EU	WJ30EU	1	●	D22	7684294	**264,00**

Bezeichnung / Designation	Sorte / Grade	VE / US		Disc. Gr.	Article No.	EURO Stück / piece
DC160-20-04.500A1-WJ30EU	WJ30EU	1	●	D22	7684295	**279,00**
DC160-20-04.763A1-WJ30EU	WJ30EU	1	●	D22	7684296	**279,00**
DC160-20-04.800A1-WJ30EU	WJ30EU	1	●	D22	7684297	**279,00**
DC160-20-05.000A1-WJ30EU	WJ30EU	1	●	D22	7684298	**279,00**
DC160-20-05.500A1-WJ30EU	WJ30EU	1	●	D22	7684299	**294,00**
DC160-20-05.556A1-WJ30EU	WJ30EU	1	●	D22	7684300	**294,00**
DC160-20-05.800A1-WJ30EU	WJ30EU	1	●	D22	7684301	**294,00**
DC160-20-06.000A1-WJ30EU	WJ30EU	1	●	D22	7684302	**294,00**
DC160-20-06.100A1-WJ30EU	WJ30EU	1	●	D22	7684303	**352,00**
DC160-20-06.350A1-WJ30EU	WJ30EU	1	●	D22	7684304	**352,00**
DC160-20-06.500A1-WJ30EU	WJ30EU	1	●	D22	7684305	**352,00**
DC160-20-06.800A1-WJ30EU	WJ30EU	1	●	D22	7684306	**352,00**
DC160-20-07.000A1-WJ30EU	WJ30EU	1	●	D22	7684307	**352,00**
DC160-20-07.144A1-WJ30EU	WJ30EU	1	●	D22	7684308	**352,00**
DC160-20-07.400A1-WJ30EU	WJ30EU	1	●	D22	7684309	**352,00**
DC160-20-07.500A1-WJ30EU	WJ30EU	1	●	D22	7684310	**352,00**
DC160-20-07.938A1-WJ30EU	WJ30EU	1	●	D22	7684311	**352,00**
DC160-20-08.000A1-WJ30EU	WJ30EU	1	●	D22	7684312	**352,00**
DC160-20-08.300A1-WJ30EU	WJ30EU	1	●	D22	7684313	**411,00**
DC160-20-08.500A1-WJ30EU	WJ30EU	1	●	D22	7684314	**411,00**
DC160-20-08.731A1-WJ30EU	WJ30EU	1	●	D22	7684315	**411,00**
DC160-20-09.000A1-WJ30EU	WJ30EU	1	●	D22	7684316	**411,00**
DC160-20-09.525A1-WJ30EU	WJ30EU	1	●	D22	7684317	**411,00**
DC160-20-09.800A1-WJ30EU	WJ30EU	1	●	D22	7684318	**411,00**
DC160-20-10.000A1-WJ30EU	WJ30EU	1	●	D22	7684319	**411,00**
DC160-20-10.200A1-WJ30EU	WJ30EU	1	●	D22	7684320	**558,00**
DC160-20-10.319A1-WJ30EU	WJ30EU	1	●	D22	7684321	**558,00**
DC160-20-11.000A1-WJ30EU	WJ30EU	1	●	D22	7684322	**558,00**
DC160-20-11.113A1-WJ30EU	WJ30EU	1	●	D22	7684323	**558,00**
DC160-20-11.500A1-WJ30EU	WJ30EU	1	●	D22	7684324	**558,00**
DC160-20-11.800A1-WJ30EU	WJ30EU	1	●	D22	7684325	**558,00**
DC160-20-11.906A1-WJ30EU	WJ30EU	1	●	D22	7684326	**558,00**
DC160-20-12.000A1-WJ30EU	WJ30EU	1	●	D22	7684327	**558,00**
DC160-20-12.700A1-WJ30EU	WJ30EU	1	●	D22	7684328	**763,00**
DC160-20-13.000A1-WJ30EU	WJ30EU	1	●	D22	7684329	**763,00**
DC160-20-14.000A1-WJ30EU	WJ30EU	1	●	D22	7684330	**763,00**
DC160-20-14.288A1-WJ30EU	WJ30EU	1	●	D22	7684331	**998,00**
DC160-20-15.000A1-WJ30EU	WJ30EU	1	●	D22	7684332	**998,00**
DC160-20-16.000A1-WJ30EU	WJ30EU	1	●	D22	7684333	**998,00**
DC160-25-03.000A1-WJ30EU	WJ30EU	1	●	D22	7684334	**319,00**
DC160-25-03.175A1-WJ30EU	WJ30EU	1	●	D22	7684335	**319,00**
DC160-25-03.500A1-WJ30EU	WJ30EU	1	●	D22	7684336	**319,00**
DC160-25-03.572A1-WJ30EU	WJ30EU	1	●	D22	7684337	**319,00**
DC160-25-03.969A1-WJ30EU	WJ30EU	1	●	D22	7684338	**319,00**
DC160-25-04.000A1-WJ30EU	WJ30EU	1	●	D22	7684339	**319,00**
DC160-25-04.500A1-WJ30EU	WJ30EU	1	●	D22	7684340	**337,00**
DC160-25-04.763A1-WJ30EU	WJ30EU	1	●	D22	7684341	**337,00**
DC160-25-04.800A1-WJ30EU	WJ30EU	1	●	D22	7684342	**337,00**
DC160-25-05.000A1-WJ30EU	WJ30EU	1	●	D22	7684343	**337,00**
DC160-25-05.500A1-WJ30EU	WJ30EU	1	●	D22	7684344	**355,00**
DC160-25-05.556A1-WJ30EU	WJ30EU	1	●	D22	7684345	**355,00**
DC160-25-05.800A1-WJ30EU	WJ30EU	1	●	D22	7684346	**355,00**
DC160-25-06.000A1-WJ30EU	WJ30EU	1	●	D22	7684347	**355,00**
DC160-25-06.100A1-WJ30EU	WJ30EU	1	●	D22	7684348	**426,00**
DC160-25-06.350A1-WJ30EU	WJ30EU	1	●	D22	7684349	**426,00**
DC160-25-06.500A1-WJ30EU	WJ30EU	1	●	D22	7684350	**426,00**
DC160-25-06.800A1-WJ30EU	WJ30EU	1	●	D22	7684351	**426,00**
DC160-25-07.000A1-WJ30EU	WJ30EU	1	●	D22	7684352	**426,00**
DC160-25-07.144A1-WJ30EU	WJ30EU	1	●	D22	7684353	**426,00**
DC160-25-07.400A1-WJ30EU	WJ30EU	1	●	D22	7684354	**426,00**
DC160-25-07.500A1-WJ30EU	WJ30EU	1	●	D22	7684355	**426,00**
DC160-25-07.938A1-WJ30EU	WJ30EU	1	●	D22	7684356	**426,00**
DC160-25-08.000A1-WJ30EU	WJ30EU	1	●	D22	7684357	**426,00**
DC160-25-08.300A1-WJ30EU	WJ30EU	1	●	D22	7684358	**497,00**
DC160-25-08.500A1-WJ30EU	WJ30EU	1	●	D22	7684359	**497,00**
DC160-25-08.731A1-WJ30EU	WJ30EU	1	●	D22	7684360	**497,00**
DC160-25-09.000A1-WJ30EU	WJ30EU	1	●	D22	7684361	**497,00**
DC160-25-09.525A1-WJ30EU	WJ30EU	1	●	D22	7684362	**497,00**
DC160-25-09.800A1-WJ30EU	WJ30EU	1	●	D22	7684363	**497,00**
DC160-25-10.000A1-WJ30EU	WJ30EU	1	●	D22	7684364	**497,00**

Bezeichnung / Designation	Sorte / Grade	VE / US		Disc. Gr.	Article No.	EURO Stück / piece
DC160-25-10.200A1-WJ30EU	WJ30EU	1	●	D22	7684365	674,00
DC160-25-10.319A1-WJ30EU	WJ30EU	1	●	D22	7684366	674,00
DC160-25-11.000A1-WJ30EU	WJ30EU	1	●	D22	7684367	674,00
DC160-25-11.113A1-WJ30EU	WJ30EU	1	●	D22	7684368	674,00
DC160-25-11.500A1-WJ30EU	WJ30EU	1	●	D22	7684369	674,00
DC160-25-11.800A1-WJ30EU	WJ30EU	1	●	D22	7684370	674,00
DC160-25-11.906A1-WJ30EU	WJ30EU	1	●	D22	7684371	674,00
DC160-25-12.000A1-WJ30EU	WJ30EU	1	●	D22	7684372	674,00
DC160-30-03.000A1-WJ30EU	WJ30EU	1	●	D22	7684373	377,00
DC160-30-03.175A1-WJ30EU	WJ30EU	1	●	D22	7684374	377,00
DC160-30-03.500A1-WJ30EU	WJ30EU	1	●	D22	7684375	377,00
DC160-30-03.572A1-WJ30EU	WJ30EU	1	●	D22	7684376	377,00
DC160-30-03.969A1-WJ30EU	WJ30EU	1	●	D22	7684377	377,00
DC160-30-04.000A1-WJ30EU	WJ30EU	1	●	D22	7684378	377,00
DC160-30-04.500A1-WJ30EU	WJ30EU	1	●	D22	7684379	398,00
DC160-30-04.763A1-WJ30EU	WJ30EU	1	●	D22	7684380	398,00
DC160-30-04.800A1-WJ30EU	WJ30EU	1	●	D22	7684381	398,00
DC160-30-05.000A1-WJ30EU	WJ30EU	1	●	D22	7684382	398,00
DC160-30-05.500A1-WJ30EU	WJ30EU	1	●	D22	7684383	419,00
DC160-30-05.556A1-WJ30EU	WJ30EU	1	●	D22	7684384	419,00
DC160-30-05.800A1-WJ30EU	WJ30EU	1	●	D22	7684385	419,00
DC160-30-06.000A1-WJ30EU	WJ30EU	1	●	D22	7684386	419,00
DC160-30-06.100A1-WJ30EU	WJ30EU	1	●	D22	7684387	502,00
DC160-30-06.350A1-WJ30EU	WJ30EU	1	●	D22	7684388	502,00
DC160-30-06.500A1-WJ30EU	WJ30EU	1	●	D22	7684389	502,00
DC160-30-06.800A1-WJ30EU	WJ30EU	1	●	D22	7684390	502,00
DC160-30-07.000A1-WJ30EU	WJ30EU	1	●	D22	7684391	502,00
DC160-30-07.144A1-WJ30EU	WJ30EU	1	●	D22	7684392	502,00
DC160-30-07.400A1-WJ30EU	WJ30EU	1	●	D22	7684393	502,00
DC160-30-07.500A1-WJ30EU	WJ30EU	1	●	D22	7684394	502,00
DC160-30-07.938A1-WJ30EU	WJ30EU	1	●	D22	7684395	502,00
DC160-30-08.000A1-WJ30EU	WJ30EU	1	●	D22	7684396	502,00
DC160-30-08.300A1-WJ30EU	WJ30EU	1	●	D22	7684397	586,00
DC160-30-08.500A1-WJ30EU	WJ30EU	1	●	D22	7684398	586,00
DC160-30-08.731A1-WJ30EU	WJ30EU	1	●	D22	7684399	586,00
DC160-30-09.000A1-WJ30EU	WJ30EU	1	●	D22	7684400	586,00
DC160-30-09.525A1-WJ30EU	WJ30EU	1	●	D22	7684401	586,00
DC160-30-09.800A1-WJ30EU	WJ30EU	1	●	D22	7684402	586,00
DC160-30-10.000A1-WJ30EU	WJ30EU	1	●	D22	7684403	586,00
DC160-30-10.200A1-WJ30EU	WJ30EU	1	●	D22	7684404	795,00
DC160-30-10.319A1-WJ30EU	WJ30EU	1	●	D22	7684405	795,00
DC160-30-11.000A1-WJ30EU	WJ30EU	1	●	D22	7684406	795,00
DC160-30-11.113A1-WJ30EU	WJ30EU	1	●	D22	7684407	795,00
DC160-30-11.500A1-WJ30EU	WJ30EU	1	●	D22	7684408	795,00
DC160-30-11.800A1-WJ30EU	WJ30EU	1	●	D22	7684409	795,00
DC160-30-11.906A1-WJ30EU	WJ30EU	1	●	D22	7684410	795,00
DC160-30-12.000A1-WJ30EU	WJ30EU	1	●	D22	7684411	795,00
DC165-05-04.000A1-WJ30UU	WJ30UU	1	●	D20	8098098	95,80
DC165-05-05.000A1-WJ30UU	WJ30UU	1	●	D20	8098099	95,80
DC165-05-06.000A1-WJ30UU	WJ30UU	1	●	D20	8098100	95,80
DC165-05-08.000A1-WJ30UU	WJ30UU	1	●	D20	8098101	115,00
DC165-05-08.500A1-WJ30UU	WJ30UU	1	●	D20	8098102	134,00
DC165-05-10.000A1-WJ30UU	WJ30UU	1	●	D20	8098103	134,00
DC165-05-10.200A1-WJ30UU	WJ30UU	1	●	D20	8098104	182,00
DC165-05-11.000A1-WJ30UU	WJ30UU	1	●	D20	8098105	182,00
DC165-05-12.000A1-WJ30UU	WJ30UU	1	●	D20	8098106	182,00
DC165-05-14.000A1-WJ30UU	WJ30UU	1	●	D20	8098107	249,00
DC165-05-15.000A1-WJ30UU	WJ30UU	1	●	D20	8098108	326,00
DC165-05-16.000A1-WJ30UU	WJ30UU	1	●	D20	8098109	326,00
DC166-05-03.000A1-WJ30UU	WJ30UU	1	●	D30	8337944	111,00
DC166-05-04.000A1-WJ30UU	WJ30UU	1	●	D30	8337945	111,00
DC166-05-04.200A1-WJ30UU	WJ30UU	1	●	D30	8337946	111,00
DC166-05-05.000A1-WJ30UU	WJ30UU	1	●	D30	8337947	111,00
DC166-05-06.000A1-WJ30UU	WJ30UU	1	●	D30	8337948	111,00
DC166-05-06.800A1-WJ30UU	WJ30UU	1	●	D30	8337949	133,00
DC166-05-07.500A1-WJ30UU	WJ30UU	1	●	D30	8338410	133,00
DC166-05-08.000A1-WJ30UU	WJ30UU	1	●	D30	8338411	133,00
DC166-05-08.500A1-WJ30UU	WJ30UU	1	●	D30	8338412	155,00
DC166-05-09.300A1-WJ30UU	WJ30UU	1	●	D30	8338413	155,00
DC166-05-10.000A1-WJ30UU	WJ30UU	1	●	D30	8338414	155,00

Bezeichnung / Designation	Sorte / Grade	VE / US		Disc. Gr.	Article No.	EURO Stück / piece
DC166-05-10.200A1-WJ30UU	WJ30UU	1	●	D30	8338415	211,00
DC166-05-12.000A1-WJ30UU	WJ30UU	1	●	D30	8338416	211,00
DC170-03-03.000A1-WJ30EJ	WJ30EJ	1	●	D30	6745058	114,00
DC170-03-03.100A1-WJ30EJ	WJ30EJ	1	●	D30	6745059	114,00
DC170-03-03.175A1-WJ30EJ	WJ30EJ	1	●	D30	6745060	114,00
DC170-03-03.200A1-WJ30EJ	WJ30EJ	1	●	D30	6745061	114,00
DC170-03-03.300A1-WJ30EJ	WJ30EJ	1	●	D30	6745062	114,00
DC170-03-03.400A1-WJ30EJ	WJ30EJ	1	●	D30	6745063	114,00
DC170-03-03.500A1-WJ30EJ	WJ30EJ	1	●	D30	6745064	114,00
DC170-03-03.572A1-WJ30EJ	WJ30EJ	1	●	D30	6745065	114,00
DC170-03-03.600A1-WJ30EJ	WJ30EJ	1	●	D30	6745066	114,00
DC170-03-03.700A1-WJ30EJ	WJ30EJ	1	●	D30	6745067	114,00
DC170-03-03.800A1-WJ30EJ	WJ30EJ	1	●	D30	6745068	114,00
DC170-03-03.900A1-WJ30EJ	WJ30EJ	1	●	D30	6745069	114,00
DC170-03-03.969A1-WJ30EJ	WJ30EJ	1	●	D30	6745070	114,00
DC170-03-04.000A1-WJ30EJ	WJ30EJ	1	●	D30	6745071	114,00
DC170-03-04.100A1-WJ30EJ	WJ30EJ	1	●	D30	6745072	114,00
DC170-03-04.200A1-WJ30EJ	WJ30EJ	1	●	D30	6745073	114,00
DC170-03-04.300A1-WJ30EJ	WJ30EJ	1	●	D30	6745074	114,00
DC170-03-04.366A1-WJ30EJ	WJ30EJ	1	●	D30	6745075	114,00
DC170-03-04.400A1-WJ30EJ	WJ30EJ	1	●	D30	6745076	114,00
DC170-03-04.500A1-WJ30EJ	WJ30EJ	1	●	D30	6745077	114,00
DC170-03-04.600A1-WJ30EJ	WJ30EJ	1	●	D30	6745078	114,00
DC170-03-04.650A1-WJ30EJ	WJ30EJ	1	●	D30	6745079	114,00
DC170-03-04.700A1-WJ30EJ	WJ30EJ	1	●	D30	6745080	114,00
DC170-03-04.763A1-WJ30EJ	WJ30EJ	1	●	D30	6745081	114,00
DC170-03-04.800A1-WJ30EJ	WJ30EJ	1	●	D30	6745082	114,00
DC170-03-04.900A1-WJ30EJ	WJ30EJ	1	●	D30	6745083	114,00
DC170-03-05.000A1-WJ30EJ	WJ30EJ	1	●	D30	6745084	114,00
DC170-03-05.100A1-WJ30EJ	WJ30EJ	1	●	D30	6745085	114,00
DC170-03-05.159A1-WJ30EJ	WJ30EJ	1	●	D30	6745086	114,00
DC170-03-05.200A1-WJ30EJ	WJ30EJ	1	●	D30	6745087	114,00
DC170-03-05.300A1-WJ30EJ	WJ30EJ	1	●	D30	6745088	114,00
DC170-03-05.400A1-WJ30EJ	WJ30EJ	1	●	D30	6745089	114,00
DC170-03-05.500A1-WJ30EJ	WJ30EJ	1	●	D30	6745090	114,00
DC170-03-05.550A1-WJ30EJ	WJ30EJ	1	●	D30	6745091	114,00
DC170-03-05.556A1-WJ30EJ	WJ30EJ	1	●	D30	6745092	114,00
DC170-03-05.600A1-WJ30EJ	WJ30EJ	1	●	D30	6745093	114,00
DC170-03-05.700A1-WJ30EJ	WJ30EJ	1	●	D30	6745094	114,00
DC170-03-05.800A1-WJ30EJ	WJ30EJ	1	●	D30	6745095	114,00
DC170-03-05.900A1-WJ30EJ	WJ30EJ	1	●	D30	6745096	114,00
DC170-03-05.953A1-WJ30EJ	WJ30EJ	1	○	D30	6745097*	114,00
DC170-03-06.000A1-WJ30EJ	WJ30EJ	1	●	D30	6745098	114,00
DC170-03-06.100A1-WJ30EJ	WJ30EJ	1	●	D30	6745099	137,00
DC170-03-06.200A1-WJ30EJ	WJ30EJ	1	●	D30	6745100	137,00
DC170-03-06.300A1-WJ30EJ	WJ30EJ	1	●	D30	6745101	137,00
DC170-03-06.350A1-WJ30EJ	WJ30EJ	1	●	D30	6745102	137,00
DC170-03-06.400A1-WJ30EJ	WJ30EJ	1	●	D30	6745103	137,00
DC170-03-06.500A1-WJ30EJ	WJ30EJ	1	●	D30	6745104	137,00
DC170-03-06.600A1-WJ30EJ	WJ30EJ	1	●	D30	6745105	137,00
DC170-03-06.700A1-WJ30EJ	WJ30EJ	1	●	D30	6745106	137,00
DC170-03-06.747A1-WJ30EJ	WJ30EJ	1	●	D30	6745107	137,00
DC170-03-06.800A1-WJ30EJ	WJ30EJ	1	●	D30	6745108	137,00
DC170-03-06.900A1-WJ30EJ	WJ30EJ	1	●	D30	6745109	137,00
DC170-03-07.000A1-WJ30EJ	WJ30EJ	1	●	D30	6745110	137,00
DC170-03-07.100A1-WJ30EJ	WJ30EJ	1	●	D30	6745111	137,00
DC170-03-07.144A1-WJ30EJ	WJ30EJ	1	●	D30	6745112	137,00
DC170-03-07.200A1-WJ30EJ	WJ30EJ	1	●	D30	6745113	137,00
DC170-03-07.300A1-WJ30EJ	WJ30EJ	1	●	D30	6745114	137,00
DC170-03-07.400A1-WJ30EJ	WJ30EJ	1	●	D30	6745115	137,00
DC170-03-07.500A1-WJ30EJ	WJ30EJ	1	●	D30	6745116	137,00
DC170-03-07.541A1-WJ30EJ	WJ30EJ	1	●	D30	6745117	137,00
DC170-03-07.800A1-WJ30EJ	WJ30EJ	1	●	D30	6745118	137,00
DC170-03-07.900A1-WJ30EJ	WJ30EJ	1	●	D30	6745119	137,00
DC170-03-07.938A1-WJ30EJ	WJ30EJ	1	●	D30	6745120	137,00
DC170-03-08.000A1-WJ30EJ	WJ30EJ	1	●	D30	6745121	137,00
DC170-03-08.100A1-WJ30EJ	WJ30EJ	1	●	D30	6745122	160,00
DC170-03-08.200A1-WJ30EJ	WJ30EJ	1	●	D30	6745123	160,00
DC170-03-08.300A1-WJ30EJ	WJ30EJ	1	●	D30	6745124	160,00
DC170-03-08.500A1-WJ30EJ	WJ30EJ	1	●	D30	6745127	160,00

Bezeichnung / Designation	Sorte / Grade	VE / US		Disc. Gr.	Article No.	EURO Stück / piece
DC170-03-08.600A1-WJ30EJ	WJ30EJ	1	●	D30	6745128	160,00
DC170-03-08.700A1-WJ30EJ	WJ30EJ	1	●	D30	6745129	160,00
DC170-03-08.731A1-WJ30EJ	WJ30EJ	1	●	D30	6745130	160,00
DC170-03-08.800A1-WJ30EJ	WJ30EJ	1	●	D30	6745131	160,00
DC170-03-09.000A1-WJ30EJ	WJ30EJ	1	●	D30	6745132	160,00
DC170-03-09.128A1-WJ30EJ	WJ30EJ	1	●	D30	6745133	160,00
DC170-03-09.200A1-WJ30EJ	WJ30EJ	1	●	D30	6745134	160,00
DC170-03-09.300A1-WJ30EJ	WJ30EJ	1	●	D30	6745135	160,00
DC170-03-09.500A1-WJ30EJ	WJ30EJ	1	●	D30	6745136	160,00
DC170-03-09.525A1-WJ30EJ	WJ30EJ	1	●	D30	6745137	160,00
DC170-03-09.600A1-WJ30EJ	WJ30EJ	1	●	D30	6745138	160,00
DC170-03-09.700A1-WJ30EJ	WJ30EJ	1	○	D30	6745139*	160,00
DC170-03-09.800A1-WJ30EJ	WJ30EJ	1	●	D30	6745140	160,00
DC170-03-09.922A1-WJ30EJ	WJ30EJ	1	●	D30	6745141	160,00
DC170-03-10.000A1-WJ30EJ	WJ30EJ	1	●	D30	6745142	160,00
DC170-03-10.100A1-WJ30EJ	WJ30EJ	1	●	D30	6745143	217,00
DC170-03-10.200A1-WJ30EJ	WJ30EJ	1	●	D30	6745144	217,00
DC170-03-10.300A1-WJ30EJ	WJ30EJ	1	●	D30	6745145	217,00
DC170-03-10.319A1-WJ30EJ	WJ30EJ	1	●	D30	6745146	217,00
DC170-03-10.400A1-WJ30EJ	WJ30EJ	1	●	D30	6745147	217,00
DC170-03-10.500A1-WJ30EJ	WJ30EJ	1	●	D30	6745148	217,00
DC170-03-10.716A1-WJ30EJ	WJ30EJ	1	●	D30	6745149	217,00
DC170-03-10.800A1-WJ30EJ	WJ30EJ	1	●	D30	6745150	217,00
DC170-03-11.000A1-WJ30EJ	WJ30EJ	1	●	D30	6745151	217,00
DC170-03-11.100A1-WJ30EJ	WJ30EJ	1	●	D30	6745152	217,00
DC170-03-11.113A1-WJ30EJ	WJ30EJ	1	●	D30	6745153	217,00
DC170-03-11.200A1-WJ30EJ	WJ30EJ	1	●	D30	6745154	217,00
DC170-03-11.500A1-WJ30EJ	WJ30EJ	1	●	D30	6745155	217,00
DC170-03-11.509A1-WJ30EJ	WJ30EJ	1	●	D30	6745156	217,00
DC170-03-11.700A1-WJ30EJ	WJ30EJ	1	●	D30	6745157	217,00
DC170-03-11.800A1-WJ30EJ	WJ30EJ	1	●	D30	6745158	217,00
DC170-03-12.000A1-WJ30EJ	WJ30EJ	1	●	D30	6745160	217,00
DC170-03-12.100A1-WJ30EJ	WJ30EJ	1	●	D30	6745161	297,00
DC170-03-12.200A1-WJ30EJ	WJ30EJ	1	●	D30	6745162	297,00
DC170-03-12.300A1-WJ30EJ	WJ30EJ	1	●	D30	6745163	297,00
DC170-03-12.500A1-WJ30EJ	WJ30EJ	1	●	D30	6745165	297,00
DC170-03-12.600A1-WJ30EJ	WJ30EJ	1	●	D30	6745166	297,00
DC170-03-12.700A1-WJ30EJ	WJ30EJ	1	●	D30	6745167	297,00
DC170-03-13.000A1-WJ30EJ	WJ30EJ	1	●	D30	6745168	297,00
DC170-03-13.300A1-WJ30EJ	WJ30EJ	1	●	D30	6745169	297,00
DC170-03-13.494A1-WJ30EJ	WJ30EJ	1	●	D30	6745170	297,00
DC170-03-13.500A1-WJ30EJ	WJ30EJ	1	●	D30	6745171	297,00
DC170-03-14.000A1-WJ30EJ	WJ30EJ	1	●	D30	6745172	297,00
DC170-03-14.288A1-WJ30EJ	WJ30EJ	1	●	D30	6745173	389,00
DC170-03-14.500A1-WJ30EJ	WJ30EJ	1	●	D30	6745174	389,00
DC170-03-15.000A1-WJ30EJ	WJ30EJ	1	●	D30	6745175	389,00
DC170-03-15.875A1-WJ30EJ	WJ30EJ	1	●	D30	6745177	389,00
DC170-03-16.000A1-WJ30EJ	WJ30EJ	1	●	D30	6745178	389,00
DC170-03-16.500A1-WJ30EJ	WJ30EJ	1	●	D30	6745179	491,00
DC170-03-17.000A1-WJ30EJ	WJ30EJ	1	●	D30	6745180	491,00
DC170-03-17.500A1-WJ30EJ	WJ30EJ	1	●	D30	6745181	491,00
DC170-03-18.000A1-WJ30EJ	WJ30EJ	1	●	D30	6745182	491,00
DC170-03-19.050A1-WJ30EJ	WJ30EJ	1	●	D30	6745183	594,00
DC170-03-20.000A1-WJ30EJ	WJ30EJ	1	●	D30	6745184	594,00
DC170-05-03.000A1-WJ30EJ	WJ30EJ	1	●	D30	6745185	143,00
DC170-05-03.100A1-WJ30EJ	WJ30EJ	1	●	D30	6745186	143,00
DC170-05-03.175A1-WJ30EJ	WJ30EJ	1	●	D30	6745187	143,00
DC170-05-03.200A1-WJ30EJ	WJ30EJ	1	●	D30	6745188	143,00
DC170-05-03.300A1-WJ30EJ	WJ30EJ	1	●	D30	6745189	143,00
DC170-05-03.400A1-WJ30EJ	WJ30EJ	1	●	D30	6745190	143,00
DC170-05-03.500A1-WJ30EJ	WJ30EJ	1	●	D30	6745191	143,00
DC170-05-03.600A1-WJ30EJ	WJ30EJ	1	●	D30	6745193	143,00
DC170-05-03.700A1-WJ30EJ	WJ30EJ	1	●	D30	6745194	143,00
DC170-05-03.800A1-WJ30EJ	WJ30EJ	1	●	D30	6745195	143,00
DC170-05-03.900A1-WJ30EJ	WJ30EJ	1	●	D30	6745196	143,00
DC170-05-03.969A1-WJ30EJ	WJ30EJ	1	●	D30	6745197	143,00
DC170-05-04.000A1-WJ30EJ	WJ30EJ	1	●	D30	6745198	143,00
DC170-05-04.100A1-WJ30EJ	WJ30EJ	1	●	D30	6745199	143,00
DC170-05-04.200A1-WJ30EJ	WJ30EJ	1	●	D30	6745200	143,00
DC170-05-04.300A1-WJ30EJ	WJ30EJ	1	●	D30	6745201	143,00

Bezeichnung / Designation	Sorte / Grade	VE / US		Disc. Gr.	Article No.	EURO Stück / piece
DC170-05-04.366A1-WJ30EJ	WJ30EJ	1	●	D30	6745202	143,00
DC170-05-04.400A1-WJ30EJ	WJ30EJ	1	●	D30	6745203	143,00
DC170-05-04.500A1-WJ30EJ	WJ30EJ	1	●	D30	6745204	143,00
DC170-05-04.600A1-WJ30EJ	WJ30EJ	1	●	D30	6745205	143,00
DC170-05-04.650A1-WJ30EJ	WJ30EJ	1	●	D30	6745206	143,00
DC170-05-04.700A1-WJ30EJ	WJ30EJ	1	●	D30	6745207	143,00
DC170-05-04.763A1-WJ30EJ	WJ30EJ	1	●	D30	6745208	143,00
DC170-05-04.800A1-WJ30EJ	WJ30EJ	1	●	D30	6745209	143,00
DC170-05-04.900A1-WJ30EJ	WJ30EJ	1	●	D30	6745210	143,00
DC170-05-05.000A1-WJ30EJ	WJ30EJ	1	●	D30	6745211	143,00
DC170-05-05.100A1-WJ30EJ	WJ30EJ	1	●	D30	6745212	143,00
DC170-05-05.159A1-WJ30EJ	WJ30EJ	1	●	D30	6745213	143,00
DC170-05-05.200A1-WJ30EJ	WJ30EJ	1	●	D30	6745214	143,00
DC170-05-05.300A1-WJ30EJ	WJ30EJ	1	●	D30	6745215	143,00
DC170-05-05.500A1-WJ30EJ	WJ30EJ	1	●	D30	6745217	143,00
DC170-05-05.550A1-WJ30EJ	WJ30EJ	1	●	D30	6745218	143,00
DC170-05-05.556A1-WJ30EJ	WJ30EJ	1	●	D30	6745219	143,00
DC170-05-05.600A1-WJ30EJ	WJ30EJ	1	●	D30	6745220	143,00
DC170-05-05.700A1-WJ30EJ	WJ30EJ	1	●	D30	6745221	143,00
DC170-05-05.800A1-WJ30EJ	WJ30EJ	1	●	D30	6745222	143,00
DC170-05-05.900A1-WJ30EJ	WJ30EJ	1	●	D30	6745223	143,00
DC170-05-05.953A1-WJ30EJ	WJ30EJ	1	●	D30	6745224	143,00
DC170-05-06.000A1-WJ30EJ	WJ30EJ	1	●	D30	6745225	143,00
DC170-05-06.100A1-WJ30EJ	WJ30EJ	1	●	D30	6745226	171,00
DC170-05-06.200A1-WJ30EJ	WJ30EJ	1	●	D30	6745227	171,00
DC170-05-06.300A1-WJ30EJ	WJ30EJ	1	●	D30	6745228	171,00
DC170-05-06.350A1-WJ30EJ	WJ30EJ	1	●	D30	6745229	171,00
DC170-05-06.400A1-WJ30EJ	WJ30EJ	1	●	D30	6745230	171,00
DC170-05-06.500A1-WJ30EJ	WJ30EJ	1	●	D30	6745231	171,00
DC170-05-06.600A1-WJ30EJ	WJ30EJ	1	●	D30	6745232	171,00
DC170-05-06.700A1-WJ30EJ	WJ30EJ	1	●	D30	6745233	171,00
DC170-05-06.747A1-WJ30EJ	WJ30EJ	1	●	D30	6745234	171,00
DC170-05-06.800A1-WJ30EJ	WJ30EJ	1	●	D30	6745235	171,00
DC170-05-06.900A1-WJ30EJ	WJ30EJ	1	●	D30	6745236	171,00
DC170-05-07.000A1-WJ30EJ	WJ30EJ	1	●	D30	6745237	171,00
DC170-05-07.100A1-WJ30EJ	WJ30EJ	1	●	D30	6745238	171,00
DC170-05-07.144A1-WJ30EJ	WJ30EJ	1	●	D30	6745239	171,00
DC170-05-07.200A1-WJ30EJ	WJ30EJ	1	●	D30	6745240	171,00
DC170-05-07.300A1-WJ30EJ	WJ30EJ	1	●	D30	6745241	171,00
DC170-05-07.400A1-WJ30EJ	WJ30EJ	1	●	D30	6745242	171,00
DC170-05-07.500A1-WJ30EJ	WJ30EJ	1	●	D30	6745243	171,00
DC170-05-07.800A1-WJ30EJ	WJ30EJ	1	●	D30	6745245	171,00
DC170-05-07.900A1-WJ30EJ	WJ30EJ	1	●	D30	6745246	171,00
DC170-05-07.938A1-WJ30EJ	WJ30EJ	1	●	D30	6745247	171,00
DC170-05-08.000A1-WJ30EJ	WJ30EJ	1	●	D30	6745248	171,00
DC170-05-08.100A1-WJ30EJ	WJ30EJ	1	●	D30	6745249	200,00
DC170-05-08.200A1-WJ30EJ	WJ30EJ	1	●	D30	6745250	200,00
DC170-05-08.300A1-WJ30EJ	WJ30EJ	1	●	D30	6745251	200,00
DC170-05-08.334A1-WJ30EJ	WJ30EJ	1	●	D30	6745252	200,00
DC170-05-08.400A1-WJ30EJ	WJ30EJ	1	●	D30	6745253	200,00
DC170-05-08.500A1-WJ30EJ	WJ30EJ	1	●	D30	6745254	200,00
DC170-05-08.600A1-WJ30EJ	WJ30EJ	1	●	D30	6745255	200,00
DC170-05-08.700A1-WJ30EJ	WJ30EJ	1	●	D30	6745256	200,00
DC170-05-08.731A1-WJ30EJ	WJ30EJ	1	●	D30	6745257	200,00
DC170-05-08.800A1-WJ30EJ	WJ30EJ	1	●	D30	6745258	200,00
DC170-05-09.000A1-WJ30EJ	WJ30EJ	1	●	D30	6745259	200,00
DC170-05-09.128A1-WJ30EJ	WJ30EJ	1	●	D30	6745260	200,00
DC170-05-09.200A1-WJ30EJ	WJ30EJ	1	●	D30	6745261	200,00
DC170-05-09.300A1-WJ30EJ	WJ30EJ	1	●	D30	6745262	200,00
DC170-05-09.500A1-WJ30EJ	WJ30EJ	1	●	D30	6745263	200,00
DC170-05-09.525A1-WJ30EJ	WJ30EJ	1	●	D30	6745264	200,00
DC170-05-09.600A1-WJ30EJ	WJ30EJ	1	●	D30	6745265	200,00
DC170-05-09.700A1-WJ30EJ	WJ30EJ	1	●	D30	6745266	200,00
DC170-05-09.800A1-WJ30EJ	WJ30EJ	1	●	D30	6745267	200,00
DC170-05-09.900A1-WJ30EJ	WJ30EJ	1	●	D30	6745268	200,00
DC170-05-10.000A1-WJ30EJ	WJ30EJ	1	●	D30	6745270	200,00
DC170-05-10.100A1-WJ30EJ	WJ30EJ	1	●	D30	6745271	271,00
DC170-05-10.200A1-WJ30EJ	WJ30EJ	1	●	D30	6745272	271,00
DC170-05-10.300A1-WJ30EJ	WJ30EJ	1	●	D30	6745273	271,00
DC170-05-10.319A1-WJ30EJ	WJ30EJ	1	●	D30	6745274	271,00

Bezeichnung / Designation	Sorte / Grade	VE / US		Disc. Gr.	Article No.	EURO Stück / piece
DC170-05-10.400A1-WJ30EJ	WJ30EJ	1	●	D30	6745275	271,00
DC170-05-10.500A1-WJ30EJ	WJ30EJ	1	●	D30	6745276	271,00
DC170-05-10.716A1-WJ30EJ	WJ30EJ	1	●	D30	6745277	271,00
DC170-05-10.800A1-WJ30EJ	WJ30EJ	1	●	D30	6745278	271,00
DC170-05-11.000A1-WJ30EJ	WJ30EJ	1	●	D30	6745279	271,00
DC170-05-11.100A1-WJ30EJ	WJ30EJ	1	●	D30	6745280	271,00
DC170-05-11.113A1-WJ30EJ	WJ30EJ	1	●	D30	6745281	271,00
DC170-05-11.200A1-WJ30EJ	WJ30EJ	1	●	D30	6745282	271,00
DC170-05-11.500A1-WJ30EJ	WJ30EJ	1	●	D30	6745283	271,00
DC170-05-11.509A1-WJ30EJ	WJ30EJ	1	●	D30	6745284	271,00
DC170-05-11.800A1-WJ30EJ	WJ30EJ	1	●	D30	6745286	271,00
DC170-05-11.906A1-WJ30EJ	WJ30EJ	1	●	D30	6745287	271,00
DC170-05-12.000A1-WJ30EJ	WJ30EJ	1	●	D30	6745288	271,00
DC170-05-12.100A1-WJ30EJ	WJ30EJ	1	●	D30	6745289	371,00
DC170-05-12.200A1-WJ30EJ	WJ30EJ	1	●	D30	6745290	371,00
DC170-05-12.300A1-WJ30EJ	WJ30EJ	1	●	D30	6745291	371,00
DC170-05-12.303A1-WJ30EJ	WJ30EJ	1	●	D30	6745292	371,00
DC170-05-12.500A1-WJ30EJ	WJ30EJ	1	●	D30	6745293	371,00
DC170-05-12.700A1-WJ30EJ	WJ30EJ	1	●	D30	6745295	371,00
DC170-05-13.000A1-WJ30EJ	WJ30EJ	1	●	D30	6745296	371,00
DC170-05-13.300A1-WJ30EJ	WJ30EJ	1	●	D30	6745297	371,00
DC170-05-13.494A1-WJ30EJ	WJ30EJ	1	●	D30	6745298	371,00
DC170-05-13.500A1-WJ30EJ	WJ30EJ	1	●	D30	6745299	371,00
DC170-05-14.000A1-WJ30EJ	WJ30EJ	1	●	D30	6745300	371,00
DC170-05-14.288A1-WJ30EJ	WJ30EJ	1	●	D30	6745301	486,00
DC170-05-14.500A1-WJ30EJ	WJ30EJ	1	●	D30	6745302	486,00
DC170-05-15.000A1-WJ30EJ	WJ30EJ	1	●	D30	6745303	486,00
DC170-05-15.500A1-WJ30EJ	WJ30EJ	1	●	D30	6745304	486,00
DC170-05-15.875A1-WJ30EJ	WJ30EJ	1	●	D30	6745305	486,00
DC170-05-16.000A1-WJ30EJ	WJ30EJ	1	●	D30	6745306	486,00
DC170-05-16.500A1-WJ30EJ	WJ30EJ	1	●	D30	6745307	614,00
DC170-05-17.000A1-WJ30EJ	WJ30EJ	1	●	D30	6745308	614,00
DC170-05-17.500A1-WJ30EJ	WJ30EJ	1	●	D30	6745309	614,00
DC170-05-18.000A1-WJ30EJ	WJ30EJ	1	●	D30	6745310	614,00
DC170-05-18.500A1-WJ30EJ	WJ30EJ	1	●	D30	6745311	743,00
DC170-05-19.000A1-WJ30EJ	WJ30EJ	1	●	D30	6745312	743,00
DC170-05-19.050A1-WJ30EJ	WJ30EJ	1	●	D30	6745313	743,00
DC170-05-20.000A1-WJ30EJ	WJ30EJ	1	●	D30	6745314	743,00
DC170-08-03.000A1-WJ30EJ	WJ30EJ	1	●	D31	6745315	229,00
DC170-08-03.100A1-WJ30EJ	WJ30EJ	1	●	D31	6745316	229,00
DC170-08-03.175A1-WJ30EJ	WJ30EJ	1	●	D31	6745317	229,00
DC170-08-03.200A1-WJ30EJ	WJ30EJ	1	●	D31	6745318	229,00
DC170-08-03.300A1-WJ30EJ	WJ30EJ	1	●	D31	6745319	229,00
DC170-08-03.400A1-WJ30EJ	WJ30EJ	1	●	D31	6745320	229,00
DC170-08-03.500A1-WJ30EJ	WJ30EJ	1	●	D31	6745321	229,00
DC170-08-03.572A1-WJ30EJ	WJ30EJ	1	●	D31	6745322	229,00
DC170-08-03.600A1-WJ30EJ	WJ30EJ	1	●	D31	6745323	229,00
DC170-08-03.700A1-WJ30EJ	WJ30EJ	1	●	D31	6745324	229,00
DC170-08-03.800A1-WJ30EJ	WJ30EJ	1	●	D31	6745325	229,00
DC170-08-03.900A1-WJ30EJ	WJ30EJ	1	●	D31	6745326	229,00
DC170-08-03.969A1-WJ30EJ	WJ30EJ	1	●	D31	6745327	229,00
DC170-08-04.000A1-WJ30EJ	WJ30EJ	1	●	D31	6745328	229,00
DC170-08-04.100A1-WJ30EJ	WJ30EJ	1	●	D31	6745329	229,00
DC170-08-04.200A1-WJ30EJ	WJ30EJ	1	●	D31	6745330	229,00
DC170-08-04.300A1-WJ30EJ	WJ30EJ	1	●	D31	6745331	229,00
DC170-08-04.366A1-WJ30EJ	WJ30EJ	1	●	D31	6745332	229,00
DC170-08-04.400A1-WJ30EJ	WJ30EJ	1	●	D31	6745333	229,00
DC170-08-04.500A1-WJ30EJ	WJ30EJ	1	●	D31	6745334	229,00
DC170-08-04.600A1-WJ30EJ	WJ30EJ	1	●	D31	6745335	229,00
DC170-08-04.763A1-WJ30EJ	WJ30EJ	1	●	D31	6745337	229,00
DC170-08-04.800A1-WJ30EJ	WJ30EJ	1	●	D31	6745338	229,00
DC170-08-04.900A1-WJ30EJ	WJ30EJ	1	●	D31	6745339	229,00
DC170-08-05.000A1-WJ30EJ	WJ30EJ	1	●	D31	6745340	229,00
DC170-08-05.100A1-WJ30EJ	WJ30EJ	1	●	D31	6745341	229,00
DC170-08-05.159A1-WJ30EJ	WJ30EJ	1	●	D31	6745342	229,00
DC170-08-05.200A1-WJ30EJ	WJ30EJ	1	●	D31	6745343	229,00
DC170-08-05.300A1-WJ30EJ	WJ30EJ	1	●	D31	6745344	229,00
DC170-08-05.400A1-WJ30EJ	WJ30EJ	1	●	D31	6745345	229,00
DC170-08-05.500A1-WJ30EJ	WJ30EJ	1	●	D31	6745346	229,00
DC170-08-05.556A1-WJ30EJ	WJ30EJ	1	●	D31	6745347	229,00

Bezeichnung / Designation	Sorte / Grade	VE / US		Disc. Gr.	Article No.	EURO Stück / piece
DC170-08-05.600A1-WJ30EJ	WJ30EJ	1	●	D31	6745348	229,00
DC170-08-05.700A1-WJ30EJ	WJ30EJ	1	●	D31	6745349	229,00
DC170-08-05.800A1-WJ30EJ	WJ30EJ	1	●	D31	6745350	229,00
DC170-08-05.900A1-WJ30EJ	WJ30EJ	1	●	D31	6745351	229,00
DC170-08-05.953A1-WJ30EJ	WJ30EJ	1	●	D31	6745352	229,00
DC170-08-06.000A1-WJ30EJ	WJ30EJ	1	●	D31	6745353	229,00
DC170-08-06.100A1-WJ30EJ	WJ30EJ	1	●	D31	6745354	274,00
DC170-08-06.200A1-WJ30EJ	WJ30EJ	1	●	D31	6745355	274,00
DC170-08-06.300A1-WJ30EJ	WJ30EJ	1	●	D31	6745356	274,00
DC170-08-06.350A1-WJ30EJ	WJ30EJ	1	●	D31	6745357	274,00
DC170-08-06.400A1-WJ30EJ	WJ30EJ	1	●	D31	6745358	274,00
DC170-08-06.500A1-WJ30EJ	WJ30EJ	1	●	D31	6745359	274,00
DC170-08-06.600A1-WJ30EJ	WJ30EJ	1	●	D31	6745360	274,00
DC170-08-06.700A1-WJ30EJ	WJ30EJ	1	●	D31	6745361	274,00
DC170-08-06.747A1-WJ30EJ	WJ30EJ	1	●	D31	6745362	274,00
DC170-08-06.800A1-WJ30EJ	WJ30EJ	1	●	D31	6745363	274,00
DC170-08-06.900A1-WJ30EJ	WJ30EJ	1	●	D31	6745364	274,00
DC170-08-07.000A1-WJ30EJ	WJ30EJ	1	●	D31	6745365	274,00
DC170-08-07.144A1-WJ30EJ	WJ30EJ	1	●	D31	6745367	274,00
DC170-08-07.400A1-WJ30EJ	WJ30EJ	1	●	D31	6745370	274,00
DC170-08-07.500A1-WJ30EJ	WJ30EJ	1	●	D31	6745371	274,00
DC170-08-07.541A1-WJ30EJ	WJ30EJ	1	○	D31	6745372*	274,00
DC170-08-07.600A1-WJ30EJ	WJ30EJ	1	●	D31	6745373	274,00
DC170-08-07.700A1-WJ30EJ	WJ30EJ	1	●	D31	6745374	274,00
DC170-08-07.800A1-WJ30EJ	WJ30EJ	1	●	D31	6745375	274,00
DC170-08-07.900A1-WJ30EJ	WJ30EJ	1	●	D31	6745376	274,00
DC170-08-07.938A1-WJ30EJ	WJ30EJ	1	●	D31	6745377	274,00
DC170-08-08.000A1-WJ30EJ	WJ30EJ	1	●	D31	6745378	274,00
DC170-08-08.100A1-WJ30EJ	WJ30EJ	1	●	D31	6745379	320,00
DC170-08-08.200A1-WJ30EJ	WJ30EJ	1	●	D31	6745380	320,00
DC170-08-08.300A1-WJ30EJ	WJ30EJ	1	●	D31	6745381	320,00
DC170-08-08.334A1-WJ30EJ	WJ30EJ	1	●	D31	6745382	320,00
DC170-08-08.400A1-WJ30EJ	WJ30EJ	1	●	D31	6745383	320,00
DC170-08-08.500A1-WJ30EJ	WJ30EJ	1	●	D31	6745384	320,00
DC170-08-08.600A1-WJ30EJ	WJ30EJ	1	●	D31	6745385	320,00
DC170-08-08.700A1-WJ30EJ	WJ30EJ	1	●	D31	6745386	320,00
DC170-08-08.731A1-WJ30EJ	WJ30EJ	1	●	D31	6745387	320,00
DC170-08-08.800A1-WJ30EJ	WJ30EJ	1	●	D31	6745388	320,00
DC170-08-09.000A1-WJ30EJ	WJ30EJ	1	●	D31	6745390	320,00
DC170-08-09.100A1-WJ30EJ	WJ30EJ	1	●	D31	6745391	320,00
DC170-08-09.128A1-WJ30EJ	WJ30EJ	1	●	D31	6745392	320,00
DC170-08-09.200A1-WJ30EJ	WJ30EJ	1	●	D31	6745393	320,00
DC170-08-09.300A1-WJ30EJ	WJ30EJ	1	●	D31	6745394	320,00
DC170-08-09.400A1-WJ30EJ	WJ30EJ	1	●	D31	6745395	320,00
DC170-08-09.500A1-WJ30EJ	WJ30EJ	1	●	D31	6745396	320,00
DC170-08-09.525A1-WJ30EJ	WJ30EJ	1	●	D31	6745397	320,00
DC170-08-09.600A1-WJ30EJ	WJ30EJ	1	●	D31	6745398	320,00
DC170-08-09.700A1-WJ30EJ	WJ30EJ	1	●	D31	6745399	320,00
DC170-08-09.800A1-WJ30EJ	WJ30EJ	1	●	D31	6745400	320,00
DC170-08-09.900A1-WJ30EJ	WJ30EJ	1	●	D31	6745401	320,00
DC170-08-09.922A1-WJ30EJ	WJ30EJ	1	●	D31	6745402	320,00
DC170-08-10.000A1-WJ30EJ	WJ30EJ	1	●	D31	6745403	320,00
DC170-08-10.100A1-WJ30EJ	WJ30EJ	1	●	D31	6745404	434,00
DC170-08-10.200A1-WJ30EJ	WJ30EJ	1	●	D31	6745405	434,00
DC170-08-10.300A1-WJ30EJ	WJ30EJ	1	●	D31	6745406	434,00
DC170-08-10.319A1-WJ30EJ	WJ30EJ	1	●	D31	6745407	434,00
DC170-08-10.500A1-WJ30EJ	WJ30EJ	1	●	D31	6745409	434,00
DC170-08-10.716A1-WJ30EJ	WJ30EJ	1	●	D31	6745412	434,00
DC170-08-10.800A1-WJ30EJ	WJ30EJ	1	●	D31	6745413	434,00
DC170-08-11.000A1-WJ30EJ	WJ30EJ	1	●	D31	6745415	434,00
DC170-08-11.100A1-WJ30EJ	WJ30EJ	1	●	D31	6745416	434,00
DC170-08-11.113A1-WJ30EJ	WJ30EJ	1	●	D31	6745417	434,00
DC170-08-11.200A1-WJ30EJ	WJ30EJ	1	●	D31	6745418	434,00
DC170-08-11.300A1-WJ30EJ	WJ30EJ	1	●	D31	6745419	434,00
DC170-08-11.400A1-WJ30EJ	WJ30EJ	1	●	D31	6745420	434,00
DC170-08-11.500A1-WJ30EJ	WJ30EJ	1	●	D31	6745421	434,00
DC170-08-11.700A1-WJ30EJ	WJ30EJ	1	●	D31	6745424	434,00
DC170-08-11.800A1-WJ30EJ	WJ30EJ	1	●	D31	6745425	434,00
DC170-08-11.900A1-WJ30EJ	WJ30EJ	1	●	D31	6745426	434,00
DC170-08-12.000A1-WJ30EJ	WJ30EJ	1	●	D31	6745428	434,00

Bezeichnung / Designation	Sorte / Grade	VE / US		Disc. Gr.	Article No.	EURO Stück / piece
DC170-08-12.303A1-WJ30EJ	WJ30EJ	1	●	D31	6745429	**594,00**
DC170-08-12.500A1-WJ30EJ	WJ30EJ	1	●	D31	6745430	**594,00**
DC170-08-12.700A1-WJ30EJ	WJ30EJ	1	●	D31	6745431	**594,00**
DC170-08-13.000A1-WJ30EJ	WJ30EJ	1	●	D31	6745432	**594,00**
DC170-08-13.494A1-WJ30EJ	WJ30EJ	1	●	D31	6745433	**594,00**
DC170-08-13.500A1-WJ30EJ	WJ30EJ	1	●	D31	6745434	**594,00**
DC170-08-14.000A1-WJ30EJ	WJ30EJ	1	●	D31	6745435	**594,00**
DC170-08-14.288A1-WJ30EJ	WJ30EJ	1	●	D31	6745436	**777,00**
DC170-08-14.500A1-WJ30EJ	WJ30EJ	1	●	D31	6745437	**777,00**
DC170-08-15.000A1-WJ30EJ	WJ30EJ	1	●	D31	6745438	**777,00**
DC170-08-15.500A1-WJ30EJ	WJ30EJ	1	●	D31	6745439	**777,00**
DC170-08-15.875A1-WJ30EJ	WJ30EJ	1	●	D31	6745440	**777,00**
DC170-08-16.000A1-WJ30EJ	WJ30EJ	1	●	D31	6745441	**777,00**
DC170-08-16.500A1-WJ30EJ	WJ30EJ	1	●	D31	6745442	**983,00**
DC170-08-17.000A1-WJ30EJ	WJ30EJ	1	●	D31	6745443	**983,00**
DC170-08-17.500A1-WJ30EJ	WJ30EJ	1	●	D31	6745444	**983,00**
DC170-08-18.000A1-WJ30EJ	WJ30EJ	1	●	D31	6745445	**983,00**
DC170-08-20.000A1-WJ30EJ	WJ30EJ	1	●	D31	6745450	**1.189,00**
DC170-12-03.000A1-WJ30EJ	WJ30EJ	1	●	D31	6745451	**264,00**
DC170-12-03.100A1-WJ30EJ	WJ30EJ	1	●	D31	6745452	**264,00**
DC170-12-03.175A1-WJ30EJ	WJ30EJ	1	●	D31	6745453	**264,00**
DC170-12-03.200A1-WJ30EJ	WJ30EJ	1	●	D31	6745454	**264,00**
DC170-12-03.300A1-WJ30EJ	WJ30EJ	1	●	D31	6745455	**264,00**
DC170-12-03.400A1-WJ30EJ	WJ30EJ	1	●	D31	6745456	**264,00**
DC170-12-03.500A1-WJ30EJ	WJ30EJ	1	●	D31	6745457	**264,00**
DC170-12-03.572A1-WJ30EJ	WJ30EJ	1	●	D31	6745458	**264,00**
DC170-12-03.600A1-WJ30EJ	WJ30EJ	1	●	D31	6745459	**264,00**
DC170-12-03.700A1-WJ30EJ	WJ30EJ	1	●	D31	6745460	**264,00**
DC170-12-03.800A1-WJ30EJ	WJ30EJ	1	●	D31	6745461	**264,00**
DC170-12-03.900A1-WJ30EJ	WJ30EJ	1	●	D31	6745462	**264,00**
DC170-12-03.969A1-WJ30EJ	WJ30EJ	1	●	D31	6745463	**264,00**
DC170-12-04.000A1-WJ30EJ	WJ30EJ	1	●	D31	6745464	**264,00**
DC170-12-04.100A1-WJ30EJ	WJ30EJ	1	●	D31	6745465	**264,00**
DC170-12-04.200A1-WJ30EJ	WJ30EJ	1	●	D31	6745466	**264,00**
DC170-12-04.300A1-WJ30EJ	WJ30EJ	1	●	D31	6745467	**264,00**
DC170-12-04.366A1-WJ30EJ	WJ30EJ	1	●	D31	6745468	**264,00**
DC170-12-04.400A1-WJ30EJ	WJ30EJ	1	●	D31	6745469	**264,00**
DC170-12-04.500A1-WJ30EJ	WJ30EJ	1	●	D31	6745470	**264,00**
DC170-12-04.600A1-WJ30EJ	WJ30EJ	1	●	D31	6745471	**264,00**
DC170-12-04.700A1-WJ30EJ	WJ30EJ	1	●	D31	6745472	**264,00**
DC170-12-04.763A1-WJ30EJ	WJ30EJ	1	●	D31	6745473	**264,00**
DC170-12-04.800A1-WJ30EJ	WJ30EJ	1	●	D31	6745474	**264,00**
DC170-12-04.900A1-WJ30EJ	WJ30EJ	1	●	D31	6745475	**264,00**
DC170-12-05.000A1-WJ30EJ	WJ30EJ	1	●	D31	6745476	**264,00**
DC170-12-05.100A1-WJ30EJ	WJ30EJ	1	●	D31	6745477	**264,00**
DC170-12-05.159A1-WJ30EJ	WJ30EJ	1	●	D31	6745478	**264,00**
DC170-12-05.200A1-WJ30EJ	WJ30EJ	1	●	D31	6745479	**264,00**
DC170-12-05.300A1-WJ30EJ	WJ30EJ	1	●	D31	6745480	**264,00**
DC170-12-05.400A1-WJ30EJ	WJ30EJ	1	●	D31	6745481	**264,00**
DC170-12-05.500A1-WJ30EJ	WJ30EJ	1	●	D31	6745482	**264,00**
DC170-12-05.550A1-WJ30EJ	WJ30EJ	1	●	D31	6745483	**264,00**
DC170-12-05.556A1-WJ30EJ	WJ30EJ	1	●	D31	6745484	**264,00**
DC170-12-05.600A1-WJ30EJ	WJ30EJ	1	●	D31	6745485	**264,00**
DC170-12-05.700A1-WJ30EJ	WJ30EJ	1	●	D31	6745486	**264,00**
DC170-12-05.800A1-WJ30EJ	WJ30EJ	1	●	D31	6745487	**264,00**
DC170-12-05.900A1-WJ30EJ	WJ30EJ	1	●	D31	6745488	**264,00**
DC170-12-06.000A1-WJ30EJ	WJ30EJ	1	●	D31	6745489	**264,00**
DC170-12-06.100A1-WJ30EJ	WJ30EJ	1	●	D31	6745490	**317,00**
DC170-12-06.200A1-WJ30EJ	WJ30EJ	1	●	D31	6745491	**317,00**
DC170-12-06.300A1-WJ30EJ	WJ30EJ	1	●	D31	6745492	**317,00**
DC170-12-06.350A1-WJ30EJ	WJ30EJ	1	●	D31	6745493	**317,00**
DC170-12-06.400A1-WJ30EJ	WJ30EJ	1	●	D31	6745494	**317,00**
DC170-12-06.500A1-WJ30EJ	WJ30EJ	1	●	D31	6745495	**317,00**
DC170-12-06.600A1-WJ30EJ	WJ30EJ	1	●	D31	6745496	**317,00**
DC170-12-06.747A1-WJ30EJ	WJ30EJ	1	●	D31	6745498	**317,00**
DC170-12-06.800A1-WJ30EJ	WJ30EJ	1	●	D31	6745499	**317,00**
DC170-12-06.900A1-WJ30EJ	WJ30EJ	1	●	D31	6745500	**317,00**
DC170-12-07.000A1-WJ30EJ	WJ30EJ	1	●	D31	6745501	**317,00**
DC170-12-07.100A1-WJ30EJ	WJ30EJ	1	●	D31	6745502	**317,00**
DC170-12-07.144A1-WJ30EJ	WJ30EJ	1	●	D31	6745503	**317,00**

Bezeichnung / Designation	Sorte / Grade	VE / US		Disc. Gr.	Article No.	EURO Stück / piece
DC170-12-07.300A1-WJ30EJ	WJ30EJ	1	●	D31	6745505	**317,00**
DC170-12-07.400A1-WJ30EJ	WJ30EJ	1	●	D31	6745506	**317,00**
DC170-12-07.500A1-WJ30EJ	WJ30EJ	1	●	D31	6745507	**317,00**
DC170-12-07.541A1-WJ30EJ	WJ30EJ	1	●	D31	6745508	**317,00**
DC170-12-07.800A1-WJ30EJ	WJ30EJ	1	●	D31	6745509	**317,00**
DC170-12-07.900A1-WJ30EJ	WJ30EJ	1	○	D31	6745510*	**317,00**
DC170-12-07.938A1-WJ30EJ	WJ30EJ	1	●	D31	6745511	**317,00**
DC170-12-08.000A1-WJ30EJ	WJ30EJ	1	●	D31	6745512	**317,00**
DC170-12-08.100A1-WJ30EJ	WJ30EJ	1	●	D31	6745513	**370,00**
DC170-12-08.200A1-WJ30EJ	WJ30EJ	1	●	D31	6745514	**370,00**
DC170-12-08.300A1-WJ30EJ	WJ30EJ	1	●	D31	6745515	**370,00**
DC170-12-08.400A1-WJ30EJ	WJ30EJ	1	●	D31	6745516	**370,00**
DC170-12-08.500A1-WJ30EJ	WJ30EJ	1	●	D31	6745517	**370,00**
DC170-12-08.600A1-WJ30EJ	WJ30EJ	1	●	D31	6745518	**370,00**
DC170-12-08.700A1-WJ30EJ	WJ30EJ	1	●	D31	6745519	**370,00**
DC170-12-08.731A1-WJ30EJ	WJ30EJ	1	●	D31	6745520	**370,00**
DC170-12-08.800A1-WJ30EJ	WJ30EJ	1	●	D31	6745521	**370,00**
DC170-12-09.000A1-WJ30EJ	WJ30EJ	1	●	D31	6745522	**370,00**
DC170-12-09.128A1-WJ30EJ	WJ30EJ	1	●	D31	6745523	**370,00**
DC170-12-09.300A1-WJ30EJ	WJ30EJ	1	●	D31	6745525	**370,00**
DC170-12-09.500A1-WJ30EJ	WJ30EJ	1	●	D31	6745526	**370,00**
DC170-12-09.525A1-WJ30EJ	WJ30EJ	1	●	D31	6745527	**370,00**
DC170-12-09.600A1-WJ30EJ	WJ30EJ	1	●	D31	6745528	**370,00**
DC170-12-09.700A1-WJ30EJ	WJ30EJ	1	●	D31	6745529	**370,00**
DC170-12-09.800A1-WJ30EJ	WJ30EJ	1	●	D31	6745530	**370,00**
DC170-12-09.922A1-WJ30EJ	WJ30EJ	1	●	D31	6745531	**370,00**
DC170-12-10.000A1-WJ30EJ	WJ30EJ	1	●	D31	6745532	**370,00**
DC170-12-10.100A1-WJ30EJ	WJ30EJ	1	●	D31	6745533	**502,00**
DC170-12-10.200A1-WJ30EJ	WJ30EJ	1	●	D31	6745534	**502,00**
DC170-12-10.300A1-WJ30EJ	WJ30EJ	1	○	D31	6745535*	**502,00**
DC170-12-10.319A1-WJ30EJ	WJ30EJ	1	●	D31	6745536	**502,00**
DC170-12-10.400A1-WJ30EJ	WJ30EJ	1	●	D31	6745537	**502,00**
DC170-12-10.500A1-WJ30EJ	WJ30EJ	1	●	D31	6745538	**502,00**
DC170-12-11.000A1-WJ30EJ	WJ30EJ	1	●	D31	6745541	**502,00**
DC170-12-11.100A1-WJ30EJ	WJ30EJ	1	●	D31	6745542	**502,00**
DC170-12-11.113A1-WJ30EJ	WJ30EJ	1	●	D31	6745543	**502,00**
DC170-12-11.200A1-WJ30EJ	WJ30EJ	1	●	D31	6745544	**502,00**
DC170-12-11.500A1-WJ30EJ	WJ30EJ	1	●	D31	6745545	**502,00**
DC170-12-11.509A1-WJ30EJ	WJ30EJ	1	●	D31	6745546	**502,00**
DC170-12-11.700A1-WJ30EJ	WJ30EJ	1	●	D31	6745547	**502,00**
DC170-12-11.800A1-WJ30EJ	WJ30EJ	1	●	D31	6745548	**502,00**
DC170-12-11.906A1-WJ30EJ	WJ30EJ	1	●	D31	6745549	**502,00**
DC170-12-12.000A1-WJ30EJ	WJ30EJ	1	●	D31	6745550	**502,00**
DC170-12-12.200A1-WJ30EJ	WJ30EJ	1	●	D31	6745552	**687,00**
DC170-12-12.303A1-WJ30EJ	WJ30EJ	1	●	D31	6745554	**687,00**
DC170-12-12.500A1-WJ30EJ	WJ30EJ	1	●	D31	6745555	**687,00**
DC170-12-12.600A1-WJ30EJ	WJ30EJ	1	●	D31	6745556	**687,00**
DC170-12-12.700A1-WJ30EJ	WJ30EJ	1	●	D31	6745557	**687,00**
DC170-12-13.000A1-WJ30EJ	WJ30EJ	1	●	D31	6745558	**687,00**
DC170-12-13.494A1-WJ30EJ	WJ30EJ	1	●	D31	6745559	**687,00**
DC170-12-13.500A1-WJ30EJ	WJ30EJ	1	●	D31	6745560	**687,00**
DC170-12-14.000A1-WJ30EJ	WJ30EJ	1	●	D31	6745561	**687,00**
DC170-12-14.288A1-WJ30EJ	WJ30EJ	1	●	D31	6745562	**899,00**
DC170-12-14.500A1-WJ30EJ	WJ30EJ	1	●	D31	6745563	**899,00**
DC170-12-15.000A1-WJ30EJ	WJ30EJ	1	●	D31	6745564	**899,00**
DC170-12-15.500A1-WJ30EJ	WJ30EJ	1	●	D31	6745565	**899,00**
DC170-12-15.875A1-WJ30EJ	WJ30EJ	1	●	D31	6745566	**899,00**
DC170-12-16.000A1-WJ30EJ	WJ30EJ	1	●	D31	6745567	**899,00**
DC170-12-16.500A1-WJ30EJ	WJ30EJ	1	●	D31	6745568	**1.137,00**
DC170-12-17.000A1-WJ30EJ	WJ30EJ	1	●	D31	6745569	**1.137,00**
DC170-12-17.500A1-WJ30EJ	WJ30EJ	1	●	D31	6745570	**1.137,00**
DC170-12-18.000A1-WJ30EJ	WJ30EJ	1	●	D31	6745571	**1.137,00**
DC170-12-19.000A1-WJ30EJ	WJ30EJ	1	●	D31	6745573	**1.374,00**
DC170-12-19.500A1-WJ30EJ	WJ30EJ	1	●	D31	6745574	**1.374,00**
DC170-12-20.000A1-WJ30EJ	WJ30EJ	1	●	D31	6745575	**1.374,00**
DC170-16-03.000A1-WJ30EJ	WJ30EJ	1	●	D32	6597556	**280,00**
DC170-16-03.175A1-WJ30EJ	WJ30EJ	1	●	D32	6597557	**280,00**
DC170-16-03.500A1-WJ30EJ	WJ30EJ	1	●	D32	6597558	**280,00**
DC170-16-03.572A1-WJ30EJ	WJ30EJ	1	●	D32	6597559	**280,00**
DC170-16-03.969A1-WJ30EJ	WJ30EJ	1	●	D32	6597570	**280,00**

Bezeichnung / Designation	Sorte / Grade	VE / US		Disc. Gr.	Article No.	EURO Stück / piece
DC170-16-04.000A1-WJ30EJ	WJ30EJ	1	●	D32	6597571	280,00
DC170-16-04.500A1-WJ30EJ	WJ30EJ	1	●	D32	6597572	296,00
DC170-16-04.763A1-WJ30EJ	WJ30EJ	1	●	D32	6597573	296,00
DC170-16-04.800A1-WJ30EJ	WJ30EJ	1	●	D32	6597574	296,00
DC170-16-05.000A1-WJ30EJ	WJ30EJ	1	●	D32	6597575	296,00
DC170-16-05.500A1-WJ30EJ	WJ30EJ	1	●	D32	6597576	311,00
DC170-16-05.556A1-WJ30EJ	WJ30EJ	1	●	D32	6597577	311,00
DC170-16-05.800A1-WJ30EJ	WJ30EJ	1	●	D32	6597578	311,00
DC170-16-06.000A1-WJ30EJ	WJ30EJ	1	●	D32	6597579	311,00
DC170-16-06.100A1-WJ30EJ	WJ30EJ	1	●	D32	6597580	374,00
DC170-16-06.350A1-WJ30EJ	WJ30EJ	1	●	D32	6597581	374,00
DC170-16-06.500A1-WJ30EJ	WJ30EJ	1	●	D32	6597582	374,00
DC170-16-06.800A1-WJ30EJ	WJ30EJ	1	●	D32	6597583	374,00
DC170-16-07.000A1-WJ30EJ	WJ30EJ	1	●	D32	6597584	374,00
DC170-16-07.144A1-WJ30EJ	WJ30EJ	1	●	D32	6597585	374,00
DC170-16-07.400A1-WJ30EJ	WJ30EJ	1	●	D32	6597586	374,00
DC170-16-07.500A1-WJ30EJ	WJ30EJ	1	●	D32	6597587	374,00
DC170-16-07.938A1-WJ30EJ	WJ30EJ	1	●	D32	6597588	374,00
DC170-16-08.000A1-WJ30EJ	WJ30EJ	1	●	D32	6597589	374,00
DC170-16-08.500A1-WJ30EJ	WJ30EJ	1	●	D32	6597591	436,00
DC170-16-08.731A1-WJ30EJ	WJ30EJ	1	●	D32	6597592	436,00
DC170-16-09.000A1-WJ30EJ	WJ30EJ	1	●	D32	6597593	436,00
DC170-16-09.525A1-WJ30EJ	WJ30EJ	1	●	D32	6597594	436,00
DC170-16-09.800A1-WJ30EJ	WJ30EJ	1	●	D32	6597595	436,00
DC170-16-10.000A1-WJ30EJ	WJ30EJ	1	●	D32	6597596	436,00
DC170-16-10.200A1-WJ30EJ	WJ30EJ	1	●	D32	6597597	592,00
DC170-16-10.319A1-WJ30EJ	WJ30EJ	1	●	D32	6597598	592,00
DC170-16-11.000A1-WJ30EJ	WJ30EJ	1	●	D32	6597599	592,00
DC170-16-11.113A1-WJ30EJ	WJ30EJ	1	●	D32	6597600	592,00
DC170-16-11.500A1-WJ30EJ	WJ30EJ	1	●	D32	6597601	592,00
DC170-16-11.800A1-WJ30EJ	WJ30EJ	1	●	D32	6597602	592,00
DC170-16-11.906A1-WJ30EJ	WJ30EJ	1	●	D32	6597603	592,00
DC170-16-12.000A1-WJ30EJ	WJ30EJ	1	●	D32	6597604	592,00
DC170-16-12.700A1-WJ30EJ	WJ30EJ	1	●	D32	6597605	810,00
DC170-16-13.000A1-WJ30EJ	WJ30EJ	1	●	D32	6597606	810,00
DC170-16-14.000A1-WJ30EJ	WJ30EJ	1	●	D32	6597607	810,00
DC170-16-14.288A1-WJ30EJ	WJ30EJ	1	●	D32	6597608	1.059,00
DC170-16-15.000A1-WJ30EJ	WJ30EJ	1	●	D32	6597609	1.059,00
DC170-16-16.000A1-WJ30EJ	WJ30EJ	1	●	D32	6597610	1.059,00
DC170-20-03.000A1-WJ30EJ	WJ30EJ	1	●	D32	6597611	332,00
DC170-20-03.175A1-WJ30EJ	WJ30EJ	1	●	D32	6597612	332,00
DC170-20-03.500A1-WJ30EJ	WJ30EJ	1	●	D32	6597613	332,00
DC170-20-03.572A1-WJ30EJ	WJ30EJ	1	●	D32	6597614	332,00
DC170-20-03.969A1-WJ30EJ	WJ30EJ	1	●	D32	6597615	332,00
DC170-20-04.000A1-WJ30EJ	WJ30EJ	1	●	D32	6597616	332,00
DC170-20-04.500A1-WJ30EJ	WJ30EJ	1	●	D32	6597617	350,00
DC170-20-04.763A1-WJ30EJ	WJ30EJ	1	●	D32	6597618	350,00
DC170-20-04.800A1-WJ30EJ	WJ30EJ	1	●	D32	6597619	350,00
DC170-20-05.000A1-WJ30EJ	WJ30EJ	1	●	D32	6597620	350,00
DC170-20-05.500A1-WJ30EJ	WJ30EJ	1	●	D32	6597621	369,00
DC170-20-05.556A1-WJ30EJ	WJ30EJ	1	●	D32	6597622	369,00
DC170-20-05.800A1-WJ30EJ	WJ30EJ	1	●	D32	6597623	369,00
DC170-20-06.000A1-WJ30EJ	WJ30EJ	1	●	D32	6597624	369,00
DC170-20-06.100A1-WJ30EJ	WJ30EJ	1	●	D32	6597625	442,00
DC170-20-06.350A1-WJ30EJ	WJ30EJ	1	●	D32	6597626	442,00
DC170-20-06.500A1-WJ30EJ	WJ30EJ	1	●	D32	6597627	442,00
DC170-20-06.800A1-WJ30EJ	WJ30EJ	1	●	D32	6597628	442,00
DC170-20-07.000A1-WJ30EJ	WJ30EJ	1	●	D32	6597629	442,00
DC170-20-07.144A1-WJ30EJ	WJ30EJ	1	●	D32	6597630	442,00
DC170-20-07.400A1-WJ30EJ	WJ30EJ	1	●	D32	6597631	442,00
DC170-20-07.500A1-WJ30EJ	WJ30EJ	1	●	D32	6597632	442,00
DC170-20-07.938A1-WJ30EJ	WJ30EJ	1	●	D32	6597633	442,00
DC170-20-08.000A1-WJ30EJ	WJ30EJ	1	●	D32	6597634	442,00
DC170-20-08.300A1-WJ30EJ	WJ30EJ	1	●	D32	6597635	516,00
DC170-20-08.500A1-WJ30EJ	WJ30EJ	1	●	D32	6597636	516,00
DC170-20-08.731A1-WJ30EJ	WJ30EJ	1	●	D32	6597637	516,00
DC170-20-09.000A1-WJ30EJ	WJ30EJ	1	●	D32	6597638	516,00
DC170-20-09.525A1-WJ30EJ	WJ30EJ	1	●	D32	6597639	516,00
DC170-20-09.800A1-WJ30EJ	WJ30EJ	1	●	D32	6597640	516,00
DC170-20-10.000A1-WJ30EJ	WJ30EJ	1	●	D32	6597641	516,00

Bezeichnung / Designation	Sorte / Grade	VE / US		Disc. Gr.	Article No.	EURO Stück / piece
DC170-20-10.200A1-WJ30EJ	WJ30EJ	1	●	D32	6597642	700,00
DC170-20-10.319A1-WJ30EJ	WJ30EJ	1	●	D32	6597643	700,00
DC170-20-11.000A1-WJ30EJ	WJ30EJ	1	●	D32	6597644	700,00
DC170-20-11.113A1-WJ30EJ	WJ30EJ	1	●	D32	6597645	700,00
DC170-20-11.500A1-WJ30EJ	WJ30EJ	1	●	D32	6597646	700,00
DC170-20-11.800A1-WJ30EJ	WJ30EJ	1	●	D32	6597647	700,00
DC170-20-12.000A1-WJ30EJ	WJ30EJ	1	●	D32	6597649	700,00
DC170-20-12.700A1-WJ30EJ	WJ30EJ	1	●	D32	6597650	958,00
DC170-20-13.000A1-WJ30EJ	WJ30EJ	1	●	D32	6597651	958,00
DC170-20-14.000A1-WJ30EJ	WJ30EJ	1	●	D32	6597652	958,00
DC170-20-14.288A1-WJ30EJ	WJ30EJ	1	●	D32	6597653	1.253,00
DC170-20-15.000A1-WJ30EJ	WJ30EJ	1	●	D32	6597654	1.253,00
DC170-20-16.000A1-WJ30EJ	WJ30EJ	1	●	D32	6597655	1.253,00
DC170-25-03.000A1-WJ30EJ	WJ30EJ	1	●	D32	6901207	401,00
DC170-25-03.175A1-WJ30EJ	WJ30EJ	1	●	D32	6901208	401,00
DC170-25-03.500A1-WJ30EJ	WJ30EJ	1	●	D32	6901209	401,00
DC170-25-03.572A1-WJ30EJ	WJ30EJ	1	●	D32	6901250	401,00
DC170-25-03.969A1-WJ30EJ	WJ30EJ	1	●	D32	6901251	401,00
DC170-25-04.000A1-WJ30EJ	WJ30EJ	1	●	D32	6901252	401,00
DC170-25-04.500A1-WJ30EJ	WJ30EJ	1	●	D32	6901253	423,00
DC170-25-04.763A1-WJ30EJ	WJ30EJ	1	●	D32	6901254	423,00
DC170-25-04.800A1-WJ30EJ	WJ30EJ	1	●	D32	6901255	423,00
DC170-25-05.000A1-WJ30EJ	WJ30EJ	1	●	D32	6901256	423,00
DC170-25-05.500A1-WJ30EJ	WJ30EJ	1	●	D32	6901257	446,00
DC170-25-05.556A1-WJ30EJ	WJ30EJ	1	●	D32	6901258	446,00
DC170-25-06.000A1-WJ30EJ	WJ30EJ	1	●	D32	6901260	446,00
DC170-25-06.350A1-WJ30EJ	WJ30EJ	1	●	D32	6901262	535,00
DC170-25-06.500A1-WJ30EJ	WJ30EJ	1	●	D32	6901263	535,00
DC170-25-06.800A1-WJ30EJ	WJ30EJ	1	●	D32	6901264	535,00
DC170-25-07.000A1-WJ30EJ	WJ30EJ	1	●	D32	6901265	535,00
DC170-25-07.144A1-WJ30EJ	WJ30EJ	1	●	D32	6901266	535,00
DC170-25-07.938A1-WJ30EJ	WJ30EJ	1	●	D32	6901269	535,00
DC170-25-08.000A1-WJ30EJ	WJ30EJ	1	●	D32	6901270	535,00
DC170-25-08.500A1-WJ30EJ	WJ30EJ	1	●	D32	6939926	624,00
DC170-25-08.731A1-WJ30EJ	WJ30EJ	1	●	D32	6901273	624,00
DC170-25-09.000A1-WJ30EJ	WJ30EJ	1	●	D32	6901274	624,00
DC170-25-09.525A1-WJ30EJ	WJ30EJ	1	●	D32	6901275	624,00
DC170-25-10.000A1-WJ30EJ	WJ30EJ	1	●	D32	6901277	624,00
DC170-25-10.200A1-WJ30EJ	WJ30EJ	1	●	D32	6901278	847,00
DC170-25-11.000A1-WJ30EJ	WJ30EJ	1	●	D32	6901280	847,00
DC170-25-11.113A1-WJ30EJ	WJ30EJ	1	●	D32	6901281	847,00
DC170-25-12.000A1-WJ30EJ	WJ30EJ	1	●	D32	6901285	847,00
DC170-30-03.000A1-WJ30EJ	WJ30EJ	1	●	D32	6901286	473,00
DC170-30-03.175A1-WJ30EJ	WJ30EJ	1	●	D32	6901287	473,00
DC170-30-03.500A1-WJ30EJ	WJ30EJ	1	●	D32	6901288	473,00
DC170-30-04.000A1-WJ30EJ	WJ30EJ	1	●	D32	6901291	473,00
DC170-30-04.500A1-WJ30EJ	WJ30EJ	1	●	D32	6901292	499,00
DC170-30-04.763A1-WJ30EJ	WJ30EJ	1	●	D32	6901293	499,00
DC170-30-04.800A1-WJ30EJ	WJ30EJ	1	●	D32	6901294	499,00
DC170-30-05.000A1-WJ30EJ	WJ30EJ	1	●	D32	6901295	499,00
DC170-30-05.500A1-WJ30EJ	WJ30EJ	1	●	D32	6901296	526,00
DC170-30-06.000A1-WJ30EJ	WJ30EJ	1	●	D32	6901299	526,00
DC170-30-06.350A1-WJ30EJ	WJ30EJ	1	●	D32	6901301	631,00
DC170-30-06.500A1-WJ30EJ	WJ30EJ	1	●	D32	6901302	631,00
DC170-30-06.800A1-WJ30EJ	WJ30EJ	1	●	D32	6901303	631,00
DC170-30-07.000A1-WJ30EJ	WJ30EJ	1	●	D32	6901304	631,00
DC170-30-07.400A1-WJ30EJ	WJ30EJ	1	●	D32	6901306	631,00
DC170-30-07.938A1-WJ30EJ	WJ30EJ	1	●	D32	6901308	631,00
DC170-30-08.000A1-WJ30EJ	WJ30EJ	1	●	D32	6901309	631,00
DC170-30-08.500A1-WJ30EJ	WJ30EJ	1	●	D32	6901311	736,00
DC170-30-08.731A1-WJ30EJ	WJ30EJ	1	●	D32	6901312	736,00
DC170-30-09.000A1-WJ30EJ	WJ30EJ	1	●	D32	6901313	736,00
DC170-30-09.525A1-WJ30EJ	WJ30EJ	1	●	D32	6901314	736,00
DC170-30-10.000A1-WJ30EJ	WJ30EJ	1	●	D32	6901316	736,00
DC170-30-10.200A1-WJ30EJ	WJ30EJ	1	●	D32	6901317	999,00
DC170-30-11.000A1-WJ30EJ	WJ30EJ	1	●	D32	6901319	999,00
DC170-30-11.113A1-WJ30EJ	WJ30EJ	1	●	D32	6901320	999,00
DC170-30-12.000A1-WJ30EJ	WJ30EJ	1	●	D32	6901324	999,00
DC175-03-03.000A1-WJ30RZ	WJ30RZ	1	●	D30	8127829	110,00
DC175-03-03.100A1-WJ30RZ	WJ30RZ	1	●	D30	8127880	110,00

Bezeichnung / Designation	Sorte / Grade	VE / US		Disc. Gr.	Article No.	EURO Stück / piece
DC175-03-03.175A1-WJ30RZ	WJ30RZ	1	●	D30	8127881	110,00
DC175-03-03.200A1-WJ30RZ	WJ30RZ	1	●	D30	8127882	110,00
DC175-03-03.250A1-WJ30RZ	WJ30RZ	1	●	D30	8127883	110,00
DC175-03-03.300A1-WJ30RZ	WJ30RZ	1	●	D30	8127884	110,00
DC175-03-03.400A1-WJ30RZ	WJ30RZ	1	●	D30	8127885	110,00
DC175-03-03.500A1-WJ30RZ	WJ30RZ	1	●	D30	8127886	110,00
DC175-03-03.572A1-WJ30RZ	WJ30RZ	1	●	D30	8127887	110,00
DC175-03-03.600A1-WJ30RZ	WJ30RZ	1	●	D30	8127888	110,00
DC175-03-03.700A1-WJ30RZ	WJ30RZ	1	●	D30	8127889	110,00
DC175-03-03.800A1-WJ30RZ	WJ30RZ	1	●	D30	8127890	110,00
DC175-03-03.900A1-WJ30RZ	WJ30RZ	1	●	D30	8127891	110,00
DC175-03-03.969A1-WJ30RZ	WJ30RZ	1	●	D30	8127892	110,00
DC175-03-04.000A1-WJ30RZ	WJ30RZ	1	●	D30	8127893	110,00
DC175-03-04.100A1-WJ30RZ	WJ30RZ	1	●	D30	8127894	110,00
DC175-03-04.200A1-WJ30RZ	WJ30RZ	1	●	D30	8127895	110,00
DC175-03-04.300A1-WJ30RZ	WJ30RZ	1	●	D30	8127896	110,00
DC175-03-04.366A1-WJ30RZ	WJ30RZ	1	●	D30	8127897	110,00
DC175-03-04.400A1-WJ30RZ	WJ30RZ	1	●	D30	8127898	110,00
DC175-03-04.500A1-WJ30RZ	WJ30RZ	1	●	D30	8127899	110,00
DC175-03-04.600A1-WJ30RZ	WJ30RZ	1	●	D30	8127900	110,00
DC175-03-04.650A1-WJ30RZ	WJ30RZ	1	●	D30	8127901	110,00
DC175-03-04.700A1-WJ30RZ	WJ30RZ	1	●	D30	8127902	110,00
DC175-03-04.763A1-WJ30RZ	WJ30RZ	1	●	D30	8127903	110,00
DC175-03-04.800A1-WJ30RZ	WJ30RZ	1	●	D30	8127904	110,00
DC175-03-04.900A1-WJ30RZ	WJ30RZ	1	●	D30	8127905	110,00
DC175-03-05.000A1-WJ30RZ	WJ30RZ	1	●	D30	8127906	110,00
DC175-03-05.100A1-WJ30RZ	WJ30RZ	1	●	D30	8127907	110,00
DC175-03-05.159A1-WJ30RZ	WJ30RZ	1	●	D30	8127908	110,00
DC175-03-05.200A1-WJ30RZ	WJ30RZ	1	●	D30	8127909	110,00
DC175-03-05.300A1-WJ30RZ	WJ30RZ	1	●	D30	8127910	110,00
DC175-03-05.400A1-WJ30RZ	WJ30RZ	1	●	D30	8127911	110,00
DC175-03-05.500A1-WJ30RZ	WJ30RZ	1	●	D30	8127912	110,00
DC175-03-05.550A1-WJ30RZ	WJ30RZ	1	●	D30	8127913	110,00
DC175-03-05.556A1-WJ30RZ	WJ30RZ	1	●	D30	8127914	110,00
DC175-03-05.600A1-WJ30RZ	WJ30RZ	1	●	D30	8127915	110,00
DC175-03-05.700A1-WJ30RZ	WJ30RZ	1	●	D30	8127916	110,00
DC175-03-05.800A1-WJ30RZ	WJ30RZ	1	●	D30	8127917	110,00
DC175-03-05.900A1-WJ30RZ	WJ30RZ	1	●	D30	8127918	110,00
DC175-03-05.953A1-WJ30RZ	WJ30RZ	1	●	D30	8127919	110,00
DC175-03-06.000A1-WJ30RZ	WJ30RZ	1	●	D30	8127920	110,00
DC175-03-06.100A1-WJ30RZ	WJ30RZ	1	●	D30	8127921	132,00
DC175-03-06.200A1-WJ30RZ	WJ30RZ	1	●	D30	8127922	132,00
DC175-03-06.300A1-WJ30RZ	WJ30RZ	1	●	D30	8127923	132,00
DC175-03-06.350A1-WJ30RZ	WJ30RZ	1	●	D30	8127924	132,00
DC175-03-06.400A1-WJ30RZ	WJ30RZ	1	●	D30	8127925	132,00
DC175-03-06.500A1-WJ30RZ	WJ30RZ	1	●	D30	8127926	132,00
DC175-03-06.600A1-WJ30RZ	WJ30RZ	1	●	D30	8127927	132,00
DC175-03-06.700A1-WJ30RZ	WJ30RZ	1	●	D30	8127928	132,00
DC175-03-06.747A1-WJ30RZ	WJ30RZ	1	●	D30	8127929	132,00
DC175-03-06.800A1-WJ30RZ	WJ30RZ	1	●	D30	8127930	132,00
DC175-03-06.900A1-WJ30RZ	WJ30RZ	1	●	D30	8127931	132,00
DC175-03-07.000A1-WJ30RZ	WJ30RZ	1	●	D30	8127932	132,00
DC175-03-07.100A1-WJ30RZ	WJ30RZ	1	●	D30	8127933	132,00
DC175-03-07.144A1-WJ30RZ	WJ30RZ	1	●	D30	8127934	132,00
DC175-03-07.200A1-WJ30RZ	WJ30RZ	1	●	D30	8127935	132,00
DC175-03-07.300A1-WJ30RZ	WJ30RZ	1	●	D30	8127936	132,00
DC175-03-07.400A1-WJ30RZ	WJ30RZ	1	●	D30	8127937	132,00
DC175-03-07.500A1-WJ30RZ	WJ30RZ	1	●	D30	8127938	132,00
DC175-03-07.541A1-WJ30RZ	WJ30RZ	1	●	D30	8127939	132,00
DC175-03-07.600A1-WJ30RZ	WJ30RZ	1	●	D30	8127940	132,00
DC175-03-07.700A1-WJ30RZ	WJ30RZ	1	●	D30	8127941	132,00
DC175-03-07.800A1-WJ30RZ	WJ30RZ	1	●	D30	8127942	132,00
DC175-03-07.900A1-WJ30RZ	WJ30RZ	1	●	D30	8127943	132,00
DC175-03-07.938A1-WJ30RZ	WJ30RZ	1	●	D30	8127944	132,00
DC175-03-08.000A1-WJ30RZ	WJ30RZ	1	●	D30	8127945	132,00
DC175-03-08.100A1-WJ30RZ	WJ30RZ	1	●	D30	8127946	154,00
DC175-03-08.200A1-WJ30RZ	WJ30RZ	1	●	D30	8127947	154,00
DC175-03-08.300A1-WJ30RZ	WJ30RZ	1	●	D30	8127948	154,00
DC175-03-08.334A1-WJ30RZ	WJ30RZ	1	●	D30	8127949	154,00
DC175-03-08.400A1-WJ30RZ	WJ30RZ	1	●	D30	8127950	154,00

Bezeichnung / Designation	Sorte / Grade	VE / US		Disc. Gr.	Article No.	EURO Stück / piece
DC175-03-08.500A1-WJ30RZ	WJ30RZ	1	●	D30	8127951	154,00
DC175-03-08.600A1-WJ30RZ	WJ30RZ	1	●	D30	8127952	154,00
DC175-03-08.700A1-WJ30RZ	WJ30RZ	1	●	D30	8127953	154,00
DC175-03-08.731A1-WJ30RZ	WJ30RZ	1	●	D30	8127954	154,00
DC175-03-08.800A1-WJ30RZ	WJ30RZ	1	●	D30	8127955	154,00
DC175-03-08.900A1-WJ30RZ	WJ30RZ	1	●	D30	8127956	154,00
DC175-03-09.000A1-WJ30RZ	WJ30RZ	1	●	D30	8127957	154,00
DC175-03-09.100A1-WJ30RZ	WJ30RZ	1	●	D30	8127958	154,00
DC175-03-09.128A1-WJ30RZ	WJ30RZ	1	●	D30	8127959	154,00
DC175-03-09.200A1-WJ30RZ	WJ30RZ	1	●	D30	8127960	154,00
DC175-03-09.300A1-WJ30RZ	WJ30RZ	1	●	D30	8127961	154,00
DC175-03-09.400A1-WJ30RZ	WJ30RZ	1	●	D30	8127962	154,00
DC175-03-09.500A1-WJ30RZ	WJ30RZ	1	●	D30	8127963	154,00
DC175-03-09.525A1-WJ30RZ	WJ30RZ	1	●	D30	8127964	154,00
DC175-03-09.600A1-WJ30RZ	WJ30RZ	1	●	D30	8127965	154,00
DC175-03-09.700A1-WJ30RZ	WJ30RZ	1	●	D30	8127966	154,00
DC175-03-09.800A1-WJ30RZ	WJ30RZ	1	●	D30	8127967	154,00
DC175-03-09.900A1-WJ30RZ	WJ30RZ	1	●	D30	8127969	154,00
DC175-03-09.922A1-WJ30RZ	WJ30RZ	1	●	D30	8127968	154,00
DC175-03-10.000A1-WJ30RZ	WJ30RZ	1	●	D30	8127970	154,00
DC175-03-10.100A1-WJ30RZ	WJ30RZ	1	●	D30	8127971	209,00
DC175-03-10.200A1-WJ30RZ	WJ30RZ	1	●	D30	8127972	209,00
DC175-03-10.300A1-WJ30RZ	WJ30RZ	1	●	D30	8127973	209,00
DC175-03-10.319A1-WJ30RZ	WJ30RZ	1	●	D30	8127974	209,00
DC175-03-10.400A1-WJ30RZ	WJ30RZ	1	●	D30	8127975	209,00
DC175-03-10.500A1-WJ30RZ	WJ30RZ	1	●	D30	8127976	209,00
DC175-03-10.600A1-WJ30RZ	WJ30RZ	1	●	D30	8127978	209,00
DC175-03-10.700A1-WJ30RZ	WJ30RZ	1	●	D30	8127979	209,00
DC175-03-10.716A1-WJ30RZ	WJ30RZ	1	●	D30	8127977	209,00
DC175-03-10.800A1-WJ30RZ	WJ30RZ	1	●	D30	8127980	209,00
DC175-03-10.900A1-WJ30RZ	WJ30RZ	1	●	D30	8127981	209,00
DC175-03-11.000A1-WJ30RZ	WJ30RZ	1	●	D30	8127982	209,00
DC175-03-11.100A1-WJ30RZ	WJ30RZ	1	●	D30	8127983	209,00
DC175-03-11.113A1-WJ30RZ	WJ30RZ	1	●	D30	8127984	209,00
DC175-03-11.200A1-WJ30RZ	WJ30RZ	1	●	D30	8127985	209,00
DC175-03-11.300A1-WJ30RZ	WJ30RZ	1	●	D30	8127986	209,00
DC175-03-11.400A1-WJ30RZ	WJ30RZ	1	●	D30	8127987	209,00
DC175-03-11.500A1-WJ30RZ	WJ30RZ	1	●	D30	8127988	209,00
DC175-03-11.509A1-WJ30RZ	WJ30RZ	1	●	D30	8127989	209,00
DC175-03-11.600A1-WJ30RZ	WJ30RZ	1	●	D30	8127990	209,00
DC175-03-11.700A1-WJ30RZ	WJ30RZ	1	●	D30	8127991	209,00
DC175-03-11.800A1-WJ30RZ	WJ30RZ	1	●	D30	8127992	209,00
DC175-03-11.900A1-WJ30RZ	WJ30RZ	1	●	D30	8127993	209,00
DC175-03-12.000A1-WJ30RZ	WJ30RZ	1	●	D30	8127995	209,00
DC175-03-12.100A1-WJ30RZ	WJ30RZ	1	●	D30	8127996	286,00
DC175-03-12.200A1-WJ30RZ	WJ30RZ	1	●	D30	8127997	286,00
DC175-03-12.300A1-WJ30RZ	WJ30RZ	1	●	D30	8127998	286,00
DC175-03-12.303A1-WJ30RZ	WJ30RZ	1	●	D30	8127999	286,00
DC175-03-12.500A1-WJ30RZ	WJ30RZ	1	●	D30	8128000	286,00
DC175-03-12.600A1-WJ30RZ	WJ30RZ	1	●	D30	8128001	286,00
DC175-03-12.700A1-WJ30RZ	WJ30RZ	1	●	D30	8128002	286,00
DC175-03-12.900A1-WJ30RZ	WJ30RZ	1	●	D30	8128003	286,00
DC175-03-13.000A1-WJ30RZ	WJ30RZ	1	●	D30	8128004	286,00
DC175-03-13.100A1-WJ30RZ	WJ30RZ	1	●	D30	8128005	286,00
DC175-03-13.300A1-WJ30RZ	WJ30RZ	1	●	D30	8128006	286,00
DC175-03-13.494A1-WJ30RZ	WJ30RZ	1	●	D30	8128007	286,00
DC175-03-13.500A1-WJ30RZ	WJ30RZ	1	●	D30	8128008	286,00
DC175-03-13.800A1-WJ30RZ	WJ30RZ	1	●	D30	8128009	286,00
DC175-03-14.000A1-WJ30RZ	WJ30RZ	1	●	D30	8128010	286,00
DC175-03-14.200A1-WJ30RZ	WJ30RZ	1	●	D30	8128011	374,00
DC175-03-14.288A1-WJ30RZ	WJ30RZ	1	●	D30	8128012	374,00
DC175-03-14.500A1-WJ30RZ	WJ30RZ	1	●	D30	8128013	374,00
DC175-03-14.750A1-WJ30RZ	WJ30RZ	1	●	D30	8128014	374,00
DC175-03-15.000A1-WJ30RZ	WJ30RZ	1	●	D30	8128015	374,00
DC175-03-15.100A1-WJ30RZ	WJ30RZ	1	●	D30	8128016	374,00
DC175-03-15.200A1-WJ30RZ	WJ30RZ	1	●	D30	8128017	374,00
DC175-03-15.300A1-WJ30RZ	WJ30RZ	1	●	D30	8128018	374,00
DC175-03-15.500A1-WJ30RZ	WJ30RZ	1	●	D30	8128019	374,00
DC175-03-15.800A1-WJ30RZ	WJ30RZ	1	●	D30	8128020	374,00
DC175-03-16.000A1-WJ30RZ	WJ30RZ	1	●	D30	8128021	374,00

Bezeichnung / Designation	Sorte / Grade	VE / US		Disc. Gr.	Article No.	EURO Stück / piece
DC175-03-16.500A1-WJ30RZ	WJ30RZ	1	●	D30	8128022	474,00
DC175-03-17.500A1-WJ30RZ	WJ30RZ	1	●	D30	8128024	474,00
DC175-03-18.000A1-WJ30RZ	WJ30RZ	1	●	D30	8128025	474,00
DC175-03-18.500A1-WJ30RZ	WJ30RZ	1	●	D30	8128026	573,00
DC175-03-19.000A1-WJ30RZ	WJ30RZ	1	●	D30	8128027	573,00
DC175-03-19.500A1-WJ30RZ	WJ30RZ	1	●	D30	8128028	573,00
DC175-03-20.000A1-WJ30RZ	WJ30RZ	1	●	D30	8128029	573,00
DC175-05-03.000A1-WJ30RZ	WJ30RZ	1	●	D30	8128030	138,00
DC175-05-03.100A1-WJ30RZ	WJ30RZ	1	●	D30	8128031	138,00
DC175-05-03.175A1-WJ30RZ	WJ30RZ	1	●	D30	8128032	138,00
DC175-05-03.200A1-WJ30RZ	WJ30RZ	1	●	D30	8128033	138,00
DC175-05-03.250A1-WJ30RZ	WJ30RZ	1	●	D30	8128034	138,00
DC175-05-03.300A1-WJ30RZ	WJ30RZ	1	●	D30	8128035	138,00
DC175-05-03.400A1-WJ30RZ	WJ30RZ	1	●	D30	8128036	138,00
DC175-05-03.500A1-WJ30RZ	WJ30RZ	1	●	D30	8128037	138,00
DC175-05-03.572A1-WJ30RZ	WJ30RZ	1	●	D30	8128038	138,00
DC175-05-03.600A1-WJ30RZ	WJ30RZ	1	●	D30	8128039	138,00
DC175-05-03.700A1-WJ30RZ	WJ30RZ	1	●	D30	8128040	138,00
DC175-05-03.800A1-WJ30RZ	WJ30RZ	1	●	D30	8128041	138,00
DC175-05-03.900A1-WJ30RZ	WJ30RZ	1	●	D30	8128042	138,00
DC175-05-03.969A1-WJ30RZ	WJ30RZ	1	●	D30	8128043	138,00
DC175-05-04.000A1-WJ30RZ	WJ30RZ	1	●	D30	8128044	138,00
DC175-05-04.100A1-WJ30RZ	WJ30RZ	1	●	D30	8128045	138,00
DC175-05-04.200A1-WJ30RZ	WJ30RZ	1	●	D30	8128046	138,00
DC175-05-04.300A1-WJ30RZ	WJ30RZ	1	●	D30	8128047	138,00
DC175-05-04.366A1-WJ30RZ	WJ30RZ	1	●	D30	8128048	138,00
DC175-05-04.400A1-WJ30RZ	WJ30RZ	1	●	D30	8128049	138,00
DC175-05-04.500A1-WJ30RZ	WJ30RZ	1	●	D30	8128050	138,00
DC175-05-04.600A1-WJ30RZ	WJ30RZ	1	●	D30	8128051	138,00
DC175-05-04.650A1-WJ30RZ	WJ30RZ	1	●	D30	8128052	138,00
DC175-05-04.700A1-WJ30RZ	WJ30RZ	1	●	D30	8128053	138,00
DC175-05-04.763A1-WJ30RZ	WJ30RZ	1	●	D30	8128054	138,00
DC175-05-04.800A1-WJ30RZ	WJ30RZ	1	●	D30	8128055	138,00
DC175-05-04.900A1-WJ30RZ	WJ30RZ	1	●	D30	8128056	138,00
DC175-05-05.000A1-WJ30RZ	WJ30RZ	1	●	D30	8128057	138,00
DC175-05-05.100A1-WJ30RZ	WJ30RZ	1	●	D30	8128058	138,00
DC175-05-05.159A1-WJ30RZ	WJ30RZ	1	●	D30	8128059	138,00
DC175-05-05.200A1-WJ30RZ	WJ30RZ	1	●	D30	8128060	138,00
DC175-05-05.300A1-WJ30RZ	WJ30RZ	1	●	D30	8128061	138,00
DC175-05-05.400A1-WJ30RZ	WJ30RZ	1	●	D30	8128062	138,00
DC175-05-05.500A1-WJ30RZ	WJ30RZ	1	●	D30	8128063	138,00
DC175-05-05.550A1-WJ30RZ	WJ30RZ	1	●	D30	8128064	138,00
DC175-05-05.556A1-WJ30RZ	WJ30RZ	1	●	D30	8128065	138,00
DC175-05-05.600A1-WJ30RZ	WJ30RZ	1	●	D30	8128066	138,00
DC175-05-05.700A1-WJ30RZ	WJ30RZ	1	●	D30	8128067	138,00
DC175-05-05.800A1-WJ30RZ	WJ30RZ	1	●	D30	8128068	138,00
DC175-05-05.900A1-WJ30RZ	WJ30RZ	1	●	D30	8128069	138,00
DC175-05-05.953A1-WJ30RZ	WJ30RZ	1	●	D30	8128070	138,00
DC175-05-06.000A1-WJ30RZ	WJ30RZ	1	●	D30	8128071	138,00
DC175-05-06.100A1-WJ30RZ	WJ30RZ	1	●	D30	8128072	165,00
DC175-05-06.200A1-WJ30RZ	WJ30RZ	1	●	D30	8128073	165,00
DC175-05-06.300A1-WJ30RZ	WJ30RZ	1	●	D30	8128074	165,00
DC175-05-06.350A1-WJ30RZ	WJ30RZ	1	●	D30	8128075	165,00
DC175-05-06.400A1-WJ30RZ	WJ30RZ	1	●	D30	8128076	165,00
DC175-05-06.500A1-WJ30RZ	WJ30RZ	1	●	D30	8128077	165,00
DC175-05-06.600A1-WJ30RZ	WJ30RZ	1	●	D30	8128078	165,00
DC175-05-06.700A1-WJ30RZ	WJ30RZ	1	●	D30	8128079	165,00
DC175-05-06.747A1-WJ30RZ	WJ30RZ	1	●	D30	8128080	165,00
DC175-05-06.800A1-WJ30RZ	WJ30RZ	1	●	D30	8128081	165,00
DC175-05-06.900A1-WJ30RZ	WJ30RZ	1	●	D30	8128082	165,00
DC175-05-07.000A1-WJ30RZ	WJ30RZ	1	●	D30	8128083	165,00
DC175-05-07.100A1-WJ30RZ	WJ30RZ	1	●	D30	8128084	165,00
DC175-05-07.144A1-WJ30RZ	WJ30RZ	1	●	D30	8128085	165,00
DC175-05-07.200A1-WJ30RZ	WJ30RZ	1	●	D30	8128086	165,00
DC175-05-07.300A1-WJ30RZ	WJ30RZ	1	●	D30	8128087	165,00
DC175-05-07.400A1-WJ30RZ	WJ30RZ	1	●	D30	8128088	165,00
DC175-05-07.500A1-WJ30RZ	WJ30RZ	1	●	D30	8128089	165,00
DC175-05-07.541A1-WJ30RZ	WJ30RZ	1	●	D30	8128090	165,00
DC175-05-07.600A1-WJ30RZ	WJ30RZ	1	●	D30	8128091	165,00
DC175-05-07.700A1-WJ30RZ	WJ30RZ	1	●	D30	8128092	165,00

Bezeichnung / Designation	Sorte / Grade	VE / US		Disc. Gr.	Article No.	EURO Stück / piece
DC175-05-07.800A1-WJ30RZ	WJ30RZ	1	●	D30	8128093	165,00
DC175-05-07.900A1-WJ30RZ	WJ30RZ	1	●	D30	8128094	165,00
DC175-05-07.938A1-WJ30RZ	WJ30RZ	1	●	D30	8128095	165,00
DC175-05-08.000A1-WJ30RZ	WJ30RZ	1	●	D30	8128096	165,00
DC175-05-08.100A1-WJ30RZ	WJ30RZ	1	●	D30	8128097	193,00
DC175-05-08.200A1-WJ30RZ	WJ30RZ	1	●	D30	8128098	193,00
DC175-05-08.300A1-WJ30RZ	WJ30RZ	1	●	D30	8128099	193,00
DC175-05-08.334A1-WJ30RZ	WJ30RZ	1	●	D30	8128100	193,00
DC175-05-08.400A1-WJ30RZ	WJ30RZ	1	●	D30	8128101	193,00
DC175-05-08.500A1-WJ30RZ	WJ30RZ	1	●	D30	8128102	193,00
DC175-05-08.600A1-WJ30RZ	WJ30RZ	1	●	D30	8128103	193,00
DC175-05-08.700A1-WJ30RZ	WJ30RZ	1	●	D30	8128104	193,00
DC175-05-08.731A1-WJ30RZ	WJ30RZ	1	●	D30	8128105	193,00
DC175-05-08.800A1-WJ30RZ	WJ30RZ	1	●	D30	8128106	193,00
DC175-05-08.900A1-WJ30RZ	WJ30RZ	1	●	D30	8128107	193,00
DC175-05-09.000A1-WJ30RZ	WJ30RZ	1	●	D30	8128108	193,00
DC175-05-09.100A1-WJ30RZ	WJ30RZ	1	●	D30	8128109	193,00
DC175-05-09.128A1-WJ30RZ	WJ30RZ	1	●	D30	8128110	193,00
DC175-05-09.200A1-WJ30RZ	WJ30RZ	1	●	D30	8128111	193,00
DC175-05-09.300A1-WJ30RZ	WJ30RZ	1	●	D30	8128112	193,00
DC175-05-09.400A1-WJ30RZ	WJ30RZ	1	●	D30	8128113	193,00
DC175-05-09.500A1-WJ30RZ	WJ30RZ	1	●	D30	8128114	193,00
DC175-05-09.525A1-WJ30RZ	WJ30RZ	1	●	D30	8128115	193,00
DC175-05-09.600A1-WJ30RZ	WJ30RZ	1	●	D30	8128116	193,00
DC175-05-09.700A1-WJ30RZ	WJ30RZ	1	●	D30	8128117	193,00
DC175-05-09.800A1-WJ30RZ	WJ30RZ	1	●	D30	8128118	193,00
DC175-05-09.900A1-WJ30RZ	WJ30RZ	1	●	D30	8128119	193,00
DC175-05-09.922A1-WJ30RZ	WJ30RZ	1	●	D30	8128120	193,00
DC175-05-10.000A1-WJ30RZ	WJ30RZ	1	●	D30	8128121	193,00
DC175-05-10.100A1-WJ30RZ	WJ30RZ	1	●	D30	8128122	262,00
DC175-05-10.200A1-WJ30RZ	WJ30RZ	1	●	D30	8128123	262,00
DC175-05-10.300A1-WJ30RZ	WJ30RZ	1	●	D30	8128124	262,00
DC175-05-10.319A1-WJ30RZ	WJ30RZ	1	●	D30	8128125	262,00
DC175-05-10.400A1-WJ30RZ	WJ30RZ	1	●	D30	8128126	262,00
DC175-05-10.500A1-WJ30RZ	WJ30RZ	1	●	D30	8128127	262,00
DC175-05-10.600A1-WJ30RZ	WJ30RZ	1	●	D30	8128129	262,00
DC175-05-10.700A1-WJ30RZ	WJ30RZ	1	●	D30	8128130	262,00
DC175-05-10.716A1-WJ30RZ	WJ30RZ	1	●	D30	8128128	262,00
DC175-05-10.800A1-WJ30RZ	WJ30RZ	1	●	D30	8128131	262,00
DC175-05-10.900A1-WJ30RZ	WJ30RZ	1	●	D30	8128132	262,00
DC175-05-11.000A1-WJ30RZ	WJ30RZ	1	●	D30	8128133	262,00
DC175-05-11.100A1-WJ30RZ	WJ30RZ	1	●	D30	8128134	262,00
DC175-05-11.113A1-WJ30RZ	WJ30RZ	1	●	D30	8128135	262,00
DC175-05-11.200A1-WJ30RZ	WJ30RZ	1	●	D30	8128136	262,00
DC175-05-11.300A1-WJ30RZ	WJ30RZ	1	●	D30	8128137	262,00
DC175-05-11.400A1-WJ30RZ	WJ30RZ	1	●	D30	8128138	262,00
DC175-05-11.500A1-WJ30RZ	WJ30RZ	1	●	D30	8128139	262,00
DC175-05-11.509A1-WJ30RZ	WJ30RZ	1	●	D30	8128140	262,00
DC175-05-11.600A1-WJ30RZ	WJ30RZ	1	●	D30	8128141	262,00
DC175-05-11.700A1-WJ30RZ	WJ30RZ	1	●	D30	8128142	262,00
DC175-05-11.800A1-WJ30RZ	WJ30RZ	1	●	D30	8128143	262,00
DC175-05-11.900A1-WJ30RZ	WJ30RZ	1	●	D30	8128144	262,00
DC175-05-12.000A1-WJ30RZ	WJ30RZ	1	●	D30	8128146	262,00
DC175-05-12.100A1-WJ30RZ	WJ30RZ	1	●	D30	8128147	358,00
DC175-05-12.200A1-WJ30RZ	WJ30RZ	1	●	D30	8128148	358,00
DC175-05-12.300A1-WJ30RZ	WJ30RZ	1	●	D30	8128149	358,00
DC175-05-12.303A1-WJ30RZ	WJ30RZ	1	●	D30	8128150	358,00
DC175-05-12.500A1-WJ30RZ	WJ30RZ	1	●	D30	8128151	358,00
DC175-05-12.600A1-WJ30RZ	WJ30RZ	1	●	D30	8128152	358,00
DC175-05-12.700A1-WJ30RZ	WJ30RZ	1	●	D30	8128153	358,00
DC175-05-12.800A1-WJ30RZ	WJ30RZ	1	●	D30	8128154	358,00
DC175-05-13.000A1-WJ30RZ	WJ30RZ	1	●	D30	8128155	358,00
DC175-05-13.100A1-WJ30RZ	WJ30RZ	1	●	D30	8128156	358,00
DC175-05-13.300A1-WJ30RZ	WJ30RZ	1	●	D30	8128157	358,00
DC175-05-13.494A1-WJ30RZ	WJ30RZ	1	●	D30	8128158	358,00
DC175-05-13.500A1-WJ30RZ	WJ30RZ	1	●	D30	8128159	358,00
DC175-05-13.800A1-WJ30RZ	WJ30RZ	1	●	D30	8128160	358,00
DC175-05-14.000A1-WJ30RZ	WJ30RZ	1	●	D30	8128161	358,00
DC175-05-14.200A1-WJ30RZ	WJ30RZ	1	●	D30	8128162	468,00
DC175-05-14.288A1-WJ30RZ	WJ30RZ	1	●	D30	8128163	468,00

Bezeichnung / Designation	Sorte / Grade	VE / US		Disc. Gr.	Article No.	EURO Stück / piece
DC175-05-14.400A1-WJ30RZ	WJ30RZ	1	●	D30	8128164	468,00
DC175-05-14.500A1-WJ30RZ	WJ30RZ	1	●	D30	8128165	468,00
DC175-05-14.800A1-WJ30RZ	WJ30RZ	1	●	D30	8128166	468,00
DC175-05-15.000A1-WJ30RZ	WJ30RZ	1	●	D30	8128167	468,00
DC175-05-15.100A1-WJ30RZ	WJ30RZ	1	●	D30	8128168	468,00
DC175-05-15.300A1-WJ30RZ	WJ30RZ	1	●	D30	8128169	468,00
DC175-05-15.500A1-WJ30RZ	WJ30RZ	1	●	D30	8128170	468,00
DC175-05-15.800A1-WJ30RZ	WJ30RZ	1	●	D30	8128171	468,00
DC175-05-15.875A1-WJ30RZ	WJ30RZ	1	●	D30	8128172	468,00
DC175-05-16.000A1-WJ30RZ	WJ30RZ	1	●	D30	8128173	468,00
DC175-05-16.500A1-WJ30RZ	WJ30RZ	1	●	D30	8128174	592,00
DC175-05-17.000A1-WJ30RZ	WJ30RZ	1	●	D30	8128175	592,00
DC175-05-17.500A1-WJ30RZ	WJ30RZ	1	●	D30	8128176	592,00
DC175-05-18.000A1-WJ30RZ	WJ30RZ	1	●	D30	8128177	592,00
DC175-05-18.500A1-WJ30RZ	WJ30RZ	1	●	D30	8128178	716,00
DC175-05-19.000A1-WJ30RZ	WJ30RZ	1	●	D30	8128179	716,00
DC175-05-19.500A1-WJ30RZ	WJ30RZ	1	●	D30	8128180	716,00
DC175-05-20.000A1-WJ30RZ	WJ30RZ	1	●	D30	8128181	716,00
DC175-08-03.000A1-WJ30RY	WJ30RY	1	●	D31	8128182	220,00
DC175-08-03.100A1-WJ30RY	WJ30RY	1	●	D31	8128183	220,00
DC175-08-03.175A1-WJ30RY	WJ30RY	1	●	D31	8128184	220,00
DC175-08-03.200A1-WJ30RY	WJ30RY	1	●	D31	8128185	220,00
DC175-08-03.300A1-WJ30RY	WJ30RY	1	●	D31	8128186	220,00
DC175-08-03.400A1-WJ30RY	WJ30RY	1	●	D31	8128187	220,00
DC175-08-03.500A1-WJ30RY	WJ30RY	1	●	D31	8128188	220,00
DC175-08-03.700A1-WJ30RY	WJ30RY	1	●	D31	8128189	220,00
DC175-08-03.800A1-WJ30RY	WJ30RY	1	●	D31	8128190	220,00
DC175-08-03.900A1-WJ30RY	WJ30RY	1	●	D31	8128191	220,00
DC175-08-04.000A1-WJ30RY	WJ30RY	1	●	D31	8128192	220,00
DC175-08-04.100A1-WJ30RY	WJ30RY	1	●	D31	8128193	220,00
DC175-08-04.200A1-WJ30RY	WJ30RY	1	●	D31	8128194	220,00
DC175-08-04.300A1-WJ30RY	WJ30RY	1	●	D31	8128195	220,00
DC175-08-04.500A1-WJ30RY	WJ30RY	1	●	D31	8128196	220,00
DC175-08-04.700A1-WJ30RY	WJ30RY	1	●	D31	8128197	220,00
DC175-08-04.763A1-WJ30RY	WJ30RY	1	●	D31	8128198	220,00
DC175-08-04.800A1-WJ30RY	WJ30RY	1	●	D31	8128199	220,00
DC175-08-05.000A1-WJ30RY	WJ30RY	1	●	D31	8128200	220,00
DC175-08-05.100A1-WJ30RY	WJ30RY	1	●	D31	8128201	220,00
DC175-08-05.200A1-WJ30RY	WJ30RY	1	●	D31	8128202	220,00
DC175-08-05.500A1-WJ30RY	WJ30RY	1	●	D31	8128203	220,00
DC175-08-05.600A1-WJ30RY	WJ30RY	1	●	D31	8128204	220,00
DC175-08-05.800A1-WJ30RY	WJ30RY	1	●	D31	8128205	220,00
DC175-08-06.000A1-WJ30RY	WJ30RY	1	●	D31	8128206	220,00
DC175-08-06.100A1-WJ30RY	WJ30RY	1	●	D31	8128207	264,00
DC175-08-06.200A1-WJ30RY	WJ30RY	1	●	D31	8128208	264,00
DC175-08-06.300A1-WJ30RY	WJ30RY	1	●	D31	8128209	264,00
DC175-08-06.350A1-WJ30RY	WJ30RY	1	●	D31	8128210	264,00
DC175-08-06.400A1-WJ30RY	WJ30RY	1	●	D31	8128211	264,00
DC175-08-06.500A1-WJ30RY	WJ30RY	1	●	D31	8128212	264,00
DC175-08-06.600A1-WJ30RY	WJ30RY	1	●	D31	8128213	264,00
DC175-08-06.700A1-WJ30RY	WJ30RY	1	●	D31	8128214	264,00
DC175-08-06.800A1-WJ30RY	WJ30RY	1	●	D31	8128215	264,00
DC175-08-06.900A1-WJ30RY	WJ30RY	1	●	D31	8128216	264,00
DC175-08-07.000A1-WJ30RY	WJ30RY	1	●	D31	8128217	264,00
DC175-08-07.144A1-WJ30RY	WJ30RY	1	●	D31	8128218	264,00
DC175-08-07.500A1-WJ30RY	WJ30RY	1	●	D31	8128219	264,00
DC175-08-07.600A1-WJ30RY	WJ30RY	1	●	D31	8128220	264,00
DC175-08-07.700A1-WJ30RY	WJ30RY	1	●	D31	8128221	264,00
DC175-08-08.000A1-WJ30RY	WJ30RY	1	●	D31	8128222	264,00
DC175-08-08.100A1-WJ30RY	WJ30RY	1	●	D31	8128223	308,00
DC175-08-08.200A1-WJ30RY	WJ30RY	1	●	D31	8128224	308,00
DC175-08-08.400A1-WJ30RY	WJ30RY	1	●	D31	8128225	308,00
DC175-08-08.500A1-WJ30RY	WJ30RY	1	●	D31	8128226	308,00
DC175-08-08.600A1-WJ30RY	WJ30RY	1	●	D31	8128227	308,00
DC175-08-08.700A1-WJ30RY	WJ30RY	1	●	D31	8128228	308,00
DC175-08-08.800A1-WJ30RY	WJ30RY	1	●	D31	8128229	308,00
DC175-08-09.000A1-WJ30RY	WJ30RY	1	●	D31	8128230	308,00
DC175-08-09.200A1-WJ30RY	WJ30RY	1	●	D31	8128231	308,00
DC175-08-09.300A1-WJ30RY	WJ30RY	1	●	D31	8128232	308,00
DC175-08-09.500A1-WJ30RY	WJ30RY	1	●	D31	8128233	308,00

Bezeichnung / Designation	Sorte / Grade	VE / US		Disc. Gr.	Article No.	EURO Stück / piece
DC175-08-09.800A1-WJ30RY	WJ30RY	1	●	D31	8128234	308,00
DC175-08-10.000A1-WJ30RY	WJ30RY	1	●	D31	8128235	308,00
DC175-08-10.200A1-WJ30RY	WJ30RY	1	●	D31	8128236	418,00
DC175-08-10.500A1-WJ30RY	WJ30RY	1	●	D31	8128237	418,00
DC175-08-11.000A1-WJ30RY	WJ30RY	1	●	D31	8128238	418,00
DC175-08-11.500A1-WJ30RY	WJ30RY	1	●	D31	8128239	418,00
DC175-08-12.000A1-WJ30RY	WJ30RY	1	●	D31	8128240	418,00
DC175-08-12.500A1-WJ30RY	WJ30RY	1	●	D31	8128241	573,00
DC175-08-13.000A1-WJ30RY	WJ30RY	1	●	D31	8128242	573,00
DC175-08-14.000A1-WJ30RY	WJ30RY	1	●	D31	8128243	573,00
DC175-08-15.000A1-WJ30RY	WJ30RY	1	●	D31	8128244	749,00
DC175-08-16.000A1-WJ30RY	WJ30RY	1	●	D31	8128245	749,00
DC180-03-03.000A1-WJ30EZ	WJ30EZ	1	●	D30	8324790*	105,00
DC180-03-03.100A1-WJ30EZ	WJ30EZ	1	●	D30	8324791*	105,00
DC180-03-03.175A1-WJ30EZ	WJ30EZ	1	●	D30	8324792*	105,00
DC180-03-03.200A1-WJ30EZ	WJ30EZ	1	●	D30	8324793*	105,00
DC180-03-03.300A1-WJ30EZ	WJ30EZ	1	●	D30	8324794*	105,00
DC180-03-03.400A1-WJ30EZ	WJ30EZ	1	●	D30	8324795*	105,00
DC180-03-03.500A1-WJ30EZ	WJ30EZ	1	●	D30	8324796*	105,00
DC180-03-03.572A1-WJ30EZ	WJ30EZ	1	●	D30	8324797*	105,00
DC180-03-03.600A1-WJ30EZ	WJ30EZ	1	●	D30	8324798*	105,00
DC180-03-03.700A1-WJ30EZ	WJ30EZ	1	●	D30	8324799*	105,00
DC180-03-03.800A1-WJ30EZ	WJ30EZ	1	●	D30	8324800*	105,00
DC180-03-03.900A1-WJ30EZ	WJ30EZ	1	●	D30	8324801*	105,00
DC180-03-03.969A1-WJ30EZ	WJ30EZ	1	●	D30	8324802*	105,00
DC180-03-04.000A1-WJ30EZ	WJ30EZ	1	●	D30	8324803*	105,00
DC180-03-04.100A1-WJ30EZ	WJ30EZ	1	●	D30	8324804*	105,00
DC180-03-04.200A1-WJ30EZ	WJ30EZ	1	●	D30	8324805*	105,00
DC180-03-04.300A1-WJ30EZ	WJ30EZ	1	●	D30	8324806*	105,00
DC180-03-04.366A1-WJ30EZ	WJ30EZ	1	●	D30	8324807*	105,00
DC180-03-04.400A1-WJ30EZ	WJ30EZ	1	●	D30	8324808*	105,00
DC180-03-04.500A1-WJ30EZ	WJ30EZ	1	●	D30	8324809*	105,00
DC180-03-04.600A1-WJ30EZ	WJ30EZ	1	●	D30	8324810*	105,00
DC180-03-04.650A1-WJ30EZ	WJ30EZ	1	●	D30	8324811*	105,00
DC180-03-04.700A1-WJ30EZ	WJ30EZ	1	●	D30	8324812*	105,00
DC180-03-04.763A1-WJ30EZ	WJ30EZ	1	●	D30	8324813*	105,00
DC180-03-04.800A1-WJ30EZ	WJ30EZ	1	●	D30	8324814*	105,00
DC180-03-04.900A1-WJ30EZ	WJ30EZ	1	●	D30	8324815*	105,00
DC180-03-05.000A1-WJ30EZ	WJ30EZ	1	●	D30	8324816*	105,00
DC180-03-05.100A1-WJ30EZ	WJ30EZ	1	●	D30	8324817*	105,00
DC180-03-05.159A1-WJ30EZ	WJ30EZ	1	●	D30	8324818*	105,00
DC180-03-05.200A1-WJ30EZ	WJ30EZ	1	●	D30	8324819*	105,00
DC180-03-05.300A1-WJ30EZ	WJ30EZ	1	●	D30	8324820*	105,00
DC180-03-05.400A1-WJ30EZ	WJ30EZ	1	●	D30	8324821*	105,00
DC180-03-05.500A1-WJ30EZ	WJ30EZ	1	●	D30	8324822*	105,00
DC180-03-05.550A1-WJ30EZ	WJ30EZ	1	●	D30	8324823*	105,00
DC180-03-05.556A1-WJ30EZ	WJ30EZ	1	●	D30	8324824*	105,00
DC180-03-05.600A1-WJ30EZ	WJ30EZ	1	●	D30	8324825*	105,00
DC180-03-05.700A1-WJ30EZ	WJ30EZ	1	●	D30	8324826*	105,00
DC180-03-05.800A1-WJ30EZ	WJ30EZ	1	●	D30	8324827*	105,00
DC180-03-05.900A1-WJ30EZ	WJ30EZ	1	●	D30	8324828*	105,00
DC180-03-05.953A1-WJ30EZ	WJ30EZ	1	●	D30	8324829*	105,00
DC180-03-06.000A1-WJ30EZ	WJ30EZ	1	●	D30	8324830*	105,00
DC180-03-06.100A1-WJ30EZ	WJ30EZ	1	●	D30	8324831*	126,00
DC180-03-06.200A1-WJ30EZ	WJ30EZ	1	●	D30	8324832*	126,00
DC180-03-06.300A1-WJ30EZ	WJ30EZ	1	●	D30	8324833*	126,00
DC180-03-06.350A1-WJ30EZ	WJ30EZ	1	●	D30	8324834*	126,00
DC180-03-06.400A1-WJ30EZ	WJ30EZ	1	●	D30	8324835*	126,00
DC180-03-06.500A1-WJ30EZ	WJ30EZ	1	●	D30	8324836*	126,00
DC180-03-06.600A1-WJ30EZ	WJ30EZ	1	●	D30	8324837*	126,00
DC180-03-06.700A1-WJ30EZ	WJ30EZ	1	●	D30	8324838*	126,00
DC180-03-06.747A1-WJ30EZ	WJ30EZ	1	●	D30	8324839*	126,00
DC180-03-06.800A1-WJ30EZ	WJ30EZ	1	●	D30	8324840*	126,00
DC180-03-06.900A1-WJ30EZ	WJ30EZ	1	●	D30	8324841*	126,00
DC180-03-07.000A1-WJ30EZ	WJ30EZ	1	●	D30	8324842*	126,00
DC180-03-07.100A1-WJ30EZ	WJ30EZ	1	●	D30	8324843*	126,00
DC180-03-07.144A1-WJ30EZ	WJ30EZ	1	●	D30	8324844*	126,00
DC180-03-07.200A1-WJ30EZ	WJ30EZ	1	●	D30	8324845*	126,00
DC180-03-07.300A1-WJ30EZ	WJ30EZ	1	●	D30	8324846*	126,00
DC180-03-07.400A1-WJ30EZ	WJ30EZ	1	●	D30	8324847*	126,00

Bezeichnung / Designation	Sorte / Grade	VE / US		Disc. Gr.	Article No.	EURO Stück / piece
DC180-03-07.500A1-WJ30EZ	WJ30EZ	1	●	D30	8324848*	126,00
DC180-03-07.541A1-WJ30EZ	WJ30EZ	1	●	D30	8324849*	126,00
DC180-03-07.800A1-WJ30EZ	WJ30EZ	1	●	D30	8324850*	126,00
DC180-03-07.900A1-WJ30EZ	WJ30EZ	1	●	D30	8324851*	126,00
DC180-03-07.938A1-WJ30EZ	WJ30EZ	1	●	D30	8324852*	126,00
DC180-03-08.000A1-WJ30EZ	WJ30EZ	1	●	D30	8324853*	126,00
DC180-03-08.100A1-WJ30EZ	WJ30EZ	1	●	D30	8324854*	147,00
DC180-03-08.200A1-WJ30EZ	WJ30EZ	1	●	D30	8324855*	147,00
DC180-03-08.300A1-WJ30EZ	WJ30EZ	1	●	D30	8324856*	147,00
DC180-03-08.334A1-WJ30EZ	WJ30EZ	1	●	D30	8324857*	147,00
DC180-03-08.400A1-WJ30EZ	WJ30EZ	1	●	D30	8324858*	147,00
DC180-03-08.500A1-WJ30EZ	WJ30EZ	1	●	D30	8324859*	147,00
DC180-03-08.600A1-WJ30EZ	WJ30EZ	1	●	D30	8324860*	147,00
DC180-03-08.700A1-WJ30EZ	WJ30EZ	1	●	D30	8324861*	147,00
DC180-03-08.731A1-WJ30EZ	WJ30EZ	1	●	D30	8324862*	147,00
DC180-03-08.800A1-WJ30EZ	WJ30EZ	1	●	D30	8324863*	147,00
DC180-03-09.000A1-WJ30EZ	WJ30EZ	1	●	D30	8324864*	147,00
DC180-03-09.128A1-WJ30EZ	WJ30EZ	1	●	D30	8324865*	147,00
DC180-03-09.200A1-WJ30EZ	WJ30EZ	1	●	D30	8324866*	147,00
DC180-03-09.300A1-WJ30EZ	WJ30EZ	1	●	D30	8324867*	147,00
DC180-03-09.500A1-WJ30EZ	WJ30EZ	1	●	D30	8324868*	147,00
DC180-03-09.525A1-WJ30EZ	WJ30EZ	1	●	D30	8324869*	147,00
DC180-03-09.600A1-WJ30EZ	WJ30EZ	1	●	D30	8324870*	147,00
DC180-03-09.700A1-WJ30EZ	WJ30EZ	1	●	D30	8324871*	147,00
DC180-03-09.800A1-WJ30EZ	WJ30EZ	1	●	D30	8324872*	147,00
DC180-03-09.922A1-WJ30EZ	WJ30EZ	1	●	D30	8324873*	147,00
DC180-03-10.000A1-WJ30EZ	WJ30EZ	1	●	D30	8324874*	147,00
DC180-03-10.100A1-WJ30EZ	WJ30EZ	1	●	D30	8324875*	200,00
DC180-03-10.200A1-WJ30EZ	WJ30EZ	1	●	D30	8324876*	200,00
DC180-03-10.300A1-WJ30EZ	WJ30EZ	1	●	D30	8324877*	200,00
DC180-03-10.319A1-WJ30EZ	WJ30EZ	1	●	D30	8324878*	200,00
DC180-03-10.400A1-WJ30EZ	WJ30EZ	1	●	D30	8324879*	200,00
DC180-03-10.500A1-WJ30EZ	WJ30EZ	1	●	D30	8324880*	200,00
DC180-03-10.716A1-WJ30EZ	WJ30EZ	1	●	D30	8324881*	200,00
DC180-03-10.800A1-WJ30EZ	WJ30EZ	1	●	D30	8324882*	200,00
DC180-03-11.000A1-WJ30EZ	WJ30EZ	1	●	D30	8324883*	200,00
DC180-03-11.100A1-WJ30EZ	WJ30EZ	1	●	D30	8324884*	200,00
DC180-03-11.113A1-WJ30EZ	WJ30EZ	1	●	D30	8324885*	200,00
DC180-03-11.200A1-WJ30EZ	WJ30EZ	1	●	D30	8324886*	200,00
DC180-03-11.500A1-WJ30EZ	WJ30EZ	1	●	D30	8324887*	200,00
DC180-03-11.509A1-WJ30EZ	WJ30EZ	1	●	D30	8324888*	200,00
DC180-03-11.700A1-WJ30EZ	WJ30EZ	1	●	D30	8324889*	200,00
DC180-03-11.800A1-WJ30EZ	WJ30EZ	1	●	D30	8324890*	200,00
DC180-03-11.906A1-WJ30EZ	WJ30EZ	1	●	D30	8324891*	200,00
DC180-03-12.000A1-WJ30EZ	WJ30EZ	1	●	D30	8324892*	200,00
DC180-03-12.100A1-WJ30EZ	WJ30EZ	1	●	D30	8324893*	273,00
DC180-03-12.200A1-WJ30EZ	WJ30EZ	1	●	D30	8324894*	273,00
DC180-03-12.300A1-WJ30EZ	WJ30EZ	1	●	D30	8324895*	273,00
DC180-03-12.303A1-WJ30EZ	WJ30EZ	1	●	D30	8324896*	273,00
DC180-03-12.500A1-WJ30EZ	WJ30EZ	1	●	D30	8324897*	273,00
DC180-03-12.600A1-WJ30EZ	WJ30EZ	1	●	D30	8324898*	273,00
DC180-03-12.700A1-WJ30EZ	WJ30EZ	1	●	D30	8324899*	273,00
DC180-03-13.000A1-WJ30EZ	WJ30EZ	1	●	D30	8324900*	273,00
DC180-03-13.300A1-WJ30EZ	WJ30EZ	1	●	D30	8324901*	273,00
DC180-03-13.494A1-WJ30EZ	WJ30EZ	1	●	D30	8324902*	273,00
DC180-03-13.500A1-WJ30EZ	WJ30EZ	1	●	D30	8324903*	273,00
DC180-03-14.000A1-WJ30EZ	WJ30EZ	1	●	D30	8324904*	273,00
DC180-03-14.288A1-WJ30EZ	WJ30EZ	1	●	D30	8324905*	357,00
DC180-03-14.500A1-WJ30EZ	WJ30EZ	1	●	D30	8324906*	357,00
DC180-03-15.000A1-WJ30EZ	WJ30EZ	1	●	D30	8324907*	357,00
DC180-03-15.500A1-WJ30EZ	WJ30EZ	1	●	D30	8324908*	357,00
DC180-03-15.875A1-WJ30EZ	WJ30EZ	1	●	D30	8324909*	357,00
DC180-03-16.000A1-WJ30EZ	WJ30EZ	1	●	D30	8324910*	357,00
DC180-03-16.500A1-WJ30EZ	WJ30EZ	1	●	D30	8324911*	452,00
DC180-03-17.000A1-WJ30EZ	WJ30EZ	1	●	D30	8324912*	452,00
DC180-03-17.500A1-WJ30EZ	WJ30EZ	1	●	D30	8324913*	452,00
DC180-03-18.000A1-WJ30EZ	WJ30EZ	1	●	D30	8324914*	452,00
DC180-03-19.050A1-WJ30EZ	WJ30EZ	1	●	D30	8324915*	547,00
DC180-03-20.000A1-WJ30EZ	WJ30EZ	1	●	D30	8324916*	547,00
DC180-05-03.000A1-WJ30EZ	WJ30EZ	1	●	D30	8324917*	131,00

Bezeichnung / Designation	Sorte / Grade	VE / US		Disc. Gr.	Article No.	EURO Stück / piece
DC180-05-03.100A1-WJ30EZ	WJ30EZ	1	●	D30	8324918*	131,00
DC180-05-03.175A1-WJ30EZ	WJ30EZ	1	●	D30	8324919*	131,00
DC180-05-03.200A1-WJ30EZ	WJ30EZ	1	●	D30	8324920*	131,00
DC180-05-03.250A1-WJ30EZ	WJ30EZ	1	●	D30	8324921*	131,00
DC180-05-03.300A1-WJ30EZ	WJ30EZ	1	●	D30	8324922*	131,00
DC180-05-03.400A1-WJ30EZ	WJ30EZ	1	●	D30	8324923*	131,00
DC180-05-03.500A1-WJ30EZ	WJ30EZ	1	●	D30	8324924*	131,00
DC180-05-03.572A1-WJ30EZ	WJ30EZ	1	●	D30	8324925*	131,00
DC180-05-03.600A1-WJ30EZ	WJ30EZ	1	●	D30	8324926*	131,00
DC180-05-03.700A1-WJ30EZ	WJ30EZ	1	●	D30	8324927*	131,00
DC180-05-03.800A1-WJ30EZ	WJ30EZ	1	●	D30	8324928*	131,00
DC180-05-03.900A1-WJ30EZ	WJ30EZ	1	●	D30	8324929*	131,00
DC180-05-03.969A1-WJ30EZ	WJ30EZ	1	●	D30	8324930*	131,00
DC180-05-04.000A1-WJ30EZ	WJ30EZ	1	●	D30	8324931*	131,00
DC180-05-04.100A1-WJ30EZ	WJ30EZ	1	●	D30	8324932*	131,00
DC180-05-04.200A1-WJ30EZ	WJ30EZ	1	●	D30	8324933*	131,00
DC180-05-04.300A1-WJ30EZ	WJ30EZ	1	●	D30	8324934*	131,00
DC180-05-04.366A1-WJ30EZ	WJ30EZ	1	●	D30	8324935*	131,00
DC180-05-04.400A1-WJ30EZ	WJ30EZ	1	●	D30	8324936*	131,00
DC180-05-04.500A1-WJ30EZ	WJ30EZ	1	●	D30	8324937*	131,00
DC180-05-04.600A1-WJ30EZ	WJ30EZ	1	●	D30	8324938*	131,00
DC180-05-04.650A1-WJ30EZ	WJ30EZ	1	●	D30	8324939*	131,00
DC180-05-04.700A1-WJ30EZ	WJ30EZ	1	●	D30	8324940*	131,00
DC180-05-04.763A1-WJ30EZ	WJ30EZ	1	●	D30	8324941*	131,00
DC180-05-04.800A1-WJ30EZ	WJ30EZ	1	●	D30	8324942*	131,00
DC180-05-04.900A1-WJ30EZ	WJ30EZ	1	●	D30	8324943*	131,00
DC180-05-05.000A1-WJ30EZ	WJ30EZ	1	●	D30	8324944*	131,00
DC180-05-05.100A1-WJ30EZ	WJ30EZ	1	●	D30	8324945*	131,00
DC180-05-05.159A1-WJ30EZ	WJ30EZ	1	●	D30	8324946*	131,00
DC180-05-05.200A1-WJ30EZ	WJ30EZ	1	●	D30	8324947*	131,00
DC180-05-05.300A1-WJ30EZ	WJ30EZ	1	●	D30	8324948*	131,00
DC180-05-05.400A1-WJ30EZ	WJ30EZ	1	●	D30	8324949*	131,00
DC180-05-05.500A1-WJ30EZ	WJ30EZ	1	●	D30	8324950*	131,00
DC180-05-05.550A1-WJ30EZ	WJ30EZ	1	●	D30	8324951*	131,00
DC180-05-05.556A1-WJ30EZ	WJ30EZ	1	●	D30	8324952*	131,00
DC180-05-05.600A1-WJ30EZ	WJ30EZ	1	●	D30	8324953*	131,00
DC180-05-05.700A1-WJ30EZ	WJ30EZ	1	●	D30	8324954*	131,00
DC180-05-05.800A1-WJ30EZ	WJ30EZ	1	●	D30	8324955*	131,00
DC180-05-05.900A1-WJ30EZ	WJ30EZ	1	●	D30	8324956*	131,00
DC180-05-05.953A1-WJ30EZ	WJ30EZ	1	●	D30	8324957*	131,00
DC180-05-06.000A1-WJ30EZ	WJ30EZ	1	●	D30	8324958*	131,00
DC180-05-06.100A1-WJ30EZ	WJ30EZ	1	●	D30	8324959*	158,00
DC180-05-06.200A1-WJ30EZ	WJ30EZ	1	●	D30	8324960*	158,00
DC180-05-06.300A1-WJ30EZ	WJ30EZ	1	●	D30	8324961*	158,00
DC180-05-06.350A1-WJ30EZ	WJ30EZ	1	●	D30	8324962*	158,00
DC180-05-06.400A1-WJ30EZ	WJ30EZ	1	●	D30	8324963*	158,00
DC180-05-06.500A1-WJ30EZ	WJ30EZ	1	●	D30	8324964*	158,00
DC180-05-06.600A1-WJ30EZ	WJ30EZ	1	●	D30	8324965*	158,00
DC180-05-06.700A1-WJ30EZ	WJ30EZ	1	●	D30	8324966*	158,00
DC180-05-06.747A1-WJ30EZ	WJ30EZ	1	●	D30	8324967*	158,00
DC180-05-06.800A1-WJ30EZ	WJ30EZ	1	●	D30	8324968*	158,00
DC180-05-06.900A1-WJ30EZ	WJ30EZ	1	●	D30	8324969*	158,00
DC180-05-07.000A1-WJ30EZ	WJ30EZ	1	●	D30	8324970*	158,00
DC180-05-07.100A1-WJ30EZ	WJ30EZ	1	●	D30	8324971*	158,00
DC180-05-07.144A1-WJ30EZ	WJ30EZ	1	●	D30	8324972*	158,00
DC180-05-07.200A1-WJ30EZ	WJ30EZ	1	●	D30	8324973*	158,00
DC180-05-07.300A1-WJ30EZ	WJ30EZ	1	●	D30	8324974*	158,00
DC180-05-07.400A1-WJ30EZ	WJ30EZ	1	●	D30	8324975*	158,00
DC180-05-07.500A1-WJ30EZ	WJ30EZ	1	●	D30	8324976*	158,00
DC180-05-07.541A1-WJ30EZ	WJ30EZ	1	●	D30	8324977*	158,00
DC180-05-07.800A1-WJ30EZ	WJ30EZ	1	●	D30	8324978*	158,00
DC180-05-07.900A1-WJ30EZ	WJ30EZ	1	●	D30	8324979*	158,00
DC180-05-07.938A1-WJ30EZ	WJ30EZ	1	●	D30	8324980*	158,00
DC180-05-08.000A1-WJ30EZ	WJ30EZ	1	●	D30	8324981*	158,00
DC180-05-08.100A1-WJ30EZ	WJ30EZ	1	●	D30	8324982*	184,00
DC180-05-08.200A1-WJ30EZ	WJ30EZ	1	●	D30	8324983*	184,00
DC180-05-08.300A1-WJ30EZ	WJ30EZ	1	●	D30	8324984*	184,00
DC180-05-08.334A1-WJ30EZ	WJ30EZ	1	●	D30	8324985*	184,00
DC180-05-08.400A1-WJ30EZ	WJ30EZ	1	●	D30	8324986*	184,00
DC180-05-08.500A1-WJ30EZ	WJ30EZ	1	●	D30	8324987*	184,00

Bezeichnung / Designation	Sorte / Grade	VE / US		Disc. Gr.	Article No.	EURO Stück / piece
DC180-05-08.600A1-WJ30EZ	WJ30EZ	1	●	D30	8324988*	184,00
DC180-05-08.700A1-WJ30EZ	WJ30EZ	1	●	D30	8324989*	184,00
DC180-05-08.731A1-WJ30EZ	WJ30EZ	1	●	D30	8324990*	184,00
DC180-05-08.750A1-WJ30EZ	WJ30EZ	1	●	D30	8324991*	184,00
DC180-05-08.800A1-WJ30EZ	WJ30EZ	1	●	D30	8324992*	184,00
DC180-05-09.000A1-WJ30EZ	WJ30EZ	1	●	D30	8324993*	184,00
DC180-05-09.128A1-WJ30EZ	WJ30EZ	1	●	D30	8324994*	184,00
DC180-05-09.200A1-WJ30EZ	WJ30EZ	1	●	D30	8324995*	184,00
DC180-05-09.300A1-WJ30EZ	WJ30EZ	1	●	D30	8324996*	184,00
DC180-05-09.500A1-WJ30EZ	WJ30EZ	1	●	D30	8324997*	184,00
DC180-05-09.525A1-WJ30EZ	WJ30EZ	1	●	D30	8324998*	184,00
DC180-05-09.600A1-WJ30EZ	WJ30EZ	1	●	D30	8324999*	184,00
DC180-05-09.700A1-WJ30EZ	WJ30EZ	1	●	D30	8325000*	184,00
DC180-05-09.800A1-WJ30EZ	WJ30EZ	1	●	D30	8325001*	184,00
DC180-05-09.900A1-WJ30EZ	WJ30EZ	1	●	D30	8325002*	184,00
DC180-05-09.922A1-WJ30EZ	WJ30EZ	1	●	D30	8325003*	184,00
DC180-05-10.000A1-WJ30EZ	WJ30EZ	1	●	D30	8325004*	184,00
DC180-05-10.100A1-WJ30EZ	WJ30EZ	1	●	D30	8325005*	250,00
DC180-05-10.200A1-WJ30EZ	WJ30EZ	1	●	D30	8325006*	250,00
DC180-05-10.300A1-WJ30EZ	WJ30EZ	1	●	D30	8325007*	250,00
DC180-05-10.319A1-WJ30EZ	WJ30EZ	1	●	D30	8325008*	250,00
DC180-05-10.400A1-WJ30EZ	WJ30EZ	1	●	D30	8325009*	250,00
DC180-05-10.500A1-WJ30EZ	WJ30EZ	1	●	D30	8325010*	250,00
DC180-05-10.716A1-WJ30EZ	WJ30EZ	1	●	D30	8325011*	250,00
DC180-05-10.800A1-WJ30EZ	WJ30EZ	1	●	D30	8325012*	250,00
DC180-05-11.000A1-WJ30EZ	WJ30EZ	1	●	D30	8325013*	250,00
DC180-05-11.100A1-WJ30EZ	WJ30EZ	1	●	D30	8325014*	250,00
DC180-05-11.113A1-WJ30EZ	WJ30EZ	1	●	D30	8325015*	250,00
DC180-05-11.200A1-WJ30EZ	WJ30EZ	1	●	D30	8325016*	250,00
DC180-05-11.300A1-WJ30EZ	WJ30EZ	1	●	D30	8325017*	250,00
DC180-05-11.400A1-WJ30EZ	WJ30EZ	1	●	D30	8325018*	250,00
DC180-05-11.500A1-WJ30EZ	WJ30EZ	1	●	D30	8325019*	250,00
DC180-05-11.509A1-WJ30EZ	WJ30EZ	1	●	D30	8325020*	250,00
DC180-05-11.700A1-WJ30EZ	WJ30EZ	1	●	D30	8325021*	250,00
DC180-05-11.800A1-WJ30EZ	WJ30EZ	1	●	D30	8325022*	250,00
DC180-05-11.906A1-WJ30EZ	WJ30EZ	1	●	D30	8325023*	250,00
DC180-05-12.000A1-WJ30EZ	WJ30EZ	1	●	D30	8325024*	250,00
DC180-05-12.100A1-WJ30EZ	WJ30EZ	1	●	D30	8325025*	342,00
DC180-05-12.200A1-WJ30EZ	WJ30EZ	1	●	D30	8325026*	342,00
DC180-05-12.300A1-WJ30EZ	WJ30EZ	1	●	D30	8325027*	342,00
DC180-05-12.303A1-WJ30EZ	WJ30EZ	1	●	D30	8325028*	342,00
DC180-05-12.500A1-WJ30EZ	WJ30EZ	1	●	D30	8325029*	342,00
DC180-05-12.600A1-WJ30EZ	WJ30EZ	1	●	D30	8325030*	342,00
DC180-05-12.700A1-WJ30EZ	WJ30EZ	1	●	D30	8325031*	342,00
DC180-05-13.000A1-WJ30EZ	WJ30EZ	1	●	D30	8325032*	342,00
DC180-05-13.100A1-WJ30EZ	WJ30EZ	1	●	D30	8325033*	342,00
DC180-05-13.300A1-WJ30EZ	WJ30EZ	1	●	D30	8325034*	342,00
DC180-05-13.494A1-WJ30EZ	WJ30EZ	1	●	D30	8325035*	342,00
DC180-05-13.500A1-WJ30EZ	WJ30EZ	1	●	D30	8325036*	342,00
DC180-05-14.000A1-WJ30EZ	WJ30EZ	1	●	D30	8325037*	342,00
DC180-05-14.288A1-WJ30EZ	WJ30EZ	1	●	D30	8325038*	447,00
DC180-05-14.500A1-WJ30EZ	WJ30EZ	1	●	D30	8325039*	447,00
DC180-05-15.000A1-WJ30EZ	WJ30EZ	1	●	D30	8325040*	447,00
DC180-05-15.100A1-WJ30EZ	WJ30EZ	1	●	D30	8325041*	447,00
DC180-05-15.300A1-WJ30EZ	WJ30EZ	1	●	D30	8325042*	447,00
DC180-05-15.500A1-WJ30EZ	WJ30EZ	1	●	D30	8325043*	447,00
DC180-05-15.875A1-WJ30EZ	WJ30EZ	1	●	D30	8325044*	447,00
DC180-05-16.000A1-WJ30EZ	WJ30EZ	1	●	D30	8325045*	447,00
DC180-05-16.500A1-WJ30EZ	WJ30EZ	1	●	D30	8325046*	565,00
DC180-05-17.000A1-WJ30EZ	WJ30EZ	1	●	D30	8325047*	565,00
DC180-05-17.500A1-WJ30EZ	WJ30EZ	1	●	D30	8325048*	565,00
DC180-05-18.000A1-WJ30EZ	WJ30EZ	1	●	D30	8325049*	565,00
DC180-05-18.500A1-WJ30EZ	WJ30EZ	1	●	D30	8325050*	683,00
DC180-05-19.000A1-WJ30EZ	WJ30EZ	1	●	D30	8325051*	683,00
DC180-05-19.050A1-WJ30EZ	WJ30EZ	1	●	D30	8325052*	683,00
DC180-05-20.000A1-WJ30EZ	WJ30EZ	1	●	D30	8325053*	683,00
DC180-08-03.000A1-WJ30EY	WJ30EY	1	●	D31	8325054*	221,00
DC180-08-03.100A1-WJ30EY	WJ30EY	1	●	D31	8325055*	221,00
DC180-08-03.175A1-WJ30EY	WJ30EY	1	●	D31	8325056*	221,00
DC180-08-03.200A1-WJ30EY	WJ30EY	1	●	D31	8325057*	221,00

Bezeichnung / Designation	Sorte / Grade	VE / US		Disc. Gr.	Article No.	EURO Stück / piece
DC180-08-03.300A1-WJ30EY	WJ30EY	1	●	D31	8325058*	221,00
DC180-08-03.400A1-WJ30EY	WJ30EY	1	●	D31	8325059*	221,00
DC180-08-03.500A1-WJ30EY	WJ30EY	1	●	D31	8325080*	221,00
DC180-08-03.572A1-WJ30EY	WJ30EY	1	●	D31	8325081*	221,00
DC180-08-03.600A1-WJ30EY	WJ30EY	1	●	D31	8325082*	221,00
DC180-08-03.700A1-WJ30EY	WJ30EY	1	●	D31	8325083*	221,00
DC180-08-03.800A1-WJ30EY	WJ30EY	1	●	D31	8325084*	221,00
DC180-08-03.900A1-WJ30EY	WJ30EY	1	●	D31	8325085*	221,00
DC180-08-03.969A1-WJ30EY	WJ30EY	1	●	D31	8325086*	221,00
DC180-08-04.000A1-WJ30EY	WJ30EY	1	●	D31	8325087*	221,00
DC180-08-04.100A1-WJ30EY	WJ30EY	1	●	D31	8325088*	221,00
DC180-08-04.200A1-WJ30EY	WJ30EY	1	●	D31	8325089*	221,00
DC180-08-04.300A1-WJ30EY	WJ30EY	1	●	D31	8325090*	221,00
DC180-08-04.366A1-WJ30EY	WJ30EY	1	●	D31	8325091*	221,00
DC180-08-04.400A1-WJ30EY	WJ30EY	1	●	D31	8325092*	221,00
DC180-08-04.500A1-WJ30EY	WJ30EY	1	●	D31	8325093*	221,00
DC180-08-04.600A1-WJ30EY	WJ30EY	1	●	D31	8325094*	221,00
DC180-08-04.700A1-WJ30EY	WJ30EY	1	●	D31	8325095*	221,00
DC180-08-04.763A1-WJ30EY	WJ30EY	1	●	D31	8325096*	221,00
DC180-08-04.800A1-WJ30EY	WJ30EY	1	●	D31	8325097*	221,00
DC180-08-04.900A1-WJ30EY	WJ30EY	1	●	D31	8325098*	221,00
DC180-08-05.000A1-WJ30EY	WJ30EY	1	●	D31	8325099*	221,00
DC180-08-05.100A1-WJ30EY	WJ30EY	1	●	D31	8325100*	221,00
DC180-08-05.159A1-WJ30EY	WJ30EY	1	●	D31	8325101*	221,00
DC180-08-05.200A1-WJ30EY	WJ30EY	1	●	D31	8325102*	221,00
DC180-08-05.300A1-WJ30EY	WJ30EY	1	●	D31	8325103*	221,00
DC180-08-05.400A1-WJ30EY	WJ30EY	1	●	D31	8325104*	221,00
DC180-08-05.500A1-WJ30EY	WJ30EY	1	●	D31	8325105*	221,00
DC180-08-05.556A1-WJ30EY	WJ30EY	1	●	D31	8325106*	221,00
DC180-08-05.600A1-WJ30EY	WJ30EY	1	●	D31	8325107*	221,00
DC180-08-05.700A1-WJ30EY	WJ30EY	1	●	D31	8325108*	221,00
DC180-08-05.800A1-WJ30EY	WJ30EY	1	●	D31	8325109*	221,00
DC180-08-05.900A1-WJ30EY	WJ30EY	1	●	D31	8325110*	221,00
DC180-08-05.953A1-WJ30EY	WJ30EY	1	●	D31	8325111*	221,00
DC180-08-06.000A1-WJ30EY	WJ30EY	1	●	D31	8325112*	221,00
DC180-08-06.100A1-WJ30EY	WJ30EY	1	●	D31	8325113*	265,00
DC180-08-06.200A1-WJ30EY	WJ30EY	1	●	D31	8325114*	265,00
DC180-08-06.300A1-WJ30EY	WJ30EY	1	●	D31	8325115*	265,00
DC180-08-06.350A1-WJ30EY	WJ30EY	1	●	D31	8325116*	265,00
DC180-08-06.400A1-WJ30EY	WJ30EY	1	●	D31	8325117*	265,00
DC180-08-06.500A1-WJ30EY	WJ30EY	1	●	D31	8325118*	265,00
DC180-08-06.600A1-WJ30EY	WJ30EY	1	●	D31	8325119*	265,00
DC180-08-06.700A1-WJ30EY	WJ30EY	1	●	D31	8325120*	265,00
DC180-08-06.747A1-WJ30EY	WJ30EY	1	●	D31	8325121*	265,00
DC180-08-06.800A1-WJ30EY	WJ30EY	1	●	D31	8325122*	265,00
DC180-08-06.900A1-WJ30EY	WJ30EY	1	●	D31	8325123*	265,00
DC180-08-07.000A1-WJ30EY	WJ30EY	1	●	D31	8325124*	265,00
DC180-08-07.100A1-WJ30EY	WJ30EY	1	●	D31	8325125*	265,00
DC180-08-07.144A1-WJ30EY	WJ30EY	1	●	D31	8325126*	265,00
DC180-08-07.200A1-WJ30EY	WJ30EY	1	●	D31	8325127*	265,00
DC180-08-07.300A1-WJ30EY	WJ30EY	1	●	D31	8325128*	265,00
DC180-08-07.400A1-WJ30EY	WJ30EY	1	●	D31	8325129*	265,00
DC180-08-07.500A1-WJ30EY	WJ30EY	1	●	D31	8325130*	265,00
DC180-08-07.541A1-WJ30EY	WJ30EY	1	●	D31	8325131*	265,00
DC180-08-07.600A1-WJ30EY	WJ30EY	1	●	D31	8325132*	265,00
DC180-08-07.700A1-WJ30EY	WJ30EY	1	●	D31	8325133*	265,00
DC180-08-07.800A1-WJ30EY	WJ30EY	1	●	D31	8325134*	265,00
DC180-08-07.900A1-WJ30EY	WJ30EY	1	●	D31	8325135*	265,00
DC180-08-07.938A1-WJ30EY	WJ30EY	1	●	D31	8325136*	265,00
DC180-08-08.000A1-WJ30EY	WJ30EY	1	●	D31	8325137*	265,00
DC180-08-08.100A1-WJ30EY	WJ30EY	1	●	D31	8325138*	310,00
DC180-08-08.200A1-WJ30EY	WJ30EY	1	●	D31	8325139*	310,00
DC180-08-08.300A1-WJ30EY	WJ30EY	1	●	D31	8325140*	310,00
DC180-08-08.334A1-WJ30EY	WJ30EY	1	●	D31	8325141*	310,00
DC180-08-08.400A1-WJ30EY	WJ30EY	1	●	D31	8325142*	310,00
DC180-08-08.500A1-WJ30EY	WJ30EY	1	●	D31	8325143*	310,00
DC180-08-08.600A1-WJ30EY	WJ30EY	1	●	D31	8325144*	310,00
DC180-08-08.700A1-WJ30EY	WJ30EY	1	●	D31	8325145*	310,00
DC180-08-08.731A1-WJ30EY	WJ30EY	1	●	D31	8325146*	310,00
DC180-08-08.800A1-WJ30EY	WJ30EY	1	●	D31	8325147*	310,00

Bezeichnung / Designation	Sorte / Grade	VE / US		Disc. Gr.	Article No.	EURO Stück / piece
DC180-08-08.900A1-WJ30EY	WJ30EY	1	●	D31	8325148*	310,00
DC180-08-09.000A1-WJ30EY	WJ30EY	1	●	D31	8325149*	310,00
DC180-08-09.100A1-WJ30EY	WJ30EY	1	●	D31	8325150*	310,00
DC180-08-09.128A1-WJ30EY	WJ30EY	1	●	D31	8325151*	310,00
DC180-08-09.200A1-WJ30EY	WJ30EY	1	●	D31	8325152*	310,00
DC180-08-09.300A1-WJ30EY	WJ30EY	1	●	D31	8325153*	310,00
DC180-08-09.400A1-WJ30EY	WJ30EY	1	●	D31	8325154*	310,00
DC180-08-09.500A1-WJ30EY	WJ30EY	1	●	D31	8325155*	310,00
DC180-08-09.525A1-WJ30EY	WJ30EY	1	●	D31	8325156*	310,00
DC180-08-09.600A1-WJ30EY	WJ30EY	1	●	D31	8325157*	310,00
DC180-08-09.700A1-WJ30EY	WJ30EY	1	●	D31	8325158*	310,00
DC180-08-09.800A1-WJ30EY	WJ30EY	1	●	D31	8325159*	310,00
DC180-08-09.900A1-WJ30EY	WJ30EY	1	●	D31	8325160*	310,00
DC180-08-09.922A1-WJ30EY	WJ30EY	1	●	D31	8325161*	310,00
DC180-08-10.000A1-WJ30EY	WJ30EY	1	●	D31	8325162*	310,00
DC180-08-10.100A1-WJ30EY	WJ30EY	1	●	D31	8325163*	420,00
DC180-08-10.200A1-WJ30EY	WJ30EY	1	●	D31	8325164*	420,00
DC180-08-10.300A1-WJ30EY	WJ30EY	1	●	D31	8325165*	420,00
DC180-08-10.319A1-WJ30EY	WJ30EY	1	●	D31	8325166*	420,00
DC180-08-10.400A1-WJ30EY	WJ30EY	1	●	D31	8325167*	420,00
DC180-08-10.500A1-WJ30EY	WJ30EY	1	●	D31	8325168*	420,00
DC180-08-10.600A1-WJ30EY	WJ30EY	1	●	D31	8325169*	420,00
DC180-08-10.700A1-WJ30EY	WJ30EY	1	●	D31	8325170*	420,00
DC180-08-10.716A1-WJ30EY	WJ30EY	1	●	D31	8325171*	420,00
DC180-08-10.800A1-WJ30EY	WJ30EY	1	●	D31	8325172*	420,00
DC180-08-10.900A1-WJ30EY	WJ30EY	1	●	D31	8325173*	420,00
DC180-08-11.000A1-WJ30EY	WJ30EY	1	●	D31	8325174*	420,00
DC180-08-11.100A1-WJ30EY	WJ30EY	1	●	D31	8325175*	420,00
DC180-08-11.113A1-WJ30EY	WJ30EY	1	●	D31	8325176*	420,00
DC180-08-11.200A1-WJ30EY	WJ30EY	1	●	D31	8325177*	420,00
DC180-08-11.300A1-WJ30EY	WJ30EY	1	●	D31	8325178*	420,00
DC180-08-11.400A1-WJ30EY	WJ30EY	1	●	D31	8325179*	420,00
DC180-08-11.500A1-WJ30EY	WJ30EY	1	●	D31	8325180*	420,00
DC180-08-11.509A1-WJ30EY	WJ30EY	1	●	D31	8325181*	420,00
DC180-08-11.600A1-WJ30EY	WJ30EY	1	●	D31	8325182*	420,00
DC180-08-11.700A1-WJ30EY	WJ30EY	1	●	D31	8325183*	420,00
DC180-08-11.800A1-WJ30EY	WJ30EY	1	●	D31	8325184*	420,00
DC180-08-11.900A1-WJ30EY	WJ30EY	1	●	D31	8325185*	420,00
DC180-08-11.906A1-WJ30EY	WJ30EY	1	●	D31	8325186*	420,00
DC180-08-12.000A1-WJ30EY	WJ30EY	1	●	D31	8325187*	420,00
DC180-08-12.303A1-WJ30EY	WJ30EY	1	●	D31	8325188*	575,00
DC180-08-12.500A1-WJ30EY	WJ30EY	1	●	D31	8325189*	575,00
DC180-08-12.700A1-WJ30EY	WJ30EY	1	●	D31	8325190*	575,00
DC180-08-13.000A1-WJ30EY	WJ30EY	1	●	D31	8325191*	575,00
DC180-08-13.494A1-WJ30EY	WJ30EY	1	●	D31	8325192*	575,00
DC180-08-13.500A1-WJ30EY	WJ30EY	1	●	D31	8325193*	575,00
DC180-08-14.000A1-WJ30EY	WJ30EY	1	●	D31	8325194*	575,00
DC180-08-14.288A1-WJ30EY	WJ30EY	1	●	D31	8325195*	752,00
DC180-08-14.500A1-WJ30EY	WJ30EY	1	●	D31	8325196*	752,00
DC180-08-15.000A1-WJ30EY	WJ30EY	1	●	D31	8325197*	752,00
DC180-08-15.500A1-WJ30EY	WJ30EY	1	●	D31	8325198*	752,00
DC180-08-15.875A1-WJ30EY	WJ30EY	1	●	D31	8325199*	752,00
DC180-08-16.000A1-WJ30EY	WJ30EY	1	●	D31	8325200*	752,00
DC180-08-16.500A1-WJ30EY	WJ30EY	1	●	D31	8325201*	951,00
DC180-08-17.000A1-WJ30EY	WJ30EY	1	●	D31	8325202*	951,00
DC180-08-17.500A1-WJ30EY	WJ30EY	1	●	D31	8325203*	951,00
DC180-08-18.000A1-WJ30EY	WJ30EY	1	●	D31	8325204*	951,00
DC180-08-18.500A1-WJ30EY	WJ30EY	1	●	D31	8325205*	1.150,00
DC180-08-19.000A1-WJ30EY	WJ30EY	1	●	D31	8325206*	1.150,00
DC180-08-19.050A1-WJ30EY	WJ30EY	1	●	D31	8325207*	1.150,00
DC180-08-19.500A1-WJ30EY	WJ30EY	1	●	D31	8325208*	1.150,00
DC180-08-20.000A1-WJ30EY	WJ30EY	1	●	D31	8325209*	1.150,00
DC183-05-03.000A1-WJ30EZ	WJ30EZ	1	●	D30	8374460*	137,00
DC183-05-03.175A1-WJ30EZ	WJ30EZ	1	●	D30	8374461*	137,00
DC183-05-03.300A1-WJ30EZ	WJ30EZ	1	●	D30	8374462*	137,00
DC183-05-03.500A1-WJ30EZ	WJ30EZ	1	●	D30	8374463*	137,00
DC183-05-03.700A1-WJ30EZ	WJ30EZ	1	●	D30	8374464*	137,00
DC183-05-03.900A1-WJ30EZ	WJ30EZ	1	●	D30	8374465*	137,00
DC183-05-04.000A1-WJ30EZ	WJ30EZ	1	●	D30	8374466*	137,00
DC183-05-04.100A1-WJ30EZ	WJ30EZ	1	●	D30	8374467*	137,00

Bezeichnung / Designation	Sorte / Grade	VE / US		Disc. Gr.	Article No.	EURO Stück / piece
DC183-05-04.200A1-WJ30EZ	WJ30EZ	1	●	D30	8374468*	137,00
DC183-05-04.300A1-WJ30EZ	WJ30EZ	1	●	D30	8374469*	137,00
DC183-05-04.366A1-WJ30EZ	WJ30EZ	1	●	D30	8374470*	137,00
DC183-05-04.500A1-WJ30EZ	WJ30EZ	1	●	D30	8374471*	137,00
DC183-05-04.763A1-WJ30EZ	WJ30EZ	1	●	D30	8374472*	137,00
DC183-05-04.800A1-WJ30EZ	WJ30EZ	1	●	D30	8374473*	137,00
DC183-05-05.000A1-WJ30EZ	WJ30EZ	1	●	D30	8374474*	137,00
DC183-05-05.100A1-WJ30EZ	WJ30EZ	1	●	D30	8374475*	137,00
DC183-05-05.200A1-WJ30EZ	WJ30EZ	1	●	D30	8374476*	137,00
DC183-05-05.500A1-WJ30EZ	WJ30EZ	1	●	D30	8374477*	137,00
DC183-05-05.550A1-WJ30EZ	WJ30EZ	1	●	D30	8374478*	137,00
DC183-05-05.556A1-WJ30EZ	WJ30EZ	1	●	D30	8374479*	137,00
DC183-05-05.800A1-WJ30EZ	WJ30EZ	1	●	D30	8374480*	137,00
DC183-05-06.000A1-WJ30EZ	WJ30EZ	1	●	D30	8374481*	137,00
DC183-05-06.100A1-WJ30EZ	WJ30EZ	1	●	D30	8374482*	164,00
DC183-05-06.200A1-WJ30EZ	WJ30EZ	1	●	D30	8374483*	164,00
DC183-05-06.350A1-WJ30EZ	WJ30EZ	1	●	D30	8374484*	164,00
DC183-05-06.500A1-WJ30EZ	WJ30EZ	1	●	D30	8374485*	164,00
DC183-05-06.700A1-WJ30EZ	WJ30EZ	1	●	D30	8374486*	164,00
DC183-05-06.747A1-WJ30EZ	WJ30EZ	1	●	D30	8374487*	164,00
DC183-05-06.800A1-WJ30EZ	WJ30EZ	1	●	D30	8374488*	164,00
DC183-05-07.000A1-WJ30EZ	WJ30EZ	1	●	D30	8374489*	164,00
DC183-05-07.144A1-WJ30EZ	WJ30EZ	1	●	D30	8374490*	164,00
DC183-05-07.400A1-WJ30EZ	WJ30EZ	1	●	D30	8374491*	164,00
DC183-05-07.500A1-WJ30EZ	WJ30EZ	1	●	D30	8374492*	164,00
DC183-05-07.541A1-WJ30EZ	WJ30EZ	1	●	D30	8374493*	164,00
DC183-05-07.800A1-WJ30EZ	WJ30EZ	1	●	D30	8374494*	164,00
DC183-05-07.938A1-WJ30EZ	WJ30EZ	1	●	D30	8374495*	164,00
DC183-05-08.000A1-WJ30EZ	WJ30EZ	1	●	D30	8374496*	164,00
DC183-05-08.100A1-WJ30EZ	WJ30EZ	1	●	D30	8374497*	191,00
DC183-05-08.500A1-WJ30EZ	WJ30EZ	1	●	D30	8374498*	191,00
DC183-05-08.600A1-WJ30EZ	WJ30EZ	1	●	D30	8374499*	191,00
DC183-05-08.700A1-WJ30EZ	WJ30EZ	1	●	D30	8374500*	191,00
DC183-05-08.731A1-WJ30EZ	WJ30EZ	1	●	D30	8374501*	191,00
DC183-05-08.800A1-WJ30EZ	WJ30EZ	1	●	D30	8374502*	191,00
DC183-05-09.000A1-WJ30EZ	WJ30EZ	1	●	D30	8374503*	191,00
DC183-05-09.100A1-WJ30EZ	WJ30EZ	1	●	D30	8374504*	191,00
DC183-05-09.128A1-WJ30EZ	WJ30EZ	1	●	D30	8374505*	191,00
DC183-05-09.300A1-WJ30EZ	WJ30EZ	1	●	D30	8374506*	191,00
DC183-05-09.500A1-WJ30EZ	WJ30EZ	1	●	D30	8374507*	191,00
DC183-05-09.525A1-WJ30EZ	WJ30EZ	1	●	D30	8374508*	191,00
DC183-05-09.800A1-WJ30EZ	WJ30EZ	1	●	D30	8374509*	191,00
DC183-05-09.922A1-WJ30EZ	WJ30EZ	1	●	D30	8374510*	191,00
DC183-05-10.000A1-WJ30EZ	WJ30EZ	1	●	D30	8374511*	191,00
DC183-05-10.100A1-WJ30EZ	WJ30EZ	1	●	D30	8374512*	260,00
DC183-05-10.200A1-WJ30EZ	WJ30EZ	1	●	D30	8374513*	260,00
DC183-05-10.300A1-WJ30EZ	WJ30EZ	1	●	D30	8374514*	260,00
DC183-05-10.319A1-WJ30EZ	WJ30EZ	1	●	D30	8374515*	260,00
DC183-05-10.500A1-WJ30EZ	WJ30EZ	1	●	D30	8374516*	260,00
DC183-05-10.716A1-WJ30EZ	WJ30EZ	1	●	D30	8374517*	260,00
DC183-05-10.800A1-WJ30EZ	WJ30EZ	1	●	D30	8374518*	260,00
DC183-05-11.000A1-WJ30EZ	WJ30EZ	1	●	D30	8374519*	260,00
DC183-05-11.100A1-WJ30EZ	WJ30EZ	1	●	D30	8374520*	260,00
DC183-05-11.113A1-WJ30EZ	WJ30EZ	1	●	D30	8374521*	260,00
DC183-05-11.200A1-WJ30EZ	WJ30EZ	1	●	D30	8374522*	260,00
DC183-05-11.500A1-WJ30EZ	WJ30EZ	1	●	D30	8374523*	260,00
DC183-05-11.509A1-WJ30EZ	WJ30EZ	1	●	D30	8374524*	260,00
DC183-05-11.800A1-WJ30EZ	WJ30EZ	1	●	D30	8374525*	260,00
DC183-05-11.906A1-WJ30EZ	WJ30EZ	1	●	D30	8374526*	260,00
DC183-05-12.000A1-WJ30EZ	WJ30EZ	1	●	D30	8374527*	260,00
DC183-05-12.100A1-WJ30EZ	WJ30EZ	1	●	D30	8374528*	355,00
DC183-05-12.303A1-WJ30EZ	WJ30EZ	1	●	D30	8374529*	355,00
DC183-05-12.500A1-WJ30EZ	WJ30EZ	1	●	D30	8374530*	355,00
DC183-05-12.700A1-WJ30EZ	WJ30EZ	1	●	D30	8374531*	355,00
DC183-05-13.000A1-WJ30EZ	WJ30EZ	1	●	D30	8374532*	355,00
DC183-05-13.100A1-WJ30EZ	WJ30EZ	1	●	D30	8374533*	355,00
DC183-05-13.494A1-WJ30EZ	WJ30EZ	1	●	D30	8374534*	355,00
DC183-05-13.500A1-WJ30EZ	WJ30EZ	1	●	D30	8374535*	355,00
DC183-05-13.800A1-WJ30EZ	WJ30EZ	1	●	D30	8374536*	355,00
DC183-05-14.000A1-WJ30EZ	WJ30EZ	1	●	D30	8374537*	355,00

Bezeichnung / Designation	Sorte / Grade	VE / US		Disc. Gr.	Article No.	EURO Stück / piece
DC183-05-14.288A1-WJ30EZ	WJ30EZ	1	●	D30	8374538[1]	465,00
DC183-05-14.500A1-WJ30EZ	WJ30EZ	1	●	D30	8374539[1]	465,00
DC183-05-15.000A1-WJ30EZ	WJ30EZ	1	●	D30	8374540[1]	465,00
DC183-05-15.100A1-WJ30EZ	WJ30EZ	1	●	D30	8374541[1]	465,00
DC183-05-15.300A1-WJ30EZ	WJ30EZ	1	●	D30	8374542[1]	465,00
DC183-05-15.500A1-WJ30EZ	WJ30EZ	1	●	D30	8374543[1]	465,00
DC183-05-15.800A1-WJ30EZ	WJ30EZ	1	●	D30	8374544[1]	465,00
DC183-05-15.875A1-WJ30EZ	WJ30EZ	1	●	D30	8374545[1]	465,00
DC183-05-16.000A1-WJ30EZ	WJ30EZ	1	●	D30	8374546[1]	465,00
DC183-08-03.000A1-WJ30EY	WJ30EY	1	●	D31	8374547[1]	219,00
DC183-08-03.300A1-WJ30EY	WJ30EY	1	●	D31	8374548[1]	219,00
DC183-08-03.500A1-WJ30EY	WJ30EY	1	●	D31	8374549[1]	219,00
DC183-08-04.000A1-WJ30EY	WJ30EY	1	●	D31	8374550[1]	219,00
DC183-08-04.200A1-WJ30EY	WJ30EY	1	●	D31	8374551[1]	219,00
DC183-08-04.500A1-WJ30EY	WJ30EY	1	●	D31	8374552[1]	219,00
DC183-08-04.763A1-WJ30EY	WJ30EY	1	●	D31	8374553[1]	219,00
DC183-08-05.000A1-WJ30EY	WJ30EY	1	●	D31	8374554[1]	219,00
DC183-08-05.100A1-WJ30EY	WJ30EY	1	●	D31	8374555[1]	219,00
DC183-08-05.500A1-WJ30EY	WJ30EY	1	●	D31	8374556[1]	219,00
DC183-08-05.800A1-WJ30EY	WJ30EY	1	●	D31	8374557[1]	219,00
DC183-08-06.000A1-WJ30EY	WJ30EY	1	●	D31	8374558[1]	219,00
DC183-08-06.350A1-WJ30EY	WJ30EY	1	●	D31	8374559[1]	262,00
DC183-08-06.500A1-WJ30EY	WJ30EY	1	●	D31	8374560[1]	262,00
DC183-08-06.800A1-WJ30EY	WJ30EY	1	●	D31	8374561[1]	262,00
DC183-08-07.000A1-WJ30EY	WJ30EY	1	●	D31	8374562[1]	262,00
DC183-08-07.800A1-WJ30EY	WJ30EY	1	●	D31	8374563[1]	262,00
DC183-08-08.000A1-WJ30EY	WJ30EY	1	●	D31	8374564[1]	262,00
DC183-08-08.500A1-WJ30EY	WJ30EY	1	●	D31	8374565[1]	306,00
DC183-08-09.000A1-WJ30EY	WJ30EY	1	●	D31	8374566[1]	306,00
DC183-08-09.800A1-WJ30EY	WJ30EY	1	●	D31	8374567[1]	306,00
DC183-08-10.000A1-WJ30EY	WJ30EY	1	●	D31	8374568[1]	306,00
DC183-08-10.500A1-WJ30EY	WJ30EY	1	●	D31	8374569[1]	415,00
DC183-08-11.000A1-WJ30EY	WJ30EY	1	●	D31	8374570[1]	415,00
DC183-08-11.113A1-WJ30EY	WJ30EY	1	●	D31	8374571[1]	415,00
DC183-08-12.000A1-WJ30EY	WJ30EY	1	●	D31	8374572[1]	415,00
DC183-08-12.700A1-WJ30EY	WJ30EY	1	●	D31	8374573[1]	569,00
DC183-08-13.000A1-WJ30EY	WJ30EY	1	●	D31	8374574[1]	569,00
DC183-08-13.500A1-WJ30EY	WJ30EY	1	●	D31	8374575[1]	569,00
DC183-08-14.000A1-WJ30EY	WJ30EY	1	●	D31	8374576[1]	569,00
DC183-08-15.000A1-WJ30EY	WJ30EY	1	●	D31	8374577[1]	743,00
DC183-08-16.000A1-WJ30EY	WJ30EY	1	●	D31	8374578[1]	743,00
DC260-03-03.300A0-WJ30ET	WJ30ET	1	●	D20	7378925	108,00
DC260-03-03.300A1-WJ30ET	WJ30ET	1	●	D20	7378926	129,00
DC260-03-03.300F0-WJ30ET	WJ30ET	1	○	D20	7378927	114,00
DC260-03-03.300F1-WJ30ET	WJ30ET	1	●	D20	7378928	133,00
DC260-03-04.200A0-WJ30ET	WJ30ET	1	●	D20	7378929	108,00
DC260-03-04.200A1-WJ30ET	WJ30ET	1	●	D20	7378930	129,00
DC260-03-04.200F0-WJ30ET	WJ30ET	1	●	D20	7378931	114,00
DC260-03-04.200F1-WJ30ET	WJ30ET	1	●	D20	7378932	133,00
DC260-03-05.000A0-WJ30ET	WJ30ET	1	●	D20	7378933	129,00
DC260-03-05.000A1-WJ30ET	WJ30ET	1	●	D20	7378934	155,00
DC260-03-05.000F0-WJ30ET	WJ30ET	1	●	D20	7378935	134,00
DC260-03-05.000F1-WJ30ET	WJ30ET	1	●	D20	7378936	160,00
DC260-03-06.800A0-WJ30ET	WJ30ET	1	●	D20	7378937	151,00
DC260-03-06.800A1-WJ30ET	WJ30ET	1	●	D20	7378938	181,00
DC260-03-06.800F0-WJ30ET	WJ30ET	1	●	D20	7378939	155,00
DC260-03-06.800F1-WJ30ET	WJ30ET	1	●	D20	7378940	186,00
DC260-03-07.000F0-WJ30ET	WJ30ET	1	○	D20	7378941	155,00
DC260-03-08.500A0-WJ30ET	WJ30ET	1	●	D20	7378942	205,00
DC260-03-08.500A1-WJ30ET	WJ30ET	1	●	D20	7378943	246,00
DC260-03-08.500F0-WJ30ET	WJ30ET	1	●	D20	7378944	208,00
DC260-03-08.500F1-WJ30ET	WJ30ET	1	●	D20	7378945	253,00
DC260-03-09.000F0-WJ30ET	WJ30ET	1	○	D20	7378946	208,00
DC260-03-10.200A0-WJ30ET	WJ30ET	1	●	D20	7378947	280,00
DC260-03-10.200A1-WJ30ET	WJ30ET	1	●	D20	7378948	336,00
DC260-03-10.200F0-WJ30ET	WJ30ET	1	●	D20	7378949	278,00
DC260-03-10.200F1-WJ30ET	WJ30ET	1	●	D20	7378950	346,00
DC260-03-10.500F0-WJ30ET	WJ30ET	1	○	D20	7378951	278,00
DC260-03-12.000A0-WJ30ET	WJ30ET	1	●	D20	7378952	366,00
DC260-03-12.000A1-WJ30ET	WJ30ET	1	●	D20	7378953	439,00

Bezeichnung / Designation	Sorte / Grade	VE / US		Disc. Gr.	Article No.	EURO Stück / piece
DC260-03-12.000F0-WJ30ET	WJ30ET	1	○	D20	7378954	338,00
DC260-03-12.000F1-WJ30ET	WJ30ET	1	●	D20	7378955	453,00
DC260-03-12.500F0-WJ30ET	WJ30ET	1	○	D20	7378956	338,00
DC260-03-14.000A0-WJ30ET	WJ30ET	1	●	D20	7378957	463,00
DC260-03-14.000A1-WJ30ET	WJ30ET	1	●	D20	7378958	556,00
DC260-03-14.000F0-WJ30ET	WJ30ET	1	○	D20	7378959	497,00
DC260-03-14.000F1-WJ30ET	WJ30ET	1	○	D20	7378960[2]	572,00
DC260-03-14.500F0-WJ30ET	WJ30ET	1	○	D20	7378961	497,00
DCBNL2525M12		1	●	060	5673859	105,00
DCBNL2525M16		1	●	060	5673874	105,00
DCBNL3225P12		1	●	060	5673871	116,00
DCBNL3232P16		1	●	060	5673876	141,00
DCBNL3232P19		1	●	060	5673879	141,00
DCBNR2525M12		1	●	060	5673870	105,00
DCBNR2525M16		1	●	060	5673875	105,00
DCBNR3225P12		1	●	060	5673872	116,00
DCBNR3232P16		1	●	060	5673878	141,00
DCBNR3232P19		1	●	060	5673890	141,00
DCGT070201-FM2	WSM20S	10	●	029	7054054	16,69
DCGT070201-FN2	WNN10	10	●	028	6955649	15,42
DCGT070201-MN2	WN10	10	●	028	8132976	12,65
DCGT070201-MN2	WNN10	10	●	028	6955702	15,42
DCGT070202-FM2	WSM01	10	●	029	7499356	17,22
DCGT070202-FM2	WSM10S	10	●	029	7570122	16,69
DCGT070202-FM2	WSM20S	10	●	029	7054055	16,69
DCGT070202-FN2	WN10	10	●	028	8132977	12,65
DCGT070202-FN2	WNN10	10	●	028	6955650	15,42
DCGT070202-MN2	WN10	10	●	028	8132978	12,65
DCGT070202-MN2	WNN10	10	●	028	6955703	15,42
DCGT070202-MN2	WSM01	10	●	029	6876626	17,22
DCGT070202-PF2	WSM20	10	●	029	5834961	16,69
DCGT070202-PM2	WXN10	10	●	028	5025580	15,42
DCGT070202FS-1	WDN10	2	●	025	6674544	64,20
DCGT070202M-FP2	WEP10C	10	●	029	7780040	15,03
DCGT070204-FM2	WSM01	10	●	029	7499357	17,22
DCGT070204-FM2	WSM10S	10	●	029	7570123	16,69
DCGT070204-FM2	WSM20S	10	●	029	7054056	16,69
DCGT070204-FN2	WN10	10	●	028	8132979	12,65
DCGT070204-FN2	WNN10	10	●	028	6955651	15,42
DCGT070204-MM4	WSM01	10	●	029	7021256	17,22
DCGT070204-MM4	WSM20S	10	●	029	6844621	16,69
DCGT070204-MN2	WN10	10	●	028	8132980	12,65
DCGT070204-MN2	WNN10	10	●	028	6955704	15,42
DCGT070204-MN2	WSM01	10	●	029	6876627	17,22
DCGT070204-MP4	WPP20G	10	●	029	8204594	17,20
DCGT070204-PF2	WXN10	10	●	028	5197931	15,42
DCGT070204-PM2	WXN10	10	●	028	5025581	15,42
DCGT070204FS-1	WDN10	2	●	025	6674545	64,20
DCGT070204FS-M1	WDN10	2	●	025	6674449	89,90
DCGT070204M-FP2	WEP10C	10	●	029	7779959	15,03
DCGT070208FS-1	WDN10	2	●	025	6674546	64,20
DCGT11T3005M-FP2	WEP10C	10	●	029	7947826	18,05
DCGT11T301-FM2	WSM20S	10	●	029	7054057	20,03
DCGT11T301-FN2	WNN10	10	●	028	6955652	18,51
DCGT11T301-MN2	WN10	10	●	028	8132981	15,17
DCGT11T301-MN2	WNN10	10	●	028	6955705	18,51
DCGT11T301-MN2	WSM01	10	●	029	8226511	20,65
DCGT11T301-PF2	WSM20	10	●	029	5834963	20,03
DCGT11T301M-FP2	WEP10C	10	●	029	7780041	18,05
DCGT11T302-FL2	WSM01	10	●	029	8369469	20,65
DCGT11T302-FM2	WSM01	10	●	029	7499358	20,65
DCGT11T302-FM2	WSM10S	10	●	029	7570124	20,03
DCGT11T302-FM2	WSM20S	10	●	029	7054058	20,03
DCGT11T302-FN2	WN10	10	●	028	8132982	15,17
DCGT11T302-FN2	WNN10	10	●	028	6955653	18,51
DCGT11T302-MM4	WSM01	10	●	029	7469055	20,65
DCGT11T302-MM4	WSM20S	10	●	029	7469056	20,03
DCGT11T302-MN2	WN10	10	●	028	8132983	15,17
DCGT11T302-MN2	WNN10	10	●	028	6955706	18,51
DCGT11T302-MN2	WSM01	10	●	029	6876628	20,65

Bezeichnung / Designation	Sorte / Grade	VE / US		Disc. Gr.	Article No.	EURO Stück / piece
DCGT11T302-PF2	WSM20	10	●	029	5834965	20,03
DCGT11T302-PF2	WXN10	10	●	028	5198005	18,51
DCGT11T302-PM2	WXN10	10	●	028	5025582	18,51
DCGT11T302FS-1	WDN10	2	●	025	6674547	73,80
DCGT11T302M-FP2	WEP10C	10	●	029	7780042	18,05
DCGT11T304-FL2	WPP20G	10	●	029	8369470	20,64
DCGT11T304-FL2	WSM01	10	●	029	8369471	20,65
DCGT11T304-FM2	WSM01	10	●	029	7499359	20,65
DCGT11T304-FM2	WSM10S	10	●	029	7054059	20,03
DCGT11T304-FM2	WSM20S	10	●	029	7054060	20,03
DCGT11T304-FN2	WN10	10	●	028	8132984	15,17
DCGT11T304-FN2	WNN10	10	●	028	6955654	18,51
DCGT11T304-MM4	WSM01	10	●	029	7021257	20,65
DCGT11T304-MM4	WSM10S	10	●	029	7499339	20,03
DCGT11T304-MM4	WSM20S	10	●	029	6844622	20,03
DCGT11T304-MN2	WN10	10	●	028	8132985	15,17
DCGT11T304-MN2	WNN10	10	●	028	6955707	18,51
DCGT11T304-MN2	WSM01	10	●	029	6876629	20,65
DCGT11T304-MP4	WPP10G	10	●	029	8204596	20,64
DCGT11T304-MP4	WPP20G	10	●	029	8204595	20,64
DCGT11T304-MP4	WPP20S	10	■	029	6218217*	20,64
DCGT11T304-PF2	WSM10	10	●	029	5939060	20,03
DCGT11T304-PF2	WSM20	10	●	029	5834966	20,03
DCGT11T304-PF2	WXN10	10	●	028	5197925	18,51
DCGT11T304-PM2	WXN10	10	●	028	5025583	18,51
DCGT11T304FS-1	WDN10	2	●	025	6674448	73,80
DCGT11T304FS-M1	WDN10	2	●	025	6674450	103,00
DCGT11T304M-FP2	WEP10C	10	●	029	7780020	18,05
DCGT11T308-FL2	WPP20G	10	●	029	8369472	20,64
DCGT11T308-FL2	WSM01	10	●	029	8369473	20,65
DCGT11T308-FM2	WSM01	10	●	029	7499380	20,65
DCGT11T308-FM2	WSM10S	10	●	029	7054061	20,03
DCGT11T308-FM2	WSM20S	10	●	029	7054062	20,03
DCGT11T308-FN2	WN10	10	●	028	8132986	15,17
DCGT11T308-FN2	WNN10	10	●	028	6955655	18,51
DCGT11T308-MM4	WSM01	10	●	029	7021258	20,65
DCGT11T308-MM4	WSM10S	10	●	029	7499350	20,03
DCGT11T308-MM4	WSM20S	10	●	029	6844623	20,03
DCGT11T308-MN2	WN10	10	●	028	8132987	15,17
DCGT11T308-MN2	WNN10	10	●	028	6955708	18,51
DCGT11T308-MN2	WSM01	10	●	029	7134133	20,65
DCGT11T308-MP4	WPP10G	10	●	029	8204598	20,64
DCGT11T308-MP4	WPP20G	10	●	029	8204597	20,64
DCGT11T308-PF2	WXN10	10	●	028	5197929	18,51
DCGT11T308-PM2	WXN10	10	●	028	5025584	18,51
DCGT11T308FS-1	WDN10	2	●	025	6674548	73,80
DCGT11T308M-FP2	WEP10C	10	●	029	7780043	18,05
DCGW070202EM-2	WBS10	2	●	023	7636874	73,80
DCGW070202FS-1	WDN10	2	●	025	6674444	62,30
DCGW070202TM-2	WBH20	2	●	023	7636873	70,10
DCGW070202TS-2	WBH10	2	●	023	7636871	70,10
DCGW070202TS-2	WBK20	2	■	023	7823863*	70,10
DCGW070204EM-2	WBS10	2	●	023	7636878	73,80
DCGW070204FS-1	WDN10	2	●	025	6674445	62,30
DCGW070204TM-2	WBH10	2	●	023	7636875	70,10
DCGW070204TM-2	WBH10C	2	●	023	7636876	77,10
DCGW070204TM-2	WBH20	2	●	023	7636877	70,10
DCGW070204TS-2	WBK20	2	●	023	7823864	70,10
DCGW070208FS-1	WDN10	2	●	025	6674542	62,30
DCGW070208TM-2	WBH10	2	■	023	7636879*	70,10
DCGW070208TM-2	WBH10C	2	●	023	7636880	77,10
DCGW070208TM-2	WBH20	2	●	023	7636881	70,10
DCGW070208TS-2	WBK20	2	●	023	7823865	70,10
DCGW11T302FS-1	WDN10	2	●	025	6674543	71,70
DCGW11T302TM-2	WBH20	2	●	023	7636884	70,10
DCGW11T302TM-2	WBH30	2	●	023	8060982	70,10
DCGW11T302TS-2	WBH10	2	●	023	7636882	70,10
DCGW11T302TS-2	WBH10C	2	●	023	7636883	77,10
DCGW11T302TS-2	WBH20C	2	●	023	8306527	77,10
DCGW11T302TS-2	WBK20	2	■	023	7823866*	70,10

Bezeichnung / Designation	Sorte / Grade	VE / US		Disc. Gr.	Article No.	EURO Stück / piece
DCGW11T304EM-2	WBS10	2	●	023	7636888	73,80
DCGW11T304FS-1	WDN10	2	●	025	6674446	71,70
DCGW11T304TM-2	WBH10	2	●	023	7636885	70,10
DCGW11T304TM-2	WBH10C	2	●	023	7636886	77,10
DCGW11T304TM-2	WBH20	2	●	023	7636887	70,10
DCGW11T304TM-2	WBH20C	2	●	023	8306528	77,10
DCGW11T304TM-2	WBH30	2	●	023	8060983	70,10
DCGW11T304TS-2	WBK20	2	●	023	7823867	70,10
DCGW11T308EM-2	WBS10	2	●	023	7636892	73,80
DCGW11T308FS-1	WDN10	2	●	025	6674447	71,70
DCGW11T308TM-2	WBH10	2	●	023	7636889	70,10
DCGW11T308TM-2	WBH10C	2	●	023	7636890	77,10
DCGW11T308TM-2	WBH20	2	●	023	7636891	70,10
DCGW11T308TM-2	WBH20C	2	●	023	8306529	77,10
DCGW11T308TM-2	WBH30	2	●	023	8060984	70,10
DCGW11T308TS-2	WBK20	2	●	023	7823868	70,10
DCKNL164D		1	●	060	6347625	105,00
DCKNL205D		1	●	060	6347627	141,00
DCKNL2525M12		1	●	060	5673891	105,00
DCKNL3225P12		1	●	060	5673893	116,00
DCKNL3232P16		1	●	060	5673895	141,00
DCKNR164D		1	●	060	6347626	105,00
DCKNR205D		1	●	060	6347628	141,00
DCKNR2525M12		1	●	060	5673892	105,00
DCKNR3225P12		1	●	060	5673894	116,00
DCKNR3232P16		1	●	060	5673896	141,00
DCLNL103A		1	●	060	6347629	86,60
DCLNL123C		1	●	060	6347701	99,30
DCLNL124B-P		1	●	060	7031692	242,00
DCLNL1616H12		1	●	060	5673857	89,10
DCLNL164D-P		1	●	060	6824155	255,00
DCLNL165D-P		1	●	060	7031724	255,00
DCLNL2020K12		1	●	060	5042188	99,30
DCLNL2020X12-P		1	●	060	6824151	242,00
DCLNL2525M12		1	●	060	5042190	105,00
DCLNL2525M16		1	●	060	5042192	105,00
DCLNL2525X12-P		1	●	060	6824153	255,00
DCLNL2525X16-P		1	●	060	7031663	255,00
DCLNL3225P12		1	●	060	5042194	116,00
DCLNL3225P16		1	●	060	5042196	116,00
DCLNL3232P16		1	●	060	5042198	141,00
DCLNL3232P19		1	●	060	5042200	141,00
DCLNL3232X16-P		1	●	060	7511909	318,00
DCLNR103A		1	●	060	6347700	86,60
DCLNR123C		1	●	060	6347702	99,30
DCLNR124B-P		1	●	060	7031693	242,00
DCLNR1616H12		1	●	060	5673858	89,10
DCLNR164D-P		1	●	060	6824156	255,00
DCLNR165D-P		1	●	060	7031725	255,00
DCLNR2020K12		1	●	060	5042189	99,30
DCLNR2020X12-P		1	●	060	6824152	242,00
DCLNR2525M12		1	●	060	5042191	105,00
DCLNR2525M16		1	●	060	5042193	105,00
DCLNR2525X12-P		1	●	060	6824154	255,00
DCLNR2525X16-P		1	●	060	7031664	255,00
DCLNR3225P12		1	●	060	5042195	116,00
DCLNR3225P16		1	●	060	5042197	116,00
DCLNR3232P16		1	●	060	5042199	141,00
DCLNR3232P19		1	●	060	5042201	141,00
DCLNR3232X16-P		1	●	060	7512200	318,00
DCMT070202-FM4	WSM01	10	●	029	8190164	9,96
DCMT070202-FM4	WSM10S	10	●	029	6917253	9,67
DCMT070202-FM4	WSM20S	10	●	029	6917254	9,67
DCMT070202-FM4	WSM30S	10	●	029	6917255	9,67
DCMT070202-FP4	WEP10C	10	●	029	7425457	8,70
DCMT070202-FP4	WKP01G	10	●	029	8422875	9,96
DCMT070202-FP4	WPP10G	10	●	029	8204620	9,96
DCMT070202-FP4	WPP20G	10	●	029	8204599	9,96
DCMT070202-FP4	WPP20S	10	■	029	6444224*	9,96
DCMT070202-FW4	WPP20G	10	●	029	8296375	11,44

Bezeichnung / Designation	Sorte / Grade	VE / US		Disc. Gr.	Article No.	EURO Stück / piece
DCMT070202-FW4	WSM20S	10	●	029	8296376	11,10
DCMT070202-PF4	WSM30	10	●	029	5357179	9,67
DCMT070204-FK6	WKK10S	10	●	029	6733983	9,67
DCMT070204-FK6	WKK20S	10	●	029	6733984	9,67
DCMT070204-FM4	WMP20S	10	●	029	6464120	9,67
DCMT070204-FM4	WSM01	10	●	029	8190165	9,96
DCMT070204-FM4	WSM10S	10	●	029	6839039	9,67
DCMT070204-FM4	WSM20S	10	●	029	6839040	9,67
DCMT070204-FM4	WSM30S	10	●	029	6839041	9,67
DCMT070204-FM6	WSM20S	10	●	029	7054139	9,67
DCMT070204-FM6	WSM30S	10	●	029	7054140	9,67
DCMT070204-FP4	WEP10C	10	●	029	7425458	8,70
DCMT070204-FP4	WKP01G	10	●	029	8422876	9,96
DCMT070204-FP4	WPP10G	10	●	029	8204622	9,96
DCMT070204-FP4	WPP10S	10	■	029	6440686[1]	9,96
DCMT070204-FP4	WPP20G	10	●	029	8204621	9,96
DCMT070204-FP4	WPP20S	10	●	029	6444226[2]	9,96
DCMT070204-FP6	WPP10G	10	●	029	8204624	9,96
DCMT070204-FP6	WPP20G	10	●	029	8204623	9,96
DCMT070204-FP6	WPP20S	10	■	029	6730393[1]	9,96
DCMT070204-FW4	WKP01G	10	●	029	8422872	11,42
DCMT070204-FW4	WPP10G	10	●	029	8296377	11,44
DCMT070204-FW4	WPP20G	10	●	029	8296378	11,44
DCMT070204-FW4	WSM10S	10	●	029	8296379	11,10
DCMT070204-FW4	WSM20S	10	●	029	8296380	11,10
DCMT070204-FW4	WSM30S	10	●	029	8296381	11,10
DCMT070204-MK4	WKK10S	10	●	029	6485503	9,67
DCMT070204-MK4	WKK20S	10	●	029	6484653	9,67
DCMT070204-MM4	WMP20S	10	●	029	6636295	9,67
DCMT070204-MM4	WSM10S	10	●	029	6836823	9,67
DCMT070204-MM4	WSM20S	10	●	029	6836822	9,67
DCMT070204-MM4	WSM30S	10	●	029	7054175	9,67
DCMT070204-MP4	WPP10G	10	●	029	8204626	9,96
DCMT070204-MP4	WPP20G	10	●	029	8204625	9,96
DCMT070204-MP4	WPP20S	10	■	029	6427231[1]	9,96
DCMT070204-PF	WPP10S	10	■	029	6780273[1]	11,44
DCMT070204-PF	WSM20S	10	●	029	7054097[1]	11,10
DCMT070204-PF	WSM30S	10	■	029	7054098[1]	11,10
DCMT070204-PF4	WSM20	10	●	029	5615022	9,67
DCMT070204-RK4	WKK10S	10	●	029	6650909	9,67
DCMT070204-RK4	WKK20S	10	●	029	6651080	9,67
DCMT070204-RM4	WMP20S	10	●	029	6461851	9,67
DCMT070204-RM4	WSM10S	10	●	029	6839110	9,67
DCMT070204-RM4	WSM20S	10	●	029	6839111	9,67
DCMT070204-RM4	WSM30S	10	●	029	6839112	9,67
DCMT070204-RP4	WPP10G	10	●	029	8204629	9,96
DCMT070204-RP4	WPP20G	10	●	029	8204627	9,96
DCMT070204-RP4	WPP20S	10	■	029	6449032[1]	9,96
DCMT070204-RP4	WPP30G	10	●	029	8204628	9,96
DCMT070208-FM4	WSM10S	10	●	029	6917256	9,67
DCMT070208-FM4	WSM20S	10	●	029	6917257	9,67
DCMT070208-FP4	WPP10G	10	●	029	8204630	9,96
DCMT070208-FP4	WPP20G	10	●	029	8204631	9,96
DCMT070208-FP4	WPP20S	10	■	029	6444801[1]	9,96
DCMT070208-FW4	WPP10G	10	●	029	8296382	11,44
DCMT070208-FW4	WPP20G	10	●	029	8296383	11,44
DCMT070208-FW4	WSM20S	10	●	029	8296384	11,10
DCMT070208-FW4	WSM30S	10	●	029	8296385	11,10
DCMT070208-MK4	WKK20S	10	●	029	6484665	9,67
DCMT070208-MM4	WMP20S	10	●	029	6636296	9,67
DCMT070208-MM4	WSM10S	10	●	029	6836825	9,67
DCMT070208-MM4	WSM20S	10	●	029	6836824	9,67
DCMT070208-MP4	WPP10G	10	●	029	8204633	9,96
DCMT070208-MP4	WPP20G	10	●	029	8204632	9,96
DCMT070208-MP4	WPP20S	10	■	029	6427272[1]	9,96
DCMT070208-PF	WSM20S	10	■	029	7054099[1]	11,10
DCMT070208-PF	WSM30S	10	■	029	7054100[1]	11,10
DCMT070208-RM4	WSM10S	10	●	029	6917295	9,67
DCMT070208-RM4	WSM20S	10	●	029	6917296	9,67
DCMT070208-RM4	WSM30S	10	●	029	6917297	9,67

Bezeichnung / Designation	Sorte / Grade	VE / US		Disc. Gr.	Article No.	EURO Stück / piece
DCMT070208-RP4	WPP10G	10	●	029	8204636	9,96
DCMT070208-RP4	WPP20G	10	●	029	8204634	9,96
DCMT070208-RP4	WPP20S	10	■	029	6449034[1]	9,96
DCMT070208-RP4	WPP30G	10	●	029	8204635	9,96
DCMT11T302-FM4	WMP20S	10	●	029	6464145	13,51
DCMT11T302-FM4	WSM01	10	●	029	8190166	13,90
DCMT11T302-FM4	WSM10S	10	●	029	6839042	13,51
DCMT11T302-FM4	WSM20S	10	●	029	6839043	13,51
DCMT11T302-FM4	WSM30S	10	●	029	6839044	13,51
DCMT11T302-FP4	WEP10C	10	●	029	7425459	12,15
DCMT11T302-FP4	WKP01G	10	●	029	8422877	13,90
DCMT11T302-FP4	WPP10G	10	●	029	8204638	13,90
DCMT11T302-FP4	WPP10S	10	■	029	6441105[1]	13,90
DCMT11T302-FP4	WPP20G	10	●	029	8204637	13,90
DCMT11T302-FP4	WPP20S	10	●	029	6444802[2]	13,90
DCMT11T302-FW4	WPP20G	10	●	029	8296386	15,96
DCMT11T302-FW4	WSM10S	10	●	029	8296387	15,50
DCMT11T302-FW4	WSM20S	10	●	029	8296388	15,50
DCMT11T302-MM4	WSM01	10	●	029	8190174	13,90
DCMT11T302-MM4	WSM20S	10	●	029	7409887	13,51
DCMT11T302-MM4	WSM30S	10	●	029	7409888	13,51
DCMT11T302-PF4	WSM10	10	●	029	5848639	13,51
DCMT11T302-PF4	WSM20	10	●	029	5615024	13,51
DCMT11T304-FK6	WKK10S	10	●	029	6733985	13,51
DCMT11T304-FK6	WKK20S	10	●	029	6733986	13,51
DCMT11T304-FM4	WMP20S	10	●	029	6464201	13,51
DCMT11T304-FM4	WSM01	10	●	029	8190167	13,90
DCMT11T304-FM4	WSM10S	10	●	029	6839045	13,51
DCMT11T304-FM4	WSM20S	10	●	029	6839046	13,51
DCMT11T304-FM4	WSM30S	10	●	029	6839047	13,51
DCMT11T304-FM6	WSM20S	10	●	029	7054141	13,51
DCMT11T304-FM6	WSM30S	10	●	029	7054142	13,51
DCMT11T304-FP4	WEP10C	10	●	029	7425540	12,15
DCMT11T304-FP4	WKP01G	10	●	029	8422878	13,90
DCMT11T304-FP4	WPP10G	10	●	029	8204639	13,90
DCMT11T304-FP4	WPP10S	10	●	029	6441147[2]	13,90
DCMT11T304-FP4	WPP20G	10	●	029	8201085	13,90
DCMT11T304-FP4	WPP20S	10	●	029	6444803[2]	13,90
DCMT11T304-FP6	WPP10G	10	●	029	8204641	13,90
DCMT11T304-FP6	WPP10S	10	■	029	6730396[1]	13,90
DCMT11T304-FP6	WPP20G	10	●	029	8204640	13,90
DCMT11T304-FP6	WPP20S	10	■	029	6730395[1]	13,90
DCMT11T304-FW4	WKP01G	10	●	029	8422873	15,94
DCMT11T304-FW4	WPP10G	10	●	029	8296389	15,96
DCMT11T304-FW4	WPP20G	10	●	029	8296390	15,96
DCMT11T304-FW4	WSM10S	10	●	029	8296391	15,50
DCMT11T304-FW4	WSM20S	10	●	029	8296392	15,50
DCMT11T304-FW4	WSM30S	10	●	029	8296393	15,50
DCMT11T304-MK4	WKK10S	10	●	029	6636208	13,51
DCMT11T304-MK4	WKK20S	10	●	029	6636209	13,51
DCMT11T304-MM4	WMP20S	10	●	029	6636297	13,51
DCMT11T304-MM4	WSM01	10	●	029	8190175	13,90
DCMT11T304-MM4	WSM10S	10	●	029	6836827	13,51
DCMT11T304-MM4	WSM20S	10	●	029	6836826	13,51
DCMT11T304-MM4	WSM30S	10	●	029	7054176	13,51
DCMT11T304-MP4	WPP10G	10	●	029	8204643	13,90
DCMT11T304-MP4	WPP10S	10	■	029	6413566[1]	13,90
DCMT11T304-MP4	WPP20G	10	●	029	8204642	13,90
DCMT11T304-MP4	WPP20S	10	●	029	6413469[2]	13,90
DCMT11T304-MP6	WPP10G	10	●	029	8205078	13,90
DCMT11T304-MP6	WPP20G	10	●	029	8205079	13,90
DCMT11T304-MP6	WPP30G	10	●	029	8205080	13,90
DCMT11T304-MW4	WKK10S	10	●	029	8296306	15,50
DCMT11T304-MW4	WKK20S	10	●	029	8296307	15,50
DCMT11T304-MW4	WPP10G	10	●	029	8296308	15,96
DCMT11T304-MW4	WPP20G	10	●	029	8296309	15,96
DCMT11T304-MW4	WSM20S	10	●	029	8296310	15,50
DCMT11T304-PF	WAM20	10	●	029	5043351	15,89
DCMT11T304-PF	WPP01	10	●	029	5262949[1]	15,96
DCMT11T304-PF	WPP10S	10	■	029	6780274[1]	15,96

Bezeichnung / Designation	Sorte / Grade	VE / US		Disc. Gr.	Article No.	EURO Stück / piece
DCMT11T304-PF	WPP20S	10	●	029	6780275[1]	15,96
DCMT11T304-PF	WSM20S	10	●	029	7054101[2]	15,50
DCMT11T304-PF	WSM30S	10	●	029	7054102[2]	15,50
DCMT11T304-PF4	WPP01	10	■	029	5262970[2]	13,90
DCMT11T304-PF4	WSM10	10	●	029	5848640	13,51
DCMT11T304-PF4	WSM20	10	●	029	5615026	13,51
DCMT11T304-PF4	WSM30	10	●	029	5357198	13,51
DCMT11T304-PM	WKK10S	10	■	029	6780258[2]	15,50
DCMT11T304-PM	WKK20S	10	●	029	6780259[2]	15,50
DCMT11T304-PM	WPP10S	10	■	029	6780260[2]	15,50
DCMT11T304-PM	WPP20S	10	■	029	6780261[2]	15,50
DCMT11T304-PM	WSM20S	10	■	029	7054105[2]	15,50
DCMT11T304-PM5	WSM20	10	●	029	5614940	13,51
DCMT11T304-PS5	WSM20	10	●	029	5619934	13,51
DCMT11T304-RK4	WKK10S	10	●	029	6651083	13,51
DCMT11T304-RK4	WKK20S	10	●	029	6651084	13,51
DCMT11T304-RM4	WMP20S	10	●	029	6461855	13,51
DCMT11T304-RM4	WSM10S	10	●	029	6839113	13,51
DCMT11T304-RM4	WSM20S	10	●	029	6839114	13,51
DCMT11T304-RM4	WSM30S	10	●	029	6839115	13,51
DCMT11T304-RP4	WPP10G	10	●	029	8204646	13,90
DCMT11T304-RP4	WPP10S	10	■	029	6447940[2]	13,90
DCMT11T304-RP4	WPP20G	10	●	029	8204644	13,90
DCMT11T304-RP4	WPP20S	10	●	029	6449036[1]	13,90
DCMT11T304-RP4	WPP30G	10	●	029	8204645	13,90
DCMT11T304-RP4	WPP30S	10	■	029	6449037[2]	13,90
DCMT11T308-FK6	WKK10S	10	●	029	6733987	13,51
DCMT11T308-FK6	WKK20S	10	●	029	6733988	13,51
DCMT11T308-FM4	WMP20S	10	●	029	6464449	13,51
DCMT11T308-FM4	WSM01	10	●	029	8461473	13,91
DCMT11T308-FM4	WSM10S	10	●	029	6839048	13,51
DCMT11T308-FM4	WSM20S	10	●	029	6839049	13,51
DCMT11T308-FM4	WSM30S	10	●	029	6839050	13,51
DCMT11T308-FM6	WSM20S	10	●	029	7054143	13,51
DCMT11T308-FM6	WSM30S	10	●	029	7054144	13,51
DCMT11T308-FP4	WEP10C	10	●	029	7425541	12,15
DCMT11T308-FP4	WKP01G	10	●	029	8422879	13,90
DCMT11T308-FP4	WPP10G	10	●	029	8204647	13,90
DCMT11T308-FP4	WPP10S	10	●	029	6441175[1]	13,90
DCMT11T308-FP4	WPP20G	10	●	029	8204648	13,90
DCMT11T308-FP4	WPP20S	10	●	029	6444804[1]	13,90
DCMT11T308-FP6	WPP10G	10	●	029	8204649	13,90
DCMT11T308-FP6	WPP10S	10	■	029	6730397[2]	13,90
DCMT11T308-FP6	WPP20G	10	●	029	8204650	13,90
DCMT11T308-FW4	WKP01G	10	●	029	8422874	15,94
DCMT11T308-FW4	WPP10G	10	●	029	8296394	15,96
DCMT11T308-FW4	WPP20G	10	●	029	8296395	15,96
DCMT11T308-FW4	WSM10S	10	●	029	8296396	15,50
DCMT11T308-FW4	WSM20S	10	●	029	8296397	15,50
DCMT11T308-FW4	WSM30S	10	●	029	8296398	15,50
DCMT11T308-MK4	WKK10S	10	●	029	6485609	13,51
DCMT11T308-MK4	WKK20S	10	●	029	6337653	13,51
DCMT11T308-MM4	WMP20S	10	●	029	6636298	13,51
DCMT11T308-MM4	WSM01	10	●	029	8190176	13,91
DCMT11T308-MM4	WSM01	10	●	029	8190176	13,90
DCMT11T308-MM4	WSM10S	10	●	029	6836829	13,51
DCMT11T308-MM4	WSM20S	10	●	029	6836828	13,51
DCMT11T308-MM4	WSM30S	10	●	029	7054177	13,51
DCMT11T308-MP4	WPP10G	10	●	029	8204652	13,90
DCMT11T308-MP4	WPP10S	10	■	029	6412818[2]	13,90
DCMT11T308-MP4	WPP20G	10	●	029	8204651	13,90
DCMT11T308-MP4	WPP20S	10	●	029	6337652[1]	13,90
DCMT11T308-MP6	WPP10G	10	●	029	8205081	13,90
DCMT11T308-MP6	WPP20G	10	●	029	8205082	13,90
DCMT11T308-MP6	WPP30G	10	●	029	8205083	13,90
DCMT11T308-MW4	WKK10S	10	●	029	8296311	15,50
DCMT11T308-MW4	WKK20S	10	●	029	8296312	15,50
DCMT11T308-MW4	WPP10G	10	●	029	8296313	15,96
DCMT11T308-MW4	WPP20G	10	●	029	8296314	15,96
DCMT11T308-MW4	WSM20S	10	●	029	8296315	15,50

Bezeichnung / Designation	Sorte / Grade	VE / US		Disc. Gr.	Article No.	EURO Stück / piece
DCMT11T308-PF	WPP01	10	■	029	5262972[2]	15,94
DCMT11T308-PF	WPP10S	10	■	029	6780276[2]	15,96
DCMT11T308-PF	WPP20S	10	●	029	6780277[1]	15,96
DCMT11T308-PF	WSM20S	10	■	029	7054103[2]	15,50
DCMT11T308-PF	WSM30S	10	■	029	7054104[2]	15,50
DCMT11T308-PF4	WPP01	10	■	029	5262971[2]	13,90
DCMT11T308-PF4	WSM10	10	●	029	5848642	13,51
DCMT11T308-PM	WKK10S	10	●	029	6780262[2]	15,50
DCMT11T308-PM	WKK20S	10	■	029	6780263[2]	15,50
DCMT11T308-PM	WPP20S	10	■	029	6780265[2]	15,96
DCMT11T308-PM	WSM20S	10	■	029	7054106[2]	15,50
DCMT11T308-PM5	WSM20	10	●	029	5614941	13,51
DCMT11T308-RK4	WKK10S	10	●	029	6651085	13,51
DCMT11T308-RK4	WKK20S	10	●	029	6651086	13,51
DCMT11T308-RM4	WMP20S	10	●	029	6461897	13,51
DCMT11T308-RM4	WSM10S	10	●	029	6839116	13,51
DCMT11T308-RM4	WSM20S	10	●	029	6839117	13,51
DCMT11T308-RM4	WSM30S	10	●	029	6839118	13,51
DCMT11T308-RP4	WPP10G	10	●	029	8204655	13,90
DCMT11T308-RP4	WPP10S	10	■	029	6447985[2]	13,90
DCMT11T308-RP4	WPP20G	10	●	029	8204653	13,90
DCMT11T308-RP4	WPP20S	10	●	029	6449038[1]	13,90
DCMT11T308-RP4	WPP30G	10	●	029	8204654	13,90
DCMT11T308-RP4	WPP30S	10	■	029	6449039[2]	13,90
DCMT11T312-MK4	WKK20S	10	●	029	6484695	13,51
DCMT11T312-MM4	WSM20S	10	●	029	6836830	13,51
DCMT11T312-MP4	WPP10G	10	●	029	8204656	13,90
DCMT11T312-MP4	WPP10S	10	■	029	6483869[2]	13,90
DCMT11T312-MP4	WPP20G	10	●	029	8204657	13,90
DCMT11T312-RK4	WKK20S	10	●	029	6651088	13,51
DCMT11T312-RM4	WSM20S	10	●	029	6917298	13,51
DCMT11T312-RM4	WSM30S	10	●	029	6917299	13,51
DCMT11T312-RP4	WPP10G	10	●	029	8204659	13,90
DCMT11T312-RP4	WPP20G	10	●	029	8204660	13,90
DCMT11T312-RP4	WPP30G	10	●	029	8204658	13,90
DCMT11T312-RP4	WPP30S	10	■	029	6449081[2]	13,90
DCMT150404-MP6	WPP20G	10	●	029	8205098	17,08
DCMT150408	WSM20S	10	●	029	6907138	16,18
DCMT150408-MP6	WPP20G	10	●	029	8205099	17,08
DCMT150408-MP6	WPP30G	10	●	029	8205130	17,08
DCMW11T304-2	WCB50	1	■	023	5202136[2]	79,40
DCMW11T304-RK6	WKK10S	10	●	029	6651543	13,51
DCMW11T304-RK6	WKK20S	10	●	029	6651544	13,51
DCMW11T308	WAK10	10	●	029	5047042	13,51
DCMW11T308-RK6	WKK10S	10	●	029	6651545	13,51
DCMW11T308-RK6	WKK20S	10	●	029	6651546	13,51
DDHNL2020K15		1	●	060	6016592	99,30
DDHNL2525M15		1	●	060	6016594	105,00
DDHNR2020K15		1	●	060	6016593	99,30
DDHNR2525M15		1	●	060	6016595	105,00
DDJCL2020X11-P		1	●	060	7279019	242,00
DDJCL2525X11-P		1	●	060	7279141	255,00
DDJCR2020X11-P		1	●	060	7279140	242,00
DDJCR2525X11-P		1	●	060	7279142	255,00
DDJNL103A		1	●	060	6347705	86,60
DDJNL124B-P		1	●	060	7031694	242,00
DDJNL163D-P		1	●	060	6824226	255,00
DDJNL164D-P		1	●	060	6824228	255,00
DDJNL2020K11		1	●	060	5042237	99,30
DDJNL2020K15		1	●	060	5042239	99,30
DDJNL2020X11-P		1	●	060	6824189	242,00
DDJNL2020X15-P		1	●	060	6824221	242,00
DDJNL2525M11		1	●	060	5042241	105,00
DDJNL2525M15		1	●	060	5042243	105,00
DDJNL2525X11-P		1	●	060	7031632	255,00
DDJNL2525X15-P		1	●	060	6824223	255,00
DDJNL3225P11		1	●	060	5042245	116,00
DDJNL3225P15		1	●	060	5042247	116,00
DDJNL3232P15		1	●	060	5042249	141,00
DDJNR103A		1	●	060	6347706	86,60

Bezeichnung / Designation	Sorte / Grade	VE / US		Disc. Gr.	Article No.	EURO Stück / piece
DDJNR124B-P		1	●	060	7031695	242,00
DDJNR163D-P		1	●	060	6824227	255,00
DDJNR164D-P		1	●	060	6824229	255,00
DDJNR2020K11		1	●	060	5042238	99,30
DDJNR2020K15		1	●	060	5042240	99,30
DDJNR2020X11-P		1	●	060	6824220	242,00
DDJNR2020X15-P		1	●	060	6824222	242,00
DDJNR2525M11		1	●	060	5042242	105,00
DDJNR2525M15		1	●	060	5042244	105,00
DDJNR2525X11-P		1	●	060	7031633	255,00
DDJNR2525X15-P		1	●	060	6824224	255,00
DDJNR3225P11		1	●	060	5042246	116,00
DDJNR3225P15		1	●	060	5042248	116,00
DDJNR3232P15		1	●	060	5042250	141,00
DDNNN2020K11		1	●	060	5204611	99,30
DDNNN2525M11		1	●	060	5204612	105,00
DDNNN2525M15		1	●	060	5204613	105,00
DDNNN3225P15		1	●	060	5204614	116,00
DDPNN124B		1	●	060	7394636	101,00
DDPNN164D		1	●	060	7394637	105,00
DDPNN204D		1	●	060	7394638	142,00
DDQNL164D		1	●	060	6347707	105,00
DDQNL204D		1	●	060	6347709	141,00
DDQNR164D		1	●	060	6347708	105,00
DDQNR204D		1	●	060	6347730	141,00
DNGA150404EM-2	WBS10	2	●	023	7636815	71,70
DNGA150404SM-S	WCH10C	10	●	024	8064411	22,93
DNGA150404TM-2	WBH10	2	■	023	7636809[1]	68,10
DNGA150404TM-2	WBH10C	2	●	023	7636810	74,90
DNGA150404TM-2	WBH20	2	●	023	7636811	68,10
DNGA150404TM-M2	WBH10	2	●	023	7636814	74,90
DNGA150404TM-MW2	WBH10C	2	●	023	7636813	82,40
DNGA150408EM-2	WBS10	2	●	023	7636822	71,70
DNGA150408SM-S	WCH10C	10	●	024	8064412	22,93
DNGA150408TM-2	WBH10	2	●	023	7636817	68,10
DNGA150408TM-2	WBH10C	2	●	023	7636816	74,90
DNGA150408TM-2	WBH20	2	●	023	7636818	68,10
DNGA150408TM-M2	WBH10	2	●	023	7636821	74,90
DNGA150408TM-MW2	WBH10C	2	●	023	7636820	82,40
DNGA150412SM-S	WCH10C	10	●	024	8064413	22,93
DNGA150604SM-S	WCH10C	10	●	024	8064414	24,08
DNGA150604TM-2	WBH10	2	●	023	7636823	68,10
DNGA150604TM-2	WBH10C	2	●	023	7636824	74,90
DNGA150604TM-2	WBH20	2	●	023	7636825	68,10
DNGA150604TM-2	WBH20C	2	●	023	8306530	74,90
DNGA150604TM-2	WBH30	2	●	023	8060970	68,10
DNGA150604TM-M2	WBH10	2	●	023	7636828	74,90
DNGA150604TM-MW2	WBH10C	2	●	023	7636827	82,40
DNGA150604TS-2	WBK20	2	●	023	7823843	68,10
DNGA150608SM-S	WCH10C	10	●	024	8064415	24,08
DNGA150608T02020	WCK10	10	●	024	7349624	33,70
DNGA150608TM-2	WBH10	2	●	023	7636830	68,10
DNGA150608TM-2	WBH10C	2	●	023	7636829	74,90
DNGA150608TM-2	WBH20	2	●	023	7636831	68,10
DNGA150608TM-2	WBH20C	2	●	023	8306531	74,90
DNGA150608TM-2	WBH30	2	●	023	8060971	68,10
DNGA150608TM-4	WBH20C	2	●	023	8306532	123,00
DNGA150608TM-M2	WBH10	2	●	023	7636834	74,90
DNGA150608TS-2	WBK20	2	●	023	7823844	68,10
DNGA150612SM-S	WCH10C	10	●	024	8064416	24,08
DNGA150612T02020	WCK10	10	●	024	7349625	33,70
DNGA150612TM-2	WBH10	2	■	023	7636836[1]	68,10
DNGA150612TM-2	WBH10C	2	●	023	7636835	74,90
DNGA150612TM-2	WBH20	2	●	023	7636837	68,10
DNGA150612TM-2	WBH30	2	●	023	8060972	68,10
DNGA150612TM-M2	WBH10	2	●	023	7636840	74,90
DNGA150612TM-MW2	WBH10C	2	●	023	7636839	82,40
DNGA150612TS-2	WBK20	2	●	023	7823845	68,10
DNGG110402M-MN3	WN10	10	●	028	7778123	16,62
DNGG110402M-MN3	WNN10	10	●	028	7778124	23,28

Bezeichnung / Designation	Sorte / Grade	VE / US		Disc. Gr.	Article No.	EURO Stück / piece
DNGG110404M-MN3	WN10	10	●	028	7778125	16,62
DNGG110404M-MN3	WNN10	10	●	028	7778126	23,28
DNGG150402-MS3	WSM01	10	●	027	7021459	27,50
DNGG150404-MS3	WSM01	10	●	027	7021460	27,50
DNGG150408-MS3	WSM01	10	●	027	7021461	27,50
DNGG150604-NFT	WS10	10	●	027	5595810	22,27
DNGG150608-NFT	WS10	10	●	027	5592246	22,27
DNMA110404-RK5	WKK10S	10	●	027	6411287	14,78
DNMA110408-RK5	WKK10S	10	●	027	6411289	14,78
DNMA110408-RK5	WKK20S	10	■	027	6389519[1]	14,78
DNMA150408-RK5	WKK10S	10	●	027	6411301	17,83
DNMA150408-RK5	WKK20S	10	●	027	6390129	17,83
DNMA150412-RK5	WKK20S	10	●	027	6390414	17,83
DNMA150608-2	WCB50	1	●	023	5202105	79,40
DNMA150608-RK5	WKK10S	10	●	027	6411309	19,52
DNMA150608-RK5	WKK20S	10	●	027	6389613	19,52
DNMA150608-RK7	WKK10S	10	●	027	6431765	19,52
DNMA150608-RK7	WKK20S	10	●	027	6410352	19,52
DNMA150612-RK5	WKK10S	10	●	027	6411321	19,52
DNMA150612-RK5	WKK20S	10	●	027	6389794	19,52
DNMA150612-RK7	WKK10S	10	●	027	6431766	19,52
DNMA150612-RK7	WKK20S	10	●	027	6410440[2]	19,52
DNMG110402-FP5	WEP10C	10	●	027	8136983	13,30
DNMG110402-FP5	WPP10G	10	●	027	8115415	15,21
DNMG110402-FP5	WPP20G	10	●	027	8115416	15,21
DNMG110402-FP5	WPP20S	10	■	027	6065869[1]	15,21
DNMG110404-FM5	WMP20S	10	●	027	7091902	14,78
DNMG110404-FM5	WSM01	10	●	027	8461481	15,22
DNMG110404-FM5	WSM10S	10	●	027	7091903	14,78
DNMG110404-FM5	WSM20S	10	●	027	7091904	14,78
DNMG110404-FP5	WEP10C	10	●	027	8136984	13,30
DNMG110404-FP5	WKP01G	10	●	027	8422888	15,21
DNMG110404-FP5	WPP10G	10	●	027	8115417	15,21
DNMG110404-FP5	WPP10S	10	■	027	6059974[1]	15,21
DNMG110404-FP5	WPP20G	10	●	027	8115418	15,21
DNMG110404-FP5	WPP20S	10	■	027	6065880[1]	15,21
DNMG110404-FW5	WKP01G	10	●	027	8422883	17,46
DNMG110404-FW5	WPP10G	10	●	027	8115751	17,46
DNMG110404-FW5	WPP20G	10	●	027	8115752	17,46
DNMG110404-FW5	WSM10S	10	●	027	7933333	16,97
DNMG110404-FW5	WSM20S	10	●	027	7933332	16,97
DNMG110404-MK5	WKK10S	10	●	027	6353403	14,78
DNMG110404-MK5	WKK20S	10	●	027	6126040	14,78
DNMG110404-MM5	WMP20S	10	●	027	7376529	14,78
DNMG110404-MM5	WSM10S	10	●	027	7251934	14,78
DNMG110404-MM5	WSM20S	10	●	027	7251935	14,78
DNMG110404-MM5	WSM30S	10	●	027	7251936	14,78
DNMG110404-MP3	WPP10G	10	●	027	8115761	15,21
DNMG110404-MP3	WPP10S	10	■	027	6064248[1]	15,21
DNMG110404-MP3	WPP20G	10	●	027	8115762	15,21
DNMG110404-MP5	WPP10G	10	●	027	8115779	15,21
DNMG110404-MP5	WPP20G	10	●	027	8115780	15,21
DNMG110404-MP5	WPP30G	10	●	027	8115781	15,21
DNMG110404-NF3	WPP01	10	■	027	5262732[1]	15,21
DNMG110404-NM4	WSM10	10	●	027	5847115	14,78
DNMG110404-NM4	WSM30	10	■	027	5354547[1]	14,78
DNMG110404-NMT	WSM20S	10	●	027	7053977	14,78
DNMG110408-FM5	WMP20S	10	●	027	7091905	14,78
DNMG110408-FM5	WSM10S	10	●	027	7091906	14,78
DNMG110408-FM5	WSM20S	10	●	027	7091907	14,78
DNMG110408-FP5	WEP10C	10	●	027	8136985	13,30
DNMG110408-FP5	WKP01G	10	●	027	8422880	15,21
DNMG110408-FP5	WPP10G	10	●	027	8115419	15,21
DNMG110408-FP5	WPP10S	10	●	027	6057717[3]	15,21
DNMG110408-FP5	WPP20G	10	●	027	8115550	15,21
DNMG110408-FP5	WPP20S	10	■	027	6065881[1]	15,21
DNMG110408-FW5	WKP01G	10	●	027	8422884	17,46
DNMG110408-FW5	WPP10G	10	●	027	8115753	17,46
DNMG110408-FW5	WPP10S	10	■	027	7933334[1]	17,46
DNMG110408-FW5	WPP20G	10	●	027	8115754	17,46

Bezeichnung / Designation	Sorte / Grade	VE / US		Disc. Gr.	Article No.	EURO Stück / piece
DNMG110408-FW5	WSM10S	10	●	027	7933337	16,97
DNMG110408-FW5	WSM20S	10	●	027	7933336	16,97
DNMG110408-MK5	WKK10S	10	●	027	6353406	14,78
DNMG110408-MK5	WKK20S	10	●	027	6126051	14,78
DNMG110408-MM5	WMP20S	10	●	027	7376600	14,78
DNMG110408-MM5	WSM10S	10	●	027	7251937	14,78
DNMG110408-MM5	WSM20S	10	●	027	7251938	14,78
DNMG110408-MM5	WSM30S	10	●	027	7251939	14,78
DNMG110408-MP3	WPP05G	10	●	027	8411449	15,21
DNMG110408-MP3	WPP05S	10	●	027	6613406[1]	15,21
DNMG110408-MP3	WPP10G	10	●	027	8115763	15,21
DNMG110408-MP3	WPP10S	10	■	027	6064330[1]	15,21
DNMG110408-MP3	WPP20G	10	●	027	8115764	15,21
DNMG110408-MP3	WPP20S	10	■	027	6064520[1]	15,21
DNMG110408-MP3	WPP30G	10	●	027	8115765	15,21
DNMG110408-MP5	WPP05G	10	●	027	8411454	15,21
DNMG110408-MP5	WPP10G	10	●	027	8115782	15,21
DNMG110408-MP5	WPP10S	10	●	027	6187815[2]	15,21
DNMG110408-MP5	WPP20G	10	●	027	8115783	15,21
DNMG110408-MP5	WPP20S	10	■	027	6146011[1]	15,21
DNMG110408-MP5	WPP30G	10	●	027	8115784	15,21
DNMG110408-MP5	WPP30S	10	■	027	6187816[1]	15,21
DNMG110408-MS3	WMP20S	10	●	027	7903822	14,78
DNMG110408-MS3	WPP20G	10	●	027	8115808	15,21
DNMG110408-MS3	WSM01	10	●	027	7469059	15,22
DNMG110408-MS3	WSM10S	10	●	027	7469060	14,78
DNMG110408-MU5	WMP20S	10	●	027	7560034	14,78
DNMG110408-MU5	WPP10G	10	●	027	8115810	15,21
DNMG110408-MU5	WPP20G	10	●	027	8115811	15,21
DNMG110408-MU5	WSM20S	10	●	027	7560035	14,78
DNMG110408-MW5	WKK10S	10	●	027	7941511	16,97
DNMG110408-MW5	WKK20S	10	●	027	7941512	16,97
DNMG110408-MW5	WPP05G	10	●	027	8411462	17,46
DNMG110408-MW5	WPP10G	10	●	027	8115822	17,46
DNMG110408-MW5	WPP20G	10	●	027	8115823	17,46
DNMG110408-NM	WPP10S	10	●	027	6780205	17,46
DNMG110408-NM	WPP20S	10	●	027	6780206	17,46
DNMG110408-NM4	WSM20	10	●	027	5584886	14,78
DNMG110408-NMT	WSM20S	10	●	027	7053978	14,78
DNMG110408-RM5	WMP20S	10	●	027	6945379	14,78
DNMG110408-RM5	WSM20S	10	●	027	6945431	14,78
DNMG110408-RM5	WSM30S	10	●	027	6945432	14,78
DNMG110408-RP5	WPP10G	10	●	027	8115834	15,21
DNMG110408-RP5	WPP20G	10	●	027	8115835	15,21
DNMG110408-RP5	WPP30G	10	●	027	8115836	15,21
DNMG110412-FP5	WPP10G	10	●	027	8115729	15,21
DNMG110412-FP5	WPP10S	10	■	027	6059994[1]	15,21
DNMG110412-FP5	WPP20G	10	●	027	8115740	15,21
DNMG110412-MK5	WKK20S	10	●	027	6126059	14,78
DNMG110412-MP3	WPP10G	10	●	027	8115766	15,21
DNMG110412-MP3	WPP10S	10	■	027	6064331[1]	15,21
DNMG110412-MP3	WPP20G	10	●	027	8115767	15,21
DNMG110412-MP3	WPP20S	10	■	027	6064521[1]	15,21
DNMG110412-MP5	WPP10G	10	●	027	8115785	15,21
DNMG110412-MP5	WPP20G	10	●	027	8115786	15,21
DNMG110412-MP5	WPP30G	10	●	027	8115787	15,21
DNMG110412-MW5	WKK10S	10	●	027	7941515	16,97
DNMG110412-MW5	WKK20S	10	●	027	7941516	16,97
DNMG110412-MW5	WPP10G	10	●	027	8115824	17,46
DNMG110412-MW5	WPP20G	10	●	027	8115825	17,46
DNMG110412-RM5	WMP20S	10	●	027	6945430	14,78
DNMG110412-RM5	WSM20S	10	●	027	6945433	14,78
DNMG110412-RM5	WSM30S	10	■	027	6945434[1]	14,78
DNMG110412-RP5	WPP05G	10	●	027	8411465	15,21
DNMG110412-RP5	WPP05S	10	■	027	6613533[1]	15,21
DNMG110412-RP5	WPP10G	10	●	027	8115837	15,21
DNMG110412-RP5	WPP20G	10	●	027	8115838	15,21
DNMG110412-RP5	WPP30G	10	●	027	8115839	15,21
DNMG150404-FM5	WMP20S	10	●	027	7499334	17,83
DNMG150404-FM5	WSM10S	10	●	027	7091908	17,83

Bezeichnung / Designation	Sorte / Grade	VE / US		Disc. Gr.	Article No.	EURO Stück / piece
DNMG150404-FM5	WSM20S	10	●	027	7091909	17,83
DNMG150404-FP5	WEP10C	10	●	027	8136986	16,06
DNMG150404-FP5	WKP01G	10	●	027	8422881	18,38
DNMG150404-FP5	WPP10G	10	●	027	8115741	18,38
DNMG150404-FP5	WPP20G	10	●	027	8115742	18,38
DNMG150404-FP5	WPP20S	10	■	027	6065885[1]	18,38
DNMG150404-FW5	WPP10G	10	●	027	8115755	21,04
DNMG150404-FW5	WSM20S	10	●	027	7933339	20,44
DNMG150404-MM5	WMP20S	10	●	027	7376601	17,83
DNMG150404-MM5	WSM10S	10	●	027	7251940	17,83
DNMG150404-MM5	WSM20S	10	●	027	7251941	17,83
DNMG150404-MM5	WSM30S	10	●	027	7251942	17,83
DNMG150404-MP3	WPP10G	10	●	027	8115768	18,38
DNMG150404-MP3	WPP20G	10	●	027	8115769	18,38
DNMG150404-MP5	WPP10G	10	●	027	8115788	18,38
DNMG150404-MP5	WPP20G	10	●	027	8115789	18,38
DNMG150404-MP5	WPP30G	10	●	027	8115790	18,38
DNMG150404-MS3	WSM01	10	●	027	6890872	18,38
DNMG150404-MS3	WSM10S	10	●	027	6890824	17,83
DNMG150404-NFT	WSM20S	10	●	027	7053963	17,83
DNMG150404-NMS	WSM10S	10	●	027	7053846	17,83
DNMG150404-NMS	WSM20S	10	●	027	7053847	17,83
DNMG150408-FM5	WSM10S	10	●	027	7091910	17,83
DNMG150408-FM5	WSM20S	10	●	027	7091911	17,83
DNMG150408-FP5	WEP10C	10	●	027	8136987	16,06
DNMG150408-FP5	WKP01G	10	●	027	8422882	18,38
DNMG150408-FP5	WPP10G	10	●	027	8115743	18,38
DNMG150408-FP5	WPP20G	10	●	027	8115744	18,38
DNMG150408-FP5	WPP20S	10	■	027	6065887[1]	18,38
DNMG150408-FW5	WKP01G	10	●	027	8422885	21,04
DNMG150408-FW5	WPP10G	10	●	027	8115756	21,04
DNMG150408-FW5	WSM20S	10	●	027	7933341	20,44
DNMG150408-MK5	WKK10S	10	●	027	6351915	17,83
DNMG150408-MK5	WKK20S	10	●	027	6121585	17,83
DNMG150408-MM5	WMP20S	10	●	027	7376602	17,83
DNMG150408-MM5	WSM10S	10	●	027	7251943	17,83
DNMG150408-MM5	WSM20S	10	●	027	7251944	17,83
DNMG150408-MM5	WSM30S	10	●	027	7251945	17,83
DNMG150408-MP3	WPP05G	10	●	027	8411450	18,38
DNMG150408-MP3	WPP05S	10	■	027	6613408[1]	18,38
DNMG150408-MP3	WPP10G	10	●	027	8115770	18,38
DNMG150408-MP3	WPP10S	10	■	027	6064333[1]	18,38
DNMG150408-MP3	WPP20G	10	●	027	8115771	18,38
DNMG150408-MP3	WPP20S	10	■	027	6059697[1]	18,38
DNMG150408-MP3	WPP30G	10	●	027	8115772	18,38
DNMG150408-MP5	WPP05G	10	●	027	8411455	18,38
DNMG150408-MP5	WPP10G	10	●	027	8115791	18,38
DNMG150408-MP5	WPP10S	10	■	027	6178406[1]	18,38
DNMG150408-MP5	WPP20G	10	●	027	8115792	18,38
DNMG150408-MP5	WPP20S	10	■	027	6187990[1]	18,38
DNMG150408-MP5	WPP30G	10	●	027	8115793	18,38
DNMG150408-MS3	WSM01	10	●	027	6890874	18,38
DNMG150408-MS3	WSM10S	10	●	027	6890825	17,83
DNMG150408-MU5	WMP20S	10	●	027	7560038	17,83
DNMG150408-MU5	WPP05G	10	●	027	8411459	18,38
DNMG150408-MU5	WPP10G	10	●	027	8115812	18,38
DNMG150408-MU5	WPP20G	10	●	027	8115813	18,38
DNMG150408-MU5	WSM20S	10	●	027	7560039	17,83
DNMG150408-MW5	WKK10S	10	●	027	7941519	20,44
DNMG150408-MW5	WPP10G	10	●	027	8115826	21,04
DNMG150408-NMS	WSM01	10	●	027	6876742	18,38
DNMG150408-NMS	WSM10	10	●	027	5908087	17,83
DNMG150408-NMS	WSM10S	10	●	027	7053848	17,83
DNMG150408-NMS	WSM20S	10	●	027	7053849	17,83
DNMG150408-NMT	WS10	10	●	027	5924506	13,57
DNMG150408-NMT	WSM20S	10	●	027	7053979	17,83
DNMG150408-NRS	WSM10	10	●	027	5908285	17,83
DNMG150408-NRS	WSM10S	10	●	027	7053915	17,83
DNMG150408-NRS	WSM20S	10	●	027	7053916	17,83
DNMG150408-RM5	WMP20S	10	●	027	6944685	17,83

Bezeichnung / Designation	Sorte / Grade	VE / US		Disc. Gr.	Article No.	EURO Stück / piece
DNMG150408-RM5	WSM20S	10	●	027	6944742	17,83
DNMG150408-RM5	WSM30S	10	●	027	6944743	17,83
DNMG150408-RP5	WPP05G	10	●	027	8411466	18,38
DNMG150408-RP5	WPP05S	10	■	027	6613534[1]	18,38
DNMG150408-RP5	WPP10G	10	●	027	8115840	18,38
DNMG150408-RP5	WPP20G	10	●	027	8115841	18,38
DNMG150408-RP5	WPP30G	10	●	027	8115842	18,38
DNMG150412-FP5	WEP10C	10	●	027	8136988	16,06
DNMG150412-FP5	WPP10G	10	●	027	8115745	18,38
DNMG150412-FP5	WPP20G	10	●	027	8115746	18,38
DNMG150412-MK5	WKK10S	10	●	027	6351917	17,83
DNMG150412-MK5	WKK20S	10	●	027	6121609	17,83
DNMG150412-MM5	WSM20S	10	●	027	7251946	17,83
DNMG150412-MP3	WPP05G	10	●	027	8411451	18,38
DNMG150412-MP3	WPP05S	10	■	027	6613409[1]	18,38
DNMG150412-MP3	WPP10G	10	●	027	8115773	18,38
DNMG150412-MP3	WPP10S	10	■	027	6064334[1]	18,38
DNMG150412-MP3	WPP20G	10	●	027	8115774	18,38
DNMG150412-MP3	WPP20S	10	■	027	6064525[1]	18,38
DNMG150412-MP3	WPP30G	10	●	027	8115775	18,38
DNMG150412-MP5	WPP05G	10	●	027	8411456	18,38
DNMG150412-MP5	WPP05S	10	■	027	6613513[1]	18,38
DNMG150412-MP5	WPP10G	10	●	027	8115794	18,38
DNMG150412-MP5	WPP20G	10	●	027	8115795	18,38
DNMG150412-MP5	WPP30G	10	●	027	8115796	18,38
DNMG150412-MP5	WPP30S	10	■	027	6188004[1]	18,38
DNMG150412-MW5	WKK10S	10	●	027	7941521	20,44
DNMG150412-MW5	WPP10G	10	●	027	8115827	21,04
DNMG150412-RP5	WPP10G	10	●	027	8115843	18,38
DNMG150412-RP5	WPP20G	10	●	027	8115844	18,38
DNMG150412-RP5	WPP30G	10	●	027	8115845	18,38
DNMG150412-RP5	WPP30S	10	■	027	6114382[1]	18,38
DNMG150602-FM5	WSM10S	10	●	027	7091912	19,52
DNMG150602-FM5	WSM20S	10	●	027	7091913	19,52
DNMG150604-FM5	WMP20S	10	●	027	7091914	19,52
DNMG150604-FM5	WSM01	10	●	027	8461482	20,11
DNMG150604-FM5	WSM10S	10	●	027	7091915	19,52
DNMG150604-FM5	WSM20S	10	●	027	7091916	19,52
DNMG150604-FP5	WEP10C	10	●	027	8136989	17,58
DNMG150604-FP5	WKP01G	10	●	027	8422889	20,11
DNMG150604-FP5	WPP10G	10	●	027	8115747	20,11
DNMG150604-FP5	WPP10S	10	■	027	6057719[1]	20,11
DNMG150604-FP5	WPP20G	10	●	027	8115748	20,11
DNMG150604-FP5	WPP20S	10	■	027	6065902[1]	20,11
DNMG150604-FW5	WKP01G	10	●	027	8422886	23,03
DNMG150604-FW5	WPP10G	10	●	027	8115757	23,03
DNMG150604-FW5	WPP20G	10	●	027	8115758	23,03
DNMG150604-FW5	WSM10S	10	●	027	7933345	22,35
DNMG150604-FW5	WSM20S	10	●	027	7933344	22,35
DNMG150604-MM5	WMP20S	10	●	027	7376603	19,52
DNMG150604-MM5	WSM10S	10	●	027	7251947	19,52
DNMG150604-MM5	WSM20S	10	●	027	7251948	19,52
DNMG150604-MM5	WSM30S	10	●	027	7251949	19,52
DNMG150604-MP3	WPP10G	10	●	027	8115776	20,11
DNMG150604-MP3	WPP20G	10	●	027	8115777	20,11
DNMG150604-MP3	WPP20S	10	■	027	6059698[1]	20,11
DNMG150604-MP3	WPP30G	10	●	027	8115778	20,11
DNMG150604-MP5	WPP10G	10	●	027	8115797	20,11
DNMG150604-MP5	WPP20G	10	●	027	8115798	20,11
DNMG150604-MP5	WPP20S	10	■	027	6187821[1]	20,11
DNMG150604-MP5	WPP30G	10	●	027	8115799	20,11
DNMG150604-MS3	WSM01	10	●	027	6890873	20,09
DNMG150604-MS3	WSM10S	10	●	027	7469064	19,52
DNMG150604-NFT	WSM20S	10	●	027	7053964	19,52
DNMG150604-NMS	WSM01	10	●	027	7469072	20,09
DNMG150604-NMS	WSM10S	10	●	027	7053850	19,52
DNMG150604-NMS	WSM20S	10	●	027	7053851	19,52
DNMG150608-FM5	WMP20S	10	●	027	7091917	19,52
DNMG150608-FM5	WSM01	10	●	027	8461483	20,11
DNMG150608-FM5	WSM10S	10	●	027	7091918	19,52

Bezeichnung / Designation	Sorte / Grade	VE / US		Disc. Gr.	Article No.	EURO Stück / piece
DNMG150608-FM5	WSM20S	10	●	027	7091919	19,52
DNMG150608-FP5	WEP10C	10	●	027	8136990	17,58
DNMG150608-FP5	WKP01G	10	●	027	8422890	20,11
DNMG150608-FP5	WPP10G	10	●	027	8115551	20,11
DNMG150608-FP5	WPP10S	10	●	027	6057790[2]	20,11
DNMG150608-FP5	WPP20G	10	●	027	8115552	20,11
DNMG150608-FP5	WPP20S	10	■	027	6065903[1]	20,11
DNMG150608-FW5	WKP01G	10	●	027	8422887	23,03
DNMG150608-FW5	WPP10G	10	●	027	8115759	23,03
DNMG150608-FW5	WPP10S	10	■	027	7933346[1]	23,03
DNMG150608-FW5	WPP20G	10	●	027	8115760	23,03
DNMG150608-FW5	WSM10S	10	●	027	7933349	22,35
DNMG150608-FW5	WSM20S	10	●	027	7933348	22,35
DNMG150608-MK5	WKK10S	10	●	027	6353301	19,52
DNMG150608-MK5	WKK20S	10	●	027	6121044	19,52
DNMG150608-MM5	WMP20S	10	●	027	7376604	19,52
DNMG150608-MM5	WSM10S	10	●	027	7251950	19,52
DNMG150608-MM5	WSM20S	10	●	027	7251951	19,52
DNMG150608-MM5	WSM30S	10	●	027	7251952	19,52
DNMG150608-MP3	WPP05G	10	●	027	8411452	20,11
DNMG150608-MP3	WPP05S	10	■	027	6613450[1]	20,11
DNMG150608-MP3	WPP10G	10	●	027	8115560	20,11
DNMG150608-MP3	WPP10S	10	■	027	6059693[1]	20,11
DNMG150608-MP3	WPP20G	10	●	027	8115561	20,11
DNMG150608-MP3	WPP20S	10	■	027	6059699[1]	20,11
DNMG150608-MP3	WPP30G	10	●	027	8115562	20,11
DNMG150608-MP5	WPP05G	10	●	027	8411457	20,11
DNMG150608-MP5	WPP05S	10	■	027	6613514[1]	20,11
DNMG150608-MP5	WPP10G	10	●	027	8115800	20,11
DNMG150608-MP5	WPP10S	10	●	027	6059760[2]	20,11
DNMG150608-MP5	WPP20G	10	●	027	8115801	20,11
DNMG150608-MP5	WPP20S	10	■	027	6059761[1]	20,11
DNMG150608-MP5	WPP30G	10	●	027	8115802	20,11
DNMG150608-MP5	WPP30S	10	■	027	6059766[1]	20,11
DNMG150608-MS3	WMP20S	10	●	027	7903824	19,52
DNMG150608-MS3	WPP20G	10	●	027	8115809	20,11
DNMG150608-MS3	WSM01	10	●	027	6890875	20,09
DNMG150608-MS3	WSM10S	10	●	027	7469065	19,52
DNMG150608-MU5	WMP20S	10	●	027	7560042	19,52
DNMG150608-MU5	WPP05G	10	●	027	8411460	20,11
DNMG150608-MU5	WPP05S	10	■	027	7640087[1]	20,11
DNMG150608-MU5	WPP10G	10	●	027	8115815	20,11
DNMG150608-MU5	WPP20G	10	●	027	8115816	20,11
DNMG150608-MU5	WPP20S	10	■	027	7560041[1]	20,11
DNMG150608-MU5	WSM20S	10	●	027	7560043	19,52
DNMG150608-MW5	WKK10S	10	●	027	7941523	22,35
DNMG150608-MW5	WKK20S	10	●	027	7941524	22,35
DNMG150608-MW5	WPP05G	10	●	027	8411463	23,03
DNMG150608-MW5	WPP05S	10	■	027	7941525[1]	23,03
DNMG150608-MW5	WPP10G	10	●	027	8115829	23,03
DNMG150608-MW5	WPP10S	10	■	027	7941526[1]	23,03
DNMG150608-MW5	WPP20G	10	●	027	8115830	23,03
DNMG150608-NF	WPP01	10	■	027	5262888[1]	23,03
DNMG150608-NFT	WS10	10	●	027	5566085	14,84
DNMG150608-NFT	WSM20S	10	●	027	7053965	19,52
DNMG150608-NM4	WPP20	10	■	027	5092413[1]	20,11
DNMG150608-NM4	WPP20G	10	●	027	8369452[1]	20,11
DNMG150608-NM4	WSM10	10	●	027	5847172	19,52
DNMG150608-NMS	WSM01	10	●	027	7469073	20,09
DNMG150608-NMS	WSM10S	10	●	027	7053852	19,52
DNMG150608-NMS	WSM20S	10	●	027	7053853	19,52
DNMG150608-NMS	WSM30S	10	●	027	7053854	19,52
DNMG150608-NMT	WS10	10	●	027	5566087	14,84
DNMG150608-NMT	WSM20S	10	●	027	7054011	19,52
DNMG150608-NRS	WMP20S	10	●	027	7469080	19,52
DNMG150608-NRS	WSM10S	10	●	027	7053917	19,52
DNMG150608-NRS	WSM20S	10	●	027	7053918	19,52
DNMG150608-NS6	WPP10	10	■	027	5093219[1]	20,11
DNMG150608-NS6	WPP10G	10	●	027	8369455[1]	20,11
DNMG150608-NS6	WPP20	10	■	027	5093220[1]	20,11

Bezeichnung / Designation	Sorte / Grade	VE / US		Disc. Gr.	Article No.	EURO Stück / piece
DNMG150608-NS6	WPP20G	10	●	027	8369456[1]	20,11
DNMG150608-RM5	WMP20S	10	●	027	6944686	19,52
DNMG150608-RM5	WSM10S	10	●	027	6944744	19,52
DNMG150608-RM5	WSM20S	10	●	027	6944745	19,52
DNMG150608-RM5	WSM30S	10	●	027	6944746	19,52
DNMG150608-RP5	WKK20S	10	●	027	6342041	19,52
DNMG150608-RP5	WPP05G	10	●	027	8411467	20,11
DNMG150608-RP5	WPP05S	10	●	027	6613535[1]	20,11
DNMG150608-RP5	WPP10G	10	●	027	8115846	20,11
DNMG150608-RP5	WPP10S	10	■	027	6113820[1]	20,11
DNMG150608-RP5	WPP20G	10	●	027	8115847	20,11
DNMG150608-RP5	WPP20S	10	■	027	6064491[1]	20,11
DNMG150608-RP5	WPP30G	10	●	027	8115848	20,11
DNMG150608-RP5	WPP30S	10	■	027	6114384[1]	20,11
DNMG150612-FP5	WEP10C	10	●	027	8136991	17,58
DNMG150612-FP5	WKP01G	10	●	027	8422891	20,11
DNMG150612-FP5	WPP10G	10	●	027	8115749	20,11
DNMG150612-FP5	WPP10S	10	■	027	6057796[1]	20,11
DNMG150612-FP5	WPP20G	10	●	027	8115750	20,11
DNMG150612-MK5	WKK10S	10	●	027	6353302	19,52
DNMG150612-MK5	WKK20S	10	●	027	6121084	19,52
DNMG150612-MM5	WMP20S	10	●	027	7376605	19,52
DNMG150612-MM5	WSM10S	10	●	027	7251953	19,52
DNMG150612-MM5	WSM20S	10	●	027	7251954	19,52
DNMG150612-MM5	WSM30S	10	●	027	7251955	19,52
DNMG150612-MP3	WPP05G	10	●	027	8411453	20,11
DNMG150612-MP3	WPP05S	10	■	027	6613451[1]	20,11
DNMG150612-MP3	WPP10G	10	●	027	8115563	20,11
DNMG150612-MP3	WPP10S	10	■	027	6064336[1]	20,11
DNMG150612-MP3	WPP20G	10	●	027	8115564	20,11
DNMG150612-MP5	WPP05G	10	●	027	8411458	20,11
DNMG150612-MP5	WPP05S	10	■	027	6613515[1]	20,11
DNMG150612-MP5	WPP10G	10	●	027	8115803	20,11
DNMG150612-MP5	WPP10S	10	■	027	6067103[1]	20,11
DNMG150612-MP5	WPP20G	10	●	027	8115804	20,11
DNMG150612-MP5	WPP20S	10	■	027	6067096[1]	20,11
DNMG150612-MP5	WPP30G	10	●	027	8115805	20,11
DNMG150612-MP5	WPP30S	10	■	027	6067105[1]	20,11
DNMG150612-MU5	WMP20S	10	●	027	7560046	19,52
DNMG150612-MU5	WPP05G	10	●	027	8411461	20,11
DNMG150612-MU5	WPP05S	10	■	027	7640088[1]	20,11
DNMG150612-MU5	WPP10G	10	●	027	8115818	20,11
DNMG150612-MU5	WPP20G	10	●	027	8115819	20,11
DNMG150612-MU5	WSM20S	10	●	027	7560047	19,52
DNMG150612-MW5	WKK10S	10	●	027	7941528	22,35
DNMG150612-MW5	WKK20S	10	●	027	7941529	22,35
DNMG150612-MW5	WPP05G	10	●	027	8411464	23,03
DNMG150612-MW5	WPP05S	10	■	027	7941530[1]	23,03
DNMG150612-MW5	WPP10G	10	●	027	8115832	23,03
DNMG150612-MW5	WPP20G	10	●	027	8115833	23,03
DNMG150612-NM	WPP05S	10	■	027	6780219[1]	23,03
DNMG150612-NMT	WS10	10	●	027	5638369	14,84
DNMG150612-NRS	WSM10S	10	●	027	7053919	19,52
DNMG150612-NRS	WSM20S	10	●	027	7053920	19,52
DNMG150612-NS6	WPP20	10	■	027	5093222[1]	20,11
DNMG150612-NS6	WPP20G	10	●	027	8369457[1]	20,11
DNMG150612-RM5	WMP20S	10	●	027	6944687	19,52
DNMG150612-RM5	WSM20S	10	●	027	6944747	19,52
DNMG150612-RM5	WSM30S	10	●	027	6944748	19,52
DNMG150612-RP5	WKK20S	10	●	027	6318230	19,52
DNMG150612-RP5	WPP05G	10	●	027	8411468	20,11
DNMG150612-RP5	WPP05S	10	■	027	6613536[1]	20,11
DNMG150612-RP5	WPP10G	10	●	027	8115849	20,11
DNMG150612-RP5	WPP10S	10	●	027	6059564[2]	20,11
DNMG150612-RP5	WPP20G	10	●	027	8115850	20,11
DNMG150612-RP5	WPP20S	10	■	027	6059568[1]	20,11
DNMG150612-RP5	WPP30G	10	●	027	8115851	20,11
DNMG150616-MK5	WKK10S	10	●	027	6356453	19,52
DNMG150616-MP5	WPP10G	10	●	027	8115806	20,11
DNMG150616-MP5	WPP20G	10	●	027	8115807	20,11

Bezeichnung / Designation	Sorte / Grade	VE / US		Disc. Gr.	Article No.	EURO Stück / piece
DNMG150616-MU5	WMP20S	10	●	027	7560050	19,52
DNMG150616-MU5	WPP10G	10	●	027	8115820	20,11
DNMG150616-MU5	WPP20G	10	●	027	8115821	20,11
DNMG150616-MU5	WPP20S	10	■	027	7560049[1]	20,11
DNMG150616-MU5	WSM20S	10	●	027	7560051	19,52
DNMG150616-RP5	WPP05G	10	●	027	8411469	20,11
DNMG150616-RP5	WPP05S	10	■	027	6613537[1]	20,11
DNMG150616-RP5	WPP10G	10	●	027	8115852	20,11
DNMG150616-RP5	WPP10S	10	■	027	6113821[1]	20,11
DNMG150616-RP5	WPP20G	10	●	027	8115853	20,11
DNMG150616-RP5	WPP20S	10	■	027	6064684[1]	20,11
DNMG150616-RP5	WPP30G	10	●	027	8115854	20,11
DNMM150608-HU3	WPP10G	10	●	027	8138369	20,11
DNMM150608-HU3	WPP20G	10	●	027	8138368	20,11
DNMM150608-HU3	WPP30G	10	●	027	8138370	20,11
DNMM150608-HU5	WMP20S	10	●	027	7583851	19,52
DNMM150608-HU5	WPP20G	10	●	027	8116194	20,11
DNMM150608-HU5	WSM20S	10	●	027	7583796	19,52
DNMM150608-HU5	WSM30S	10	■	027	7583797[1]	19,52
DNMM150612-HU3	WPP10G	10	●	027	8138372	20,11
DNMM150612-HU3	WPP20G	10	●	027	8138371	20,11
DNMM150612-HU3	WPP30G	10	●	027	8138373	20,11
DNMM150612-HU5	WMP20S	10	●	027	7583853	19,52
DNMM150612-HU5	WPP20G	10	●	027	8116195	20,11
DNMM150612-HU5	WSM20S	10	●	027	7583798	19,52
DNMM150612-HU5	WSM30S	10	■	027	7583799[1]	19,52
DNMM150616-HU3	WPP05G	10	●	027	8411470	20,11
DNMM150616-HU3	WPP10G	10	●	027	8138374	20,11
DNMM150616-HU3	WPP20G	10	●	027	8138375	20,11
DNMM150616-NRF	WPP05S	10	■	027	6613555[1]	20,11
DPGT11T304-MM4	WSM01	10	●	029	7021260	20,65
DPGT11T304-MM4	WSM20S	10	●	029	6844693	20,03
DPGT11T304-MP4	WPP20G	10	●	029	8204661	20,64
DPGT11T308-MM4	WSM01	10	●	029	7021261	20,65
DPGT11T308-MM4	WSM20S	10	●	029	6844694	20,03
DPGW070204FS-1	WDN10	2	●	025	7132609	62,30
DPGW11T304FS-1	WDN10	2	●	025	7132680	71,70
DPGW11T308FS-1	WDN10	2	●	025	7132681	71,70
DPMT070204-FM4	WMP20S	10	●	029	7021360	9,67
DPMT070204-FM4	WSM20S	10	●	029	7021359	9,67
DPMT070204-FP4	WPP10G	10	●	029	8204662	9,96
DPMT070204-MM4	WSM20S	10	●	029	6837326	9,67
DPMT070204-MP4	WPP20G	10	●	029	8204663	9,96
DPMT11T304-FM4	WMP20S	10	●	029	7021362	13,51
DPMT11T304-FM4	WSM20S	10	●	029	7021361	13,51
DPMT11T304-FP4	WPP10G	10	●	029	8204664	13,90
DPMT11T304-MM4	WSM20S	10	●	029	6837327	13,51
DPMT11T304-MP4	WPP20G	10	●	029	8204665	13,90
DPMT11T308-FM4	WMP20S	10	●	029	7021364	13,51
DPMT11T308-FP4	WPP10G	10	●	029	8204666	13,90
DPMT11T308-MP4	WPP20G	10	●	029	8204667	13,90
DPMW11T308-RK6	WKK20S	10	●	029	7021365	13,51
DSBNL2525M12		1	●	060	5042214	105,00
DSBNL2525X12-P		1	●	060	6824250	255,00
DSBNL3225P12		1	●	060	5042216	116,00
DSBNL3232P15		1	●	060	5042218	141,00
DSBNL3232P19		1	●	060	5042220	141,00
DSBNL4040S19		1	●	060	5105525	188,00
DSBNR2525M12		1	●	060	5042215	105,00
DSBNR2525X12-P		1	●	060	6824251	255,00
DSBNR3225P12		1	●	060	5042217	116,00
DSBNR3232P15		1	●	060	5042219	141,00
DSBNR3232P19		1	●	060	5042221	141,00
DSBNR4040S19		1	●	060	5101477	188,00
DSDNN103A		1	●	060	6349850	86,60
DSDNN2020K12		1	●	060	5204615	99,30
DSDNN205D		1	●	060	6349851	141,00
DSDNN2525M12		1	●	060	5204616	105,00
DSDNN2525M15		1	●	060	5204618	105,00
DSDNN3225P12		1	●	060	5204617	116,00

Bezeichnung / Designation	Sorte / Grade	VE / US		Disc. Gr.	Article No.	EURO Stück / piece
DSDNN3225P19		1	●	060	5204619	116,00
DSKNL2525M12		1	●	060	5042564	105,00
DSKNL3232P15		1	●	060	5204630	141,00
DSKNR2525M12		1	●	060	5042222	105,00
DSKNR3232P15		1	●	060	5204631	141,00
DSSNL2020K12		1	●	060	5042223	99,30
DSSNL2525M12		1	●	060	5042225	105,00
DSSNL2525M15		1	●	060	5042227	105,00
DSSNL2525X12-P		1	●	060	7031634	255,00
DSSNL3225P12		1	●	060	5042229	116,00
DSSNL3225P15		1	●	060	5042231	116,00
DSSNL3232P15		1	●	060	5042233	141,00
DSSNL3232P19		1	●	060	5042235	141,00
DSSNR2020K12		1	●	060	5042224	99,30
DSSNR2525M12		1	●	060	5042226	105,00
DSSNR2525M15		1	●	060	5042228	105,00
DSSNR2525X12-P		1	●	060	7031635	255,00
DSSNR3225P12		1	●	060	5042230	116,00
DSSNR3225P15		1	●	060	5042232	116,00
DSSNR3232P15		1	●	060	5042234	141,00
DSSNR3232P19		1	●	060	5042236	141,00
DTGNL2020K16		1	●	060	5204632	99,30
DTGNL2020X16-P		1	●	060	6824252	242,00
DTGNL2525M16		1	●	060	5204634	105,00
DTGNL2525M22		1	●	060	5204638	105,00
DTGNL2525X16-P		1	●	060	6824254	255,00
DTGNL3225P16		1	●	060	5204636	116,00
DTGNR2020K16		1	●	060	5204633	99,30
DTGNR2020X16-P		1	●	060	6824253	242,00
DTGNR2525M16		1	●	060	5204635	105,00
DTGNR2525M22		1	●	060	5204639	105,00
DTGNR2525X16-P		1	●	060	6824255	255,00
DTGNR3225P16		1	●	060	5204637	116,00
DTJNL205D		1	●	060	6349852	141,00
DTJNR205D		1	●	060	6349853	141,00
DVJBL2020X16-P		1	●	060	7031669	289,00
DVJBL2525X16-P		1	●	060	7031671	307,00
DVJBR2020X16-P		1	●	060	7031670	289,00
DVJBR2525X16-P		1	●	060	7031672	307,00
DVJNL123B-P		1	●	060	7031698	289,00
DVJNL163D-P		1	●	060	7031720	307,00
DVJNL2020K16		1	●	060	5042251	118,00
DVJNL2020X16-P		1	●	060	7031665	289,00
DVJNL2525M16		1	●	060	5042253	126,00
DVJNL2525X16-P		1	●	060	7031667	307,00
DVJNL3225P16		1	●	060	5042255	139,00
DVJNR123B-P		1	●	060	7031699	289,00
DVJNR163D		1	●	060	5097589	126,00
DVJNR163D-P		1	●	060	7031721	307,00
DVJNR2020K16		1	●	060	5042252	118,00
DVJNR2020X16-P		1	●	060	7031666	289,00
DVJNR2525M16		1	●	060	5042254	126,00
DVJNR2525X16-P		1	●	060	7031668	307,00
DVJNR3225P16		1	●	060	5042256	139,00
DVPNL2525M16		1	●	060	6344468	126,00
DVPNL3225P16		1	●	060	6344630	139,00
DVPNR2525M16		1	●	060	6344469	126,00
DVPNR3225P16		1	●	060	6344632	139,00
DVTNL123B		1	○	060	7394639*	120,00
DVTNL163D		1	●	060	6349854	126,00
DVTNL203D		1	●	060	6349856	171,00
DVTNR123B		1	●	060	7394680	120,00
DVTNR163D		1	●	060	6349855	126,00
DVTNR203D		1	●	060	6349857	171,00
DVVNN2020K16		1	●	060	5673897	118,00
DVVNN2525M16		1	●	060	5673898	126,00
DVVNN3225P16		1	●	060	5673899	139,00
DWLNL124B-P		1	●	060	7031722	242,00
DWLNL1616H06		1	●	060	6047420	89,10
DWLNL164D-P		1	●	060	6824285	255,00

Bezeichnung / Designation	Sorte / Grade	VE / US		Disc. Gr.	Article No.	EURO Stück / piece
DWLNL2020K06		1	●	060	5042202	99,30
DWLNL2020K08		1	●	060	5042204	99,30
DWLNL2020X08-P		1	●	060	6824281	242,00
DWLNL2525M06		1	●	060	5042206	105,00
DWLNL2525M08		1	●	060	5042208	105,00
DWLNL2525M10		1	●	060	5043247	105,00
DWLNL2525X08-P		1	●	060	6824283	255,00
DWLNL3225P08		1	●	060	5042212	116,00
DWLNL3225P10		1	●	060	5043249	116,00
DWLNL3232P10		1	●	060	5043251	141,00
DWLNR124B-P		1	●	060	7031723	242,00
DWLNR1616H06		1	●	060	6047422	89,10
DWLNR164D-P		1	●	060	6824286	255,00
DWLNR2020K06		1	●	060	5042203	99,30
DWLNR2020K08		1	●	060	5042205	99,30
DWLNR2020X08-P		1	●	060	6824282	242,00
DWLNR2525M06		1	●	060	5042207	105,00
DWLNR2525M08		1	●	060	5042209	105,00
DWLNR2525M10		1	●	060	5043248	105,00
DWLNR2525X08-P		1	●	060	6824284	255,00
DWLNR3225P08		1	●	060	5042213	116,00
DWLNR3225P10		1	●	060	5043250	116,00
DWLNR3232P10		1	●	060	5043252	141,00
DX18-1E100N01-CF5	WSM33G	10	●	020	8492958	23,75
DX18-1E100N01-CF5	WSM33S	10	●	020	8035914	23,19
DX18-1E100N01-CF6	WSM33G	10	●	020	8492963	23,75
DX18-1E100N01-CF6	WSM33S	10	●	020	8035913	23,19
DX18-1E120N01-CE4	WSM33G	10	●	020	8492954	23,75
DX18-1E120N01-CE4	WSM33S	10	●	020	8035915	23,19
DX18-1E150L10-CF5	WSM33G	10	●	020	8492941	26,10
DX18-1E150L10-CF5	WSM33S	10	●	020	7910422	25,50
DX18-1E150L10-CF6	WSM33G	10	●	020	8492949	26,10
DX18-1E150L10-CF6	WSM33S	10	●	020	7910425	25,50
DX18-1E150N01-CE4	WSM33G	10	●	020	8492955	23,75
DX18-1E150N01-CE4	WSM33S	10	●	020	7795850	23,19
DX18-1E150N01-CE4	WSM43S	10	●	020	7795729	23,19
DX18-1E150N01-CF5	WSM23S	10	●	020	7795874	23,19
DX18-1E150N01-CF5	WSM33G	10	●	020	8492959	23,75
DX18-1E150N01-CF5	WSM33S	10	●	020	7795873	23,19
DX18-1E150N01-CF5	WSM43S	10	●	020	7795872	23,19
DX18-1E150N01-CF6	WSM33G	10	●	020	8485140	23,75
DX18-1E150N01-CF6	WSM33S	10	●	020	7795899	23,19
DX18-1E150N01-CF6	WSM43S	10	●	020	7795898	23,19
DX18-1E150N01-CK8	WN13	10	●	020	8035916	22,62
DX18-1E150R10-CF5	WSM33G	10	●	020	8492994	26,10
DX18-1E150R10-CF5	WSM33S	10	●	020	7910427	25,50
DX18-1E150R10-CF6	WSM33G	10	●	020	8493002	26,10
DX18-1E150R10-CF6	WSM33S	10	●	020	7910430	25,50
DX18-1E160N01-UF8	WSM23S	10	●	020	8035917	30,20
DX18-1E170N01-UF8	WSM23S	10	●	020	8035918	30,20
DX18-1E185N01-UF8	WSM23S	10	●	020	8039193	30,20
DX18-1E196N01-UF8	WSM23S	10	●	020	8039194	30,20
DX18-2E200L15-CF5	WSM33G	10	●	020	8492942	26,20
DX18-2E200L15-CF5	WSM33S	10	●	020	7795875	25,50
DX18-2E200L15-CF6	WSM33G	10	●	020	8492950	26,10
DX18-2E200L15-CF6	WSM33S	10	●	020	7910426	25,50
DX18-2E200L6-CE4	WSM33G	10	●	020	8492928	23,76
DX18-2E200L6-CE4	WSM33S	10	●	020	7795860	23,19
DX18-2E200L6-CE4	WSM43S	10	●	020	7795861	23,19
DX18-2E200L6-CF5	WSM33G	10	●	020	8492943	23,76
DX18-2E200L6-CF5	WSM33S	10	●	020	7795884	23,19
DX18-2E200L6-CF5	WSM43S	10	●	020	7795885	23,19
DX18-2E200L6-CF6	WSM33G	10	●	020	8492951	23,76
DX18-2E200L6-CF6	WSM33S	10	●	020	7795906	23,19
DX18-2E200L6-CF6	WSM43S	10	●	020	7795907	23,19
DX18-2E200L7-CF5	WSM23S	10	●	020	7795887	25,50
DX18-2E200L7-CF5	WSM33G	10	●	020	8492944	26,10
DX18-2E200L7-CF5	WSM33S	10	●	020	7795886	25,50
DX18-2E200L7-CK8	WN13	10	●	020	8039191	22,62
DX18-2E200N00-CF5	WSM33G	10	●	020	8492960	26,20

Bezeichnung / Designation	Sorte / Grade	VE / US		Disc. Gr.	Article No.	EURO Stück / piece
DX18-2E200N00-CF5	WSM33S	10	●	020	7795876	25,50
DX18-2E200N02-CE4	WKP23S	10	●	020	7795854	23,19
DX18-2E200N02-CE4	WSM23S	10	●	020	7795853	23,19
DX18-2E200N02-CE4	WSM33G	10	●	020	8492956	23,76
DX18-2E200N02-CE4	WSM33S	10	●	020	7795851	23,19
DX18-2E200N02-CE4	WSM43S	10	●	020	7795852	23,19
DX18-2E200N02-CF5	WSM23S	10	●	020	7782838	23,19
DX18-2E200N02-CF5	WSM33G	10	●	020	8485141	23,76
DX18-2E200N02-CF5	WSM33S	10	●	020	7782837	23,19
DX18-2E200N02-CF5	WSM43S	10	●	020	7782839	23,19
DX18-2E200N02-CF6	WSM33G	10	●	020	8492964	23,76
DX18-2E200N02-CF6	WSM33S	10	●	020	7795900	23,19
DX18-2E200N02-CF6	WSM43S	10	●	020	7795901	23,19
DX18-2E200N02-CK8	WN13	10	●	020	8039190	22,62
DX18-2E200N02-GD3	WKP23S	10	●	020	7910377	23,19
DX18-2E200N02-GD3	WSM33G	10	●	020	8492967	23,76
DX18-2E200N02-GD3	WSM33S	10	●	020	7910376	23,19
DX18-2E200N02-GD6	WSM23S	10	●	020	7795915	23,19
DX18-2E200N02-GD6	WSM33G	10	●	020	8492971	23,76
DX18-2E200N02-GD6	WSM33S	10	●	020	7795914	23,19
DX18-2E200N02-UA4	WKP13S	10	●	020	7910438	23,19
DX18-2E200N02-UD4	WKP23S	10	●	020	7910439	23,19
DX18-2E200N02-UD4	WSM33G	10	●	020	8492978	23,76
DX18-2E200N02-UD4	WSM33S	10	●	020	7910440	23,19
DX18-2E200N02-UF4	WKP23S	10	●	020	7910444	23,19
DX18-2E200N02-UF4	WSM23S	10	●	020	7910445	23,19
DX18-2E200N02-UF4	WSM33G	10	●	020	8492982	23,76
DX18-2E200N02-UF4	WSM33S	10	●	020	7910443	23,19
DX18-2E200N02-UF4	WSM43S	10	●	020	7910446	23,19
DX18-2E200N02-UF7	WSM23S	10	●	020	8035919	23,19
DX18-2E200N02-UF7	WSM33G	10	●	020	8492989	23,75
DX18-2E200N02-UF7	WSM33S	10	●	020	8035920	23,19
DX18-2E200N10-RD4	WKP23S	10	●	020	7910433	23,19
DX18-2E200N10-RD4	WSM23S	10	●	020	8192037	23,19
DX18-2E200N10-RD4	WSM33G	10	●	020	8492975	23,76
DX18-2E200N10-RD4	WSM33S	10	●	020	7910432	23,19
DX18-2E200N10-RF7	WSM13S	10	●	020	7910571	23,19
DX18-2E200N10-RF7	WSM23S	10	●	020	7910572	23,19
DX18-2E200R15-CF5	WSM33G	10	●	020	8492995	26,20
DX18-2E200R15-CF5	WSM33S	10	●	020	7795880	25,50
DX18-2E200R15-CF6	WSM33G	10	●	020	8493003	26,20
DX18-2E200R15-CF6	WSM33S	10	●	020	7910431	25,50
DX18-2E200R6-CE4	WSM33G	10	●	020	8492991	23,76
DX18-2E200R6-CE4	WSM33S	10	●	020	7795862	23,19
DX18-2E200R6-CE4	WSM43S	10	●	020	7795863	23,19
DX18-2E200R6-CF5	WSM33G	10	●	020	8492996	23,76
DX18-2E200R6-CF5	WSM33S	10	●	020	7795889	23,19
DX18-2E200R6-CF5	WSM43S	10	●	020	7795888	23,19
DX18-2E200R6-CF6	WSM33G	10	●	020	8493004	23,76
DX18-2E200R6-CF6	WSM33S	10	●	020	7795908	23,19
DX18-2E200R6-CF6	WSM43S	10	●	020	7795909	23,19
DX18-2E200R7-CF5	WSM23S	10	●	020	7795891	25,50
DX18-2E200R7-CF5	WSM33G	10	●	020	8492997	26,10
DX18-2E200R7-CF5	WSM33S	10	●	020	7795890	25,50
DX18-2E200R7-CK8	WN13	10	●	020	8039192	22,62
DX18-2E225N01-UF8	WSM23S	10	●	020	8039195	30,20
DX18-2E239N02-UF4	WSM33G	10	●	020	8492983	23,76
DX18-2E239N12-RD4	WSM33G	10	●	020	8492976	23,76
DX18-2E239N12-RD4	WSM33S	10	●	020	8192038	23,19
DX18-2E250L6-CE4	WSM33G	10	●	020	8492929	23,75
DX18-2E250L6-CE4	WSM33S	10	●	020	7795864	23,19
DX18-2E250L6-CF5	WSM33G	10	●	020	8492945	23,75
DX18-2E250L6-CF5	WSM33S	10	●	020	7795892	23,19
DX18-2E250L6-CF6	WSM33G	10	●	020	8492952	23,75
DX18-2E250L6-CF6	WSM33S	10	●	020	7795910	23,19
DX18-2E250N02-CE4	WKP23S	10	●	020	7782850	23,19
DX18-2E250N02-CE4	WSM33G	10	●	020	8492957	23,76
DX18-2E250N02-CE4	WSM33S	10	●	020	7795855	23,19
DX18-2E250N02-CE4	WSM43S	10	●	020	7795857	23,19
DX18-2E250N02-CF5	WSM33G	10	●	020	8492961	23,76

Bezeichnung / Designation	Sorte / Grade	VE / US		Disc. Gr.	Article No.	EURO Stück / piece
DX18-2E250N02-CF5	WSM33S	10	●	020	7795881	23,19
DX18-2E250N02-CF5	WSM43S	10	●	020	7795882	23,19
DX18-2E250N02-CF6	WSM33G	10	●	020	8492965	23,76
DX18-2E250N02-CF6	WSM33S	10	●	020	7795902	23,19
DX18-2E250N02-CF6	WSM43S	10	●	020	7795903	23,19
DX18-2E250N02-GD3	WKP23S	10	●	020	7910378	23,19
DX18-2E250N02-GD3	WSM33G	10	●	020	8492968	23,76
DX18-2E250N02-GD3	WSM33S	10	●	020	7910379	23,19
DX18-2E250N02-GD6	WSM23S	10	●	020	7795916	23,19
DX18-2E250N02-GD6	WSM33G	10	●	020	8492972	23,76
DX18-2E250N02-GD6	WSM33S	10	●	020	7795917	23,19
DX18-2E250N02-UF4	WKP23S	10	●	020	7910448	23,19
DX18-2E250N02-UF4	WSM23S	10	●	020	7910449	23,19
DX18-2E250N02-UF4	WSM33G	10	●	020	8492984	23,76
DX18-2E250N02-UF4	WSM33S	10	●	020	7910447	23,19
DX18-2E250R6-CE4	WSM33G	10	●	020	8492992	23,76
DX18-2E250R6-CE4	WSM33S	10	●	020	7795865	23,19
DX18-2E250R6-CF5	WSM33G	10	●	020	8492998	23,76
DX18-2E250R6-CF5	WSM33S	10	●	020	7795893	23,19
DX18-2E250R6-CF6	WSM33G	10	●	020	8493005	23,76
DX18-2E250R6-CF6	WSM33S	10	●	020	7795911	23,19
DX18-2E275N01-UF8	WSM23S	10	●	020	8039196	30,20
DX18-3E300L15-CF5	WSM33G	10	●	020	8492946	26,10
DX18-3E300L15-CF5	WSM33S	10	●	020	7910423	25,50
DX18-3E300L6-CE4	WSM33G	10	●	020	8492940	23,76
DX18-3E300L6-CE4	WSM33S	10	●	020	7795866	23,19
DX18-3E300L6-CE4	WSM43S	10	●	020	7795867	23,19
DX18-3E300L6-CF5	WSM33G	10	●	020	8492947	23,75
DX18-3E300L6-CF5	WSM33S	10	●	020	7795894	23,19
DX18-3E300L6-CF6	WSM33G	10	●	020	8492953	23,75
DX18-3E300L6-CF6	WSM33S	10	●	020	7795904	23,19
DX18-3E300L7-CF5	WSM33G	10	●	020	8492948	26,10
DX18-3E300L7-CF5	WSM33S	10	●	020	7910424	25,50
DX18-3E300N02-CE4	WKP23S	10	●	020	7795869	23,19
DX18-3E300N02-CE4	WSM23S	10	●	020	7795859	23,19
DX18-3E300N02-CE4	WSM33G	10	●	020	8485142	23,76
DX18-3E300N02-CE4	WSM33S	10	●	020	7782851	23,19
DX18-3E300N02-CE4	WSM43S	10	●	020	7795868	23,19
DX18-3E300N02-CF5	WSM23S	10	●	020	7795895	23,19
DX18-3E300N02-CF5	WSM33G	10	●	020	8492962	23,76
DX18-3E300N02-CF5	WSM33S	10	●	020	7795883	23,19
DX18-3E300N02-CF5	WSM43S	10	●	020	7795896	23,19
DX18-3E300N02-CF6	WSM33G	10	●	020	8492966	23,76
DX18-3E300N02-CF6	WSM33S	10	●	020	7795905	23,19
DX18-3E300N02-CF6	WSM43S	10	●	020	7795912	23,19
DX18-3E300N02-CK8	WN13	10	●	020	8407919	22,62
DX18-3E300N02-UF7	WSM23S	10	●	020	8039197	23,19
DX18-3E300N02-UF7	WSM33G	10	●	020	8492990	23,75
DX18-3E300N02-UF7	WSM33S	10	●	020	8039198	23,19
DX18-3E300N03-GD3	WKP23S	10	●	020	7910421	23,19
DX18-3E300N03-GD3	WSM33G	10	●	020	8492969	23,76
DX18-3E300N03-GD3	WSM33S	10	●	020	7910420	23,19
DX18-3E300N03-GD6	WSM23S	10	●	020	7795919	23,19
DX18-3E300N03-GD6	WSM33G	10	●	020	8492973	23,76
DX18-3E300N03-GD6	WSM33S	10	●	020	7795918	23,19
DX18-3E300N03-UA4	WKP13S	10	●	020	7910436	23,19
DX18-3E300N03-UA4	WKP33S	10	●	020	7910437	23,19
DX18-3E300N03-UD4	WKP23S	10	●	020	7910441	23,19
DX18-3E300N03-UD4	WSM33G	10	●	020	8492979	23,76
DX18-3E300N03-UD4	WSM33S	10	●	020	7910442	23,19
DX18-3E300N03-UF4	WKP23S	10	●	020	7910450	23,19
DX18-3E300N03-UF4	WSM23S	10	●	020	7910453	23,19
DX18-3E300N03-UF4	WSM33G	10	●	020	8492985	23,76
DX18-3E300N03-UF4	WSM33S	10	●	020	7910451	23,19
DX18-3E300N03-UF4	WSM43S	10	●	020	7910452	23,19
DX18-3E300N15-RD4	WSM23S	10	●	020	7910434	23,19
DX18-3E300N15-RD4	WSM33G	10	●	020	8492977	23,76
DX18-3E300N15-RD4	WSM33S	10	●	020	7910435	23,19
DX18-3E300N15-RF7	WSM13S	10	●	020	7910573	23,19
DX18-3E300N15-RF7	WSM23S	10	●	020	7910574	23,19

Bezeichnung / Designation	Sorte / Grade	VE / US		Disc. Gr.	Article No.	EURO Stück / piece
DX18-3E300R15-CF5	WSM33G	10	●	020	8492999	26,20
DX18-3E300R15-CF5	WSM33S	10	●	020	7910428	25,50
DX18-3E300R15-CF6	WSM33G	10	●	020	8493006	26,20
DX18-3E300R6-CE4	WSM33G	10	●	020	8492993	23,76
DX18-3E300R6-CE4	WSM33S	10	●	020	7795870	23,19
DX18-3E300R6-CE4	WSM43S	10	●	020	7795871	23,19
DX18-3E300R6-CF5	WSM33G	10	●	020	8493000	23,76
DX18-3E300R6-CF5	WSM33S	10	●	020	7795897	23,19
DX18-3E300R6-CF6	WSM33G	10	●	020	8493007	23,76
DX18-3E300R6-CF6	WSM33S	10	●	020	7795913	23,19
DX18-3E300R7-CF5	WSM33G	10	●	020	8493001	26,10
DX18-3E300R7-CF5	WSM33S	10	●	020	7910429	25,50
DX18-3E318N02-UF8	WSM23S	10	●	020	8039199	30,20
DX18-3E325N01-UF8	WSM23S	10	●	020	8039200	30,20
DX18-3F300N02-CE4	WSM33G	10	●	020	8493008	23,75
DX18-3F300N02-CE4	WSM33S	10	●	020	8042304	15,54
DX18-3F300N02-CF5	WSM33G	10	●	020	8493009	23,75
DX18-3F300N02-CF5	WSM33S	10	●	020	8042305	15,54
DX18-4E400N02-CK8	WN13	10	●	020	8408870	24,87
DX18-4E400N02-UF4	WSM33G	10	●	020	8492986	26,10
DX18-4E400N02-UF4	WSM33S	10	●	020	8039219	25,50
DX18-4E400N02-UF7	WSM23S	10	●	020	8039202	25,50
DX18-4E400N04-GD3	WKP23S	10	●	020	8039204	25,50
DX18-4E400N04-GD3	WSM33G	10	●	020	8492970	26,20
DX18-4E400N04-GD3	WSM33S	10	●	020	8039205	25,50
DX18-4E400N04-GD6	WSM23S	10	●	020	8039206	25,50
DX18-4E400N04-GD6	WSM33G	10	●	020	8492974	26,20
DX18-4E400N04-GD6	WSM33S	10	●	020	8039207	25,50
DX18-4E400N04-UA4	WKP13S	10	●	020	8039212	25,50
DX18-4E400N04-UA4	WKP33S	10	●	020	8039213	25,50
DX18-4E400N04-UD4	WKP23S	10	●	020	8039214	25,50
DX18-4E400N04-UD4	WSM33G	10	●	020	8492980	26,20
DX18-4E400N04-UD4	WSM33S	10	●	020	8039215	25,50
DX18-4E400N04-UF4	WKP23S	10	●	020	8039218	25,50
DX18-4E400N04-UF4	WSM33G	10	●	020	8492987	26,20
DX18-4E400N04-UF4	WSM33S	10	●	020	8039220	25,50
DX18-4E400N04-UF4	WSM43S	10	●	020	8039221	25,50
DX18-4E400N04-UF8	WSM23S	10	●	020	8039201	33,20
DX18-4E400N08-UA4	WKP13S	10	●	020	8039208	25,50
DX18-4E400N08-UA4	WKP33S	10	●	020	8039209	25,50
DX18-4E400N08-UD4	WKP23S	10	●	020	8039210	25,50
DX18-4E400N08-UD4	WSM33G	10	●	020	8492981	26,10
DX18-4E400N08-UD4	WSM33S	10	●	020	8039211	25,50
DX18-4E400N08-UF4	WKP23S	10	●	020	8039216	25,50
DX18-4E400N08-UF4	WSM33G	10	●	020	8492988	26,10
DX18-4E400N08-UF4	WSM33S	10	●	020	8039217	25,50
DX18-4E400N20-RF7	WSM23S	10	●	020	8039222	25,50
DX18-4E425N02-UF8	WSM23S	10	●	020	8039203	33,20
DX18-4F400N04-UF4	WSM33G	10	●	020	8493010	26,10
DX18-4F400N04-UF4	WSM33S	10	●	020	8042306	17,09
E06H-STFCL06-R		1	●	060	5673714	202,00
E06H-STFCR06-R		1	●	060	5673716	202,00
E06M-SCLPL2		1	●	060	7394717	303,00
E06M-SCLPR2		1	●	060	7394718	303,00
E06M-STFCL1.8		1	●	060	7394695	303,00
E06M-STFCR1.8		1	●	060	7394696	303,00
E08K-SCLCL06-R		1	●	060	5673675	241,00
E08K-SCLCR06-R		1	●	060	5673696	241,00
E08K-STFCL06-R		1	●	060	5673717	241,00
E08K-STFCR06-R		1	●	060	5673718	241,00
E08R-SCLPL2		1	●	060	7394719	371,00
E08R-SCLPR2		1	●	060	7394720	371,00
E08R-STFCL1.8		1	○	060	7394697*	371,00
E08R-STFCR1.8		1	●	060	7394698	371,00
E10M-SCLCL06-R		1	●	060	5673676	303,00
E10M-SCLCR06-R		1	●	060	5673697	303,00
E10M-SDUCL07-R		1	●	060	5673679	303,00
E10M-SDUCR07-R		1	●	060	5673710	303,00
E10M-STFCL09-R		1	●	060	5673719	303,00
E10M-STFCR09-R		1	●	060	5673721	303,00

Bezeichnung / Designation	Sorte / Grade	VE / US		Disc. Gr.	Article No.	EURO Stück / piece
E10R-STFCL2		1	○	060	7394699*	516,00
E10R-STFCR2		1	●	060	7394700	516,00
E12Q-SCLCL06-R		1	●	060	5673677	371,00
E12Q-SCLCR06-R		1	●	060	5673698	371,00
E12Q-SDUCL07-R		1	●	060	5673690	371,00
E12Q-SDUCR07-R		1	●	060	5673711	371,00
E12Q-STFCL09-R		1	●	060	5673723	371,00
E12Q-STFCR09-R		1	●	060	5673725	371,00
E12S-STFCL2		1	○	060	7394701*	666,00
E12S-STFCR2		1	●	060	7394702	666,00
E16R-SCLCL09-R		1	●	060	5673678	516,00
E16R-SCLCR09-R		1	●	060	5673699	516,00
E16R-SDUCL07-R		1	●	060	5673692	516,00
E16R-SDUCR07-R		1	●	060	5673712	516,00
E16R-STFCL11-R		1	●	060	5673727	516,00
E16R-STFCR11-R		1	●	060	5673728	516,00
E16T-STFCL3		1	●	060	7394703	815,00
E16T-STFCR3		1	●	060	7394704	815,00
E20314-M3	NID	1	●	TH1	5603070	28,30
E20314-M4	NID	1	●	TH1	5603071	29,20
E20314-M5	NID	1	●	TH1	5603072	30,60
E20314-M6	NID	1	●	TH1	5603073	30,60
E20314-M7	NID	1	●	TH1	5603074	37,60
E20314-M8	NID	1	●	TH1	5603075	35,70
E20314-M10	NID	1	●	TH1	5603077	42,70
E2031406-M3	TICN	1	●	TH1	5603086	40,10
E2031406-M4	TICN	1	●	TH1	5603087	43,40
E2031406-M5	TICN	1	●	TH1	5603088	44,90
E2031406-M6	TICN	1	●	TH1	5603089	57,90
E2031406-M7	TICN	1	●	TH1	5603090	62,40
E2031406-M8	TICN	1	●	TH1	5603091	69,50
E2031406-M9	TICN	1	●	TH1	5603092	107,00
E2031406-M10	TICN	1	●	TH1	5603093	83,00
E2031416-M4	TICN	1	●	TH5	5603111	50,10
E2031416-M5	TICN	1	●	TH5	5603112	58,00
E2031416-M6	TICN	1	●	TH5	5603113	70,40
E2031416-M7	TICN	1	●	TH5	5603114	84,30
E2031416-M8	TICN	1	●	TH5	5603115	83,30
E2031416-M10	TICN	1	●	TH5	5603116	99,80
E2031436-M4	TICN	1	●	TH1	5603123	56,40
E2031436-M5	TICN	1	●	TH1	5603124	58,30
E2031436-M6	TICN	1	●	TH1	5603125	75,20
E2031436-M8	TICN	1	●	TH1	5603126	90,30
E2031436-M10	TICN	1	●	TH1	5603127	108,00
E2031446-M6	TICN	1	●	TH5	5603131	83,10
E2031446-M8	TICN	1	●	TH5	5603132	98,30
E2031446-M10	TICN	1	●	TH5	5603133	123,00
E2031456-M4	TICN	1	●	TH5	6826953	50,10
E2031456-M5	TICN	1	●	TH5	6826954	58,00
E2031456-M6	TICN	1	●	TH5	6826955	70,40
E2031456-M8	TICN	1	●	TH5	6826956	83,30
E2031456-M10	TICN	1	●	TH5	6826957	99,80
E2031466-M4	TICN	1	●	TH1	5603102	44,50
E2031466-M5	TICN	1	●	TH1	5603103	46,00
E2031466-M6	TICN	1	●	TH1	5603104	59,40
E2031466-M8	TICN	1	●	TH1	5603105	71,30
E2031466-M10	TICN	1	●	TH1	5603106	85,10
E20364-M12	NID	1	●	TH1	5603078	53,80
E20364-M14	NID	1	●	TH1	5603079	69,60
E20364-M16	NID	1	●	TH1	5603080	77,00
E20364-M18	NID	1	●	TH1	5603081	112,00
E20364-M20	NID	1	●	TH1	5603082	116,00
E20364-M22	NID	1	●	TH1	5603083	137,00
E20364-M24	NID	1	●	TH1	5603084	151,00
E20364-M30	NID	1	●	TH1	5603085	245,00
E2036406-M12	TICN	1	●	TH1	5603094	96,50
E2036406-M14	TICN	1	●	TH1	5603095	119,00
E2036406-M16	TICN	1	●	TH1	5603096	132,00
E2036406-M18	TICN	1	●	TH1	5603097	187,00
E2036406-M20	TICN	1	●	TH1	5603098	228,00

Bezeichnung / Designation	Sorte / Grade	VE / US		Disc. Gr.	Article No.	EURO Stück / piece
E2036406-M22	TICN	1	●	TH1	5603099	256,00
E2036406-M24	TICN	1	●	TH1	5603100	275,00
E2036406-M30	TICN	1	●	TH1	5603101	389,00
E2036416-M12	TICN	1	●	TH5	5603117	119,00
E2036416-M14	TICN	1	●	TH5	5603118	163,00
E2036416-M16	TICN	1	●	TH5	5603119	148,00
E2036416-M18	TICN	1	●	TH5	5603120	211,00
E2036416-M20	TICN	1	●	TH5	5603121	251,00
E2036416-M24	TICN	1	●	TH5	5603122	307,00
E2036436-M12	TICN	1	●	TH1	5603128	125,00
E2036436-M16	TICN	1	●	TH1	5603129	172,00
E2036436-M20	TICN	1	●	TH1	5603130	296,00
E2036446-M12	TICN	1	●	TH5	5603134	133,00
E2036446-M16	TICN	1	●	TH5	5603135	194,00
E2036456-M12	TICN	1	●	TH5	6826958	119,00
E2036456-M16	TICN	1	●	TH5	6826959	148,00
E2036456-M20	TICN	1	●	TH5	6826960	251,00
E2036466-M12	TICN	1	●	TH1	5603107	99,00
E2036466-M16	TICN	1	●	TH1	5603108	136,00
E2036466-M20	TICN	1	●	TH1	5603109	234,00
E2036466-M24	TICN	1	●	TH1	5603110	282,00
E2061604-M2	CRN	1	●	TH7	5081706	67,80
E2061604-M2.5	CRN	1	●	TH7	5081707	58,40
E2061604-M3	CRN	1	●	TH7	5081708	52,70
E2061604-M4	CRN	1	●	TH7	5081709	48,90
E2061604-M5	CRN	1	●	TH7	5081710	52,70
E2061604-M6	CRN	1	●	TH7	5081711	60,20
E2061604-M8	CRN	1	●	TH7	5081712	75,30
E2061604-M10	CRN	1	●	TH7	5081713	90,40
E2066604-M12	CRN	1	●	TH7	5200973	105,00
E20S-SCLCL09-R		1	●	060	6344636	652,00
E20S-SCLCR09-R		1	●	060	6344638	652,00
E20S-SDUCL11-R		1	●	060	6344650	652,00
E20S-SDUCR11-R		1	●	060	6344651	652,00
E20S-STFCL11-R		1	●	060	6344653	652,00
E20S-STFCR11-R		1	●	060	6344654	652,00
E21364-M8X0.75	NID	1	●	TH1	5603137	52,90
E21364-M8X1	NID	1	●	TH1	5603138	51,10
E21364-M10X1	NID	1	●	TH1	5603139	52,90
E21364-M10X1.25	NID	1	●	TH1	5603141	64,80
E21364-M12X1	NID	1	●	TH1	5603140	61,30
E21364-M12X1.25	NID	1	●	TH1	5603142	71,60
E21364-M12X1.5	NID	1	●	TH1	5603143	57,50
E21364-M14X1.5	NID	1	●	TH1	5603144	80,80
E21364-M16X1.5	NID	1	●	TH1	5603145	84,50
E21364-M18X1.5	NID	1	●	TH1	5603146	115,00
E21364-M20X1.5	NID	1	●	TH1	5603147	119,00
E21364-M22X1.5	NID	1	●	TH1	5603148	129,00
E21364-M24X1.5	NID	1	●	TH1	5603149	145,00
E21364-M26X1.5	NID	1	●	TH1	5603150	177,00
E21364-M30X1.5	NID	1	●	TH1	5603151	232,00
E2136406-M6X0.75	TICN	1	●	TH1	5603152	79,90
E2136406-M8X0.75	TICN	1	●	TH1	5603153	88,00
E2136406-M8X1	TICN	1	●	TH1	5603154	85,30
E2136406-M10X1	TICN	1	●	TH1	5603155	93,70
E2136406-M10X1.25	TICN	1	●	TH1	5603157	108,00
E2136406-M12X1	TICN	1	●	TH1	5603156	104,00
E2136406-M12X1.25	TICN	1	●	TH1	5603158	119,00
E2136406-M12X1.5	TICN	1	●	TH1	5603159	100,00
E2136406-M14X1.5	TICN	1	●	TH1	5603160	130,00
E2136406-M16X1.5	TICN	1	●	TH1	5603161	139,00
E2136406-M18X1.5	TICN	1	●	TH1	5603162	189,00
E2136406-M20X1.5	TICN	1	●	TH1	5603163	209,00
E2136406-M22X1.5	TICN	1	●	TH1	5603164	237,00
E2136406-M24X1.5	TICN	1	●	TH1	5603165	258,00
E2136406-M26X1.5	TICN	1	●	TH1	5603166	297,00
E2136406-M30X1.5	TICN	1	●	TH1	5603167	388,00
E2136416-M8X1	TICN	1	●	TH5	5603177	102,00
E2136416-M10X1	TICN	1	●	TH5	5603178	111,00
E2136416-M12X1	TICN	1	●	TH5	5603179	123,00

Bezeichnung / Designation	Sorte / Grade	VE / US		Disc. Gr.	Article No.	EURO Stück / piece
E2136416-M12X1.5	TICN	1	●	TH5	5603180	118,00
E2136416-M14X1.5	TICN	1	●	TH5	5603181	154,00
E2136416-M16X1.5	TICN	1	●	TH5	5603182	165,00
E2136416-M18X1.5	TICN	1	●	TH5	5603183	224,00
E2136416-M20X1.5	TICN	1	●	TH5	5603184	248,00
E2136416-M22X1.5	TICN	1	●	TH5	5603185	273,00
E2136466-M8X1	TICN	1	●	TH1	5603168	87,50
E2136466-M10X1	TICN	1	●	TH1	5603169	96,10
E2136466-M12X1	TICN	1	●	TH1	5603170	107,00
E2136466-M12X1.5	TICN	1	●	TH1	5603171	103,00
E2136466-M14X1.5	TICN	1	●	TH1	5603172	134,00
E2136466-M16X1.5	TICN	1	●	TH1	5603173	143,00
E2136466-M18X1.5	TICN	1	●	TH1	5603174	194,00
E2136466-M20X1.5	TICN	1	●	TH1	5603175	214,00
E2136466-M22X1.5	TICN	1	●	TH1	5603176	237,00
E22314-UNC6	NID	1	●	TH1	5603186	34,30
E22314-UNC8	NID	1	●	TH1	5603187	35,30
E22314-UNC10	NID	1	●	TH1	5603188	37,60
E22314-UNC1/4	NID	1	●	TH1	5603189	40,40
E22364-UNC5/16	NID	1	●	TH1	5603190	44,10
E22364-UNC3/8	NID	1	●	TH1	5603191	50,10
E22364-UNC7/16	NID	1	●	TH1	5603192	62,20
E22364-UNC1/2	NID	1	●	TH1	5603193	67,80
E22364-UNC9/16	NID	1	●	TH1	5603194	98,40
E22364-UNC5/8	NID	1	●	TH1	5603195	85,40
E22364-UNC3/4	NID	1	●	TH1	5603196	116,00
E22364-UNC7/8	NID	1	●	TH1	5603197	150,00
E23314-UNF10	NID	1	●	TH1	5603200	42,70
E23314-UNF1/4	NID	1	●	TH1	5603201	45,00
E23364-UNF5/16	NID	1	●	TH1	5603202	49,20
E23364-UNF3/8	NID	1	●	TH1	5603203	52,00
E23364-UNF7/16	NID	1	●	TH1	5603204	67,80
E23364-UNF1/2	NID	1	●	TH1	5603205	65,90
E23364-UNF9/16	NID	1	●	TH1	5603206	96,60
E23364-UNF5/8	NID	1	●	TH1	5603207	89,10
E23364-UNF3/4	NID	1	●	TH1	5603208	122,00
E23364-UNF7/8	NID	1	●	TH1	5603209	133,00
E24364-G1/8	NID	1	●	TH1	5603210	58,00
E24364-G1/4	NID	1	●	TH1	5603211	72,40
E24364-G3/8	NID	1	●	TH1	5603212	87,30
E24364-G1/2	NID	1	●	TH1	5603213	120,00
E24364-G3/4	NID	1	●	TH1	5603214	195,00
E24364-G1	NID	1	●	TH1	5603215	277,00
E24364-G1.1/4	NID	1	●	TH1	5603216	461,00
E2436406-G1/8	TICN	1	●	TH1	5603218	97,40
E2436406-G1/4	TICN	1	●	TH1	5603219	125,00
E2436406-G3/8	TICN	1	●	TH1	5603220	159,00
E2436406-G1/2	TICN	1	●	TH1	5603221	229,00
E2436406-G3/4	TICN	1	●	TH1	5603222	332,00
E2436406-G1	TICN	1	●	TH1	5603223	485,00
E2436406-G1.1/4	TICN	1	●	TH1	5603224	767,00
E2436406-G1.1/2	TICN	1	●	TH1	5603225	1.069,00
E25T-SCLCL09-R		1	●	060	6344674	797,00
E25T-SCLCR09-R		1	●	060	6344676	797,00
E25T-SDUCL11-R		1	●	060	6344677	797,00
E25T-SDUCR11-R		1	●	060	6344678	797,00
E25T-STFCL16-R		1	●	060	6344679	797,00
E25T-STFCR16-R		1	●	060	6344693	797,00
E6818-6.3		1	●	DHC	5071389	13,74
E6818-8		1	●	DHC	5071390	13,74
E6818-12.5		1	●	DHC	5071385	17,98
E6818-16		1	●	DHC	5071386	22,92
E6818-20		1	●	DHC	5071387	31,50
E6818-25		1	●	DHC	5071388	43,30
E6819-4.3		1	●	DHC	5071404	12,10
E6819-5		1	●	DHC	5071405	11,87
E6819-5.3		1	●	DHC	5071406	12,02
E6819-5.8		1	●	DHC	5071407	12,24
E6819-6		1	●	DHC	5071408	12,24
E6819-6.3		1	●	DHC	5071409	12,24

Bezeichnung / Designation	Sorte / Grade	VE / US		Disc. Gr.	Article No.	EURO Stück / piece
E6819-7		1	●	DHC	5071410	13,02
E6819-7.3		1	●	DHC	5071411	13,60
E6819-8		1	●	DHC	5071412	13,69
E6819-8.3		1	●	DHC	5071413	14,16
E6819-9.4		1	●	DHC	5071414	15,17
E6819-10		1	●	DHC	5071391	16,63
E6819-10.4		1	●	DHC	5071392	16,63
E6819-11.5		1	●	DHC	5071393	17,80
E6819-12.4		1	●	DHC	5071394	18,10
E6819-13.4		1	●	DHC	5071395	19,19
E6819-15		1	●	DHC	5071396	20,26
E6819-16.5		1	●	DHC	5071397	22,47
E6819-19		1	●	DHC	5071398	30,00
E6819-20.5		1	●	DHC	5071399	30,00
E6819-23		1	●	DHC	5071400	39,40
E6819-25		1	●	DHC	5071401	40,80
E6819-30		1	●	DHC	5071402	61,70
E6819-31		1	●	DHC	5071403	65,40
E6819TIN-6	TIN	1	●	DHC	5071426	29,30
E6819TIN-6.3	TIN	1	●	DHC	5200268	29,30
E6819TIN-7	TIN	1	●	DHC	5071428	31,50
E6819TIN-8	TIN	1	●	DHC	5071429	31,50
E6819TIN-8.3	TIN	1	●	DHC	5071430	31,50
E6819TIN-10	TIN	1	●	DHC	5071415	35,40
E6819TIN-10.4	TIN	1	●	DHC	5071416	36,00
E6819TIN-11.5	TIN	1	●	DHC	5071417	38,10
E6819TIN-12.4	TIN	1	●	DHC	5071418	38,80
E6819TIN-15	TIN	1	●	DHC	5071419	43,60
E6819TIN-16.5	TIN	1	●	DHC	5071420	47,20
E6819TIN-19	TIN	1	●	DHC	5071421	63,60
E6819TIN-20.5	TIN	1	●	DHC	5071422	65,40
E6819TIN-23	TIN	1	●	DHC	5071423	84,20
E6819TIN-25	TIN	1	●	DHC	5071424	89,60
E6819TIN-31	TIN	1	●	DHC	5071425	113,00
E7818-16		1	●	DHC	5071431	42,40
E7818-20		1	●	DHC	5071432	53,30
E7818-25		1	●	DHC	5071433	64,20
E7818-31.5		1	●	DHC	5071434	72,00
E7818-40		1	●	DHC	5071435	108,00
E7818-50		1	●	DHC	5071436	145,00
E7818-63		1	●	DHC	5071437	270,00
E7818-80		1	●	DHC	5071438	506,00
E7819-15		1	●	DHC	5071439	43,30
E7819-16.5		1	●	DHC	5071440	46,30
E7819-19		1	●	DHC	5071441	63,00
E7819-20.5		1	●	DHC	5071442	61,70
E7819-23		1	●	DHC	5071443	61,70
E7819-25		1	●	DHC	5071444	61,70
E7819-26		1	●	DHC	5071445	69,60
E7819-28		1	●	DHC	5071447	69,60
E7819-30		1	●	DHC	5071448	69,60
E7819-31		1	●	DHC	5071449	70,90
E7819-34		1	●	DHC	5071450	77,50
E7819-37		1	●	DHC	5071451	86,00
E7819-40		1	●	DHC	5071452	96,90
E7819-50		1	●	DHC	5071453	121,00
E7819-63		1	●	DHC	5071454	199,00
E7819-80		1	●	DHC	5071455	348,00
EB101		1	●	052	5008230	162,00
EB102		1	●	052	5008231	162,00
EB103		1	●	052	5008232	162,00
EB104		1	●	052	5008233	148,00
EB105		1	●	052	5008234	148,00
EB106		1	●	052	5008235	68,70
EB107.CS		1	●	052	5008236	298,00
EB108		1	●	052	5008237	68,70
EB109.CS		1	●	052	5008238	332,00
EB110		1	●	052	5008239	72,90
EB111.CS		1	●	052	5008240	512,00
EB112.CS		1	●	052	5008241	638,00

Bezeichnung / Designation	Sorte / Grade	VE / US		Disc. Gr.	Article No.	EURO Stück / piece
EB121		1	●	052	5008148	456,00
EB122		1	●	052	5008149	422,00
EB123		1	●	052	5008150	1.741,00
EB134AL		1	●	052	6341147	678,00
EB135AL		1	●	052	6341148	786,00
EB136AL		1	●	052	6341149	888,00
EB137AL		1	●	052	6341570	1.061,00
EB138AL		1	●	052	6341571	1.239,00
EB139AL		1	●	052	6341572	1.413,00
EB140AL		1	●	052	6341573	1.586,00
EB205-206-1.CC06 (ARS)		1	●	052	6830908	181,00
EB205-206.CC06		1	●	052	5008333	181,00
EB207-208-1.CC09 (ARS)		1	●	052	6830909	197,00
EB207-208.CC09		1	●	052	5008334	197,00
EB209-210-1.CC09 (ARS)		1	●	052	6830960	221,00
EB209-210.CC09		1	●	052	5008335	221,00
EB211-212-1.CC12 (ARS)		1	●	052	6830961	242,00
EB211-212.CC12		1	●	052	5008336	242,00
EB213-214-1.CC12 (ARS)		1	●	052	6830962	269,00
EB213-214.CC12		1	●	052	5008337	269,00
EB215-1.CC12 (ARS)		1	●	052	6830963	270,00
EB215.CC12		1	●	052	5008172	270,00
EB216-1.CC12 (ARS)		1	●	052	6830964	283,00
EB216.CC12		1	●	052	5008173	283,00
EB217-1.CC12 (ARS)		1	●	052	6830965	251,00
EB217.CC12		1	●	052	5008174	251,00
EB301 WK10		1	●	052	5008216	92,40
EB302 WK10		1	●	052	5008217	94,90
EB303.WC02.CS		1	●	052	5008218	332,00
EB304.WC02.CS		1	●	052	5008219	408,00
EB305.TC06		1	●	052	7645049	148,00
EB305.WC03		1	●	052	5008220*	148,00
EB306.TC06		1	●	052	7645180	148,00
EB307.TC06		1	●	052	7645181	148,00
EB308.TC11		1	●	052	7645182	153,00
EB309.TC11		1	●	052	7645183	153,00
EB310.TC11		1	●	052	7645184	153,00
EB311.TC11		1	●	052	7645185	162,00
EB312.TC11		1	●	052	7645186	167,00
EB313.TC11		1	●	052	7645187	174,00
EB314.TC11		1	●	052	7645188	188,00
EB321.CP05		1	●	052	5008192	128,00
EB323.CP05		1	●	052	5008194	133,00
EB325.CP05		1	●	052	5008196	141,00
EB327.CC06		1	●	052	5008198	153,00
EB329.CC06		1	●	052	5008200	182,00
EB341.TC06		1	●	052	7645189	128,00
EB343.TC06		1	●	052	7645190	133,00
EB345.TC06		1	●	052	7645191	141,00
EB347.TC06		1	●	052	7645192	153,00
EB347.WC04		1	●	052	5008210*	153,00
EB349.TC11		1	●	052	7645193	182,00
EB349.WC05		1	●	052	5008212*	182,00
EB353.TC06		1	●	052	7673653	218,00
EB354.TC06.CS		1	●	052	7673654	445,00
EB355.TC06		1	●	052	7673655	218,00
EB356.TC06.CS		1	●	052	7673656	483,00
EB357.TC06		1	●	052	7673657	218,00
EB358.TC06.CS		1	●	052	7673658	483,00
EB359.TC11		1	●	052	7673659	227,00
EB360.TC11.CS		1	●	052	7673670	667,00
EB361.TC11.CS		1	●	052	7673671	792,00
EB362.TC11		1	●	052	7673672	227,00
EB363.TC11.CS		1	●	052	7673673	667,00
EB364.TC11.CS		1	●	052	7673674	792,00
EB365.TC11		1	●	052	7673675	227,00
EB366.TC11.CS		1	●	052	7673676	667,00
EB367.TC11.CS		1	●	052	7673677	792,00
EB368.TC11		1	●	052	7673678	232,00
EB369.TC11.CS		1	●	052	7673679	673,00

Bezeichnung / Designation	Sorte / Grade	VE / US		Disc. Gr.	Article No.	EURO Stück / piece
EB370.TC11.CS		1	●	052	7673680	800,00
EB371.TC11		1	●	052	7673681	238,00
EB372.TC11.CS		1	●	052	7673682	683,00
EB373.TC11.CS		1	●	052	7673683	805,00
EB374.TC11		1	●	052	7673684	247,00
EB375.TC11.CS		1	●	052	7673685	689,00
EB376.TC11.CS		1	●	052	7673686	812,00
EB377.TC11		1	●	052	7673687	261,00
EB378.TC11.CS		1	●	052	7673688	700,00
EB379.TC11.CS		1	●	052	7673689	827,00
EB401-1.CC06 (ARS)		1	●	052	6830966	162,00
EB401.CC06		1	●	052	5094987	162,00
EB402-1.CC06 (ARS)		1	●	052	6830967	162,00
EB402.CC06		1	●	052	5094988	162,00
EB403-1.CC06 (ARS)		1	●	052	6830968	173,00
EB403.CC06		1	●	052	5094989	173,00
EB501		1	●	052	5106301	155,00
EB502		1	●	052	5106302	155,00
EB503		1	●	052	5106303	155,00
EB504		1	●	052	5106304	128,00
EB505		1	●	052	5106305	128,00
EB506		1	●	052	5106306	128,00
EB507		1	●	052	5106307	128,00
EB508		1	●	052	5106308	68,70
EB509.CS		1	●	052	5106309	402,00
EB510		1	●	052	5106310	72,90
EB511.CS		1	●	052	5106311	445,00
EB512.TC06		1	●	052	7645194	148,00
EB513		1	●	052	5107062	173,00
EB514.CS		1	●	052	5107063	402,00
EB515		1	●	052	5107064	174,00
EB516.CS		1	●	052	5107065	402,00
EB523.CP05		1	●	052	6310654	191,00
EB524.CP05		1	●	052	6310659	240,00
EB525.CP05		1	●	052	6310671	198,00
EB526.CP05		1	●	052	6310673	248,00
EB527.CP05		1	●	052	6310677	215,00
EB528.CP05		1	●	052	6310678	269,00
EB529.CC06		1	●	052	6310700	269,00
EB530.CC06		1	●	052	6310701	323,00
EB531.CC06		1	●	052	6310702	405,00
EB532.CC06		1	●	052	6310703	231,00
EB533.CC06		1	●	052	6310841	290,00
EB534.CC06		1	●	052	6310842	269,00
EB535.CC06		1	●	052	6310843	337,00
EB536.TC06		1	●	052	7645195	191,00
EB537.TC06		1	●	052	7645196	240,00
EB538.TC06		1	●	052	7645197	198,00
EB539.TC06		1	●	052	7645198	248,00
EB540.TC06		1	●	052	7645199	215,00
EB541.TC06		1	●	052	7645200	269,00
EB542.TC11		1	●	052	7645201	269,00
EB543.TC11		1	●	052	7645202	323,00
EB544.TC11		1	●	052	7645203	405,00
EB545.TC06		1	●	052	7645204	231,00
EB546.TC06		1	●	052	7645205	290,00
EB547.TC11		1	●	052	7645206	269,00
EB548.TC11		1	●	052	7645208	337,00
EB549.WC02		1	●	052	6363209	124,00
EB550.WC02		1	●	052	6363280	124,00
EB553		1	●	052	7649555	188,00
EB554.CS		1	●	052	7649556	456,00
EB555		1	●	052	7649557	191,00
EB556.CS		1	●	052	7649558	483,00
EB601		1	●	052	5336200	242,00
EB602		1	●	052	5336201	242,00
EB603.WXP15		1	●	052	5336159	86,20
EB604.WXP15		1	●	052	5336202	86,20
EB605.WXP15		1	●	052	5336204	86,20
EB606.WXP15		1	●	052	5336205	86,20

Bezeichnung / Designation	Sorte / Grade	VE / US		Disc. Gr.	Article No.	EURO Stück / piece
EB607.WXP15		1	●	052	5336206	86,20
EB608.WXP15		1	●	052	5336207	86,20
EB609.WXP15		1	●	052	5336208	86,20
EB610.WXP15		1	●	052	5336209	86,20
EB611.WC03		1	●	052	5336210	129,00
EB612.WC03		1	●	052	5336211	129,00
EB613.WC03		1	●	052	5336212	129,00
EB614.WC03		1	●	052	5336213	129,00
EB615.WC03		1	●	052	5336214	129,00
EB616.WC03		1	●	052	5336215	129,00
EB617.WC03		1	●	052	5336216	129,00
EB618.WC03		1	●	052	5336218	129,00
EB619.WC03		1	●	052	5336219	129,00
EB620.WC03		1	●	052	5336220	129,00
EB621.WC04		1	●	052	5336231	240,00
EB622.WC04		1	●	052	5336232	240,00
EB623.WC04		1	●	052	5336233	240,00
EB624.WC04		1	●	052	5336234	240,00
EB625		1	●	052	5336235	313,00
EB626		1	●	052	5336236	313,00
EB627		1	●	052	5336237	346,00
EB628		1	●	052	5336238	346,00
EB629.WC04		1	●	052	5336239	240,00
EB630.WC04		1	●	052	5336250	240,00
EB631		1	●	052	5336252	252,00
EB632		1	●	052	5336253	252,00
EB634.WC04		1	●	052	5336254	286,00
EB635		1	●	052	5336255	132,00
EB636		1	●	052	5336256	29,00
EB637.WC03.CS		1	●	052	5336222	621,00
EB638.WC03.CS		1	●	052	5336223	621,00
EB639.WC03.CS		1	●	052	5336224	621,00
EB640.WC03.CS		1	●	052	5336225	621,00
EB641.WC03.CS		1	●	052	5336226	621,00
EB642		1	●	052	5336227	261,00
EB643.CS		1	●	052	5336228	826,00
EB644.WC04		1	●	052	5336229	240,00
EB645.WC04		1	●	052	5336230	240,00
EB701.WKP21	WKP21	1	●	030	8217269	38,80
EB702.WKP21	WKP21	1	●	030	8217270	38,80
EB703.WKP21	WKP21	1	●	030	8217271	40,70
EB704.WKP21	WKP21	1	●	030	8217272	40,70
EB705.WKP21	WKP21	1	●	030	8217273	44,60
EB706.WKP21	WKP21	1	●	030	8217274	44,60
EB707.WKP21	WKP21	1	●	030	8217275	52,40
EB708.TC06		1	●	052	8217276	247,00
EB709.TC06		1	●	052	8217277	247,00
EB710.TC06		1	●	052	8217278	247,00
EB711.TC09		1	●	052	8217279	247,00
EB712.TC09		1	●	052	8217280	247,00
EB713.TC06		1	●	052	8217281	144,00
EB714.TC09		1	●	052	8217282	144,00
EB715.TC11		1	●	052	8217283	144,00
EB716.CC06		1	●	052	8217284	144,00
EB717.CC09		1	●	052	8217285	144,00
EB718		1	●	052	8217286	1.160,00
EB719		1	●	052	8217287	501,00
EB720		1	●	052	8217288	587,00
EB721		1	●	052	8217289	357,00
EB722		1	●	052	8217290	443,00
EB723		1	●	052	8217291	686,00
EB724		1	●	052	8217292	815,00
EB725.CC12		1	●	052	8217293	250,00
EB726.CN19		1	●	052	8217294	250,00
EB727.SC12		1	●	052	8217295	250,00
EB728.P400		1	●	052	8217296	250,00
EB731		1	●	052	8217297	1.039,00
EB732		1	●	052	8217298	1.117,00
EB733		1	●	052	8217299	1.195,00
EB734		1	●	052	8217300	1.272,00

Bezeichnung / Designation	Sorte / Grade	VE / US		Disc. Gr.	Article No.	EURO Stück / piece
EB735		1	●	052	8217301	**105,00**
EB736		1	●	052	8217302	**105,00**
EB737		1	●	052	8217303	**105,00**
ENMX08T316R-D27	WHH15X	10	●	004	7960085	**22,32**
ENMX08T316R-D27	WKK25G	10	●	004	8284921	**21,32**
ENMX08T316R-D27	WKP25S	10	●	004	7721809	**20,30**
ENMX08T316R-D27	WKP35G	10	●	004	7721811	**24,35**
ENMX08T316R-D27	WKP35S	10	●	004	7721810	**20,30**
ENMX08T316R-D27	WSM35G	10	●	004	8284986	**21,32**
ENMX08T316R-D27	WSM35S	10	■	004	7721812*	**21,32**
ENMX08T316R-D27	WSP45G	10	●	004	7924228	**21,32**
ENMX08T316R-F47	WHH15X	10	●	004	7960086	**22,32**
ENMX08T316R-F47	WKP25S	10	●	004	7721816	**20,30**
ENMX08T316R-F47	WKP35G	10	●	004	7721818	**24,35**
ENMX08T316R-F47	WKP35S	10	●	004	7721817	**20,30**
ENMX08T316R-F47	WSM35G	10	●	004	8284987	**21,32**
ENMX08T316R-F47	WSM35S	10	■	004	7721819*	**21,32**
ENMX08T316R-F47	WSM45X	10	●	004	7722666	**25,80**
ENMX08T316R-F47	WSP45G	10	●	004	7924229	**21,32**
EP2021302-M2	THL	1	●	TH4	6432489	**65,80**
EP2021302-M2.5	THL	1	●	TH4	6432490	**56,70**
EP2021302-M3	THL	1	●	TH4	6432491	**51,20**
EP2021302-M4	THL	1	●	TH4	6432492	**47,50**
EP2021302-M5	THL	1	●	TH4	6432493	**51,20**
EP2021302-M6	THL	1	●	TH4	6432494	**58,50**
EP2021302-M8	THL	1	●	TH4	6432495	**73,20**
EP2021302-M10	THL	1	●	TH4	6432496	**87,80**
EP2021305-M2	TIN	1	●	TH4	6432497	**59,90**
EP2021305-M2.5	TIN	1	●	TH4	6432498	**51,50**
EP2021305-M3	TIN	1	●	TH4	6432499	**46,50**
EP2021305-M4	TIN	1	●	TH4	6432500	**43,20**
EP2021305-M5	TIN	1	●	TH4	6432501	**46,50**
EP2021305-M6	TIN	1	●	TH4	6432502	**53,20**
EP2021305-M8	TIN	1	●	TH4	6432503	**66,50**
EP2021305-M10	TIN	1	●	TH4	6432504	**79,80**
EP2021342-M6	THL	1	●	TH5	6432505	**87,80**
EP2021342-M8	THL	1	●	TH5	6432506	**110,00**
EP2021342-M10	THL	1	●	TH5	6432507	**132,00**
EP2021382-M3	THL	1	●	TH4	6432508	**51,20**
EP2021382-M4	THL	1	●	TH4	6432509	**47,50**
EP2021382-M5	THL	1	●	TH4	6432510	**51,20**
EP2021382-M6	THL	1	●	TH4	6432511	**58,50**
EP2021382-M8	THL	1	●	TH4	6432512	**73,20**
EP2021382-M10	THL	1	●	TH4	6432513	**87,80**
EP2023302-M2	THL	1	●	TH4	6432514	**65,80**
EP2023302-M2.5	THL	1	●	TH4	6432515	**56,70**
EP2023302-M3	THL	1	●	TH4	6432516	**51,20**
EP2023302-M4	THL	1	●	TH4	6432517	**47,50**
EP2023302-M5	THL	1	●	TH4	6432518	**51,20**
EP2023302-M6	THL	1	●	TH4	6432519	**58,50**
EP2023302-M8	THL	1	●	TH4	6432520	**73,20**
EP2023302-M10	THL	1	●	TH4	6432521	**87,80**
EP2023305-M2	TIN	1	●	TH4	6584024	**59,90**
EP2023305-M2.5	TIN	1	●	TH4	6584025	**51,60**
EP2023305-M3	TIN	1	●	TH4	6584026	**46,50**
EP2023305-M4	TIN	1	●	TH4	6584027	**43,20**
EP2023305-M5	TIN	1	●	TH4	6584028	**46,60**
EP2023305-M6	TIN	1	●	TH4	6432522	**53,20**
EP2023305-M8	TIN	1	●	TH4	6432523	**66,50**
EP2023305-M10	TIN	1	●	TH4	6432524	**79,80**
EP2026302-M12	THL	1	●	TH4	6432525	**108,00**
EP2026302-M14	THL	1	●	TH4	6432526	**123,00**
EP2026302-M16	THL	1	●	TH4	6432527	**138,00**
EP2026302-M18	THL	1	●	TH4	6432528	**161,00**
EP2026302-M20	THL	1	●	TH4	6432529	**184,00**
EP2026302-M24	THL	1	●	TH4	6432530	**246,00**
EP2026302-M27	THL	1	●	TH4	6432531	**338,00**
EP2026302-M30	THL	1	●	TH4	6432532	**399,00**
EP2026305-M12	TIN	1	●	TH4	6432533	**97,70**
EP2026305-M14	TIN	1	●	TH4	6432534	**112,00**

Bezeichnung / Designation	Sorte / Grade	VE / US		Disc. Gr.	Article No.	EURO Stück / piece
EP2026305-M16	TIN	1	●	TH4	6432535	**126,00**
EP2026305-M18	TIN	1	●	TH4	6432536	**147,00**
EP2026305-M20	TIN	1	●	TH4	6432537	**168,00**
EP2026305-M24	TIN	1	●	TH4	6432538	**223,00**
EP2026342-M12	THL	1	●	TH5	6432539	**161,00**
EP2026342-M16	THL	1	●	TH5	6432540	**207,00**
EP2026382-M12	THL	1	●	TH4	6432541	**108,00**
EP2026382-M16	THL	1	●	TH4	6432542	**138,00**
EP2026382-M20	THL	1	●	TH4	6432543	**184,00**
EP2028302-M12	THL	1	●	TH4	6432544	**108,00**
EP2028302-M14	THL	1	●	TH4	6432545	**123,00**
EP2028302-M16	THL	1	●	TH4	6432546	**138,00**
EP2028305-M12	TIN	1	●	TH4	6432547	**97,70**
EP2028305-M14	TIN	1	●	TH4	6432548	**112,00**
EP2028305-M16	TIN	1	●	TH4	6432549	**126,00**
EP2051302-M2	THL	1	●	TH4	6245532	**72,40**
EP2051302-M2.5	THL	1	●	TH4	6245533	**62,30**
EP2051302-M3	THL	1	●	TH4	6245534	**56,30**
EP2051302-M4	THL	1	●	TH4	6245535	**52,30**
EP2051302-M5	THL	1	●	TH4	6245536	**56,30**
EP2051302-M6	THL	1	●	TH4	6245537	**64,40**
EP2051302-M8	THL	1	●	TH4	6245538	**80,50**
EP2051302-M10	THL	1	●	TH4	6245539	**96,50**
EP2051305-M2	TIN	1	●	TH4	6245573	**65,80**
EP2051305-M2.5	TIN	1	●	TH4	6245574	**56,70**
EP2051305-M3	TIN	1	●	TH4	6245575	**51,20**
EP2051305-M4	TIN	1	●	TH4	6245576	**47,50**
EP2051305-M5	TIN	1	●	TH4	6245577	**51,20**
EP2051305-M6	TIN	1	●	TH4	6245578	**58,50**
EP2051305-M8	TIN	1	●	TH4	6245579	**73,20**
EP2051305-M10	TIN	1	●	TH4	6245580	**87,80**
EP2051312-M4	THL	1	●	TH5	6245587	**68,00**
EP2051312-M5	THL	1	●	TH5	6245588	**73,20**
EP2051312-M6	THL	1	●	TH5	6245589	**83,70**
EP2051312-M8	THL	1	●	TH5	6245590	**105,00**
EP2051312-M10	THL	1	●	TH5	6245591	**126,00**
EP2051342-M8	THL	1	●	TH5	6245596	**121,00**
EP2051342-M10	THL	1	●	TH5	6245597	**145,00**
EP2051352-M4	THL	1	●	TH5	6826818	**68,00**
EP2051352-M5	THL	1	●	TH5	6826819	**73,20**
EP2051352-M6	THL	1	●	TH5	6826930	**83,70**
EP2051352-M8	THL	1	●	TH5	6826931	**105,00**
EP2051352-M10	THL	1	●	TH5	6826932	**126,00**
EP2051362-M4	THL	1	●	TH4	6245611	**52,30**
EP2051362-M5	THL	1	●	TH4	6245612	**56,30**
EP2051362-M6	THL	1	●	TH4	6245613	**64,40**
EP2051362-M8	THL	1	●	TH4	6245614	**84,50**
EP2051362-M10	THL	1	●	TH4	6245615	**101,00**
EP2051382-M3	THL	1	●	TH4	6245600	**56,30**
EP2051382-M4	THL	1	●	TH4	6245601	**52,30**
EP2051382-M5	THL	1	●	TH4	6245602	**56,30**
EP2051382-M6	THL	1	●	TH4	6245603	**64,40**
EP2051382-M8	THL	1	●	TH4	6245604	**80,50**
EP2051382-M10	THL	1	●	TH4	6245605	**96,50**
EP2053302-M2	THL	1	●	TH4	6245620	**72,40**
EP2053302-M2.5	THL	1	●	TH4	6245621	**62,30**
EP2053302-M3	THL	1	●	TH4	6245622	**56,30**
EP2053302-M4	THL	1	●	TH4	6245623	**52,30**
EP2053302-M5	THL	1	●	TH4	6245624	**56,30**
EP2053302-M6	THL	1	●	TH4	6245625	**64,40**
EP2053302-M8	THL	1	●	TH4	6245626	**80,50**
EP2053302-M10	THL	1	●	TH4	6245627	**96,50**
EP2053305-M2	TIN	1	●	TH4	6245631	**65,80**
EP2053305-M2.5	TIN	1	●	TH4	6245632	**56,70**
EP2053305-M3	TIN	1	●	TH4	6245633	**51,20**
EP2053305-M4	TIN	1	●	TH4	6245634	**47,50**
EP2053305-M5	TIN	1	●	TH4	6245635	**51,20**
EP2053305-M6	TIN	1	●	TH4	6245636	**58,50**
EP2053305-M8	TIN	1	●	TH4	6245637	**73,20**
EP2053305-M10	TIN	1	●	TH4	6245638	**87,80**

Bezeichnung / Designation	Sorte / Grade	VE / US		Disc. Gr.	Article No.	EURO Stück / piece
EP2056302-M12	THL	1	●	TH4	6245560	118,00
EP2056302-M14	THL	1	●	TH4	6245561	135,00
EP2056302-M16	THL	1	●	TH4	6245562	152,00
EP2056302-M18	THL	1	●	TH4	6245563	177,00
EP2056302-M20	THL	1	●	TH4	6245564	203,00
EP2056302-M24	THL	1	●	TH4	6245565	270,00
EP2056302-M27	THL	1	●	TH4	6245566	313,00
EP2056302-M30	THL	1	●	TH4	6245567	355,00
EP2056302-M36	THL	1	●	TH4	6245568	608,00
EP2056302-M42	THL	1	●	TH4	6245569	885,00
EP2056302-M48	THL	1	●	TH4	6245570	1.204,00
EP2056302-M56	THL	1	●	TH4	6245571	1.629,00
EP2056302-M64	THL	1	●	TH4	6245572	2.147,00
EP2056305-M12	TIN	1	●	TH4	6245581	108,00
EP2056305-M14	TIN	1	●	TH4	6245582	123,00
EP2056305-M16	TIN	1	●	TH4	6245583	138,00
EP2056305-M18	TIN	1	●	TH4	6245584	161,00
EP2056305-M20	TIN	1	●	TH4	6245585	184,00
EP2056305-M24	TIN	1	●	TH4	6245586	246,00
EP2056312-M12	THL	1	●	TH5	6245592	154,00
EP2056312-M16	THL	1	●	TH5	6245593	198,00
EP2056312-M20	THL	1	●	TH5	6245594	264,00
EP2056312-M24	THL	1	●	TH5	6245595	351,00
EP2056342-M12	THL	1	●	TH5	6245598	177,00
EP2056342-M16	THL	1	●	TH5	6245599	228,00
EP2056352-M12	THL	1	●	TH5	6826933	154,00
EP2056352-M16	THL	1	●	TH5	6826934	198,00
EP2056352-M20	THL	1	●	TH5	6826935	264,00
EP2056362-M12	THL	1	●	TH4	6245616	118,00
EP2056362-M16	THL	1	●	TH4	6245617	152,00
EP2056362-M20	THL	1	●	TH4	6245618	203,00
EP2056362-M24	THL	1	●	TH4	6245619	283,00
EP2056382-M12	THL	1	●	TH4	6245606	118,00
EP2056382-M14	THL	1	●	TH4	6245607	135,00
EP2056382-M16	THL	1	●	TH4	6245608	152,00
EP2056382-M18	THL	1	●	TH4	6245609	177,00
EP2056382-M20	THL	1	●	TH4	6245610	203,00
EP2058302-M12	THL	1	●	TH4	6245628	118,00
EP2058302-M14	THL	1	●	TH4	6245629	135,00
EP2058302-M16	THL	1	●	TH4	6245630	152,00
EP2058305-M12	TIN	1	●	TH4	6245639	108,00
EP2058305-M14	TIN	1	●	TH4	6245640	123,00
EP2058305-M16	TIN	1	●	TH4	6245641	138,00
EP2126302-M6X0.75	THL	1	●	TH4	6432550	64,40
EP2126302-M8X1	THL	1	●	TH4	6432551	80,50
EP2126302-M10X1	THL	1	●	TH4	6432552	96,50
EP2126302-M10X1.25	THL	1	●	TH4	6432553	96,50
EP2126302-M12X1	THL	1	●	TH4	6432554	118,00
EP2126302-M12X1.25	THL	1	●	TH4	6432555	118,00
EP2126302-M12X1.5	THL	1	●	TH4	6432556	118,00
EP2126302-M14X1.5	THL	1	●	TH4	6432557	135,00
EP2126302-M16X1.5	THL	1	●	TH4	6432558	152,00
EP2126302-M18X1.5	THL	1	●	TH4	6432559	177,00
EP2126302-M20X1.5	THL	1	●	TH4	6432560	203,00
EP2126302-M22X1.5	THL	1	●	TH4	6432561	237,00
EP2126342-M8X1	THL	1	○	TH4	6584029	121,00
EP2126342-M10X1	THL	1	●	TH4	6432562	145,00
EP2126342-M10X1.25	THL	1	●	TH4	6432563	145,00
EP2126342-M12X1	THL	1	●	TH4	6432564	177,00
EP2126342-M12X1.25	THL	1	●	TH4	6432565	177,00
EP2126342-M12X1.5	THL	1	●	TH4	6432566	177,00
EP2126342-M14X1.5	THL	1	●	TH4	6432567	203,00
EP2126342-M16X1.5	THL	1	●	TH4	6432568	228,00
EP2126342-M18X1.5	THL	1	●	TH4	6432569	266,00
EP2126342-M20X1.5	THL	1	●	TH4	6584030	304,00
EP2156302-M6X0.75	THL	1	●	TH4	6245642	70,80
EP2156302-M8X1	THL	1	●	TH4	6245643	88,50
EP2156302-M10X1	THL	1	●	TH4	6245644	106,00
EP2156302-M10X1.25	THL	1	●	TH4	6245645	106,00
EP2156302-M12X1	THL	1	●	TH4	6245646	130,00

Bezeichnung / Designation	Sorte / Grade	VE / US		Disc. Gr.	Article No.	EURO Stück / piece
EP2156302-M12X1.25	THL	1	●	TH4	6245647	130,00
EP2156302-M12X1.5	THL	1	●	TH4	6245648	130,00
EP2156302-M14X1.25	THL	1	●	TH4	7171536	149,00
EP2156302-M14X1.5	THL	1	●	TH4	6245649	149,00
EP2156302-M16X1.5	THL	1	●	TH4	6245650	167,00
EP2156302-M18X1.5	THL	1	●	TH4	6245651	195,00
EP2156302-M20X1.5	THL	1	●	TH4	6245652	223,00
EP2156302-M22X1.5	THL	1	●	TH4	6245653	260,00
EP2156312-M8X1	THL	1	●	TH5	6245654	115,00
EP2156312-M10X1	THL	1	●	TH5	6245655	138,00
EP2156312-M10X1.25	THL	1	●	TH5	6245656	138,00
EP2156312-M12X1	THL	1	●	TH5	6245657	169,00
EP2156312-M12X1.25	THL	1	●	TH5	6245658	169,00
EP2156312-M12X1.5	THL	1	●	TH5	6245659	169,00
EP2156312-M14X1.5	THL	1	●	TH5	6245660	193,00
EP2156312-M16X1.5	THL	1	●	TH5	6245661	217,00
EP2156312-M18X1.5	THL	1	●	TH5	6245662	254,00
EP2156312-M20X1.5	THL	1	●	TH5	6245663	290,00
EP2156362-M8X1	THL	1	●	TH4	6245664	92,90
EP2156362-M10X1	THL	1	●	TH4	6245665	112,00
EP2156362-M12X1.5	THL	1	●	TH4	6245666	130,00
EP2156362-M14X1.5	THL	1	●	TH4	6245667	149,00
EP2221302-UNC2	THL	1	●	TH4	6432570	62,20
EP2221302-UNC4	THL	1	●	TH4	6432571	53,00
EP2221302-UNC6	THL	1	●	TH4	6432572	49,40
EP2221302-UNC8	THL	1	●	TH4	6432573	47,50
EP2221302-UNC10	THL	1	●	TH4	6432574	51,20
EP2221302-UNC1/4	THL	1	●	TH4	6432575	58,50
EP2226302-UNC5/16	THL	1	●	TH4	6432576	73,20
EP2226302-UNC3/8	THL	1	●	TH4	6432577	87,80
EP2226302-UNC1/2	THL	1	●	TH4	6432578	108,00
EP2226302-UNC5/8	THL	1	●	TH4	6432579	138,00
EP2251302-UNC2	THL	1	●	TH4	6245668	68,40
EP2251302-UNC4	THL	1	●	TH4	6245669	58,30
EP2251302-UNC6	THL	1	●	TH4	6245670	54,30
EP2251302-UNC8	THL	1	●	TH4	6245671	52,30
EP2251302-UNC10	THL	1	●	TH4	6245672	56,30
EP2251302-UNC1/4	THL	1	●	TH4	6245673	64,40
EP2251312-UNC1/4	THL	1	●	TH5	6245678	83,70
EP2256302-UNC5/16	THL	1	●	TH4	6245674	80,50
EP2256302-UNC3/8	THL	1	●	TH4	6245675	96,50
EP2256302-UNC1/2	THL	1	●	TH4	6245676	118,00
EP2256302-UNC5/8	THL	1	●	TH4	6245677	152,00
EP2256312-UNC5/16	THL	1	●	TH5	6245679	105,00
EP2256312-UNC3/8	THL	1	●	TH5	6245680	126,00
EP2256312-UNC1/2	THL	1	●	TH5	6245681	154,00
EP2256312-UNC5/8	THL	1	●	TH5	6245682	198,00
EP2256312-UNC3/4	THL	1	●	TH5	6245683	247,00
EP2321302-UNF4	THL	1	●	TH4	6432580	58,30
EP2321302-UNF6	THL	1	●	TH4	6432581	54,30
EP2321302-UNF8	THL	1	●	TH4	6432582	52,30
EP2321302-UNF10	THL	1	●	TH4	6432583	56,30
EP2321302-UNF1/4	THL	1	●	TH4	6432584	64,40
EP2326302-UNF5/16	THL	1	●	TH4	6432585	80,50
EP2326302-UNF3/8	THL	1	●	TH4	6432586	96,50
EP2326302-UNF1/2	THL	1	●	TH4	6432587	118,00
EP2326302-UNF5/8	THL	1	●	TH4	6432588	152,00
EP2351302-UNF4	THL	1	●	TH4	6245684	64,20
EP2351302-UNF6	THL	1	●	TH4	6245685	59,80
EP2351302-UNF8	THL	1	●	TH4	6245686	57,50
EP2351302-UNF10	THL	1	●	TH4	6245687	62,00
EP2351302-UNF1/4	THL	1	●	TH4	6245688	70,80
EP2351312-UNF1/4	THL	1	●	TH5	6245693	92,10
EP2356302-UNF5/16	THL	1	●	TH4	6245689	88,50
EP2356302-UNF3/8	THL	1	●	TH4	6245690	106,00
EP2356302-UNF1/2	THL	1	●	TH4	6245691	130,00
EP2356302-UNF5/8	THL	1	●	TH4	6245692	167,00
EP2356312-UNF5/16	THL	1	●	TH5	6245694	115,00
EP2356312-UNF3/8	THL	1	●	TH5	6245695	138,00
EP2356312-UNF1/2	THL	1	●	TH5	6245696	169,00

Bezeichnung / Designation	Sorte / Grade	VE / US		Disc. Gr.	Article No.	EURO Stück / piece
EP2356312-UNF5/8	THL	1	●	TH5	6245697	217,00
EP2426302-G1/8	THL	1	●	TH4	6432589	83,40
EP2426302-G1/4	THL	1	●	TH4	6432590	109,00
EP2426302-G3/8	THL	1	●	TH4	6432591	131,00
EP2426302-G1/2	THL	1	●	TH4	6432592	175,00
EP2426302-G5/8	THL	1	●	TH4	6432593	204,00
EP2426302-G3/4	THL	1	●	TH4	6432594	306,00
EP2426302-G1	THL	1	●	TH4	6432595	459,00
EP2456302-G1/8	THL	1	●	TH4	6245698	91,70
EP2456302-G1/4	THL	1	●	TH4	6245699	120,00
EP2456302-G3/8	THL	1	●	TH4	6245700	144,00
EP2456302-G1/2	THL	1	●	TH4	6245701	193,00
EP2456302-G5/8	THL	1	●	TH4	6245702	225,00
EP2456302-G3/4	THL	1	●	TH4	6245703	336,00
EP2456302-G1	THL	1	●	TH4	6245704	504,00
F1131-1		1	●	RH1	5071500	42,00
F1131-1.2		1	○	RH1	5071502	39,00
F1131-1.4		1	○	RH1	5071504	34,70
F1131-1.5		1	●	RH1	5071505	33,30
F1131-1.6		1	●	RH1	5071506	35,00
F1131-1.7		1	○	RH1	5071507	37,60
F1131-1.8		1	○	RH1	5071508	36,30
F1131-1.9		1	○	RH1	5071509	38,60
F1131-2		1	●	RH1	5071530	30,20
F1131-2.1		1	●	RH1	5071531	31,60
F1131-2.2		1	●	RH1	5071532	36,30
F1131-2.3		1	●	RH1	5071533	37,00
F1131-2.4		1	●	RH1	5071534	31,60
F1131-2.5		1	●	RH1	5071536	29,90
F1131-2.6		1	●	RH1	5071537	32,40
F1131-2.7		1	●	RH1	5071538	37,60
F1131-2.8		1	●	RH1	5071539	37,00
F1131-2.9		1	●	RH1	5071540	33,30
F1131-3		1	●	RH1	5071561	31,60
F1131-3.1		1	●	RH1	5071562	39,90
F1131-3.2		1	●	RH1	5071563	39,00
F1131-3.3		1	●	RH1	5071564	38,30
F1131-3.4		1	●	RH1	5071565	37,60
F1131-3.5		1	●	RH1	5071566	37,00
F1131-3.6		1	●	RH1	5071567	38,30
F1131-3.7		1	●	RH1	5071568	36,70
F1131-3.8		1	●	RH1	5071569	36,70
F1131-3.9		1	○	RH1	5071570	36,70
F1131-4		1	●	RH1	5071581	27,30
F1131-4.1		1	●	RH1	5071582	35,00
F1131-4.2		1	●	RH1	5071583	36,30
F1131-4.3		1	●	RH1	5071584	37,60
F1131-4.4		1	●	RH1	5071585	37,60
F1131-4.5		1	●	RH1	5071586	32,40
F1131-4.6		1	●	RH1	5071587	36,70
F1131-4.7		1	○	RH1	5071588	36,70
F1131-4.8		1	●	RH1	5071589	35,00
F1131-4.9		1	●	RH1	5071590	36,30
F1131-5		1	●	RH1	5071601	31,60
F1131-5.1		1	●	RH1	5071602	35,00
F1131-5.2		1	●	RH1	5071603	37,00
F1131-5.4		1	○	RH1	5071605	38,30
F1131-5.5		1	●	RH1	5071606	33,70
F1131-5.6		1	●	RH1	5071607	38,30
F1131-5.7		1	●	RH1	5071608	37,00
F1131-5.8		1	●	RH1	5071609	36,30
F1131-5.9		1	●	RH1	5071610	36,70
F1131-6		1	●	RH1	5071612	30,20
F1131-6.1		1	●	RH1	5071613	34,70
F1131-6.2		1	●	RH1	5071614	36,70
F1131-6.3		1	●	RH1	5071615	36,70
F1131-6.4		1	●	RH1	5071616	36,70
F1131-6.5		1	●	RH1	5071617	33,70
F1131-6.6		1	●	RH1	5071618	38,60
F1131-6.7		1	○	RH1	5071619	41,00

Bezeichnung / Designation	Sorte / Grade	VE / US		Disc. Gr.	Article No.	EURO Stück / piece
F1131-6.8		1	●	RH1	5071620	39,00
F1131-6.9		1	●	RH1	5071621	38,60
F1131-7		1	●	RH1	5071622	33,30
F1131-7.1		1	●	RH1	5071624	36,70
F1131-7.2		1	●	RH1	5071625	38,60
F1131-7.3		1	●	RH1	5071626	42,00
F1131-7.4		1	●	RH1	5071627	39,00
F1131-7.5		1	●	RH1	5071628	36,70
F1131-7.7		1	●	RH1	5071630	42,00
F1131-7.8		1	●	RH1	5071631	38,60
F1131-7.9		1	●	RH1	5071632	39,00
F1131-8		1	●	RH1	5071633	34,70
F1131-8.1		1	●	RH1	5071634	37,60
F1131-8.2		1	●	RH1	5071635	40,30
F1131-8.3		1	●	RH1	5071636	42,30
F1131-8.4		1	●	RH1	5071637	42,90
F1131-8.5		1	●	RH1	5071638	38,30
F1131-8.7		1	○	RH1	5071640	44,90
F1131-8.8		1	○	RH1	5071641	45,50
F1131-8.9		1	○	RH1	5071642	44,90
F1131-9		1	●	RH1	5071643	39,00
F1131-9.1		1	●	RH1	5071644	44,90
F1131-9.2		1	○	RH1	5071645	44,90
F1131-9.3		1	○	RH1	5071646	45,50
F1131-9.4		1	○	RH1	5071647	45,50
F1131-9.5		1	○	RH1	5071648	42,00
F1131-9.6		1	○	RH1	5071649	46,60
F1131-9.7		1	○	RH1	5071650	46,60
F1131-9.8		1	●	RH1	5071651	46,60
F1131-10		1	●	RH1	5071510	39,00
F1131-10.5		1	●	RH1	5071511	46,60
F1131-11		1	●	RH1	5071512	44,20
F1131-11.5		1	○	RH1	5071513	52,80
F1131-12		1	●	RH1	5071514	46,60
F1131-12.5		1	●	RH1	5071515	68,70
F1131-13		1	●	RH1	5071516	68,70
F1131-13.5		1	●	RH1	5071517	82,50
F1131-14		1	●	RH1	5071518	75,30
F1131-14.5		1	●	RH1	5071519	82,50
F1131-15		1	●	RH1	5071520	80,60
F1131-16		1	●	RH1	5071522	83,90
F1131-16.5		1	●	RH1	5071523	99,10
F1131-17		1	●	RH1	5071524	87,80
F1131-18		1	●	RH1	5071526	97,10
F1131-18.5		1	○	RH1	5071527	126,00
F1131-19		1	●	RH1	5071528	106,00
F1131-19.5		1	○	RH1	5071529	124,00
F1131-20		1	●	RH1	5071541	102,00
F1131-20.5		1	○	RH1	5071542	118,00
F1131-21		1	●	RH1	5071543	123,00
F1131-21.5		1	○	RH1	5071544	118,00
F1131-22		1	●	RH1	5071545	118,00
F1131-23		1	●	RH1	5071547	136,00
F1131-25		1	●	RH1	5071551	140,00
F1131-26		1	○	RH1	5071553	149,00
F1131-28		1	○	RH1	5071557	190,00
F1131-30		1	●	RH1	5071571	201,00
F1131-32		1	●	RH1	5071573	221,00
F1231-8		1	●	RH1	5071693	89,20
F1231-9		1	○	RH1	5071694	93,80
F1231-10		1	●	RH1	5071676	94,40
F1231-11		1	○	RH1	5071677	117,00
F1231-12		1	●	RH1	5071678	110,00
F1231-13		1	○	RH1	5071679	127,00
F1231-14		1	○	RH1	5071680	129,00
F1231-15		1	●	RH1	5071681	135,00
F1231-16		1	●	RH1	5071682	168,00
F1231-17		1	○	RH1	5071683	211,00
F1231-18		1	●	RH1	5071684	177,00
F1231-19		1	○	RH1	5071685	182,00

Bezeichnung / Designation	Sorte / Grade	VE / US		Disc. Gr.	Article No.	EURO Stück / piece
F1231-20		1	●	RH1	5071686	188,00
F1231-22		1	○	RH1	5071687	221,00
F1231-24		1	○	RH1	5071688	246,00
F1231-25		1	●	RH1	5071689	246,00
F1231-26		1	○	RH1	5071690	276,00
F1231-28		1	○	RH1	5071691	305,00
F1231-30		1	○	RH1	5071692	317,00
F1342-1		1	●	RH1	5071695	29,90
F1342-1.1		1	●	RH1	5071696	31,60
F1342-1.2		1	●	RH1	5071697	31,10
F1342-1.3		1	●	RH1	5071698	33,30
F1342-1.4		1	●	RH1	5071699	27,80
F1342-1.5		1	●	RH1	5071700	25,20
F1342-1.6		1	●	RH1	5071701	27,30
F1342-1.7		1	●	RH1	5071702	27,30
F1342-1.8		1	●	RH1	5071703	29,00
F1342-1.9		1	●	RH1	5071704	29,00
F1342-2		1	●	RH1	5071733	24,31
F1342-2.1		1	●	RH1	5071734	28,60
F1342-2.2		1	●	RH1	5071735	29,50
F1342-2.3		1	●	RH1	5071736	32,00
F1342-2.4		1	●	RH1	5071737	29,00
F1342-2.5		1	●	RH1	5071738	23,97
F1342-2.6		1	●	RH1	5071739	29,90
F1342-2.7		1	●	RH1	5071740	29,90
F1342-2.8		1	●	RH1	5071741	29,90
F1342-2.9		1	●	RH1	5071742	29,90
F1342-3		1	●	RH1	5071744	21,38
F1342-3.1		1	●	RH1	5071745	28,60
F1342-3.2		1	●	RH1	5071746	28,10
F1342-3.3		1	●	RH1	5071747	29,50
F1342-3.4		1	●	RH1	5071748	29,50
F1342-3.5		1	●	RH1	5071749	24,31
F1342-3.6		1	●	RH1	5071750	31,10
F1342-3.7		1	●	RH1	5071751	34,70
F1342-3.8		1	●	RH1	5071752	28,10
F1342-3.9		1	●	RH1	5071753	31,10
F1342-4		1	●	RH1	5071754	23,55
F1342-4.1		1	●	RH1	5071755	29,50
F1342-4.2		1	●	RH1	5071756	29,50
F1342-4.3		1	●	RH1	5071757	29,50
F1342-4.4		1	●	RH1	5071758	29,50
F1342-4.5		1	●	RH1	5071759	25,20
F1342-4.6		1	●	RH1	5071760	31,60
F1342-4.7		1	●	RH1	5071761	31,60
F1342-4.8		1	●	RH1	5071762	31,60
F1342-4.9		1	●	RH1	5071763	31,60
F1342-5		1	●	RH1	5071764	24,31
F1342-5.1		1	●	RH1	5071765	31,60
F1342-5.2		1	●	RH1	5071766	33,30
F1342-5.3		1	●	RH1	5071767	33,30
F1342-5.4		1	●	RH1	5071768	31,60
F1342-5.5		1	●	RH1	5071769	29,00
F1342-5.6		1	●	RH1	5071770	31,60
F1342-5.7		1	●	RH1	5071771	31,60
F1342-5.8		1	●	RH1	5071772	31,60
F1342-5.9		1	●	RH1	5071773	31,60
F1342-6		1	●	RH1	5071774	25,60
F1342-6.1		1	●	RH1	5071775	31,60
F1342-6.2		1	●	RH1	5071776	31,60
F1342-6.3		1	●	RH1	5071777	32,00
F1342-6.4		1	●	RH1	5071778	32,00
F1342-6.5		1	●	RH1	5071779	31,10
F1342-6.6		1	●	RH1	5071780	33,30
F1342-6.7		1	●	RH1	5071781	34,30
F1342-6.8		1	●	RH1	5071782	34,30
F1342-6.9		1	●	RH1	5071783	36,30
F1342-7		1	●	RH1	5071784	29,90
F1342-7.1		1	●	RH1	5071785	36,30
F1342-7.2		1	●	RH1	5071786	36,30

Bezeichnung / Designation	Sorte / Grade	VE / US		Disc. Gr.	Article No.	EURO Stück / piece
F1342-7.3		1	●	RH1	5071787	37,00
F1342-7.4		1	●	RH1	5071788	37,00
F1342-7.5		1	●	RH1	5071789	37,00
F1342-7.6		1	●	RH1	5071790	37,00
F1342-7.7		1	●	RH1	5071791	37,00
F1342-7.8		1	●	RH1	5071792	37,00
F1342-7.9		1	●	RH1	5071793	37,00
F1342-8		1	●	RH1	5071794	32,00
F1342-8.1		1	●	RH1	5071795	44,90
F1342-8.2		1	●	RH1	5071796	44,90
F1342-8.3		1	●	RH1	5071797	44,90
F1342-8.4		1	●	RH1	5071798	44,90
F1342-8.5		1	●	RH1	5071799	40,30
F1342-8.6		1	●	RH1	5071800	41,00
F1342-8.7		1	●	RH1	5071801	41,00
F1342-8.8		1	●	RH1	5071802	41,00
F1342-8.9		1	●	RH1	5071803	41,00
F1342-9		1	●	RH1	5071804	37,00
F1342-9.1		1	●	RH1	5071805	42,60
F1342-9.2		1	●	RH1	5071806	42,60
F1342-9.3		1	●	RH1	5071807	42,60
F1342-9.4		1	●	RH1	5071808	44,20
F1342-9.5		1	●	RH1	5071809	42,30
F1342-9.6		1	●	RH1	5071810	44,90
F1342-9.7		1	●	RH1	5071811	44,90
F1342-9.8		1	●	RH1	5071812	44,90
F1342-9.9		1	●	RH1	5071813	44,90
F1342-10		1	●	RH1	5071705	38,30
F1342-10.1		1	●	RH1	5071706	52,80
F1342-10.2		1	●	RH1	5071707	52,80
F1342-10.3		1	●	RH1	5071708	52,80
F1342-10.4		1	●	RH1	5071709	52,80
F1342-10.5		1	●	RH1	5071710	50,50
F1342-10.6		1	●	RH1	5071711	57,80
F1342-10.7		1	●	RH1	5071712	57,80
F1342-10.8		1	●	RH1	5071713	58,40
F1342-10.9		1	●	RH1	5071714	59,10
F1342-11		1	●	RH1	5071715	53,50
F1342-11.5		1	●	RH1	5071716	61,10
F1342-12		1	●	RH1	5071717	56,80
F1342-12.5		1	●	RH1	5071718	61,10
F1342-13		1	●	RH1	5071719	62,70
F1342-13.5		1	●	RH1	5071720	63,40
F1342-14		1	●	RH1	5071721	63,40
F1342-14.5		1	●	RH1	5071722	67,40
F1342-15		1	●	RH1	5071723	67,40
F1342-15.5		1	●	RH1	5071724	68,70
F1342-16		1	●	RH1	5071725	68,70
F1342-16.5		1	●	RH1	5071726	80,60
F1342-17		1	●	RH1	5071727	81,20
F1342-17.5		1	●	RH1	5071728	83,90
F1342-18		1	●	RH1	5071729	84,50
F1342-18.5		1	●	RH1	5071730	96,40
F1342-19		1	●	RH1	5071731	97,10
F1342-19.5		1	●	RH1	5071732	91,20
F1342-20		1	●	RH1	5071743	91,20
F1352-0.9		1	●	RH1	5071814	29,50
F1352-1		1	●	RH1	5071815	29,00
F1352-1.1		1	●	RH1	5071816	30,40
F1352-1.2		1	●	RH1	5071817	28,60
F1352-1.3		1	●	RH1	5071818	31,60
F1352-1.4		1	●	RH1	5071819	26,00
F1352-1.5		1	●	RH1	5071820	23,92
F1352-1.6		1	●	RH1	5071821	26,60
F1352-1.7		1	●	RH1	5071822	26,60
F1352-1.8		1	●	RH1	5071823	26,60
F1352-1.9		1	●	RH1	5071824	26,60
F1352-2		1	●	RH1	5071856	23,43
F1352-2.1		1	●	RH1	5071857	28,60
F1352-2.2		1	●	RH1	5071858	28,60

Bezeichnung / Designation	Sorte / Grade	VE / US		Disc. Gr.	Article No.	EURO Stück / piece
F1352-2.3		1	●	RH1	5071859	28,60
F1352-2.4		1	●	RH1	5071860	28,60
F1352-2.5		1	●	RH1	5071861	23,43
F1352-2.6		1	●	RH1	5071862	29,50
F1352-2.7		1	●	RH1	5071863	29,50
F1352-2.8		1	●	RH1	5071864	29,50
F1352-2.9		1	●	RH1	5071865	29,50
F1352-3		1	●	RH1	5071867	21,32
F1352-3.1		1	●	RH1	5071868	28,20
F1352-3.2		1	●	RH1	5071869	28,20
F1352-3.3		1	●	RH1	5071870	28,20
F1352-3.4		1	●	RH1	5071871	28,20
F1352-3.5		1	●	RH1	5071872	24,39
F1352-3.6		1	●	RH1	5071873	30,80
F1352-3.7		1	●	RH1	5071874	30,80
F1352-3.8		1	●	RH1	5071875	30,80
F1352-3.9		1	●	RH1	5071876	30,80
F1352-4		1	●	RH1	5071877	23,43
F1352-4.1		1	●	RH1	5071878	29,00
F1352-4.2		1	●	RH1	5071879	29,00
F1352-4.3		1	●	RH1	5071880	29,00
F1352-4.4		1	●	RH1	5071881	29,00
F1352-4.5		1	●	RH1	5071882	24,39
F1352-4.6		1	●	RH1	5071883	31,60
F1352-4.7		1	●	RH1	5071884	31,60
F1352-4.8		1	●	RH1	5071885	31,60
F1352-4.9		1	●	RH1	5071886	31,60
F1352-5		1	●	RH1	5071887	23,92
F1352-5.1		1	●	RH1	5071888	31,60
F1352-5.2		1	●	RH1	5071889	31,60
F1352-5.3		1	●	RH1	5071890	31,60
F1352-5.4		1	●	RH1	5071891	31,60
F1352-5.5		1	●	RH1	5071892	29,00
F1352-5.6		1	●	RH1	5071893	31,60
F1352-5.7		1	●	RH1	5071894	31,60
F1352-5.8		1	●	RH1	5071895	31,60
F1352-5.9		1	●	RH1	5071896	31,60
F1352-6		1	●	RH1	5071897	24,70
F1352-6.1		1	●	RH1	5071898	31,60
F1352-6.2		1	●	RH1	5071899	31,60
F1352-6.3		1	●	RH1	5071900	31,60
F1352-6.4		1	●	RH1	5071901	31,60
F1352-6.5		1	●	RH1	5071902	30,40
F1352-6.6		1	●	RH1	5071903	31,60
F1352-6.7		1	●	RH1	5071904	31,60
F1352-6.8		1	●	RH1	5071905	32,20
F1352-6.9		1	●	RH1	5071906	32,20
F1352-7		1	●	RH1	5071907	30,40
F1352-7.1		1	●	RH1	5071908	35,30
F1352-7.2		1	●	RH1	5071909	35,30
F1352-7.3		1	●	RH1	5071910	35,30
F1352-7.4		1	●	RH1	5071911	35,30
F1352-7.5		1	●	RH1	5071912	34,30
F1352-7.6		1	●	RH1	5071913	37,30
F1352-7.7		1	●	RH1	5071914	37,30
F1352-7.8		1	●	RH1	5071915	37,30
F1352-7.9		1	●	RH1	5071916	37,30
F1352-8		1	●	RH1	5071917	31,60
F1352-8.1		1	●	RH1	5071918	44,90
F1352-8.2		1	●	RH1	5071919	44,90
F1352-8.3		1	●	RH1	5071920	44,90
F1352-8.4		1	●	RH1	5071921	44,90
F1352-8.5		1	●	RH1	5071922	39,60
F1352-8.6		1	●	RH1	5071923	40,60
F1352-8.7		1	●	RH1	5071924	40,60
F1352-8.8		1	●	RH1	5071925	40,60
F1352-8.9		1	●	RH1	5071926	40,60
F1352-9		1	●	RH1	5071927	37,00
F1352-9.1		1	●	RH1	5071928	42,60
F1352-9.2		1	●	RH1	5071929	42,60

Bezeichnung / Designation	Sorte / Grade	VE / US		Disc. Gr.	Article No.	EURO Stück / piece
F1352-9.3		1	●	RH1	5071930	42,60
F1352-9.4		1	●	RH1	5071931	42,60
F1352-9.5		1	●	RH1	5071932	41,00
F1352-9.6		1	●	RH1	5071933	43,60
F1352-9.7		1	●	RH1	5071934	43,60
F1352-9.8		1	●	RH1	5071935	43,60
F1352-9.9		1	●	RH1	5071936	43,60
F1352-10		1	●	RH1	5071825	37,30
F1352-10.1		1	●	RH1	5071826	52,20
F1352-10.2		1	●	RH1	5071827	52,20
F1352-10.3		1	●	RH1	5071828	52,20
F1352-10.4		1	●	RH1	5071829	52,20
F1352-10.5		1	●	RH1	5071830	48,90
F1352-10.6		1	●	RH1	5071831	56,80
F1352-10.7		1	●	RH1	5071832	56,80
F1352-10.8		1	●	RH1	5071833	56,80
F1352-10.9		1	●	RH1	5071837	56,80
F1352-11		1	●	RH1	5071838	52,20
F1352-11.5		1	●	RH1	5071839	61,10
F1352-12		1	●	RH1	5071840	56,10
F1352-12.5		1	●	RH1	5071841	63,70
F1352-13		1	●	RH1	5071842	61,10
F1352-13.5		1	●	RH1	5071843	63,70
F1352-14		1	●	RH1	5071844	63,70
F1352-14.5		1	●	RH1	5071845	68,00
F1352-15		1	●	RH1	5071846	65,10
F1352-15.5		1	●	RH1	5071847	70,00
F1352-16		1	●	RH1	5071848	68,00
F1352-16.5		1	●	RH1	5071849	81,90
F1352-17		1	●	RH1	5071850	79,20
F1352-17.5		1	●	RH1	5071851	83,90
F1352-18		1	●	RH1	5071852	82,50
F1352-18.5		1	●	RH1	5071853	98,40
F1352-19		1	●	RH1	5071854	95,70
F1352-19.5		1	●	RH1	5071855	92,50
F1352-20		1	●	RH1	5071866	91,80
F1352HUN-0.95		1	●	RH1	5071937	57,50
F1352HUN-0.97		1	●	RH1	5071938	57,50
F1352HUN-0.98		1	●	RH1	5071939	57,50
F1352HUN-0.99		1	●	RH1	5071940	57,50
F1352HUN-1		1	●	RH1	5071941	57,50
F1352HUN-1.01		1	●	RH1	5071942	57,50
F1352HUN-1.02		1	●	RH1	5071943	57,50
F1352HUN-1.03		1	●	RH1	5071944	57,50
F1352HUN-1.04		1	●	RH1	5071945	57,50
F1352HUN-1.05		1	●	RH1	5071946	57,50
F1352HUN-1.06		1	●	RH1	5071947	57,50
F1352HUN-1.07		1	●	RH1	5071948	57,50
F1352HUN-1.08		1	○	RH1	5071949	57,50
F1352HUN-1.09		1	○	RH1	5071950	57,50
F1352HUN-1.11		1	●	RH1	5071952	57,50
F1352HUN-1.12		1	●	RH1	5071953	57,50
F1352HUN-1.13		1	●	RH1	5071954	57,50
F1352HUN-1.14		1	○	RH1	5071955	57,50
F1352HUN-1.15		1	●	RH1	5071956	57,50
F1352HUN-1.16		1	○	RH1	5071957	57,50
F1352HUN-1.17		1	○	RH1	5071958	57,50
F1352HUN-1.18		1	●	RH1	5071959	57,50
F1352HUN-1.19		1	●	RH1	5071960	57,50
F1352HUN-1.2		1	●	RH1	5071961	57,50
F1352HUN-1.21		1	●	RH1	5071962	57,50
F1352HUN-1.22		1	●	RH1	5071963	57,50
F1352HUN-1.23		1	○	RH1	5071964	57,50
F1352HUN-1.24		1	○	RH1	5071965	57,50
F1352HUN-1.25		1	●	RH1	5071966	57,50
F1352HUN-1.26		1	●	RH1	5071967	57,50
F1352HUN-1.27		1	○	RH1	5071968	57,50
F1352HUN-1.28		1	○	RH1	5071969	57,50
F1352HUN-1.29		1	●	RH1	5071970	57,50
F1352HUN-1.3		1	●	RH1	5071971	57,50

Bezeichnung / Designation	Sorte / Grade	VE / US		Disc. Gr.	Article No.	EURO Stück / piece
F1352HUN-1.31		1	○	RH1	5071972	**57,50**
F1352HUN-1.32		1	●	RH1	5071973	**57,50**
F1352HUN-1.33		1	○	RH1	5071974	**57,50**
F1352HUN-1.34		1	○	RH1	5071975	**57,50**
F1352HUN-1.35		1	●	RH1	5071976	**57,50**
F1352HUN-1.36		1	○	RH1	5071977	**57,50**
F1352HUN-1.37		1	○	RH1	5071978	**57,50**
F1352HUN-1.38		1	○	RH1	5071979*	**57,50**
F1352HUN-1.39		1	○	RH1	5071980	**57,50**
F1352HUN-1.4		1	●	RH1	5071981	**53,50**
F1352HUN-1.41		1	●	RH1	5071982	**53,50**
F1352HUN-1.42		1	●	RH1	5071983	**53,50**
F1352HUN-1.43		1	○	RH1	5071984	**53,50**
F1352HUN-1.44		1	○	RH1	5071985	**53,50**
F1352HUN-1.45		1	●	RH1	5071986	**53,50**
F1352HUN-1.46		1	●	RH1	5071987	**53,50**
F1352HUN-1.47		1	●	RH1	5071988	**53,50**
F1352HUN-1.48		1	●	RH1	5071989	**53,50**
F1352HUN-1.49		1	●	RH1	5071990	**53,50**
F1352HUN-1.5		1	●	RH1	5071991	**50,50**
F1352HUN-1.51		1	●	RH1	5071992	**50,50**
F1352HUN-1.52		1	●	RH1	5071993	**50,50**
F1352HUN-1.53		1	●	RH1	5071994	**50,50**
F1352HUN-1.54		1	●	RH1	5071995	**50,50**
F1352HUN-1.55		1	●	RH1	5071996	**50,50**
F1352HUN-1.56		1	●	RH1	5071997	**50,50**
F1352HUN-1.57		1	●	RH1	5071998	**50,50**
F1352HUN-1.58		1	●	RH1	5071999	**50,50**
F1352HUN-1.59		1	●	RH1	5072000	**50,50**
F1352HUN-1.6		1	●	RH1	5072001	**50,50**
F1352HUN-1.61		1	●	RH1	5072002	**50,50**
F1352HUN-1.62		1	●	RH1	5072003	**50,50**
F1352HUN-1.63		1	●	RH1	5072004	**50,50**
F1352HUN-1.64		1	●	RH1	5072005	**50,50**
F1352HUN-1.65		1	●	RH1	5072006	**50,50**
F1352HUN-1.66		1	●	RH1	5072007	**50,50**
F1352HUN-1.67		1	●	RH1	5072008	**50,50**
F1352HUN-1.68		1	●	RH1	5072009	**50,50**
F1352HUN-1.69		1	●	RH1	5072010	**50,50**
F1352HUN-1.7		1	●	RH1	5072011	**50,50**
F1352HUN-1.71		1	○	RH1	5072012	**50,50**
F1352HUN-1.72		1	●	RH1	5072013	**50,50**
F1352HUN-1.73		1	●	RH1	5072014	**50,50**
F1352HUN-1.74		1	○	RH1	5072015	**50,50**
F1352HUN-1.75		1	●	RH1	5072016	**50,50**
F1352HUN-1.76		1	○	RH1	5072017	**50,50**
F1352HUN-1.77		1	○	RH1	5072018	**50,50**
F1352HUN-1.78		1	●	RH1	5072019	**50,50**
F1352HUN-1.79		1	●	RH1	5072020	**50,50**
F1352HUN-1.8		1	●	RH1	5072021	**50,50**
F1352HUN-1.81		1	●	RH1	5072022	**50,50**
F1352HUN-1.82		1	●	RH1	5072023	**50,50**
F1352HUN-1.83		1	●	RH1	5072024	**50,50**
F1352HUN-1.84		1	●	RH1	5072025	**50,50**
F1352HUN-1.85		1	●	RH1	5072026	**50,50**
F1352HUN-1.86		1	●	RH1	5072027	**50,50**
F1352HUN-1.87		1	●	RH1	5072028	**50,50**
F1352HUN-1.88		1	●	RH1	5072029	**50,50**
F1352HUN-1.89		1	●	RH1	5072030	**50,50**
F1352HUN-1.9		1	●	RH1	5072031	**50,50**
F1352HUN-1.91		1	●	RH1	5072032	**50,50**
F1352HUN-1.92		1	●	RH1	5072033	**50,50**
F1352HUN-1.93		1	●	RH1	5072034	**50,50**
F1352HUN-1.94		1	○	RH1	5072035	**50,50**
F1352HUN-1.95		1	●	RH1	5072036	**50,50**
F1352HUN-1.96		1	●	RH1	5072037	**50,50**
F1352HUN-1.97		1	●	RH1	5072038	**50,50**
F1352HUN-1.98		1	●	RH1	5072039	**50,50**
F1352HUN-1.99		1	●	RH1	5072040	**50,50**
F1352HUN-2		1	●	RH1	5072242	**46,20**

Bezeichnung / Designation	Sorte / Grade	VE / US		Disc. Gr.	Article No.	EURO Stück / piece
F1352HUN-2.01		1	●	RH1	5072243	**46,20**
F1352HUN-2.02		1	●	RH1	5072244	**46,20**
F1352HUN-2.03		1	●	RH1	5072245	**46,20**
F1352HUN-2.04		1	●	RH1	5072246	**46,20**
F1352HUN-2.05		1	●	RH1	5072247	**46,20**
F1352HUN-2.06		1	●	RH1	5072248	**46,20**
F1352HUN-2.07		1	●	RH1	5072249	**46,20**
F1352HUN-2.08		1	●	RH1	5072250	**46,20**
F1352HUN-2.09		1	●	RH1	5072251	**46,20**
F1352HUN-2.1		1	●	RH1	5072252	**54,20**
F1352HUN-2.11		1	●	RH1	5072253	**54,20**
F1352HUN-2.12		1	●	RH1	5072254	**54,20**
F1352HUN-2.13		1	●	RH1	5072255	**54,20**
F1352HUN-2.14		1	○	RH1	5072256	**54,20**
F1352HUN-2.15		1	●	RH1	5072257	**54,20**
F1352HUN-2.16		1	○	RH1	5072258	**54,20**
F1352HUN-2.17		1	○	RH1	5072259	**54,20**
F1352HUN-2.18		1	●	RH1	5072260	**54,20**
F1352HUN-2.19		1	●	RH1	5072261	**54,20**
F1352HUN-2.2		1	●	RH1	5072262	**54,20**
F1352HUN-2.21		1	●	RH1	5072263	**54,20**
F1352HUN-2.22		1	●	RH1	5072264	**54,20**
F1352HUN-2.23		1	○	RH1	5072265*	**54,20**
F1352HUN-2.24		1	○	RH1	5072266	**54,20**
F1352HUN-2.25		1	●	RH1	5072267	**54,20**
F1352HUN-2.26		1	●	RH1	5072268	**54,20**
F1352HUN-2.27		1	○	RH1	5072269	**54,20**
F1352HUN-2.28		1	●	RH1	5072270	**54,20**
F1352HUN-2.29		1	○	RH1	5072271	**54,20**
F1352HUN-2.3		1	●	RH1	5072272	**54,20**
F1352HUN-2.31		1	●	RH1	5072273	**54,20**
F1352HUN-2.32		1	●	RH1	5072274	**54,20**
F1352HUN-2.33		1	●	RH1	5072275	**54,20**
F1352HUN-2.34		1	●	RH1	5072276	**54,20**
F1352HUN-2.35		1	●	RH1	5072277	**54,20**
F1352HUN-2.36		1	○	RH1	5072278	**54,20**
F1352HUN-2.37		1	●	RH1	5072279	**54,20**
F1352HUN-2.38		1	●	RH1	5072280	**54,20**
F1352HUN-2.39		1	●	RH1	5072281	**54,20**
F1352HUN-2.4		1	●	RH1	5072282	**54,20**
F1352HUN-2.41		1	●	RH1	5072283	**54,20**
F1352HUN-2.42		1	●	RH1	5072284	**54,20**
F1352HUN-2.43		1	●	RH1	5072285	**54,20**
F1352HUN-2.44		1	●	RH1	5072286	**54,20**
F1352HUN-2.45		1	●	RH1	5072287	**54,20**
F1352HUN-2.46		1	●	RH1	5072288	**54,20**
F1352HUN-2.47		1	●	RH1	5072289	**54,20**
F1352HUN-2.48		1	●	RH1	5072290	**54,20**
F1352HUN-2.49		1	●	RH1	5072291	**54,20**
F1352HUN-2.5		1	●	RH1	5072292	**45,50**
F1352HUN-2.51		1	●	RH1	5072293	**45,50**
F1352HUN-2.52		1	●	RH1	5072294	**45,50**
F1352HUN-2.53		1	●	RH1	5072295	**45,50**
F1352HUN-2.54		1	●	RH1	5072296	**45,50**
F1352HUN-2.55		1	●	RH1	5072297	**45,50**
F1352HUN-2.56		1	●	RH1	5072298	**45,50**
F1352HUN-2.57		1	●	RH1	5072299	**45,50**
F1352HUN-2.58		1	●	RH1	5072300	**45,50**
F1352HUN-2.59		1	○	RH1	5072301	**45,50**
F1352HUN-2.6		1	●	RH1	5072302	**56,10**
F1352HUN-2.61		1	●	RH1	5072303	**56,10**
F1352HUN-2.62		1	●	RH1	5072304	**56,10**
F1352HUN-2.63		1	○	RH1	5072305	**56,10**
F1352HUN-2.64		1	○	RH1	5072306	**56,10**
F1352HUN-2.65		1	●	RH1	5072307	**56,10**
F1352HUN-2.66		1	○	RH1	5072308	**56,10**
F1352HUN-2.67		1	●	RH1	5072309	**56,10**
F1352HUN-2.68		1	○	RH1	5072310	**56,10**
F1352HUN-2.69		1	○	RH1	5072311	**56,10**
F1352HUN-2.7		1	●	RH1	5072312	**56,10**

Bezeichnung / Designation	Sorte / Grade	VE / US		Disc. Gr.	Article No.	EURO Stück / piece
F1352HUN-2.71		1	●	RH1	5072313	**56,10**
F1352HUN-2.72		1	●	RH1	5072314	**56,10**
F1352HUN-2.73		1	●	RH1	5072315	**56,10**
F1352HUN-2.74		1	○	RH1	5072316	**56,10**
F1352HUN-2.75		1	●	RH1	5072317	**56,10**
F1352HUN-2.76		1	●	RH1	5072318	**56,10**
F1352HUN-2.77		1	●	RH1	5072319	**56,10**
F1352HUN-2.78		1	●	RH1	5072320	**56,10**
F1352HUN-2.79		1	○	RH1	5072321	**56,10**
F1352HUN-2.8		1	●	RH1	5072322	**56,10**
F1352HUN-2.81		1	○	RH1	5072323	**56,10**
F1352HUN-2.82		1	●	RH1	5072324	**56,10**
F1352HUN-2.83		1	○	RH1	5072325	**56,10**
F1352HUN-2.84		1	●	RH1	5072326	**56,10**
F1352HUN-2.85		1	●	RH1	5072327	**56,10**
F1352HUN-2.86		1	●	RH1	5072328	**56,10**
F1352HUN-2.87		1	○	RH1	5072329	**56,10**
F1352HUN-2.88		1	○	RH1	5072330	**56,10**
F1352HUN-2.89		1	○	RH1	5072331	**56,10**
F1352HUN-2.9		1	●	RH1	5072332	**56,10**
F1352HUN-2.91		1	○	RH1	5072333	**56,10**
F1352HUN-2.92		1	●	RH1	5072334	**56,10**
F1352HUN-2.93		1	●	RH1	5072335	**56,10**
F1352HUN-2.94		1	●	RH1	5072336	**56,10**
F1352HUN-2.95		1	●	RH1	5072337	**56,10**
F1352HUN-2.96		1	●	RH1	5072338	**56,10**
F1352HUN-2.97		1	●	RH1	5072339	**56,10**
F1352HUN-2.98		1	●	RH1	5072340	**56,10**
F1352HUN-2.99		1	●	RH1	5072341	**56,10**
F1352HUN-3		1	●	RH1	5072342	**41,00**
F1352HUN-3.01		1	●	RH1	5072343	**41,00**
F1352HUN-3.02		1	●	RH1	5072344	**41,00**
F1352HUN-3.03		1	●	RH1	5072345	**41,00**
F1352HUN-3.04		1	●	RH1	5072346	**41,00**
F1352HUN-3.05		1	●	RH1	5072347	**41,00**
F1352HUN-3.06		1	●	RH1	5072348	**41,00**
F1352HUN-3.07		1	●	RH1	5072349	**41,00**
F1352HUN-3.08		1	●	RH1	5072350	**41,00**
F1352HUN-3.09		1	●	RH1	5072351	**41,00**
F1352HUN-3.1		1	●	RH1	5072352	**53,50**
F1352HUN-3.11		1	●	RH1	5072353	**53,50**
F1352HUN-3.12		1	●	RH1	5072354	**53,50**
F1352HUN-3.13		1	●	RH1	5072355	**53,50**
F1352HUN-3.14		1	●	RH1	5072356	**53,50**
F1352HUN-3.15		1	●	RH1	5072357	**53,50**
F1352HUN-3.16		1	●	RH1	5072358	**53,50**
F1352HUN-3.17		1	●	RH1	5072359	**53,50**
F1352HUN-3.18		1	●	RH1	5072360	**53,50**
F1352HUN-3.19		1	●	RH1	5072361	**53,50**
F1352HUN-3.2		1	●	RH1	5072362	**53,50**
F1352HUN-3.21		1	●	RH1	5072363	**53,50**
F1352HUN-3.22		1	●	RH1	5072364	**53,50**
F1352HUN-3.23		1	●	RH1	5072365	**53,50**
F1352HUN-3.24		1	●	RH1	5072366	**53,50**
F1352HUN-3.25		1	●	RH1	5072367	**53,50**
F1352HUN-3.26		1	○	RH1	5072368	**53,50**
F1352HUN-3.27		1	●	RH1	5072369	**53,50**
F1352HUN-3.28		1	○	RH1	5072370	**53,50**
F1352HUN-3.29		1	○	RH1	5072371*	**53,50**
F1352HUN-3.3		1	●	RH1	5072372	**53,50**
F1352HUN-3.31		1	●	RH1	5072373	**53,50**
F1352HUN-3.32		1	●	RH1	5072374	**53,50**
F1352HUN-3.33		1	○	RH1	5072375	**53,50**
F1352HUN-3.34		1	○	RH1	5072376	**53,50**
F1352HUN-3.35		1	●	RH1	5072377	**53,50**
F1352HUN-3.36		1	○	RH1	5072378	**53,50**
F1352HUN-3.37		1	○	RH1	5072379	**53,50**
F1352HUN-3.38		1	○	RH1	5072380	**53,50**
F1352HUN-3.39		1	○	RH1	5072381	**53,50**
F1352HUN-3.4		1	●	RH1	5072382	**53,50**

Bezeichnung / Designation	Sorte / Grade	VE / US		Disc. Gr.	Article No.	EURO Stück / piece
F1352HUN-3.41		1	○	RH1	5072383	**53,50**
F1352HUN-3.42		1	●	RH1	5072384	**53,50**
F1352HUN-3.43		1	○	RH1	5072385	**53,50**
F1352HUN-3.44		1	●	RH1	5072386	**53,50**
F1352HUN-3.45		1	●	RH1	5072387	**53,50**
F1352HUN-3.46		1	●	RH1	5072388	**53,50**
F1352HUN-3.47		1	●	RH1	5072389	**53,50**
F1352HUN-3.48		1	●	RH1	5072390	**53,50**
F1352HUN-3.49		1	●	RH1	5072391	**53,50**
F1352HUN-3.5		1	●	RH1	5072392	**45,50**
F1352HUN-3.51		1	●	RH1	5072393	**45,50**
F1352HUN-3.52		1	●	RH1	5072394	**45,50**
F1352HUN-3.53		1	●	RH1	5072395	**45,50**
F1352HUN-3.54		1	●	RH1	5072396	**45,50**
F1352HUN-3.55		1	●	RH1	5072397	**45,50**
F1352HUN-3.56		1	●	RH1	5072398	**45,50**
F1352HUN-3.57		1	●	RH1	5072399	**45,50**
F1352HUN-3.58		1	●	RH1	5072400	**45,50**
F1352HUN-3.59		1	○	RH1	5072401	**45,50**
F1352HUN-3.61		1	●	RH1	5072403	**58,80**
F1352HUN-3.62		1	●	RH1	5072404	**58,80**
F1352HUN-3.63		1	●	RH1	5072405	**58,80**
F1352HUN-3.64		1	○	RH1	5072406	**58,80**
F1352HUN-3.65		1	●	RH1	5072407	**58,80**
F1352HUN-3.66		1	○	RH1	5072408	**58,80**
F1352HUN-3.67		1	●	RH1	5072409	**58,80**
F1352HUN-3.68		1	●	RH1	5072410	**58,80**
F1352HUN-3.69		1	○	RH1	5072411	**58,80**
F1352HUN-3.71		1	○	RH1	5072413	**58,80**
F1352HUN-3.72		1	○	RH1	5072414	**58,80**
F1352HUN-3.73		1	○	RH1	5072415	**58,80**
F1352HUN-3.74		1	○	RH1	5072416*	**58,80**
F1352HUN-3.75		1	●	RH1	5072417	**58,80**
F1352HUN-3.76		1	○	RH1	5072418	**58,80**
F1352HUN-3.77		1	○	RH1	5072419	**58,80**
F1352HUN-3.78		1	○	RH1	5072420	**58,80**
F1352HUN-3.79		1	○	RH1	5072421	**58,80**
F1352HUN-3.81		1	○	RH1	5072423	**58,80**
F1352HUN-3.82		1	●	RH1	5072424	**44,90**
F1352HUN-3.83		1	○	RH1	5072425	**44,90**
F1352HUN-3.84		1	○	RH1	5072426	**44,90**
F1352HUN-3.85		1	●	RH1	5072427	**44,90**
F1352HUN-3.86		1	○	RH1	5072428	**44,90**
F1352HUN-3.87		1	○	RH1	5072429	**44,90**
F1352HUN-3.88		1	●	RH1	5072430	**44,90**
F1352HUN-3.89		1	○	RH1	5072431	**44,90**
F1352HUN-3.9		1	○	RH1	5072432	**44,90**
F1352HUN-3.91		1	●	RH1	5072433	**44,90**
F1352HUN-3.92		1	●	RH1	5072434	**44,90**
F1352HUN-3.93		1	○	RH1	5072435	**44,90**
F1352HUN-3.94		1	○	RH1	5072436	**44,90**
F1352HUN-3.95		1	●	RH1	5072437	**44,90**
F1352HUN-3.96		1	●	RH1	5072438	**44,90**
F1352HUN-3.97		1	●	RH1	5072439	**44,90**
F1352HUN-3.98		1	●	RH1	5072440	**44,90**
F1352HUN-3.99		1	●	RH1	5072441	**44,90**
F1352HUN-4		1	●	RH1	5072442	**44,90**
F1352HUN-4.01		1	●	RH1	5072443	**44,90**
F1352HUN-4.02		1	●	RH1	5072444	**44,90**
F1352HUN-4.03		1	●	RH1	5072445	**44,90**
F1352HUN-4.04		1	●	RH1	5072446	**44,90**
F1352HUN-4.05		1	●	RH1	5072447	**44,90**
F1352HUN-4.06		1	●	RH1	5072448	**44,90**
F1352HUN-4.07		1	●	RH1	5072449	**44,90**
F1352HUN-4.08		1	●	RH1	5072450	**44,90**
F1352HUN-4.09		1	●	RH1	5072451	**44,90**
F1352HUN-4.1		1	●	RH1	5072452	**44,90**
F1352HUN-4.11		1	●	RH1	5072453	**44,90**
F1352HUN-4.12		1	●	RH1	5072454	**44,90**
F1352HUN-4.13		1	●	RH1	5072455	**44,90**

Bezeichnung / Designation	Sorte / Grade	VE / US		Disc. Gr.	Article No.	EURO Stück / piece
F1352HUN-4.14		1	●	RH1	5072456	44,90
F1352HUN-4.15		1	●	RH1	5072457	44,90
F1352HUN-4.16		1	●	RH1	5072458	44,90
F1352HUN-4.17		1	○	RH1	5072459	44,90
F1352HUN-4.18		1	○	RH1	5072460	44,90
F1352HUN-4.19		1	○	RH1	5072461	44,90
F1352HUN-4.2		1	●	RH1	5072462	44,90
F1352HUN-4.21		1	●	RH1	5072463	55,10
F1352HUN-4.22		1	●	RH1	5072464	55,10
F1352HUN-4.23		1	●	RH1	5072465	55,10
F1352HUN-4.24		1	●	RH1	5072466	55,10
F1352HUN-4.25		1	●	RH1	5072467	55,10
F1352HUN-4.26		1	○	RH1	5072468	55,10
F1352HUN-4.27		1	○	RH1	5072469	55,10
F1352HUN-4.28		1	○	RH1	5072470	55,10
F1352HUN-4.29		1	○	RH1	5072471	55,10
F1352HUN-4.3		1	●	RH1	5072472	55,10
F1352HUN-4.31		1	○	RH1	5072473	55,10
F1352HUN-4.32		1	○	RH1	5072474	55,10
F1352HUN-4.33		1	○	RH1	5072475	55,10
F1352HUN-4.34		1	●	RH1	5072476	55,10
F1352HUN-4.35		1	●	RH1	5072477	55,10
F1352HUN-4.36		1	●	RH1	5072478	55,10
F1352HUN-4.37		1	○	RH1	5072479	55,10
F1352HUN-4.38		1	●	RH1	5072480	55,10
F1352HUN-4.39		1	○	RH1	5072481	55,10
F1352HUN-4.41		1	○	RH1	5072483	55,10
F1352HUN-4.42		1	○	RH1	5072484	55,10
F1352HUN-4.43		1	●	RH1	5072485	55,10
F1352HUN-4.44		1	○	RH1	5072486	55,10
F1352HUN-4.45		1	●	RH1	5072487	55,10
F1352HUN-4.46		1	○	RH1	5072488	55,10
F1352HUN-4.47		1	○	RH1	5072489	55,10
F1352HUN-4.48		1	●	RH1	5072490	55,10
F1352HUN-4.49		1	●	RH1	5072491	55,10
F1352HUN-4.5		1	●	RH1	5072492	55,10
F1352HUN-4.51		1	○	RH1	5072493	55,10
F1352HUN-4.52		1	●	RH1	5072494	55,10
F1352HUN-4.53		1	●	RH1	5072495	55,10
F1352HUN-4.54		1	●	RH1	5072496	55,10
F1352HUN-4.55		1	●	RH1	5072497	55,10
F1352HUN-4.56		1	○	RH1	5072498	55,10
F1352HUN-4.57		1	○	RH1	5072499	55,10
F1352HUN-4.58		1	○	RH1	5072500	55,10
F1352HUN-4.59		1	○	RH1	5072501	55,10
F1352HUN-4.61		1	○	RH1	5072503	55,10
F1352HUN-4.62		1	○	RH1	5072504	55,10
F1352HUN-4.63		1	○	RH1	5072505	55,10
F1352HUN-4.64		1	○	RH1	5072506	55,10
F1352HUN-4.65		1	●	RH1	5072507	55,10
F1352HUN-4.66		1	○	RH1	5072508	55,10
F1352HUN-4.67		1	○	RH1	5072509	55,10
F1352HUN-4.68		1	○	RH1	5072510	55,10
F1352HUN-4.69		1	●	RH1	5072511	55,10
F1352HUN-4.71		1	○	RH1	5072513	55,10
F1352HUN-4.72		1	○	RH1	5072514	55,10
F1352HUN-4.73		1	○	RH1	5072515	55,10
F1352HUN-4.74		1	○	RH1	5072516	55,10
F1352HUN-4.75		1	●	RH1	5072517	55,10
F1352HUN-4.76		1	●	RH1	5072518	48,20
F1352HUN-4.77		1	●	RH1	5072519	48,20
F1352HUN-4.78		1	●	RH1	5072520	48,20
F1352HUN-4.79		1	●	RH1	5072521	48,20
F1352HUN-4.8		1	●	RH1	5072522	48,20
F1352HUN-4.81		1	●	RH1	5072523	48,20
F1352HUN-4.82		1	●	RH1	5072524	48,20
F1352HUN-4.83		1	●	RH1	5072525	48,20
F1352HUN-4.84		1	●	RH1	5072526	48,20
F1352HUN-4.85		1	●	RH1	5072527	48,20
F1352HUN-4.86		1	○	RH1	5072528	48,20

Bezeichnung / Designation	Sorte / Grade	VE / US		Disc. Gr.	Article No.	EURO Stück / piece
F1352HUN-4.87		1	●	RH1	5072529	48,20
F1352HUN-4.88		1	●	RH1	5072530	48,20
F1352HUN-4.89		1	○	RH1	5072531	48,20
F1352HUN-4.9		1	●	RH1	5072532	48,20
F1352HUN-4.91		1	○	RH1	5072533	48,20
F1352HUN-4.92		1	●	RH1	5072534	48,20
F1352HUN-4.93		1	●	RH1	5072535	48,20
F1352HUN-4.94		1	●	RH1	5072536	48,20
F1352HUN-4.95		1	●	RH1	5072537	48,20
F1352HUN-4.96		1	●	RH1	5072538	48,20
F1352HUN-4.97		1	●	RH1	5072539	48,20
F1352HUN-4.98		1	●	RH1	5072540	48,20
F1352HUN-4.99		1	●	RH1	5072541	48,20
F1352HUN-5		1	●	RH1	5072542	48,20
F1352HUN-5.01		1	●	RH1	5072543	48,20
F1352HUN-5.02		1	●	RH1	5072544	48,20
F1352HUN-5.03		1	●	RH1	5072545	48,20
F1352HUN-5.04		1	●	RH1	5072546	48,20
F1352HUN-5.05		1	●	RH1	5072547	48,20
F1352HUN-5.06		1	●	RH1	5072548	48,20
F1352HUN-5.07		1	●	RH1	5072549	48,20
F1352HUN-5.08		1	●	RH1	5072550	48,20
F1352HUN-5.09		1	●	RH1	5072551	48,20
F1352HUN-5.1		1	●	RH1	5072552	48,20
F1352HUN-5.11		1	●	RH1	5072553	48,20
F1352HUN-5.12		1	●	RH1	5072554	48,20
F1352HUN-5.13		1	●	RH1	5072555	48,20
F1352HUN-5.14		1	○	RH1	5072556	48,20
F1352HUN-5.15		1	●	RH1	5072557	48,20
F1352HUN-5.16		1	○	RH1	5072558	48,20
F1352HUN-5.17		1	○	RH1	5072559	48,20
F1352HUN-5.18		1	○	RH1	5072560	48,20
F1352HUN-5.19		1	○	RH1	5072561	48,20
F1352HUN-5.2		1	○	RH1	5072562	48,20
F1352HUN-5.21		1	○	RH1	5072563	54,20
F1352HUN-5.22		1	○	RH1	5072564	54,20
F1352HUN-5.23		1	○	RH1	5072565	54,20
F1352HUN-5.24		1	●	RH1	5072566	54,20
F1352HUN-5.25		1	●	RH1	5072567	54,20
F1352HUN-5.26		1	○	RH1	5072568	54,20
F1352HUN-5.27		1	○	RH1	5072569	54,20
F1352HUN-5.28		1	○	RH1	5072570	54,20
F1352HUN-5.29		1	○	RH1	5072571	54,20
F1352HUN-5.31		1	○	RH1	5072573	54,20
F1352HUN-5.32		1	○	RH1	5072574	54,20
F1352HUN-5.33		1	○	RH1	5072575	54,20
F1352HUN-5.34		1	○	RH1	5072576	54,20
F1352HUN-5.35		1	○	RH1	5072577	54,20
F1352HUN-5.36		1	○	RH1	5072578	54,20
F1352HUN-5.37		1	○	RH1	5072579	54,20
F1352HUN-5.38		1	○	RH1	5072580	54,20
F1352HUN-5.39		1	○	RH1	5072581	54,20
F1352HUN-5.41		1	●	RH1	5072583	54,20
F1352HUN-5.42		1	○	RH1	5072584	54,20
F1352HUN-5.43		1	○	RH1	5072585	54,20
F1352HUN-5.44		1	○	RH1	5072586	54,20
F1352HUN-5.45		1	●	RH1	5072587	54,20
F1352HUN-5.46		1	○	RH1	5072588	54,20
F1352HUN-5.47		1	○	RH1	5072589	54,20
F1352HUN-5.48		1	○	RH1	5072590	54,20
F1352HUN-5.49		1	○	RH1	5072591	54,20
F1352HUN-5.5		1	●	RH1	5072592	54,20
F1352HUN-5.51		1	●	RH1	5072593	54,20
F1352HUN-5.52		1	●	RH1	5072594	54,20
F1352HUN-5.53		1	●	RH1	5072633	54,20
F1352HUN-5.54		1	●	RH1	5072634	54,20
F1352HUN-5.55		1	●	RH1	5072635	54,20
F1352HUN-5.56		1	○	RH1	5072636	54,20
F1352HUN-5.57		1	●	RH1	5072637	54,20
F1352HUN-5.58		1	●	RH1	5072638	54,20

Bezeichnung / Designation	Sorte / Grade	VE / US		Disc. Gr.	Article No.	EURO Stück / piece
F1352HUN-5.59		1	○	RH1	5072639	54,20
F1352HUN-5.6		1	●	RH1	5072640	54,20
F1352HUN-5.61		1	○	RH1	5072641	54,20
F1352HUN-5.62		1	○	RH1	5072642	54,20
F1352HUN-5.63		1	○	RH1	5072643	54,20
F1352HUN-5.64		1	●	RH1	5072644	54,20
F1352HUN-5.65		1	●	RH1	5072645	54,20
F1352HUN-5.66		1	○	RH1	5072646	54,20
F1352HUN-5.67		1	●	RH1	5072647	54,20
F1352HUN-5.68		1	○	RH1	5072648	54,20
F1352HUN-5.69		1	●	RH1	5072649	54,20
F1352HUN-5.71		1	○	RH1	5072651	54,20
F1352HUN-5.72		1	○	RH1	5072652	54,20
F1352HUN-5.73		1	○	RH1	5072653	54,20
F1352HUN-5.74		1	○	RH1	5072654	54,20
F1352HUN-5.75		1	○	RH1	5072655	54,20
F1352HUN-5.76		1	○	RH1	5072656	54,20
F1352HUN-5.77		1	○	RH1	5072657	54,20
F1352HUN-5.78		1	○	RH1	5072658	54,20
F1352HUN-5.79		1	○	RH1	5072659	54,20
F1352HUN-5.81		1	●	RH1	5072661	54,20
F1352HUN-5.82		1	○	RH1	5072662*	54,20
F1352HUN-5.83		1	○	RH1	5072663	54,20
F1352HUN-5.84		1	○	RH1	5072664	54,20
F1352HUN-5.85		1	●	RH1	5072665	54,20
F1352HUN-5.86		1	○	RH1	5072666	54,20
F1352HUN-5.87		1	○	RH1	5072667	54,20
F1352HUN-5.88		1	○	RH1	5072668	54,20
F1352HUN-5.89		1	○	RH1	5072669	54,20
F1352HUN-5.91		1	●	RH1	5072671	54,20
F1352HUN-5.92		1	●	RH1	5072672	54,20
F1352HUN-5.93		1	○	RH1	5072673	54,20
F1352HUN-5.94		1	●	RH1	5072674	54,20
F1352HUN-5.95		1	●	RH1	5072675	54,20
F1352HUN-5.96		1	●	RH1	5072676	54,20
F1352HUN-5.97		1	●	RH1	5072677	54,20
F1352HUN-5.98		1	●	RH1	5072678	54,20
F1352HUN-5.99		1	●	RH1	5072679	54,20
F1352HUN-6		1	●	RH1	5072680	54,20
F1352HUN-6.01		1	●	RH1	5072681	54,20
F1352HUN-6.02		1	●	RH1	5072682	54,20
F1352HUN-6.03		1	●	RH1	5072683	54,20
F1352HUN-6.04		1	●	RH1	5072684	54,20
F1352HUN-6.05		1	●	RH1	5072685	54,20
F1352HUN-6.06		1	●	RH1	5072686	54,20
F1352HUN-6.07		1	●	RH1	5072687	54,20
F1352HUN-6.08		1	●	RH1	5072688	54,20
F1352HUN-6.09		1	○	RH1	5072689	54,20
F1352HUN-6.1		1	●	RH1	5072690	54,20
F1352HUN-6.11		1	●	RH1	5072691	54,20
F1352HUN-6.12		1	●	RH1	5072692	58,80
F1352HUN-6.13		1	○	RH1	5072693	58,80
F1352HUN-6.14		1	○	RH1	5072694	58,80
F1352HUN-6.15		1	●	RH1	5072695	58,80
F1352HUN-6.16		1	●	RH1	5072696	58,80
F1352HUN-6.17		1	○	RH1	5072697	58,80
F1352HUN-6.18		1	○	RH1	5072698	58,80
F1352HUN-6.19		1	○	RH1	5072699	58,80
F1352HUN-6.2		1	●	RH1	5072700	58,80
F1352HUN-6.21		1	○	RH1	5072701	58,80
F1352HUN-6.22		1	○	RH1	5072702	58,80
F1352HUN-6.23		1	○	RH1	5072703	58,80
F1352HUN-6.24		1	○	RH1	5072704	58,80
F1352HUN-6.25		1	●	RH1	5072705	58,80
F1352HUN-6.26		1	○	RH1	5072706	58,80
F1352HUN-6.27		1	○	RH1	5072707	58,80
F1352HUN-6.28		1	○	RH1	5072708	58,80
F1352HUN-6.29		1	○	RH1	5072709	58,80
F1352HUN-6.31		1	○	RH1	5072711	58,80
F1352HUN-6.32		1	●	RH1	5072712	58,80

Bezeichnung / Designation	Sorte / Grade	VE / US		Disc. Gr.	Article No.	EURO Stück / piece
F1352HUN-6.33		1	●	RH1	5072713	58,80
F1352HUN-6.34		1	●	RH1	5072714	58,80
F1352HUN-6.35		1	●	RH1	5072715	58,80
F1352HUN-6.36		1	●	RH1	5072716	58,80
F1352HUN-6.37		1	●	RH1	5072717	58,80
F1352HUN-6.38		1	●	RH1	5072718	58,80
F1352HUN-6.39		1	○	RH1	5072719	58,80
F1352HUN-6.4		1	●	RH1	5072720	58,80
F1352HUN-6.41		1	○	RH1	5072721	58,80
F1352HUN-6.42		1	●	RH1	5072722	58,80
F1352HUN-6.43		1	●	RH1	5072723	58,80
F1352HUN-6.44		1	○	RH1	5072724	58,80
F1352HUN-6.45		1	●	RH1	5072725	58,80
F1352HUN-6.46		1	○	RH1	5072726	58,80
F1352HUN-6.47		1	○	RH1	5072727	58,80
F1352HUN-6.48		1	○	RH1	5072728	58,80
F1352HUN-6.49		1	●	RH1	5072729	58,80
F1352HUN-6.51		1	●	RH1	5072731	58,80
F1352HUN-6.52		1	●	RH1	5072732	58,80
F1352HUN-6.53		1	○	RH1	5072733	58,80
F1352HUN-6.54		1	○	RH1	5072734	58,80
F1352HUN-6.55		1	●	RH1	5072735	58,80
F1352HUN-6.56		1	○	RH1	5072736	58,80
F1352HUN-6.57		1	○	RH1	5072737	58,80
F1352HUN-6.58		1	○	RH1	5072738	58,80
F1352HUN-6.59		1	○	RH1	5072739	58,80
F1352HUN-6.61		1	○	RH1	5072741	58,80
F1352HUN-6.62		1	○	RH1	5072742	58,80
F1352HUN-6.63		1	○	RH1	5072743	58,80
F1352HUN-6.64		1	●	RH1	5072744	58,80
F1352HUN-6.65		1	○	RH1	5072745	58,80
F1352HUN-6.66		1	○	RH1	5072746	58,80
F1352HUN-6.67		1	○	RH1	5072747	58,80
F1352HUN-6.68		1	○	RH1	5072748	58,80
F1352HUN-6.69		1	○	RH1	5072749	58,80
F1352HUN-6.71		1	○	RH1	5072751	58,80
F1352HUN-6.72		1	●	RH1	5072752	58,80
F1352HUN-6.73		1	○	RH1	5072753	58,80
F1352HUN-6.74		1	○	RH1	5072754	58,80
F1352HUN-6.75		1	○	RH1	5072755	58,80
F1352HUN-6.76		1	○	RH1	5072756	58,80
F1352HUN-6.77		1	○	RH1	5072757	58,80
F1352HUN-6.78		1	○	RH1	5072758	58,80
F1352HUN-6.79		1	○	RH1	5072759	58,80
F1352HUN-6.81		1	○	RH1	5072761	58,80
F1352HUN-6.82		1	○	RH1	5072762	58,80
F1352HUN-6.83		1	●	RH1	5072763	58,80
F1352HUN-6.84		1	○	RH1	5072764	58,80
F1352HUN-6.85		1	○	RH1	5072765	58,80
F1352HUN-6.86		1	○	RH1	5072766	58,80
F1352HUN-6.87		1	○	RH1	5072767	58,80
F1352HUN-6.88		1	○	RH1	5072768	58,80
F1352HUN-6.89		1	○	RH1	5072769	58,80
F1352HUN-6.91		1	○	RH1	5072771*	58,80
F1352HUN-6.92		1	○	RH1	5072772	58,80
F1352HUN-6.93		1	○	RH1	5072773	58,80
F1352HUN-6.94		1	○	RH1	5072774	58,80
F1352HUN-6.95		1	●	RH1	5072775	58,80
F1352HUN-6.96		1	●	RH1	5072776	58,80
F1352HUN-6.97		1	○	RH1	5072777	58,80
F1352HUN-6.98		1	●	RH1	5072778	58,80
F1352HUN-6.99		1	●	RH1	5072779	58,80
F1352HUN-7		1	●	RH1	5072780	58,80
F1352HUN-7.01		1	●	RH1	5072781	58,80
F1352HUN-7.02		1	●	RH1	5072782	58,80
F1352HUN-7.03		1	●	RH1	5072783	58,80
F1352HUN-7.04		1	●	RH1	5072784	58,80
F1352HUN-7.05		1	●	RH1	5072785	58,80
F1352HUN-7.06		1	○	RH1	5072786	58,80
F1352HUN-7.07		1	●	RH1	5072787	58,80

Bezeichnung / Designation	Sorte / Grade	VE / US		Disc. Gr.	Article No.	EURO Stück / piece
F1352HUN-7.08		1	●	RH1	5072788	58,80
F1352HUN-7.09		1	○	RH1	5072789	58,80
F1352HUN-7.11		1	○	RH1	5072791	58,80
F1352HUN-7.12		1	○	RH1	5072792	58,80
F1352HUN-7.13		1	●	RH1	5072793	58,80
F1352HUN-7.14		1	●	RH1	5072794	58,80
F1352HUN-7.15		1	○	RH1	5072795	58,80
F1352HUN-7.16		1	○	RH1	5072796	58,80
F1352HUN-7.17		1	○	RH1	5072797	58,80
F1352HUN-7.18		1	○	RH1	5072798	58,80
F1352HUN-7.19		1	○	RH1	5072799	58,80
F1352HUN-7.21		1	○	RH1	5072801	58,80
F1352HUN-7.22		1	●	RH1	5072802	58,80
F1352HUN-7.23		1	○	RH1	5072803	58,80
F1352HUN-7.24		1	●	RH1	5072804	58,80
F1352HUN-7.25		1	●	RH1	5072805	58,80
F1352HUN-7.26		1	●	RH1	5072806	58,80
F1352HUN-7.27		1	○	RH1	5072807	58,80
F1352HUN-7.28		1	○	RH1	5072808*	58,80
F1352HUN-7.29		1	○	RH1	5072809	58,80
F1352HUN-7.31		1	○	RH1	5072811	58,80
F1352HUN-7.32		1	○	RH1	5072812	58,80
F1352HUN-7.33		1	○	RH1	5072813	58,80
F1352HUN-7.34		1	○	RH1	5072814	58,80
F1352HUN-7.35		1	●	RH1	5072815	58,80
F1352HUN-7.36		1	○	RH1	5072816	58,80
F1352HUN-7.37		1	○	RH1	5072817	58,80
F1352HUN-7.38		1	○	RH1	5072818	58,80
F1352HUN-7.39		1	○	RH1	5072819	58,80
F1352HUN-7.41		1	○	RH1	5072821	58,80
F1352HUN-7.42		1	○	RH1	5072822	58,80
F1352HUN-7.43		1	○	RH1	5072823	58,80
F1352HUN-7.44		1	○	RH1	5072824	58,80
F1352HUN-7.45		1	○	RH1	5072825	58,80
F1352HUN-7.46		1	○	RH1	5072826	58,80
F1352HUN-7.47		1	○	RH1	5072827	58,80
F1352HUN-7.48		1	○	RH1	5072828	58,80
F1352HUN-7.49		1	○	RH1	5072829	58,80
F1352HUN-7.5		1	●	RH1	5072830	58,80
F1352HUN-7.51		1	○	RH1	5072831	58,80
F1352HUN-7.52		1	●	RH1	5072832	58,80
F1352HUN-7.53		1	○	RH1	5072833	58,80
F1352HUN-7.54		1	●	RH1	5072834	58,80
F1352HUN-7.55		1	●	RH1	5072835	58,80
F1352HUN-7.56		1	○	RH1	5072836	58,80
F1352HUN-7.57		1	○	RH1	5072837	58,80
F1352HUN-7.58		1	●	RH1	5072838	58,80
F1352HUN-7.59		1	●	RH1	5072839	58,80
F1352HUN-7.61		1	○	RH1	5072841	58,80
F1352HUN-7.62		1	○	RH1	5072842	58,80
F1352HUN-7.63		1	○	RH1	5072843	58,80
F1352HUN-7.64		1	○	RH1	5072844	58,80
F1352HUN-7.65		1	●	RH1	5072845	58,80
F1352HUN-7.66		1	○	RH1	5072846	58,80
F1352HUN-7.67		1	○	RH1	5072847	58,80
F1352HUN-7.68		1	○	RH1	5072848	58,80
F1352HUN-7.69		1	○	RH1	5072849	58,80
F1352HUN-7.71		1	○	RH1	5072851	58,80
F1352HUN-7.72		1	○	RH1	5072852	58,80
F1352HUN-7.73		1	○	RH1	5072853	58,80
F1352HUN-7.74		1	○	RH1	5072854	58,80
F1352HUN-7.75		1	○	RH1	5072855	58,80
F1352HUN-7.76		1	○	RH1	5072856	58,80
F1352HUN-7.77		1	○	RH1	5072857	58,80
F1352HUN-7.78		1	○	RH1	5072858	58,80
F1352HUN-7.79		1	○	RH1	5072859	58,80
F1352HUN-7.81		1	○	RH1	5072861	58,80
F1352HUN-7.82		1	○	RH1	5072862	58,80
F1352HUN-7.83		1	○	RH1	5072863	58,80
F1352HUN-7.84		1	○	RH1	5072864	58,80

Bezeichnung / Designation	Sorte / Grade	VE / US		Disc. Gr.	Article No.	EURO Stück / piece
F1352HUN-7.85		1	●	RH1	5072865	58,80
F1352HUN-7.86		1	○	RH1	5072866	58,80
F1352HUN-7.87		1	○	RH1	5072867	58,80
F1352HUN-7.88		1	○	RH1	5072868	58,80
F1352HUN-7.89		1	○	RH1	5072869	58,80
F1352HUN-7.91		1	●	RH1	5072871	58,80
F1352HUN-7.92		1	●	RH1	5072872	58,80
F1352HUN-7.93		1	●	RH1	5072873	58,80
F1352HUN-7.94		1	●	RH1	5072874	58,80
F1352HUN-7.95		1	●	RH1	5072875	58,80
F1352HUN-7.96		1	●	RH1	5072876	58,80
F1352HUN-7.97		1	●	RH1	5072877	58,80
F1352HUN-7.98		1	●	RH1	5072878	58,80
F1352HUN-7.99		1	●	RH1	5072879	58,80
F1352HUN-8		1	●	RH1	5072880	58,80
F1352HUN-8.01		1	●	RH1	5072881	58,80
F1352HUN-8.02		1	●	RH1	5072882	58,80
F1352HUN-8.03		1	●	RH1	5072883	58,80
F1352HUN-8.04		1	●	RH1	5072884	58,80
F1352HUN-8.05		1	●	RH1	5072885	58,80
F1352HUN-8.06		1	●	RH1	5072886	58,80
F1352HUN-8.07		1	●	RH1	5072887	58,80
F1352HUN-8.08		1	●	RH1	5072888	58,80
F1352HUN-8.09		1	○	RH1	5072889	58,80
F1352HUN-8.1		1	●	RH1	5072890	58,80
F1352HUN-8.11		1	●	RH1	5072891	58,80
F1352HUN-8.12		1	●	RH1	5072892	58,80
F1352HUN-8.13		1	○	RH1	5072893	58,80
F1352HUN-8.14		1	●	RH1	5072894	58,80
F1352HUN-8.15		1	●	RH1	5072895	58,80
F1352HUN-8.16		1	○	RH1	5072896	58,80
F1352HUN-8.17		1	●	RH1	5072897	58,80
F1352HUN-8.18		1	○	RH1	5072898	58,80
F1352HUN-8.19		1	○	RH1	5072899	58,80
F1352HUN-8.2		1	●	RH1	5072900	58,80
F1352HUN-8.21		1	○	RH1	5072901	74,00
F1352HUN-8.22		1	○	RH1	5072902	74,00
F1352HUN-8.23		1	○	RH1	5072903	74,00
F1352HUN-8.24		1	○	RH1	5072904	74,00
F1352HUN-8.25		1	●	RH1	5072905	74,00
F1352HUN-8.26		1	○	RH1	5072906	74,00
F1352HUN-8.27		1	○	RH1	5072907	74,00
F1352HUN-8.28		1	○	RH1	5072908	74,00
F1352HUN-8.29		1	○	RH1	5072909	74,00
F1352HUN-8.3		1	○	RH1	5072910	74,00
F1352HUN-8.31		1	○	RH1	5072911	74,00
F1352HUN-8.32		1	○	RH1	5072912	74,00
F1352HUN-8.33		1	○	RH1	5072913	74,00
F1352HUN-8.34		1	○	RH1	5072914	74,00
F1352HUN-8.35		1	○	RH1	5072915	74,00
F1352HUN-8.36		1	○	RH1	5072916	74,00
F1352HUN-8.37		1	○	RH1	5072917	74,00
F1352HUN-8.38		1	○	RH1	5072918	74,00
F1352HUN-8.39		1	○	RH1	5072919	74,00
F1352HUN-8.41		1	○	RH1	5072921	74,00
F1352HUN-8.42		1	○	RH1	5072922	74,00
F1352HUN-8.43		1	○	RH1	5072923	74,00
F1352HUN-8.44		1	○	RH1	5072924	74,00
F1352HUN-8.45		1	○	RH1	5072925	74,00
F1352HUN-8.46		1	○	RH1	5072926	74,00
F1352HUN-8.47		1	○	RH1	5072927	74,00
F1352HUN-8.48		1	○	RH1	5072928	74,00
F1352HUN-8.49		1	○	RH1	5072929	74,00
F1352HUN-8.5		1	○	RH1	5072930	74,00
F1352HUN-8.51		1	●	RH1	5072931	74,00
F1352HUN-8.52		1	●	RH1	5072932	74,00
F1352HUN-8.53		1	○	RH1	5072933	74,00
F1352HUN-8.54		1	○	RH1	5072934	74,00
F1352HUN-8.55		1	●	RH1	5072935	74,00
F1352HUN-8.56		1	○	RH1	5072936	74,00

Bezeichnung / Designation	Sorte / Grade	VE / US		Disc. Gr.	Article No.	EURO Stück / piece
F1352HUN-8.57		1	●	RH1	5072937	74,00
F1352HUN-8.58		1	○	RH1	5072938	74,00
F1352HUN-8.59		1	○	RH1	5072939	74,00
F1352HUN-8.61		1	○	RH1	5072941	74,00
F1352HUN-8.62		1	○	RH1	5072942	74,00
F1352HUN-8.63		1	○	RH1	5072943	74,00
F1352HUN-8.64		1	○	RH1	5072944	74,00
F1352HUN-8.65		1	○	RH1	5072945	74,00
F1352HUN-8.66		1	○	RH1	5072946	74,00
F1352HUN-8.67		1	○	RH1	5072947	74,00
F1352HUN-8.68		1	○	RH1	5072948	74,00
F1352HUN-8.69		1	○	RH1	5072949	74,00
F1352HUN-8.71		1	○	RH1	5072951	74,00
F1352HUN-8.72		1	○	RH1	5072952	74,00
F1352HUN-8.73		1	○	RH1	5072953	74,00
F1352HUN-8.74		1	○	RH1	5072954	74,00
F1352HUN-8.75		1	○	RH1	5072955	74,00
F1352HUN-8.76		1	○	RH1	5072956	74,00
F1352HUN-8.77		1	○	RH1	5072957	74,00
F1352HUN-8.78		1	○	RH1	5072958	74,00
F1352HUN-8.79		1	○	RH1	5072959	74,00
F1352HUN-8.81		1	○	RH1	5072961	74,00
F1352HUN-8.82		1	○	RH1	5072962	74,00
F1352HUN-8.83		1	○	RH1	5072963	74,00
F1352HUN-8.84		1	○	RH1	5072964	74,00
F1352HUN-8.85		1	○	RH1	5072965	74,00
F1352HUN-8.86		1	○	RH1	5072966	74,00
F1352HUN-8.87		1	○	RH1	5072967	74,00
F1352HUN-8.88		1	○	RH1	5072968	74,00
F1352HUN-8.89		1	○	RH1	5072969	74,00
F1352HUN-8.91		1	○	RH1	5072971	74,00
F1352HUN-8.92		1	○	RH1	5072972	74,00
F1352HUN-8.93		1	○	RH1	5072973	74,00
F1352HUN-8.94		1	○	RH1	5072974	74,00
F1352HUN-8.95		1	○	RH1	5072975	74,00
F1352HUN-8.96		1	○	RH1	5072976	74,00
F1352HUN-8.97		1	○	RH1	5072977	74,00
F1352HUN-8.98		1	○	RH1	5072978	74,00
F1352HUN-8.99		1	●	RH1	5072979	74,00
F1352HUN-9		1	●	RH1	5072980	74,00
F1352HUN-9.01		1	●	RH1	5072981	74,00
F1352HUN-9.02		1	●	RH1	5072982	74,00
F1352HUN-9.03		1	●	RH1	5072983	74,00
F1352HUN-9.04		1	○	RH1	5072984	74,00
F1352HUN-9.05		1	●	RH1	5072985	74,00
F1352HUN-9.06		1	○	RH1	5072986	74,00
F1352HUN-9.07		1	●	RH1	5072987	74,00
F1352HUN-9.08		1	○	RH1	5072988	74,00
F1352HUN-9.09		1	○	RH1	5072989	74,00
F1352HUN-9.11		1	○	RH1	5072991	74,00
F1352HUN-9.12		1	○	RH1	5072992	74,00
F1352HUN-9.13		1	○	RH1	5072993	74,00
F1352HUN-9.14		1	○	RH1	5072994	74,00
F1352HUN-9.15		1	●	RH1	5072995	74,00
F1352HUN-9.16		1	○	RH1	5072996	74,00
F1352HUN-9.17		1	○	RH1	5072997	74,00
F1352HUN-9.18		1	○	RH1	5072998	74,00
F1352HUN-9.19		1	○	RH1	5072999	74,00
F1352HUN-9.21		1	○	RH1	5073001	74,00
F1352HUN-9.22		1	○	RH1	5073002	74,00
F1352HUN-9.23		1	○	RH1	5073003	74,00
F1352HUN-9.24		1	○	RH1	5073004	74,00
F1352HUN-9.25		1	○	RH1	5073005	74,00
F1352HUN-9.26		1	○	RH1	5073006	74,00
F1352HUN-9.27		1	○	RH1	5073007	74,00
F1352HUN-9.28		1	○	RH1	5073008	74,00
F1352HUN-9.29		1	○	RH1	5073009	74,00
F1352HUN-9.31		1	○	RH1	5073011	74,00
F1352HUN-9.32		1	○	RH1	5073012	74,00
F1352HUN-9.33		1	○	RH1	5073013	74,00

Bezeichnung / Designation	Sorte / Grade	VE / US		Disc. Gr.	Article No.	EURO Stück / piece
F1352HUN-9.34		1	○	RH1	5073014	74,00
F1352HUN-9.35		1	○	RH1	5073015	74,00
F1352HUN-9.36		1	○	RH1	5073016	74,00
F1352HUN-9.37		1	○	RH1	5073017	74,00
F1352HUN-9.38		1	○	RH1	5073018	74,00
F1352HUN-9.39		1	○	RH1	5073019	74,00
F1352HUN-9.41		1	○	RH1	5073021	74,00
F1352HUN-9.42		1	○	RH1	5073022	74,00
F1352HUN-9.43		1	○	RH1	5073023	74,00
F1352HUN-9.44		1	○	RH1	5073024	74,00
F1352HUN-9.45		1	●	RH1	5073025	74,00
F1352HUN-9.46		1	○	RH1	5073026	74,00
F1352HUN-9.47		1	○	RH1	5073027	74,00
F1352HUN-9.48		1	○	RH1	5073028	74,00
F1352HUN-9.49		1	○	RH1	5073029	74,00
F1352HUN-9.51		1	●	RH1	5073031	74,00
F1352HUN-9.52		1	●	RH1	5073032	74,00
F1352HUN-9.53		1	●	RH1	5073033	74,00
F1352HUN-9.54		1	●	RH1	5073034	74,00
F1352HUN-9.55		1	●	RH1	5073035	74,00
F1352HUN-9.56		1	●	RH1	5073036	74,00
F1352HUN-9.57		1	○	RH1	5073037	74,00
F1352HUN-9.58		1	○	RH1	5073038	74,00
F1352HUN-9.59		1	○	RH1	5073039	74,00
F1352HUN-9.61		1	○	RH1	5073041	74,00
F1352HUN-9.62		1	○	RH1	5073042	74,00
F1352HUN-9.63		1	○	RH1	5073043	74,00
F1352HUN-9.64		1	○	RH1	5073044	74,00
F1352HUN-9.65		1	○	RH1	5073045	74,00
F1352HUN-9.66		1	○	RH1	5073046	74,00
F1352HUN-9.67		1	○	RH1	5073047	74,00
F1352HUN-9.68		1	○	RH1	5073048	74,00
F1352HUN-9.69		1	○	RH1	5073049	74,00
F1352HUN-9.71		1	○	RH1	5073051	74,00
F1352HUN-9.72		1	○	RH1	5073052	74,00
F1352HUN-9.73		1	○	RH1	5073053	74,00
F1352HUN-9.74		1	○	RH1	5073054	74,00
F1352HUN-9.75		1	●	RH1	5073055	74,00
F1352HUN-9.76		1	○	RH1	5073056	74,00
F1352HUN-9.77		1	○	RH1	5073057	74,00
F1352HUN-9.78		1	○	RH1	5073058	74,00
F1352HUN-9.79		1	○	RH1	5073059	74,00
F1352HUN-9.81		1	○	RH1	5073061	74,00
F1352HUN-9.82		1	○	RH1	5073062	74,00
F1352HUN-9.83		1	○	RH1	5073063	74,00
F1352HUN-9.84		1	○	RH1	5073064	74,00
F1352HUN-9.85		1	○	RH1	5073065	74,00
F1352HUN-9.86		1	○	RH1	5073066	74,00
F1352HUN-9.87		1	○	RH1	5073067	74,00
F1352HUN-9.88		1	○	RH1	5073068	74,00
F1352HUN-9.89		1	○	RH1	5073069	74,00
F1352HUN-9.91		1	○	RH1	5073071	74,00
F1352HUN-9.92		1	○	RH1	5073072	74,00
F1352HUN-9.93		1	○	RH1	5073073	74,00
F1352HUN-9.94		1	○	RH1	5073074	74,00
F1352HUN-9.95		1	○	RH1	5073075	74,00
F1352HUN-9.96		1	○	RH1	5073076	74,00
F1352HUN-9.97		1	●	RH1	5073077	74,00
F1352HUN-9.98		1	●	RH1	5073078	74,00
F1352HUN-9.99		1	●	RH1	5073079	74,00
F1352HUN-10		1	●	RH1	5072041	74,00
F1352HUN-10.01		1	●	RH1	5072042	74,00
F1352HUN-10.02		1	●	RH1	5072043	74,00
F1352HUN-10.03		1	●	RH1	5072044	74,00
F1352HUN-10.04		1	●	RH1	5072045	74,00
F1352HUN-10.05		1	●	RH1	5072046	74,00
F1352HUN-10.06		1	●	RH1	5072047	74,00
F1352HUN-10.07		1	○	RH1	5072048	74,00
F1352HUN-10.08		1	○	RH1	5072049	74,00
F1352HUN-10.09		1	○	RH1	5072050	74,00

Bezeichnung / Designation	Sorte / Grade	VE / US		Disc. Gr.	Article No.	EURO Stück / piece
F1352HUN-10.1		1	●	RH1	5072051	74,00
F1352HUN-10.11		1	○	RH1	5072052	74,00
F1352HUN-10.12		1	○	RH1	5072053	74,00
F1352HUN-10.13		1	○	RH1	5072054	74,00
F1352HUN-10.14		1	○	RH1	5072055	74,00
F1352HUN-10.15		1	●	RH1	5072056	74,00
F1352HUN-10.16		1	○	RH1	5072057	74,00
F1352HUN-10.17		1	○	RH1	5072058	74,00
F1352HUN-10.18		1	○	RH1	5072059	74,00
F1352HUN-10.19		1	○	RH1	5072060	74,00
F1352HUN-10.2		1	●	RH1	5072061	74,00
F1352HUN-10.21		1	○	RH1	5072062	91,80
F1352HUN-10.22		1	●	RH1	5072063	91,80
F1352HUN-10.23		1	○	RH1	5072064	91,80
F1352HUN-10.24		1	○	RH1	5072065	91,80
F1352HUN-10.25		1	○	RH1	5072066	91,80
F1352HUN-10.26		1	○	RH1	5072067	91,80
F1352HUN-10.27		1	○	RH1	5072068	91,80
F1352HUN-10.28		1	○	RH1	5072069	91,80
F1352HUN-10.29		1	○	RH1	5072070	91,80
F1352HUN-10.31		1	○	RH1	5072072	91,80
F1352HUN-10.32		1	○	RH1	5072073	91,80
F1352HUN-10.33		1	○	RH1	5072074	91,80
F1352HUN-10.34		1	○	RH1	5072075	91,80
F1352HUN-10.35		1	○	RH1	5072076	91,80
F1352HUN-10.36		1	●	RH1	5072077	91,80
F1352HUN-10.37		1	○	RH1	5072078	91,80
F1352HUN-10.38		1	○	RH1	5072079	91,80
F1352HUN-10.39		1	○	RH1	5072080	91,80
F1352HUN-10.41		1	○	RH1	5072082	91,80
F1352HUN-10.42		1	○	RH1	5072083	91,80
F1352HUN-10.43		1	○	RH1	5072084	91,80
F1352HUN-10.44		1	○	RH1	5072085	91,80
F1352HUN-10.45		1	○	RH1	5072086	91,80
F1352HUN-10.46		1	○	RH1	5072087	91,80
F1352HUN-10.47		1	●	RH1	5072088	91,80
F1352HUN-10.48		1	○	RH1	5072089	91,80
F1352HUN-10.49		1	○	RH1	5072090	91,80
F1352HUN-10.51		1	○	RH1	5072092	91,80
F1352HUN-10.52		1	●	RH1	5072093	91,80
F1352HUN-10.53		1	○	RH1	5072094	91,80
F1352HUN-10.54		1	○	RH1	5072095	91,80
F1352HUN-10.55		1	○	RH1	5072096	91,80
F1352HUN-10.56		1	○	RH1	5072097	91,80
F1352HUN-10.57		1	○	RH1	5072098	91,80
F1352HUN-10.58		1	○	RH1	5072099	91,80
F1352HUN-10.59		1	○	RH1	5072100	91,80
F1352HUN-10.61		1	○	RH1	5072102	91,80
F1352HUN-10.62		1	○	RH1	5072103	91,80
F1352HUN-10.63		1	○	RH1	5072104	91,80
F1352HUN-10.64		1	○	RH1	5072105	91,80
F1352HUN-10.65		1	○	RH1	5072106	91,80
F1352HUN-10.66		1	○	RH1	5072107	91,80
F1352HUN-10.67		1	○	RH1	5072108	91,80
F1352HUN-10.68		1	○	RH1	5072109	91,80
F1352HUN-10.69		1	○	RH1	5072110	91,80
F1352HUN-10.71		1	○	RH1	5072112	91,80
F1352HUN-10.72		1	○	RH1	5072113	91,80
F1352HUN-10.73		1	○	RH1	5072114	91,80
F1352HUN-10.74		1	○	RH1	5072115	91,80
F1352HUN-10.75		1	○	RH1	5072116	91,80
F1352HUN-10.76		1	○	RH1	5072117	91,80
F1352HUN-10.77		1	○	RH1	5072118	91,80
F1352HUN-10.78		1	○	RH1	5072119	91,80
F1352HUN-10.79		1	○	RH1	5072120	91,80
F1352HUN-10.81		1	○	RH1	5072122	91,80
F1352HUN-10.82		1	○	RH1	5072123	91,80
F1352HUN-10.83		1	○	RH1	5072124	91,80
F1352HUN-10.84		1	○	RH1	5072125	91,80
F1352HUN-10.85		1	○	RH1	5072126	91,80

Bezeichnung / Designation	Sorte / Grade	VE / US		Disc. Gr.	Article No.	EURO Stück / piece
F1352HUN-10.86		1	○	RH1	5072127	91,80
F1352HUN-10.87		1	○	RH1	5072128	91,80
F1352HUN-10.88		1	○	RH1	5072129	91,80
F1352HUN-10.89		1	○	RH1	5072130	91,80
F1352HUN-10.91		1	○	RH1	5072132	91,80
F1352HUN-10.92		1	○	RH1	5072133	91,80
F1352HUN-10.93		1	○	RH1	5072134	91,80
F1352HUN-10.94		1	○	RH1	5072135	91,80
F1352HUN-10.95		1	○	RH1	5072136	91,80
F1352HUN-10.96		1	○	RH1	5072137	91,80
F1352HUN-10.97		1	○	RH1	5072138	91,80
F1352HUN-10.98		1	○	RH1	5072139	91,80
F1352HUN-10.99		1	○	RH1	5072140	91,80
F1352HUN-11.01		1	○	RH1	5072142	91,80
F1352HUN-11.02		1	●	RH1	5072143	91,80
F1352HUN-11.03		1	●	RH1	5072144	91,80
F1352HUN-11.04		1	●	RH1	5072145	91,80
F1352HUN-11.05		1	●	RH1	5072146	91,80
F1352HUN-11.06		1	●	RH1	5072147	91,80
F1352HUN-11.07		1	○	RH1	5072148	91,80
F1352HUN-11.08		1	○	RH1	5072149	91,80
F1352HUN-11.09		1	○	RH1	5072150	91,80
F1352HUN-11.1		1	●	RH1	5072151	91,80
F1352HUN-11.11		1	○	RH1	5072152	91,80
F1352HUN-11.12		1	○	RH1	5072153	91,80
F1352HUN-11.13		1	○	RH1	5072154	91,80
F1352HUN-11.14		1	○	RH1	5072155	91,80
F1352HUN-11.15		1	○	RH1	5072156	91,80
F1352HUN-11.16		1	○	RH1	5072157	91,80
F1352HUN-11.17		1	○	RH1	5072158	91,80
F1352HUN-11.18		1	○	RH1	5072159	91,80
F1352HUN-11.19		1	○	RH1	5072160	91,80
F1352HUN-11.2		1	○	RH1	5072161	91,80
F1352HUN-11.21		1	○	RH1	5072162	104,00
F1352HUN-11.22		1	○	RH1	5072163	104,00
F1352HUN-11.23		1	○	RH1	5072164	104,00
F1352HUN-11.24		1	○	RH1	5072165	104,00
F1352HUN-11.25		1	○	RH1	5072166	104,00
F1352HUN-11.26		1	○	RH1	5072167	104,00
F1352HUN-11.27		1	○	RH1	5072168	104,00
F1352HUN-11.28		1	○	RH1	5072169	104,00
F1352HUN-11.29		1	○	RH1	5072170	104,00
F1352HUN-11.3		1	○	RH1	5072171	104,00
F1352HUN-11.31		1	○	RH1	5072172	104,00
F1352HUN-11.32		1	○	RH1	5072173	104,00
F1352HUN-11.33		1	○	RH1	5072174	104,00
F1352HUN-11.34		1	○	RH1	5072175	104,00
F1352HUN-11.35		1	○	RH1	5072176	104,00
F1352HUN-11.36		1	○	RH1	5072177	104,00
F1352HUN-11.37		1	○	RH1	5072178	104,00
F1352HUN-11.38		1	○	RH1	5072179	104,00
F1352HUN-11.39		1	○	RH1	5072180	104,00
F1352HUN-11.4		1	○	RH1	5072181	104,00
F1352HUN-11.41		1	○	RH1	5072182	104,00
F1352HUN-11.42		1	○	RH1	5072183	104,00
F1352HUN-11.43		1	○	RH1	5072184	104,00
F1352HUN-11.44		1	●	RH1	5072185	104,00
F1352HUN-11.45		1	○	RH1	5072186	104,00
F1352HUN-11.46		1	○	RH1	5072187	104,00
F1352HUN-11.47		1	○	RH1	5072188	104,00
F1352HUN-11.48		1	○	RH1	5072189	104,00
F1352HUN-11.49		1	○	RH1	5072190	104,00
F1352HUN-11.51		1	○	RH1	5072192	104,00
F1352HUN-11.52		1	○	RH1	5072193	104,00
F1352HUN-11.53		1	○	RH1	5072194	104,00
F1352HUN-11.54		1	○	RH1	5072195	104,00
F1352HUN-11.55		1	○	RH1	5072196	104,00
F1352HUN-11.56		1	○	RH1	5072197	104,00
F1352HUN-11.57		1	○	RH1	5072198	104,00
F1352HUN-11.58		1	○	RH1	5072199	104,00

Bezeichnung / Designation	Sorte / Grade	VE / US		Disc. Gr.	Article No.	EURO Stück / piece
F1352HUN-11.59		1	○	RH1	5072200	**104,00**
F1352HUN-11.6		1	○	RH1	5072201	**104,00**
F1352HUN-11.61		1	○	RH1	5072202	**104,00**
F1352HUN-11.62		1	○	RH1	5072203	**104,00**
F1352HUN-11.63		1	○	RH1	5072204	**104,00**
F1352HUN-11.64		1	○	RH1	5072205	**104,00**
F1352HUN-11.65		1	○	RH1	5072206	**104,00**
F1352HUN-11.66		1	○	RH1	5072207	**104,00**
F1352HUN-11.67		1	○	RH1	5072208	**104,00**
F1352HUN-11.68		1	○	RH1	5072209	**104,00**
F1352HUN-11.69		1	○	RH1	5072210	**104,00**
F1352HUN-11.7		1	○	RH1	5072211	**104,00**
F1352HUN-11.71		1	○	RH1	5072212	**104,00**
F1352HUN-11.72		1	○	RH1	5072213	**104,00**
F1352HUN-11.73		1	○	RH1	5072214	**104,00**
F1352HUN-11.74		1	○	RH1	5072215	**104,00**
F1352HUN-11.75		1	○	RH1	5072216	**104,00**
F1352HUN-11.76		1	○	RH1	5072217	**104,00**
F1352HUN-11.77		1	○	RH1	5072218	**104,00**
F1352HUN-11.78		1	○	RH1	5072219	**104,00**
F1352HUN-11.79		1	○	RH1	5072220	**104,00**
F1352HUN-11.8		1	○	RH1	5072221	**104,00**
F1352HUN-11.81		1	○	RH1	5072222	**104,00**
F1352HUN-11.82		1	○	RH1	5072223	**104,00**
F1352HUN-11.83		1	○	RH1	5072224	**104,00**
F1352HUN-11.84		1	○	RH1	5072225	**104,00**
F1352HUN-11.85		1	○	RH1	5072226	**104,00**
F1352HUN-11.86		1	○	RH1	5072227	**104,00**
F1352HUN-11.87		1	○	RH1	5072228	**104,00**
F1352HUN-11.88		1	○	RH1	5072229	**104,00**
F1352HUN-11.89		1	○	RH1	5072230	**104,00**
F1352HUN-11.9		1	●	RH1	5072231	**104,00**
F1352HUN-11.91		1	○	RH1	5072232	**104,00**
F1352HUN-11.92		1	○	RH1	5072233	**104,00**
F1352HUN-11.93		1	○	RH1	5072234	**104,00**
F1352HUN-11.94		1	○	RH1	5072235	**104,00**
F1352HUN-11.95		1	○	RH1	5072236	**104,00**
F1352HUN-11.96		1	○	RH1	5072237	**104,00**
F1352HUN-11.97		1	●	RH1	5072238	**104,00**
F1352HUN-11.98		1	●	RH1	5072239	**104,00**
F1352HUN-11.99		1	●	RH1	5072240	**104,00**
F1352HUN-12		1	●	RH1	5072241	**104,00**
F1675.B.050.Z06.40.K	WKM	1	●	042	5001537	**574,00**
F1675.B.050.Z06.40.P	WP40	1	●	042	5001538	**574,00**
F1675.B.063.Z06.50.K	WKM	1	●	042	5001539	**658,00**
F1675.B.063.Z06.50.P	WP40	1	●	042	5001540	**658,00**
F1675.B.080.Z08.50.K	WKM	1	●	042	5001541	**860,00**
F1675.B.080.Z08.50.P	WP40	1	●	042	5001542	**860,00**
F1678.W.025.Z04.50.K	WKM	1	●	042	5001572	**453,00**
F1678.W.032.Z04.50.K	WKM	1	●	042	5001575	**487,00**
F1678.W.032.Z04.50.P	WP40	1	●	042	5001574	**487,00**
F1678.W.040.Z06.63.K	WKM	1	●	042	5001576	**645,00**
F1678.W.040.Z06.63.P	WP40	1	●	042	5001577	**645,00**
F1682.N6.040.Z06.63.K	WKM	1	●	042	5001612	**916,00**
F1682.N6.040.Z06.63.P	WP40	1	●	042	5001611	**916,00**
F1682.N8.050.Z06.80.P	WP40	1	●	042	5001614	**1.103,00**
F1682.N8.063.Z06.100.K	WKM	1	●	042	5001615	**1.313,00**
F1682.N8.063.Z06.100.P	WP40	1	●	042	5001616	**1.313,00**
F2010.B.080.Z06.02.R681M		1	●	040	5204602	**987,00**
F2010.B.080.Z06.02.R729M		1	●	040	5204572	**987,00**
F2010.B.080.Z06.04.R592M		1	●	040	5000392	**987,00**
F2010.B.080.Z06.04.R759M		1	●	040	7469941	**987,00**
F2010.B.080.Z06.06.R455M		1	●	040	5000227	**987,00**
F2010.B.080.Z06.06.R720M		1	●	040	5055670	**987,00**
F2010.B.080.Z06.06.R758M		1	●	040	7469812	**987,00**
F2010.B.080.Z06.07.R495M		1	●	040	5000248	**987,00**
F2010.B.080.Z06.08.R723M		1	●	040	5170247	**987,00**
F2010.B.080.Z06.08.R751M		1	●	040	6583201	**987,00**
F2010.B.080.Z06.08.R755M		1	●	040	6835821	**987,00**
F2010.B.080.Z06.08.R756M		1	●	040	6835002	**987,00**

Bezeichnung / Designation	Sorte / Grade	VE / US		Disc. Gr.	Article No.	EURO Stück / piece
F2010.B.080.Z06.08.R757M		1	●	040	6835031	**987,00**
F2010.B.080.Z06.09.R500M		1	●	040	5000476	**987,00**
F2010.B.080.Z06.10.R441M		1	●	040	5000202	**987,00**
F2010.B.080.Z06.10.R728M		1	●	040	5204609	**987,00**
F2010.B.080.Z06.11.R445M		1	●	040	5000206	**987,00**
F2010.B.080.Z06.11.R718M		1	●	040	5055656	**987,00**
F2010.B.080.Z06.11.R764M		1	●	040	8414014	**987,00**
F2010.B.080.Z06.12.R752M		1	●	040	6583210	**987,00**
F2010.B.080.Z06.13.R722M		1	●	040	5204403	**987,00**
F2010.B.080.Z06.15.R719M		1	●	040	5055663	**987,00**
F2010.B.080.Z06.15.R765M		1	●	040	8413965	**987,00**
F2010.B.100.Z07.02.R681M		1	●	040	5204603	**1.120,00**
F2010.B.100.Z07.02.R729M		1	●	040	5204573	**1.120,00**
F2010.B.100.Z07.04.R592M		1	●	040	5000393	**1.120,00**
F2010.B.100.Z07.04.R759M		1	●	040	7469942	**1.120,00**
F2010.B.100.Z07.06.R455M		1	●	040	5000228	**1.120,00**
F2010.B.100.Z07.06.R720M		1	●	040	5055671	**1.120,00**
F2010.B.100.Z07.06.R758M		1	●	040	7469813	**1.120,00**
F2010.B.100.Z07.07.R495M		1	●	040	5000249	**1.120,00**
F2010.B.100.Z07.08.R723M		1	●	040	5170248	**1.120,00**
F2010.B.100.Z07.08.R751M		1	●	040	6583202	**1.120,00**
F2010.B.100.Z07.08.R755M		1	●	040	6835822	**1.120,00**
F2010.B.100.Z07.08.R756M		1	●	040	6835003	**1.120,00**
F2010.B.100.Z07.08.R757M		1	●	040	6835032	**1.120,00**
F2010.B.100.Z07.09.R500M		1	●	040	5000477	**1.120,00**
F2010.B.100.Z07.10.R441M		1	●	040	5000203	**1.120,00**
F2010.B.100.Z07.10.R728M		1	●	040	5204620	**1.120,00**
F2010.B.100.Z07.11.R445M		1	●	040	5000207	**1.120,00**
F2010.B.100.Z07.11.R718M		1	●	040	5055657	**1.120,00**
F2010.B.100.Z07.11.R764M		1	●	040	8414015	**1.120,00**
F2010.B.100.Z07.12.R752M		1	●	040	6583211	**1.120,00**
F2010.B.100.Z07.13.R722M		1	●	040	5204436	**1.120,00**
F2010.B.100.Z07.15.R719M		1	●	040	5055664	**1.120,00**
F2010.B.100.Z07.15.R765M		1	●	040	8413966	**1.120,00**
F2010.B.125.Z08.02.R681M		1	●	040	5204604	**1.387,00**
F2010.B.125.Z08.02.R729M		1	●	040	5204574	**1.387,00**
F2010.B.125.Z08.04.R592M		1	●	040	5000389	**1.387,00**
F2010.B.125.Z08.04.R759M		1	●	040	7469943	**1.387,00**
F2010.B.125.Z08.06.R455M		1	●	040	5000229	**1.387,00**
F2010.B.125.Z08.06.R720M		1	●	040	5055672	**1.387,00**
F2010.B.125.Z08.06.R758M		1	●	040	7469814	**1.387,00**
F2010.B.125.Z08.07.R495M		1	●	040	5000250	**1.387,00**
F2010.B.125.Z08.08.R723M		1	●	040	5170249	**1.387,00**
F2010.B.125.Z08.08.R751M		1	●	040	6583203	**1.387,00**
F2010.B.125.Z08.08.R755M		1	●	040	6835823	**1.387,00**
F2010.B.125.Z08.08.R756M		1	●	040	6835004	**1.387,00**
F2010.B.125.Z08.08.R757M		1	●	040	6835033	**1.387,00**
F2010.B.125.Z08.09.R500M		1	●	040	5000478	**1.387,00**
F2010.B.125.Z08.10.R441M		1	●	040	5000204	**1.387,00**
F2010.B.125.Z08.10.R728M		1	●	040	5204621	**1.387,00**
F2010.B.125.Z08.11.R445M		1	●	040	5000208	**1.387,00**
F2010.B.125.Z08.11.R718M		1	●	040	5055658	**1.387,00**
F2010.B.125.Z08.11.R764M		1	●	040	8414016	**1.387,00**
F2010.B.125.Z08.12.R752M		1	●	040	6583212	**1.387,00**
F2010.B.125.Z08.13.R722M		1	●	040	5204437	**1.387,00**
F2010.B.125.Z08.15.R719M		1	●	040	5055665	**1.387,00**
F2010.B.125.Z08.15.R765M		1	●	040	8413967	**1.387,00**
F2010.B.160.Z10.02.R681M		1	●	040	5204605	**1.669,00**
F2010.B.160.Z10.02.R729M		1	●	040	5204575	**1.669,00**
F2010.B.160.Z10.04.R592M		1	●	040	5000394	**1.669,00**
F2010.B.160.Z10.04.R759M		1	●	040	7469944	**1.669,00**
F2010.B.160.Z10.06.R455M		1	●	040	5000230	**1.669,00**
F2010.B.160.Z10.06.R720M		1	●	040	5055673	**1.669,00**
F2010.B.160.Z10.06.R758M		1	●	040	7469815	**1.669,00**
F2010.B.160.Z10.07.R495M		1	●	040	5000251	**1.669,00**
F2010.B.160.Z10.08.R723M		1	●	040	5171060	**1.669,00**
F2010.B.160.Z10.08.R751M		1	●	040	6583204	**1.669,00**
F2010.B.160.Z10.08.R755M		1	●	040	6835824	**1.669,00**
F2010.B.160.Z10.08.R756M		1	●	040	6835005	**1.669,00**
F2010.B.160.Z10.08.R757M		1	●	040	6835034	**1.669,00**

Bezeichnung / Designation	Sorte / Grade	VE / US		Disc. Gr.	Article No.	EURO Stück / piece
F2010.B.160.Z10.09.R500M		1	●	040	5000479	1.669,00
F2010.B.160.Z10.10.R441M		1	●	040	5000205	1.669,00
F2010.B.160.Z10.10.R728M		1	●	040	5204622	1.669,00
F2010.B.160.Z10.11.R445M		1	●	040	5000209	1.669,00
F2010.B.160.Z10.11.R718M		1	●	040	5055659	1.669,00
F2010.B.160.Z10.11.R764M		1	●	040	8414017	1.669,00
F2010.B.160.Z10.12.R752M		1	●	040	6583213	1.669,00
F2010.B.160.Z10.13.R722M		1	●	040	5204438	1.669,00
F2010.B.160.Z10.15.R719M		1	●	040	5055666	1.669,00
F2010.B.160.Z10.15.R765M		1	●	040	8413968	1.669,00
F2010.B.200.Z12.02.R681M		1	●	040	5204606	2.138,00
F2010.B.200.Z12.02.R729M		1	●	040	5204577	2.138,00
F2010.B.200.Z12.04.R592M		1	●	040	5000395	2.138,00
F2010.B.200.Z12.04.R759M		1	●	040	7469945	2.138,00
F2010.B.200.Z12.06.R455M		1	●	040	5000231	2.138,00
F2010.B.200.Z12.06.R720M		1	●	040	5055674	2.138,00
F2010.B.200.Z12.06.R758M		1	●	040	7469816	2.138,00
F2010.B.200.Z12.07.R495M		1	●	040	5000252	2.138,00
F2010.B.200.Z12.08.R723M		1	●	040	5171061	2.138,00
F2010.B.200.Z12.08.R751M		1	●	040	6583205	2.138,00
F2010.B.200.Z12.08.R755M		1	●	040	6835825	2.138,00
F2010.B.200.Z12.08.R756M		1	●	040	6835006	2.138,00
F2010.B.200.Z12.08.R757M		1	●	040	6835035	2.138,00
F2010.B.200.Z12.09.R500M		1	●	040	5000480	2.138,00
F2010.B.200.Z12.10.R441M		1	●	040	5000218	2.138,00
F2010.B.200.Z12.10.R728M		1	●	040	5204623	2.138,00
F2010.B.200.Z12.11.R445M		1	●	040	5000219	2.138,00
F2010.B.200.Z12.11.R718M		1	●	040	5055660	2.138,00
F2010.B.200.Z12.11.R764M		1	●	040	8414018	2.138,00
F2010.B.200.Z12.12.R752M		1	●	040	6583214	2.138,00
F2010.B.200.Z12.13.R722M		1	●	040	5204439	2.138,00
F2010.B.200.Z12.15.R719M		1	●	040	5055667	2.138,00
F2010.B.200.Z12.15.R765M		1	●	040	8413969	2.138,00
F2010.B.250.Z12.02.R729M		1	●	040	5204600	2.295,00
F2010.B.250.Z12.04.R592M		1	●	040	5000390	2.295,00
F2010.B.250.Z12.04.R759M		1	●	040	7469946	2.295,00
F2010.B.250.Z12.06.R455M		1	●	040	5000258	2.295,00
F2010.B.250.Z12.06.R720M		1	●	040	5055675	2.295,00
F2010.B.250.Z12.06.R758M		1	●	040	7469817	2.295,00
F2010.B.250.Z12.07.R495M		1	●	040	5000306	2.295,00
F2010.B.250.Z12.08.R723M		1	●	040	5171062	2.295,00
F2010.B.250.Z12.08.R751M		1	●	040	6583206	2.295,00
F2010.B.250.Z12.08.R755M		1	●	040	6835826	2.295,00
F2010.B.250.Z12.08.R756M		1	●	040	6835007	2.295,00
F2010.B.250.Z12.08.R757M		1	●	040	6835036	2.295,00
F2010.B.250.Z12.09.R500M		1	●	040	5000356	2.295,00
F2010.B.250.Z12.10.R441M		1	●	040	5000322	2.295,00
F2010.B.250.Z12.10.R728M		1	●	040	5204624	2.295,00
F2010.B.250.Z12.11.R445M		1	●	040	5000302	2.295,00
F2010.B.250.Z12.11.R718M		1	●	040	5055661	2.295,00
F2010.B.250.Z12.11.R764M		1	●	040	8414019	2.295,00
F2010.B.250.Z12.12.R752M		1	●	040	6583215	2.295,00
F2010.B.250.Z12.13.R722M		1	●	040	5204570	2.295,00
F2010.B.250.Z12.15.R719M		1	●	040	5055668	2.295,00
F2010.B.250.Z12.15.R765M		1	●	040	8414010	2.295,00
F2010.B.250.Z16.02.R681M		1	●	040	5204607	2.734,00
F2010.B.250.Z16.02.R729M		1	●	040	5204601	2.734,00
F2010.B.250.Z16.04.R592M		1	●	040	5000396	2.734,00
F2010.B.250.Z16.04.R759M		1	●	040	7469947	2.734,00
F2010.B.250.Z16.06.R455M		1	●	040	5000259	2.734,00
F2010.B.250.Z16.06.R720M		1	●	040	5055676	2.734,00
F2010.B.250.Z16.06.R758M		1	●	040	7469818	2.734,00
F2010.B.250.Z16.07.R495M		1	●	040	5000307	2.734,00
F2010.B.250.Z16.08.R723M		1	●	040	5171063	2.734,00
F2010.B.250.Z16.08.R751M		1	●	040	6583207	2.734,00
F2010.B.250.Z16.08.R755M		1	●	040	6835827	2.734,00
F2010.B.250.Z16.08.R756M		1	●	040	6835008	2.734,00
F2010.B.250.Z16.08.R757M		1	●	040	6835037	2.734,00
F2010.B.250.Z16.09.R500M		1	●	040	5000357	2.734,00
F2010.B.250.Z16.10.R441M		1	●	040	5000323	2.734,00

Bezeichnung / Designation	Sorte / Grade	VE / US		Disc. Gr.	Article No.	EURO Stück / piece
F2010.B.250.Z16.10.R728M		1	●	040	5204625	2.734,00
F2010.B.250.Z16.11.R445M		1	●	040	5000303	2.734,00
F2010.B.250.Z16.11.R718M		1	●	040	5055662	2.734,00
F2010.B.250.Z16.11.R764M		1	●	040	8414020	2.734,00
F2010.B.250.Z16.12.R752M		1	●	040	6583216	2.734,00
F2010.B.250.Z16.13.R722M		1	●	040	5204571	2.734,00
F2010.B.250.Z16.15.R719M		1	●	040	5055669	2.734,00
F2010.B.250.Z16.15.R765M		1	●	040	8414011	2.734,00
F2010.B.315.Z14.02.R729M		1	●	040	5400918	3.145,00
F2010.B.315.Z14.04.R592M		1	●	040	5000391	3.145,00
F2010.B.315.Z14.04.R759M		1	●	040	7469948	3.145,00
F2010.B.315.Z14.06.R455M		1	●	040	5000260	3.145,00
F2010.B.315.Z14.06.R720M		1	●	040	5400933	3.145,00
F2010.B.315.Z14.06.R758M		1	●	040	7469819	3.145,00
F2010.B.315.Z14.07.R495M		1	●	040	5000308	3.145,00
F2010.B.315.Z14.08.R723M		1	●	040	5400971	3.145,00
F2010.B.315.Z14.08.R751M		1	●	040	6583208	3.145,00
F2010.B.315.Z14.08.R755M		1	●	040	6835828	3.145,00
F2010.B.315.Z14.08.R756M		1	●	040	6835009	3.145,00
F2010.B.315.Z14.08.R757M		1	●	040	6835038	3.145,00
F2010.B.315.Z14.09.R500M		1	●	040	5000358	3.145,00
F2010.B.315.Z14.10.R441M		1	●	040	5000324	3.145,00
F2010.B.315.Z14.10.R728M		1	●	040	5400937	3.145,00
F2010.B.315.Z14.11.R445M		1	●	040	5000304	3.145,00
F2010.B.315.Z14.11.R718M		1	●	040	5400939	3.145,00
F2010.B.315.Z14.11.R764M		1	●	040	8414021	3.145,00
F2010.B.315.Z14.12.R752M		1	●	040	6583217	3.145,00
F2010.B.315.Z14.13.R722M		1	●	040	5400956	3.145,00
F2010.B.315.Z14.15.R719M		1	●	040	5400953	3.145,00
F2010.B.315.Z14.15.R765M		1	●	040	8414012	3.145,00
F2010.B.315.Z18.02.R681M		1	●	040	5204608	3.636,00
F2010.B.315.Z18.02.R729M		1	●	040	5400932	3.636,00
F2010.B.315.Z18.04.R592M		1	●	040	5000397	3.636,00
F2010.B.315.Z18.04.R759M		1	●	040	7469949	3.636,00
F2010.B.315.Z18.06.R455M		1	●	040	5000261	3.636,00
F2010.B.315.Z18.06.R720M		1	●	040	5400934	3.636,00
F2010.B.315.Z18.06.R758M		1	●	040	7469820	3.636,00
F2010.B.315.Z18.07.R495M		1	●	040	5000309	3.636,00
F2010.B.315.Z18.08.R723M		1	●	040	5400973	3.636,00
F2010.B.315.Z18.08.R751M		1	●	040	6583209	3.636,00
F2010.B.315.Z18.08.R755M		1	●	040	6835829	3.636,00
F2010.B.315.Z18.08.R756M		1	●	040	6835030	3.636,00
F2010.B.315.Z18.08.R757M		1	●	040	6835039	3.636,00
F2010.B.315.Z18.09.R500M		1	●	040	5000359	3.636,00
F2010.B.315.Z18.10.R441M		1	●	040	5000325	3.636,00
F2010.B.315.Z18.10.R728M		1	●	040	5400938	3.636,00
F2010.B.315.Z18.11.R445M		1	●	040	5000305	3.636,00
F2010.B.315.Z18.11.R718M		1	●	040	5400950	3.636,00
F2010.B.315.Z18.11.R764M		1	●	040	8414022	3.636,00
F2010.B.315.Z18.12.R752M		1	●	040	6583218	3.636,00
F2010.B.315.Z18.13.R722M		1	●	040	5400958	3.636,00
F2010.B.315.Z18.15.R719M		1	●	040	5400954	3.636,00
F2010.B.315.Z18.15.R765M		1	●	040	8414013	3.636,00
F2010.UB.076.Z06.11R764M		1	●	040	8424286	987,00
F2010.UB.076.Z06.15R765M		1	●	040	8424249	987,00
F2010.UB.102.Z07.11R764M		1	●	040	8424287	1.120,00
F2010.UB.102.Z07.15R765M		1	●	040	8424248	1.120,00
F2010.UB.127.Z08.11R764M		1	●	040	8424288	1.387,00
F2010.UB.127.Z08.15R765M		1	●	040	8424280	1.387,00
F2010.UB.152.Z10.11R764M		1	●	040	8424289	1.669,00
F2010.UB.152.Z10.15R765M		1	●	040	8424281	1.669,00
F2010.UB.203.Z12.11R764M		1	●	040	8424290	2.138,00
F2010.UB.203.Z12.15R765M		1	●	040	8424282	2.138,00
F2010.UB.254.Z12.11R764M		1	●	040	8424291	2.295,00
F2010.UB.254.Z12.15R765M		1	●	040	8424283	2.295,00
F2010.UB.254.Z16.11R764M		1	●	040	8424292	2.734,00
F2010.UB.254.Z16.15R765M		1	●	040	8424284	2.734,00
F2010.UB.305.Z18.11R764M		1	●	040	8424293	3.636,00
F2010.UB.305.Z18.15R765M		1	●	040	8424285	3.636,00
F2036.5.16.090.016		1	●	048	5000957	351,00

Bezeichnung / Designation	Sorte / Grade	VE / US		Disc. Gr.	Article No.	EURO Stück / piece
F2036.5.25.130.025		1	●	048	5000958	520,00
F2036.5.32.140.040		1	●	048	5000959	696,00
F2036M.0.50.040.063		1	●	048	5000960	955,00
F2139.5.08.070.08-CS		1	■	048	5001332[1]	289,00
F2139.5.08.100.08-CS		1	■	048	5001333[1]	318,00
F2139.5.10.080.10-CS		1	■	048	5001334[1]	324,00
F2139.5.10.120.10-CS		1	■	048	5001335[1]	361,00
F2139.5.12.090.12-CS		1	■	048	5001336[1]	409,00
F2139.5.12.145.12-CS		1	■	048	5001337[1]	455,00
F2139.5.16.110.16-CS		1	■	048	5001338[1]	504,00
F2139.5.16.195.16-CS		1	■	048	5001339[1]	625,00
F2139.5.20.130.20-CS		1	■	048	5001340[1]	685,00
F2139.5.20.240.20-CS		1	●	048	5001341[1]	861,00
F2139.T09.008.Z02.04		1	■	048	5015376[1]	162,00
F2139.T09.010.Z02.05		1	■	048	5015377[1]	173,00
F2139.T09.012.Z02.06		1	■	048	5015378[1]	183,00
F2139.T14.012.Z02.06		1	■	048	5020730[1]	183,00
F2139.T14.016.Z02.08		1	■	048	5020731[1]	197,00
F2139.T18.020.Z02.10		1	■	048	5020732[1]	229,00
F2139.T22.025.Z02.12		1	■	048	5020733[1]	252,00
F2139.T28.030.Z02.15		1	■	048	5020734[1]	324,00
F2139.T28.032.Z02.16		1	■	048	5020735[1]	324,00
F2162-4		1	●	RS1	6250191	83,70
F2162-4.5		1	●	RS1	6250192	83,70
F2162-5		1	●	RS1	6250193	83,70
F2162-5.5		1	●	RS1	6250194	83,70
F2162-6		1	●	RS1	6250195	83,70
F2162-6.5		1	●	RS1	6250196	91,30
F2162-7		1	●	RS1	6250197	91,30
F2162-7.5		1	●	RS1	6250198	91,30
F2162-8		1	●	RS1	6250199	91,30
F2162-8.5		1	●	RS1	6250200	106,00
F2162-9		1	●	RS1	6250201	106,00
F2162-9.5		1	●	RS1	6250202	106,00
F2162-10		1	●	RS1	6250203	106,00
F2162-11		1	●	RS1	6250204	133,00
F2162-12		1	●	RS1	6250205	133,00
F2162-13		1	●	RS1	6250206	160,00
F2162-14		1	●	RS1	6250207	176,00
F2162-15		1	●	RS1	6250208	192,00
F2162-16		1	●	RS1	6250209	192,00
F2162-17		1	●	RS1	6250210	205,00
F2162-18		1	●	RS1	6250211	205,00
F2162-20		1	●	RS1	6250212	218,00
F2171-2		1	●	RS1	6250213	53,50
F2171-2.5		1	●	RS1	6250214	58,60
F2171-3		1	●	RS1	6250215	74,60
F2171-3.2		1	●	RS1	6250216	74,60
F2171-3.5		1	●	RS1	6250217	74,60
F2171-4		1	●	RS1	6250218	74,60
F2171-4.5		1	●	RS1	6250219	74,60
F2171-5		1	●	RS1	6250220	74,60
F2171-5.5		1	●	RS1	6250221	74,60
F2171-6		1	●	RS1	6250222	74,60
F2171-6.5		1	●	RS1	6250223	81,40
F2171-7		1	●	RS1	6250224	81,40
F2171-7.5		1	●	RS1	6250225	81,40
F2171-8		1	●	RS1	6250226	81,40
F2171-8.5		1	●	RS1	6250227	95,00
F2171-9		1	●	RS1	6250228	95,00
F2171-10		1	●	RS1	6250229	95,00
F2171-11		1	●	RS1	6250230	119,00
F2171-12		1	●	RS1	6250231	119,00
F2171-13		1	●	RS1	6250232	142,00
F2171-14		1	●	RS1	6250233	157,00
F2171-15		1	●	RS1	6250234	172,00
F2171-16		1	●	RS1	6250235	172,00
F2171-18		1	●	RS1	6250236	183,00
F2171-20		1	●	RS1	6250237	194,00
F2231.W.016.Z02.04.XL		1	■	048	5001104[1]	235,00

Bezeichnung / Designation	Sorte / Grade	VE / US		Disc. Gr.	Article No.	EURO Stück / piece
F2231.W.020.Z02.05.XL		1	■	048	5001105[1]	266,00
F2231.W.032.Z02.08.XL		1	■	048	5001107[1]	321,00
F2234.B.050.Z04.08		1	●	048	5001069[2]	483,00
F2234.B.160.Z08.10		1	■	048	5001080[1]	1.331,00
F2234.W.040.Z04.06		1	■	048	5001115[1]	462,00
F2238CE.C.050.Z02.024		1	●	048	5043068	605,00
F2238CE.C.063.Z02.034		1	●	048	5043070	680,00
F2238CE.C.063.Z02.044		1	●	048	5001459	848,00
F2238CE.C.080.Z03.024		1	●	048	5043071	712,00
F2238CE.C.080.Z03.034		1	●	048	5043072	822,00
F2238CE.C.080.Z03.044		1	●	048	5001460	1.025,00
F2239.N5.050.Z01.46		1	●	048	5001042	794,00
F2239.N5.050.Z01.77		1	●	048	5001043	1.232,00
F2239.N6.063.Z01.53		1	●	048	5001044	850,00
F2239.N6.063.Z01.84		1	●	048	5001045	1.294,00
F2239.T18.020.Z01.15		1	●	048	5020739	452,00
F2239.T22.025.Z01.18		1	●	048	5020740	457,00
F2239.T28.030.Z01.23		1	●	048	5020741	476,00
F2239.T28.032.Z01.24		1	●	048	5020742	476,00
F2239.T36.040.Z01.41		1	●	048	5015379	504,00
F2239.T45.050.Z01.46		1	●	048	5015380	589,00
F2239.TC10.020.Z01.15		1	●	048	7785452	406,00
F2239.TC12.025.Z01.18		1	●	048	7785453	429,00
F2239.TC16.030.Z01.23		1	●	048	7785454	453,00
F2239.TC16.032.Z01.24		1	●	048	7785455	453,00
F2239.W.020.Z01.25		1	●	048	5001363	587,00
F2239.W.025.Z01.28		1	●	048	5001364	593,00
F2239.W.032.Z01.38		1	●	048	5001365	614,00
F2239.W.040.Z01.51		1	●	048	5001366	657,00
F2239B.T14.020.Z01.10		1	●	048	5020744	452,00
F2239B.T18.025.Z01.12		1	●	048	5020743	457,00
F2239B.T22.030.Z01.15		1	●	048	5020745	476,00
F2239B.T22.032.Z01.16		1	●	048	5020746	476,00
F2239B.T28.040.Z01.20		1	●	048	5020747	517,00
F2239B.TC08.020.Z01.10		1	●	048	7785456	406,00
F2239B.TC10.025.Z01.12		1	●	048	7785457	429,00
F2239B.TC12.030.Z01.15		1	●	048	7785458	453,00
F2239B.TC12.032.Z01.16		1	●	048	7785459	453,00
F2239B.TC16.040.Z01.20		1	●	048	7785460	477,00
F2250.B22.063.Z05.03		1	●	048	5118901	900,00
F2250.B27.080.Z06.03		1	●	048	5118902	1.011,00
F2250.B32.100.Z07.03		1	●	048	5118903	1.124,00
F2252.B.080.Z03.08.S684		1	●	040	5000679	1.103,00
F2252.B.080.Z03.09.S684		1	●	040	5000680	1.103,00
F2252.B.100.Z04.08.S684		1	●	040	5000681	1.463,00
F2252.B.100.Z04.09.S684		1	●	040	5000682	1.463,00
F2252.B.100.Z04.10.S685		1	●	040	5000687	1.463,00
F2252.B.100.Z04.12.S685		1	●	040	5000688	1.463,00
F2252.B.100.Z04.12.S724		1	●	040	5159933	1.463,00
F2252.B.100.Z04.14.S685		1	●	040	5000689	1.463,00
F2252.B.100.Z04.14.S724		1	●	040	5159934	1.463,00
F2252.B.125.Z04.16.S686		1	●	040	5000696	1.595,00
F2252.B.125.Z04.16.S725		1	●	040	5159939	1.595,00
F2252.B.125.Z04.19.S686		1	●	040	5000697	1.595,00
F2252.B.125.Z04.19.S725		1	●	040	5159940	1.595,00
F2252.B.125.Z04.22.S686		1	●	040	5000698	1.595,00
F2252.B.125.Z04.22.S726		1	●	040	5159949	1.595,00
F2252.B.125.Z05.08.S684		1	●	040	5000683	1.704,00
F2252.B.125.Z05.09.S684		1	●	040	5000684	1.704,00
F2252.B.125.Z05.10.S685		1	●	040	5000690	1.704,00
F2252.B.125.Z05.12.S685		1	●	040	5000691	1.704,00
F2252.B.125.Z05.12.S724		1	●	040	5159935	1.704,00
F2252.B.125.Z05.14.S685		1	●	040	5000692	1.704,00
F2252.B.125.Z05.14.S724		1	●	040	5159936	1.704,00
F2252.B.160.Z05.16.S686		1	●	040	5000699	1.907,00
F2252.B.160.Z05.16.S725		1	●	040	5159941	1.907,00
F2252.B.160.Z05.19.S686		1	●	040	5000700	1.907,00
F2252.B.160.Z05.19.S725		1	●	040	5159942	1.907,00
F2252.B.160.Z05.22.S686		1	●	040	5000701	1.907,00
F2252.B.160.Z05.22.S726		1	●	040	5159950	1.907,00

Bezeichnung / Designation	Sorte / Grade	VE / US		Disc. Gr.	Article No.	EURO Stück / piece
F2252.B.160.Z06.08.S684		1	●	040	5000685	2.081,00
F2252.B.160.Z06.09.S684		1	●	040	5000686	2.081,00
F2252.B.160.Z06.10.S685		1	●	040	5000693	2.081,00
F2252.B.160.Z06.12.S685		1	●	040	5000694	2.081,00
F2252.B.160.Z06.12.S724		1	●	040	5159937	2.081,00
F2252.B.160.Z06.14.S685		1	●	040	5000695	2.081,00
F2252.B.160.Z06.14.S724		1	●	040	5159938	2.081,00
F2252.B.200.Z06.16.S686		1	●	040	5000702	2.265,00
F2252.B.200.Z06.16.S725		1	●	040	5159943	2.265,00
F2252.B.200.Z06.19.S725		1	●	040	5159944	2.265,00
F2252.B.200.Z06.22.S726		1	●	040	5159951	2.265,00
F2252.BN.080.Z03.08.S684		1	●	040	5000710	1.154,00
F2252.BN.080.Z03.09.S684		1	●	040	5000711	1.154,00
F2252.BN.100.Z04.08.S684		1	●	040	5000712	1.535,00
F2252.BN.100.Z04.09.S684		1	●	040	5000713	1.535,00
F2252.BN.100.Z04.10.S685		1	●	040	5000718	1.535,00
F2252.BN.100.Z04.12.S685		1	●	040	5000719	1.535,00
F2252.BN.100.Z04.12.S724		1	●	040	5159953	1.535,00
F2252.BN.100.Z04.14.S724		1	●	040	5159954	1.535,00
F2252.BN.125.Z04.16.S686		1	●	040	5000727	1.676,00
F2252.BN.125.Z04.16.S725		1	●	040	5159959	1.676,00
F2252.BN.125.Z04.19.S686		1	●	040	5000728	1.676,00
F2252.BN.125.Z04.19.S725		1	●	040	5159960	1.676,00
F2252.BN.125.Z04.22.S686		1	●	040	5000729	1.676,00
F2252.BN.125.Z04.22.S726		1	●	040	5159969	1.676,00
F2252.BN.125.Z05.08.S684		1	●	040	5000714	1.790,00
F2252.BN.125.Z05.09.S684		1	●	040	5000715	1.790,00
F2252.BN.125.Z05.10.S685		1	●	040	5000721	1.790,00
F2252.BN.125.Z05.12.S685		1	●	040	5000722	1.790,00
F2252.BN.125.Z05.12.S724		1	●	040	5159955	1.790,00
F2252.BN.125.Z05.14.S685		1	●	040	5000723	1.790,00
F2252.BN.125.Z05.14.S724		1	●	040	5159956	1.790,00
F2252.BN.160.Z05.16.S686		1	●	040	5000730	2.000,00
F2252.BN.160.Z05.16.S725		1	●	040	5159961	2.000,00
F2252.BN.160.Z05.19.S686		1	●	040	5000731	2.000,00
F2252.BN.160.Z05.19.S725		1	●	040	5159962	2.000,00
F2252.BN.160.Z05.22.S686		1	●	040	5000732	2.000,00
F2252.BN.160.Z05.22.S726		1	●	040	5159970	2.000,00
F2252.BN.160.Z06.08.S684		1	●	040	5000716	2.187,00
F2252.BN.160.Z06.09.S684		1	●	040	5000717	2.187,00
F2252.BN.160.Z06.10.S685		1	●	040	5000724	2.187,00
F2252.BN.160.Z06.12.S685		1	●	040	5000725	2.187,00
F2252.BN.160.Z06.12.S724		1	●	040	5159957	2.187,00
F2252.BN.160.Z06.14.S685		1	●	040	5000726	2.187,00
F2252.BN.160.Z06.14.S724		1	●	040	5159958	2.187,00
F2252.BN.200.Z06.16.S686		1	●	040	5000733	2.380,00
F2252.BN.200.Z06.16.S725		1	●	040	5159963	2.380,00
F2252.BN.200.Z06.19.S686		1	●	040	5000734	2.380,00
F2252.BN.200.Z06.19.S725		1	●	040	5159964	2.380,00
F2252.BN.200.Z06.22.S686		1	●	040	5000735	2.380,00
F2252.BN.200.Z06.22.S726		1	●	040	5159971	2.380,00
F2260.B.100.Z06.11		1	●	048	5000453	1.199,00
F2260.B.125.Z08.11		1	●	048	5000452	1.381,00
F2260.B.160.Z10.11		1	●	048	5000451	1.755,00
F2260.B.200.Z12.11		1	●	048	5000450	2.125,00
F2260.B.250.Z14.11		1	●	048	5000454	2.500,00
F2330.B.052.Z03.02		1	●	048	5033037	424,00
F2330.B.052.Z05.01,5		1	●	048	5054671	467,00
F2330.B.066.Z04.02		1	●	048	5033038	520,00
F2330.B.066.Z06.01,5		1	●	048	5054588	570,00
F2330.B.085.Z05.02		1	●	048	5033039	623,00
F2330.B.085.Z07.01,5		1	●	048	5053910	679,00
F2330.B22.050.Z04.01,5		1	●	048	5409179	446,00
F2330.B22.063.Z05.01,5		1	●	048	5409240	545,00
F2330.T18.020.Z02.01		1	●	048	5039270	300,00
F2330.T22.025.Z03.01		1	●	048	5039271	334,00
F2330.T28.032.Z03.01,5		1	●	048	5039272	353,00
F2330.T28.035.Z03.01,5		1	●	048	5039273	353,00
F2330.T36.040.Z03.01,5		1	●	048	5039138	371,00
F2330.T36.042.Z03.01,5		1	●	048	5039136	371,00

Bezeichnung / Designation	Sorte / Grade	VE / US		Disc. Gr.	Article No.	EURO Stück / piece
F2330.UB19.051.Z05.01,5		1	●	048	5092346	467,00
F2330.UB19.064.Z05.01,5		1	●	048	5095403	545,00
F2330.UB26.064.Z04.02		1	●	048	5094263	520,00
F2330.UB26.076.Z05.02		1	●	048	5049608	623,00
F2330.UB26.076.Z06.01,5		1	●	048	5095404	651,00
F2330.UB38.102.Z06.02		1	●	048	5108805	732,00
F2330.UT18.019.Z02.01		1	●	048	5050729	300,00
F2330.UT22.026.Z03.01		1	●	048	5050730	334,00
F2330.UT28.031.Z03.01.5		1	●	048	5050731	353,00
F2330.UT36.038.Z03.01.5		1	●	048	5050732	371,00
F2330.UW15.019.Z02.01		1	●	048	5108498	314,00
F2330.UW19.026.Z03.01		1	●	048	5108499	350,00
F2330.UW26.031.Z03.01,5		1	●	048	5108530	370,00
F2330.UW31.038.Z03.01,5		1	●	048	5108531	389,00
F2330.UZ15.019.Z02.01		1	●	048	5108532	314,00
F2330.UZ19.026.Z03.01		1	●	048	5108533	350,00
F2330.UZ26.031.Z03.01,5		1	●	048	5108534	370,00
F2330.UZ31.038.Z03.01,5		1	●	048	5108535	389,00
F2330.Z20.020.Z02.01		1	●	048	5198344	314,00
F2330.Z25.025.Z03.01		1	●	048	5198348	350,00
F2330.Z32.032.Z03.01,5		1	●	048	5198365	370,00
F2334.B22.052.Z05.05		1	■	048	5088213[1]	531,00
F2334.B27.063.Z05.10		1	■	048	5054923[1]	625,00
F2334.B27.066.Z07.05		1	●	048	5054673[2]	690,00
F2334.B27.080.Z06.10		1	■	048	5054925[1]	756,00
F2334.B27.080.Z09.06		1	■	048	5054675[1]	870,00
F2334.B32.100.Z07.10		1	■	048	5054926[1]	897,00
F2334.B40.125.Z08.10		1	■	048	5088326[1]	1.049,00
F2334.B40.160.Z10.10		1	■	048	5088327[1]	1.285,00
F2334.T45.050.Z05.06		1	■	048	5194979[1]	344,00
F2334.Z25.025.Z03.04		1	●	048	5033030[2]	338,00
F2334R.B16.040.Z04.06		1	●	048	6111708	414,00
F2334R.B16.040.Z05.05		1	●	048	6111697	437,00
F2334R.B16.040.Z05.06		1	●	048	6078318	437,00
F2334R.B16.040.Z06.05		1	●	048	6111702	461,00
F2334R.B22.050.Z05.06		1	●	048	6111716	531,00
F2334R.B22.050.Z06.06		1	●	048	6111718	559,00
F2334R.B22.052.Z05.05		1	●	048	8263757	531,00
F2334R.B22.052.Z05.06		1	●	048	6111719	531,00
F2334R.B22.052.Z06.05		1	●	048	8263756	559,00
F2334R.B22.052.Z06.06		1	●	048	6111730	559,00
F2334R.B22.063.Z07.06		1	●	048	6111732	690,00
F2334R.B27.066.Z06.06		1	●	048	8263832	657,00
F2334R.B27.066.Z07.06		1	●	048	8263830	690,00
F2334R.B27.080.Z07.06		1	●	048	8263833	794,00
F2334R.B27.080.Z09.06		1	●	048	8263831	870,00
F2334R.T22.025.Z03.05		1	●	048	6111338	262,00
F2334R.T28.032.Z03.05		1	●	048	8263759	267,00
F2334R.T28.032.Z04.05		1	●	048	6078317	297,00
F2334R.T36.040.Z04.06		1	●	048	6111703	305,00
F2334R.UB13.038.Z04.06		1	●	048	6111942	414,00
F2334R.UB19.051.Z05.06		1	●	048	6111944	531,00
F2334R.UB19.051.Z06.05		1	●	048	8263758	559,00
F2334R.UB19.051.Z06.06		1	●	048	6111945	559,00
F2334R.UB26.064.Z07.06		1	●	048	6111946	690,00
F2334R.UT28.031.Z04.05		1	●	048	6111930	297,00
F2334R.UZ31.031.Z04.05		1	●	048	6111940	386,00
F2334R.Z32.032.Z04.05		1	●	048	6111361	386,00
F2338F.B.063.Z03.48		1	●	048	5001490	1.407,00
F2338F.B.080.Z05.70		1	●	048	5001497	2.522,00
F2338F.B.085.Z05.70		1	●	048	5001495	2.621,00
F2339.T14.016.Z02.11		1	●	048	5625751	279,00
F2339.T18.020.Z02.15		1	●	048	5020363	303,00
F2339.T22.025.Z02.20		1	●	048	5020736	326,00
F2339.T28.030.Z02.24		1	●	048	5020737	351,00
F2339.T28.032.Z02.25		1	●	048	5020738	351,00
F2339.T36.040.Z02.31		1	●	048	5015382	370,00
F2339.T45.050.Z02.40		1	●	048	5015383	396,00
F2339.TC08.016.Z02.11		1	●	048	7785461	275,00
F2339.TC10.020.Z02.15		1	●	048	7785462	293,00

Bezeichnung / Designation	Sorte / Grade	VE / US		Disc. Gr.	Article No.	EURO Stück / piece
F2339.TC12.025.Z02.20		1	●	048	7785463	**310,00**
F2339.TC16.030.Z02.24		1	●	048	7785464	**327,00**
F2339.TC16.032.Z02.25		1	●	048	7785465	**327,00**
F2339.UT14.015.Z02.11		1	●	048	5625698	**279,00**
F2339.UT18.019.Z02.15		1	●	048	5026701	**303,00**
F2339.UT22.026.Z02.20		1	●	048	5026702	**326,00**
F2339.UT28.031.Z02.25		1	●	048	5026703	**351,00**
F2339.UT36.038.Z02.31		1	●	048	5050717	**370,00**
F2339.UT45.051.Z02.40		1	●	048	5050718	**396,00**
F2339.UW15.015.Z02.11		1	●	048	5625720	**279,00**
F2339.UW19.019.Z02.15		1	●	048	5026680	**379,00**
F2339.UW26.026.Z02.20		1	●	048	5105414	**409,00**
F2339.W16.016.Z02.11		1	●	048	5625755	**349,00**
F2339.W20.016.Z02.24		1	●	048	5625757	**488,00**
F2339.W20.020.Z02.15		1	●	048	5001215	**379,00**
F2339.W20.020.Z02.28		1	●	048	5001230	**540,00**
F2339.W25.025.Z02.20		1	●	048	5001216	**407,00**
F2339.W25.025.Z02.32		1	●	048	5001231	**565,00**
F2339.W32.030.Z02.24		1	●	048	5001217	**436,00**
F2339.W32.030.Z02.42		1	●	048	5001232	**596,00**
F2339.W32.032.Z02.25		1	●	048	5001218	**436,00**
F2339.W32.032.Z02.43		1	●	048	5001233	**596,00**
F2339.W40.040.Z02.31		1	●	048	5001219	**467,00**
F2339.W40.040.Z02.57		1	●	048	5001234	**625,00**
F2339.Z25.020.Z02.28		1	●	048	5001226*	**593,00**
F2481-3.97		1	●	RS2	6354208	**136,00**
F2481-3.98		1	●	RS2	6354209	**136,00**
F2481-3.99		1	●	RS2	6354240	**136,00**
F2481-4		1	●	RS2	6354241	**132,00**
F2481-4.01		1	●	RS2	6354242	**136,00**
F2481-4.02		1	●	RS2	6354243	**136,00**
F2481-4.03		1	●	RS2	6354244	**136,00**
F2481-4.5		1	●	RS2	6354245	**136,00**
F2481-4.97		1	●	RS2	6354246	**136,00**
F2481-4.98		1	●	RS2	6354247	**136,00**
F2481-4.99		1	●	RS2	6354248	**136,00**
F2481-5		1	●	RS2	6354249	**132,00**
F2481-5.01		1	●	RS2	6354250	**136,00**
F2481-5.02		1	●	RS2	6354251	**136,00**
F2481-5.03		1	●	RS2	6354252	**136,00**
F2481-5.5		1	●	RS2	6354253	**136,00**
F2481-5.97		1	●	RS2	6354254	**136,00**
F2481-5.98		1	●	RS2	6354255	**136,00**
F2481-5.99		1	●	RS2	6354256	**136,00**
F2481-6		1	●	RS2	6354257	**132,00**
F2481-6.01		1	●	RS2	6354258	**148,00**
F2481-6.02		1	●	RS2	6354259	**148,00**
F2481-6.03		1	●	RS2	6354260	**148,00**
F2481-6.5		1	●	RS2	6354261	**164,00**
F2481-7		1	●	RS2	6354262	**160,00**
F2481-7.5		1	●	RS2	6354263	**164,00**
F2481-7.97		1	●	RS2	6354264	**164,00**
F2481-7.98		1	●	RS2	6354265	**164,00**
F2481-7.99		1	●	RS2	6354266	**164,00**
F2481-8		1	●	RS2	6354267	**160,00**
F2481-8.01		1	●	RS2	6354268	**192,00**
F2481-8.02		1	●	RS2	6354269	**192,00**
F2481-8.03		1	●	RS2	6354270	**192,00**
F2481-8.5		1	●	RS2	6354271	**192,00**
F2481-9		1	●	RS2	6354272	**186,00**
F2481-9.5		1	●	RS2	6354273	**192,00**
F2481-9.97		1	●	RS2	6354274	**192,00**
F2481-9.98		1	●	RS2	6354275	**192,00**
F2481-9.99		1	●	RS2	6354276	**192,00**
F2481-10		1	●	RS2	6354277	**186,00**
F2481-10.01		1	●	RS2	6354278	**240,00**
F2481-10.02		1	●	RS2	6354279	**240,00**
F2481-10.03		1	●	RS2	6354280	**240,00**
F2481-10.5		1	●	RS2	6354281	**240,00**
F2481-11		1	●	RS2	6354282	**233,00**

Bezeichnung / Designation	Sorte / Grade	VE / US		Disc. Gr.	Article No.	EURO Stück / piece
F2481-11.5		1	●	RS2	6354283	**240,00**
F2481-11.97		1	●	RS2	6354284	**240,00**
F2481-11.98		1	●	RS2	6354285	**240,00**
F2481-11.99		1	●	RS2	6354286	**240,00**
F2481-12		1	●	RS2	6354287	**233,00**
F2481-12.01		1	●	RS2	6354288	**288,00**
F2481-12.02		1	●	RS2	6354289	**288,00**
F2481-12.03		1	●	RS2	6354290	**288,00**
F2481-13		1	●	RS2	6354291	**279,00**
F2481-14		1	●	RS2	6354292	**279,00**
F2481-15		1	●	RS2	6354293	**306,00**
F2481-16		1	●	RS2	6354294	**306,00**
F2481-17		1	●	RS2	6354295	**358,00**
F2481-18		1	●	RS2	6354296	**358,00**
F2481-19		1	●	RS2	6354297	**380,00**
F2481-20		1	●	RS2	6354298	**380,00**
F2481TMS-3.97	TMS	1	●	RS2	6354360	**163,00**
F2481TMS-3.98	TMS	1	●	RS2	6354361	**163,00**
F2481TMS-3.99	TMS	1	●	RS2	6354362	**163,00**
F2481TMS-4	TMS	1	●	RS2	6354363	**158,00**
F2481TMS-4.01	TMS	1	●	RS2	6354364	**163,00**
F2481TMS-4.02	TMS	1	●	RS2	6354365	**163,00**
F2481TMS-4.03	TMS	1	●	RS2	6354366	**163,00**
F2481TMS-4.5	TMS	1	●	RS2	6354367	**163,00**
F2481TMS-4.97	TMS	1	●	RS2	6354368	**163,00**
F2481TMS-4.98	TMS	1	●	RS2	6354369	**163,00**
F2481TMS-4.99	TMS	1	●	RS2	6354370	**163,00**
F2481TMS-5	TMS	1	●	RS2	6354371	**158,00**
F2481TMS-5.01	TMS	1	●	RS2	6354372	**163,00**
F2481TMS-5.02	TMS	1	●	RS2	6354373	**163,00**
F2481TMS-5.03	TMS	1	●	RS2	6354374	**163,00**
F2481TMS-5.5	TMS	1	●	RS2	6354375	**163,00**
F2481TMS-5.97	TMS	1	●	RS2	6354376	**163,00**
F2481TMS-5.98	TMS	1	●	RS2	6354377	**163,00**
F2481TMS-5.99	TMS	1	●	RS2	6354378	**163,00**
F2481TMS-6	TMS	1	●	RS2	6354379	**158,00**
F2481TMS-6.01	TMS	1	●	RS2	6354380	**178,00**
F2481TMS-6.02	TMS	1	●	RS2	6354381	**178,00**
F2481TMS-6.03	TMS	1	●	RS2	6354382	**178,00**
F2481TMS-6.5	TMS	1	●	RS2	6354383	**197,00**
F2481TMS-7	TMS	1	●	RS2	6354384	**192,00**
F2481TMS-7.5	TMS	1	●	RS2	6354385	**197,00**
F2481TMS-7.97	TMS	1	●	RS2	6354386	**197,00**
F2481TMS-7.98	TMS	1	●	RS2	6354387	**197,00**
F2481TMS-7.99	TMS	1	●	RS2	6354388	**197,00**
F2481TMS-8	TMS	1	●	RS2	6354389	**192,00**
F2481TMS-8.01	TMS	1	●	RS2	6354390	**230,00**
F2481TMS-8.02	TMS	1	●	RS2	6354391	**230,00**
F2481TMS-8.03	TMS	1	●	RS2	6354392	**230,00**
F2481TMS-8.5	TMS	1	●	RS2	6354393	**230,00**
F2481TMS-9	TMS	1	●	RS2	6354394	**223,00**
F2481TMS-9.5	TMS	1	●	RS2	6354395	**230,00**
F2481TMS-9.97	TMS	1	●	RS2	6354396	**230,00**
F2481TMS-9.98	TMS	1	●	RS2	6354397	**230,00**
F2481TMS-9.99	TMS	1	●	RS2	6354398	**230,00**
F2481TMS-10	TMS	1	●	RS2	6354399	**223,00**
F2481TMS-10.01	TMS	1	●	RS2	6354400	**288,00**
F2481TMS-10.02	TMS	1	●	RS2	6354401	**288,00**
F2481TMS-10.03	TMS	1	●	RS2	6354402	**288,00**
F2481TMS-10.5	TMS	1	●	RS2	6354403	**288,00**
F2481TMS-11	TMS	1	●	RS2	6354404	**279,00**
F2481TMS-11.5	TMS	1	●	RS2	6354405	**288,00**
F2481TMS-11.97	TMS	1	●	RS2	6354406	**288,00**
F2481TMS-11.98	TMS	1	●	RS2	6354407	**288,00**
F2481TMS-11.99	TMS	1	●	RS2	6354408	**288,00**
F2481TMS-12	TMS	1	●	RS2	6354409	**279,00**
F2481TMS-12.01	TMS	1	●	RS2	6354410	**345,00**
F2481TMS-12.02	TMS	1	●	RS2	6354411	**345,00**
F2481TMS-12.03	TMS	1	●	RS2	6354412	**345,00**
F2481TMS-13	TMS	1	●	RS2	6354413	**335,00**

Bezeichnung / Designation	Sorte / Grade	VE / US		Disc. Gr.	Article No.	EURO Stück / piece
F2481TMS-14	TMS	1	●	RS2	6354414	335,00
F2481TMS-15	TMS	1	●	RS2	6354415	367,00
F2481TMS-16	TMS	1	●	RS2	6354416	367,00
F2481TMS-17	TMS	1	●	RS2	6354417	430,00
F2481TMS-18	TMS	1	●	RS2	6354418	430,00
F2481TMS-19	TMS	1	●	RS2	6354419	456,00
F2481TMS-20	TMS	1	●	RS2	6354420	456,00
F2482-3.97		1	●	RS2	6354299	123,00
F2482-3.98		1	●	RS2	6354300	123,00
F2482-3.99		1	●	RS2	6354301	123,00
F2482-4		1	●	RS2	6354302	120,00
F2482-4.01		1	●	RS2	6354303	123,00
F2482-4.02		1	●	RS2	6354304	123,00
F2482-4.03		1	●	RS2	6354305	123,00
F2482-4.5		1	●	RS2	6354306	123,00
F2482-4.97		1	●	RS2	6354307	123,00
F2482-4.98		1	●	RS2	6354308	123,00
F2482-4.99		1	●	RS2	6354309	123,00
F2482-5		1	●	RS2	6354310	120,00
F2482-5.01		1	●	RS2	6354311	123,00
F2482-5.02		1	●	RS2	6354312	123,00
F2482-5.03		1	●	RS2	6354313	123,00
F2482-5.5		1	●	RS2	6354314	123,00
F2482-5.97		1	●	RS2	6354315	123,00
F2482-5.98		1	●	RS2	6354316	123,00
F2482-5.99		1	●	RS2	6354317	123,00
F2482-6		1	●	RS2	6354318	120,00
F2482-6.01		1	●	RS2	6354319	135,00
F2482-6.02		1	●	RS2	6354320	135,00
F2482-6.03		1	●	RS2	6354321	135,00
F2482-6.5		1	●	RS2	6354322	149,00
F2482-7		1	●	RS2	6354323	145,00
F2482-7.5		1	●	RS2	6354324	149,00
F2482-7.97		1	●	RS2	6354325	149,00
F2482-7.98		1	●	RS2	6354326	149,00
F2482-7.99		1	●	RS2	6354327	149,00
F2482-8		1	●	RS2	6354328	145,00
F2482-8.01		1	●	RS2	6354329	174,00
F2482-8.02		1	●	RS2	6354330	174,00
F2482-8.03		1	●	RS2	6354331	174,00
F2482-8.5		1	●	RS2	6354332	174,00
F2482-9		1	●	RS2	6354333	169,00
F2482-9.5		1	●	RS2	6354334	174,00
F2482-9.97		1	●	RS2	6354335	174,00
F2482-9.98		1	●	RS2	6354336	174,00
F2482-9.99		1	●	RS2	6354337	174,00
F2482-10		1	●	RS2	6354338	169,00
F2482-10.01		1	●	RS2	6354339	218,00
F2482-10.02		1	●	RS2	6354340	218,00
F2482-10.03		1	●	RS2	6354341	218,00
F2482-10.5		1	●	RS2	6354342	218,00
F2482-11		1	●	RS2	6354343	212,00
F2482-11.5		1	●	RS2	6354344	218,00
F2482-11.97		1	●	RS2	6354345	218,00
F2482-11.98		1	●	RS2	6354346	218,00
F2482-11.99		1	●	RS2	6354347	218,00
F2482-12		1	●	RS2	6354348	212,00
F2482-12.01		1	●	RS2	6354349	262,00
F2482-12.02		1	●	RS2	6354350	262,00
F2482-12.03		1	●	RS2	6354351	262,00
F2482-13		1	●	RS2	6354352	254,00
F2482-14		1	●	RS2	6354353	254,00
F2482-15		1	●	RS2	6354354	278,00
F2482-16		1	●	RS2	6354355	278,00
F2482-17		1	●	RS2	6354356	326,00
F2482-18		1	●	RS2	6354357	326,00
F2482-19		1	●	RS2	6354358	346,00
F2482-20		1	●	RS2	6354359	346,00
F2482TMS-3.97	TMS	1	●	RS2	6354421	148,00
F2482TMS-3.98	TMS	1	●	RS2	6354422	148,00

Bezeichnung / Designation	Sorte / Grade	VE / US		Disc. Gr.	Article No.	EURO Stück / piece
F2482TMS-3.99	TMS	1	●	RS2	6354423	148,00
F2482TMS-4	TMS	1	●	RS2	6354424	144,00
F2482TMS-4.01	TMS	1	●	RS2	6354425	148,00
F2482TMS-4.02	TMS	1	●	RS2	6354426	148,00
F2482TMS-4.03	TMS	1	●	RS2	6354427	148,00
F2482TMS-4.5	TMS	1	●	RS2	6354428	148,00
F2482TMS-4.97	TMS	1	●	RS2	6354429	148,00
F2482TMS-4.98	TMS	1	●	RS2	6354430	148,00
F2482TMS-4.99	TMS	1	●	RS2	6354431	148,00
F2482TMS-5	TMS	1	●	RS2	6354432	144,00
F2482TMS-5.01	TMS	1	●	RS2	6354433	148,00
F2482TMS-5.02	TMS	1	●	RS2	6354434	148,00
F2482TMS-5.03	TMS	1	●	RS2	6354435	148,00
F2482TMS-5.5	TMS	1	●	RS2	6354436	148,00
F2482TMS-5.97	TMS	1	●	RS2	6354437	148,00
F2482TMS-5.98	TMS	1	●	RS2	6354438	148,00
F2482TMS-5.99	TMS	1	●	RS2	6354439	148,00
F2482TMS-6	TMS	1	●	RS2	6354440	144,00
F2482TMS-6.01	TMS	1	●	RS2	6354441	161,00
F2482TMS-6.02	TMS	1	●	RS2	6354442	161,00
F2482TMS-6.03	TMS	1	●	RS2	6354443	161,00
F2482TMS-6.5	TMS	1	●	RS2	6354444	179,00
F2482TMS-7	TMS	1	●	RS2	6354445	174,00
F2482TMS-7.5	TMS	1	●	RS2	6354446	179,00
F2482TMS-7.97	TMS	1	●	RS2	6354447	179,00
F2482TMS-7.98	TMS	1	●	RS2	6354448	179,00
F2482TMS-7.99	TMS	1	●	RS2	6354449	179,00
F2482TMS-8	TMS	1	●	RS2	6354450	174,00
F2482TMS-8.01	TMS	1	●	RS2	6354451	209,00
F2482TMS-8.02	TMS	1	●	RS2	6354452	209,00
F2482TMS-8.03	TMS	1	●	RS2	6354453	209,00
F2482TMS-8.5	TMS	1	●	RS2	6354454	209,00
F2482TMS-9	TMS	1	●	RS2	6354455	203,00
F2482TMS-9.5	TMS	1	●	RS2	6354456	209,00
F2482TMS-9.97	TMS	1	●	RS2	6354457	209,00
F2482TMS-9.98	TMS	1	●	RS2	6354458	209,00
F2482TMS-9.99	TMS	1	●	RS2	6354459	209,00
F2482TMS-10	TMS	1	●	RS2	6354460	203,00
F2482TMS-10.01	TMS	1	●	RS2	6354461	262,00
F2482TMS-10.02	TMS	1	●	RS2	6354462	262,00
F2482TMS-10.03	TMS	1	●	RS2	6354463	262,00
F2482TMS-10.5	TMS	1	●	RS2	6354464	262,00
F2482TMS-11	TMS	1	●	RS2	6354465	254,00
F2482TMS-11.5	TMS	1	●	RS2	6354466	262,00
F2482TMS-11.97	TMS	1	●	RS2	6354467	262,00
F2482TMS-11.98	TMS	1	●	RS2	6354468	262,00
F2482TMS-11.99	TMS	1	●	RS2	6354469	262,00
F2482TMS-12	TMS	1	●	RS2	6354470	254,00
F2482TMS-12.01	TMS	1	●	RS2	6354471	314,00
F2482TMS-12.02	TMS	1	●	RS2	6354472	314,00
F2482TMS-12.03	TMS	1	●	RS2	6354473	314,00
F2482TMS-13	TMS	1	●	RS2	6354474	305,00
F2482TMS-14	TMS	1	●	RS2	6354475	305,00
F2482TMS-15	TMS	1	●	RS2	6354476	334,00
F2482TMS-16	TMS	1	●	RS2	6354477	334,00
F2482TMS-17	TMS	1	●	RS2	6354478	391,00
F2482TMS-18	TMS	1	●	RS2	6354479	391,00
F2482TMS-19	TMS	1	●	RS2	6354480	415,00
F2482TMS-20	TMS	1	●	RS2	6354481	415,00
F3234-1		1	●	RH1	5073207	71,30
F3234-1.5		1	●	RH1	5073208	44,90
F3234-2		1	●	RH1	5073211	46,60
F3234-2.5		1	●	RH1	5073212	54,20
F3234-3		1	●	RH1	5073213	50,50
F3234-4		1	●	RH1	5073214	50,50
F3234-5		1	●	RH1	5073215	53,50
F3234-6		1	●	RH1	5073216	61,10
F3234-8		1	●	RH1	5073217	91,80
F3234-10		1	●	RH1	5073209	118,00
F3234-12		1	●	RH1	5073210	145,00

Bezeichnung / Designation	Sorte / Grade	VE / US		Disc. Gr.	Article No.	EURO Stück / piece
F4030.B22.050.Z05.01		1	●	049	5873772	529,00
F4030.B22.052.Z04.01		1	●	049	5873858	505,00
F4030.B22.063.Z05.02		1	●	049	5882900	617,00
F4030.B27.066.Z04.02		1	●	049	5882901	589,00
F4030.B27.080.Z05.02		1	●	049	5882902	705,00
F4030.B27.080.Z06.02		1	●	049	5882903	737,00
F4030.B27.085.Z05.02		1	●	049	5882905	705,00
F4030.B32.100.Z06.02		1	●	049	5882906	829,00
F4030.B32.100.Z07.02		1	●	049	5882907	865,00
F4030.T22.025.Z02.01		1	●	049	5873773	360,00
F4030.T28.032.Z03.01		1	●	049	5873873	400,00
F4030.T28.035.Z03.01		1	●	049	5873874	400,00
F4030.T36.040.Z04.01		1	●	049	5873876	442,00
F4030.T45.050.Z04.02		1	●	049	5882898	530,00
F4030.UB19.051.Z05.01		1	●	049	5873918	529,00
F4030.UB26.064.Z05.02		1	●	049	5882952	617,00
F4030.UB26.076.Z05.02		1	●	049	5882954	705,00
F4030.UB26.076.Z06.02		1	●	049	5882956	737,00
F4030.UB38.102.Z06.02		1	●	049	5882957	829,00
F4030.UB38.102.Z07.02		1	●	049	5882958	865,00
F4030.UT22.026.Z02.01		1	●	049	5873879	360,00
F4030.UT28.031.Z03.01		1	●	049	5873910	400,00
F4030.UT36.038.Z03.01		1	●	049	5873911	421,00
F4030.UT45.051.Z04.02		1	●	049	5882947	530,00
F4030.UW26.031.Z03.01		1	●	049	5873913	400,00
F4030.UZ19.026.Z02.01		1	●	049	5873915	360,00
F4030.UZ26.031.Z03.01		1	●	049	5873916	400,00
F4030.UZ31.038.Z03.01		1	●	049	5873917	421,00
F4030.Z25.025.Z02.01		1	●	049	5894508	360,00
F4030.Z32.032.Z03.01		1	●	049	5894550	400,00
F4033.B27.080.Z06.09		1	●	049	5535532	737,00
F4033.B32.100.Z07.09		1	●	049	5535534	865,00
F4033.B40.125.Z08.09		1	●	049	5535538	1.002,00
F4038.T22.025.Z02.22		1	●	049	5159798	757,00
F4038.T28.032.Z03.30		1	●	049	5159799	1.070,00
F4038.UW19.019.Z01.30		1	●	049	5335539	627,00
F4038.UW26.026.Z02.37		1	●	049	5335550	940,00
F4038.W20.020.Z01.30		1	●	049	5159792	627,00
F4038.W25.025.Z02.30		1	●	049	5364314	847,00
F4038.W32.032.Z03.37		1	●	049	5159793	1.208,00
F4041.B16.040.Z03.13		1	●	049	6411125	382,00
F4041.B22.050.Z03.13		1	●	049	6411200	458,00
F4041.B22.050.Z04.13		1	●	049	5045316	481,00
F4041.B22.063.Z04.13		1	●	049	6411202	561,00
F4041.B22.063.Z06.13		1	●	049	6411204	614,00
F4041.B27.063.Z04.13		1	■	049	5055654*	561,00
F4041.B27.063.Z06.13		1	●	049	5055655	614,00
F4041.B27.080.Z05.13		1	●	049	6411205	672,00
F4041.B27.080.Z07.13		1	●	049	6411206	733,00
F4041.B32.100.Z05.13		1	●	049	6411207	756,00
F4041.B32.100.Z08.13		1	●	049	6411208	859,00
F4041.B40.125.Z07.13		1	●	049	6411220	916,00
F4041.B40.125.Z10.13		1	●	049	6411221	992,00
F4041.T36.040.Z03.13		1	●	049	5044324	401,00
F4041.UB19.051.Z04.13		1	●	049	7061889	481,00
F4041.UB26.064.Z06.13		1	●	049	7061891	614,00
F4041.UB26.076.Z07.13		1	●	049	7061893	733,00
F4041.UB38.102.Z08.13		1	●	049	5537905	859,00
F4041.UT36.038.Z03.13		1	●	049	5051618	401,00
F4041.W32.040.Z03.13		1	●	049	5108859	401,00
F4042.B16.040.Z03.11		1	●	049	6077972	401,00
F4042.B16.040.Z03.15		1	●	049	6078054	401,00
F4042.B16.040.Z04.08		1	●	049	5402944	421,00
F4042.B16.040.Z04.11		1	●	049	5402980	421,00
F4042.B16.040.Z04.15		1	●	049	6078056	421,00
F4042.B16.040.Z05.11		1	●	049	6043068	441,00
F4042.B16.040.Z06.08		1	●	049	6077888	461,00
F4042.B22.050.Z03.15		1	●	049	6078057	481,00
F4042.B22.050.Z04.11		1	●	049	6077976	505,00
F4042.B22.050.Z05.08		1	●	049	5402947	529,00

Bezeichnung / Designation	Sorte / Grade	VE / US		Disc. Gr.	Article No.	EURO Stück / piece
F4042.B22.050.Z05.15		1	●	049	6078058	529,00
F4042.B22.050.Z06.11		1	●	049	6077978	553,00
F4042.B22.050.Z07.08		1	●	049	6077955	577,00
F4042.B22.063.Z04.15		1	●	049	6078059	589,00
F4042.B22.063.Z05.11		1	●	049	6078023	617,00
F4042.B22.063.Z06.15		1	●	049	6043969	645,00
F4042.B22.063.Z07.11		1	●	049	6078025	673,00
F4042.B27.063.Z05.11		1	●	049	5053359	617,00
F4042.B27.063.Z05.16		1	●	049	5100373	617,00
F4042.B27.063.Z06.15		1	●	049	5053362	645,00
F4042.B27.063.Z07.11		1	●	049	5053360	673,00
F4042.B27.080.Z05.15		1	●	049	6078131	705,00
F4042.B27.080.Z05.16		1	●	049	5403055	705,00
F4042.B27.080.Z06.11		1	●	049	6078050	737,00
F4042.B27.080.Z06.16		1	●	049	5100374	737,00
F4042.B27.080.Z07.15		1	●	049	6078132	769,00
F4042.B27.080.Z08.11		1	●	049	6078051	801,00
F4042.B32.100.Z05.15		1	●	049	6218882	793,00
F4042.B32.100.Z07.16		1	●	049	5100375	865,00
F4042.B32.100.Z08.15		1	●	049	6218885	902,00
F4042.B40.125.Z07.15		1	●	049	6218886	962,00
F4042.B40.125.Z08.16		1	●	049	5100376	1.002,00
F4042.B40.125.Z10.15		1	●	049	6049049	1.042,00
F4042.B40.160.Z08.15		1	■	049	6218887*	1.202,00
F4042.B40.160.Z10.16		1	●	049	5100377	1.250,00
F4042.B40.160.Z12.15		1	●	049	6218901	1.298,00
F4042.T14.016.Z02.08		1	●	049	5045281	320,00
F4042.T18.020.Z03.08		1	●	049	5045283	358,00
F4042.T22.025.Z03.11		1	●	049	5044099	379,00
F4042.T22.025.Z04.08		1	●	049	5045285	398,00
F4042.T28.032.Z03.11		1	●	049	5044187	400,00
F4042.T28.032.Z03.15		1	●	049	6262643	400,00
F4042.T28.032.Z04.08		1	■	049	5045286*	420,00
F4042.T28.032.Z04.11		1	●	049	5044048	420,00
F4042.T28.032.Z05.08		1	●	049	5045287	440,00
F4042.T36.040.Z03.15		1	●	049	5045270	421,00
F4042.T36.040.Z04.15		1	●	049	5045269	442,00
F4042.T36.040.Z05.11		1	●	049	5044177	463,00
F4042.T45.050.Z05.15		1	●	049	5044103	555,00
F4042.UB13.038.Z05.11		1	●	049	7061861	441,00
F4042.UB19.051.Z05.15		1	●	049	7061871	529,00
F4042.UB19.051.Z06.11		1	●	049	7061863	553,00
F4042.UB26.064.Z06.15		1	●	049	7061873	645,00
F4042.UB26.076.Z05.15		1	●	049	7061874	705,00
F4042.UB26.076.Z07.15		1	●	049	7061875	769,00
F4042.UB26.076.Z08.11		1	●	049	7061867	801,00
F4042.UB38.102.Z08.15		1	■	049	5537907*	902,00
F4042.UT22.026.Z03.11		1	●	049	5051594	379,00
F4042.UT28.031.Z03.11		1	●	049	5051595	400,00
F4042.UT28.031.Z04.11		1	●	049	5051596	420,00
F4042.UT36.038.Z03.15		1	●	049	5051601	421,00
F4042.UT45.051.Z06.11		1	●	049	5051600	581,00
F4042.UW15.013.Z01.08		1	■	049	5051566*	284,00
F4042.UW19.019.Z02.11		1	●	049	5205206	340,00
F4042.UW26.026.Z02.15		1	●	049	5205207	360,00
F4042.UW26.026.Z03.11		1	●	049	5051588	379,00
F4042.UW31.031.Z03.15		1	●	049	5205208	400,00
F4042.UW31.031.Z04.11		1	●	049	5051589	420,00
F4042.UZ15.013.Z01.08		1	■	049	5051572*	284,00
F4042.UZ19.019.Z02.11		1	●	049	5205210	340,00
F4042.UZ26.026.Z02.15		1	●	049	5205212	360,00
F4042.UZ26.026.Z03.08		1	■	049	5051575*	379,00
F4042.UZ26.026.Z03.11		1	●	049	5051591	379,00
F4042.UZ31.031.Z03.15		1	●	049	5205213	400,00
F4042.W16.010.Z01.08		1	●	049	5045288	265,00
F4042.W16.012.Z01.08		1	●	049	5045289	284,00
F4042.W16.016.Z02.08		1	●	049	5045290	320,00
F4042.W20.020.Z02.08		1	●	049	5402907	340,00
F4042.W20.020.Z03.08		1	●	049	5045291	358,00
F4042.W25.025.Z02.15		1	●	049	6262645	360,00

Bezeichnung / Designation	Sorte / Grade	VE / US		Disc. Gr.	Article No.	EURO Stück / piece
F4042.W25.025.Z03.11		1	●	049	5045271	379,00
F4042.W25.025.Z04.08		1	●	049	5045292	398,00
F4042.W32.032.Z03.11		1	●	049	5402988	400,00
F4042.W32.032.Z03.15		1	●	049	6262647	400,00
F4042.W32.032.Z04.11		1	●	049	5044180	420,00
F4042.W32.032.Z05.08		1	●	049	5045293	440,00
F4042.W32.040.Z05.11		1	●	049	5045272	463,00
F4042.Z16.010.Z01.08		1	■	049	5045295[1]	265,00
F4042.Z16.012.Z01.08		1	■	049	5045296[1]	284,00
F4042.Z16.016.Z02.08		1	●	049	5045297	320,00
F4042.Z16.018.Z02.08		1	●	049	5409226	320,00
F4042.Z20.020.Z02.08		1	●	049	5045298	340,00
F4042.Z20.020.Z03.08		1	●	049	5402902	358,00
F4042.Z20.022.Z02.11		1	●	049	5409250	340,00
F4042.Z25.025.Z02.11		1	●	049	5403021	360,00
F4042.Z25.025.Z02.15		1	●	049	6262731	360,00
F4042.Z25.025.Z03.08		1	■	049	5045299[1]	379,00
F4042.Z25.025.Z03.11		1	●	049	5045273	379,00
F4042.Z32.032.Z03.11		1	●	049	5403023	400,00
F4042.Z32.032.Z03.15		1	●	049	6262798	400,00
F4042.Z32.032.Z04.11		1	●	049	5045274	420,00
F4042.Z32.040.Z05.11		1	●	049	5044100	463,00
F4042R.B16.040.Z05.10		1	●	049	5532022	441,00
F4042R.B16.040.Z06.10		1	●	049	5532023	461,00
F4042R.B22.050.Z05.10		1	●	049	5532024	529,00
F4042R.B22.050.Z06.10		1	●	049	5532025	553,00
F4042R.B22.050.Z07.10		1	●	049	5532026	577,00
F4042R.B22.063.Z06.10		1	●	049	5636895	645,00
F4042R.B22.063.Z07.10		1	●	049	5636922	673,00
F4042R.T14.016.Z02.10		1	●	049	5532006	320,00
F4042R.T18.020.Z03.10		1	●	049	5532008	358,00
F4042R.T22.025.Z03.10		1	●	049	5532010	379,00
F4042R.T28.032.Z04.10		1	●	049	5532013	420,00
F4042R.T28.032.Z05.10		1	●	049	5532014	440,00
F4042R.UB19.051.Z05.10		1	●	049	5535437	529,00
F4042R.UT18.019.Z03.10		1	●	049	5535421	358,00
F4042R.UW15.015.Z02.10		1	●	049	5530008	320,00
F4042R.UW19.019.Z03.10		1	●	049	5530090	358,00
F4042R.UW26.026.Z03.10		1	●	049	5530092	379,00
F4042R.UZ15.015.Z02.10		1	●	049	5530100	320,00
F4042R.UZ19.019.Z03.10		1	●	049	5530102	358,00
F4042R.W16.016.Z02.10		1	●	049	5528974	320,00
F4042R.W20.020.Z02.10		1	●	049	5528975	340,00
F4042R.W20.020.Z03.10		1	●	049	5528976	358,00
F4042R.W25.025.Z03.10		1	●	049	5528978	379,00
F4042R.W25.025.Z04.10		1	●	049	5528979	398,00
F4042R.W32.032.Z04.10		1	●	049	5529041	420,00
F4042R.W32.032.Z05.10		1	●	049	5529043	440,00
F4042R.Z16.016.Z02.10		1	●	049	5529044	320,00
F4042R.Z20.020.Z02.10		1	●	049	5529045	340,00
F4042R.Z20.020.Z03.10		1	●	049	5529046	358,00
F4042R.Z25.025.Z03.10		1	●	049	5529048	379,00
F4042R.Z32.032.Z03.10		1	●	049	5529049	400,00
F4042R.Z32.032.Z04.10		1	●	049	5529060	420,00
F4045.B27.063.Z09.04		1	●	049	5784183	1.056,00
F4045.B27.080.Z11.04		1	●	049	5835212	1.254,00
F4045.B32.100.Z12.06		1	●	049	5873944	1.437,00
F4045.B32.100.Z14.04		1	●	049	5680348	1.490,00
F4045.B40.125.Z16.06		1	●	049	5873945	1.715,00
F4045.B40.125.Z18.04		1	●	049	5835213	1.774,00
F4045.B40.160.Z20.06		1	●	049	5873946	2.200,00
F4047.B22.050.Z04.08		1	■	049	5168972[1]	525,00
F4047.B22.063.Z06.08		1	●	049	5118900[1]	645,00
F4047.B22.063.Z07.08		1	■	049	5403048[1]	673,00
F4047.B27.063.Z06.08		1	●	049	5106010[1]	645,00
F4047.B27.063.Z07.08		1	■	049	5403080[1]	673,00
F4047.B27.080.Z07.08		1	■	049	5168973[1]	824,00
F4047.B27.080.Z09.08		1	■	049	5106011[1]	817,00
F4047.B32.100.Z08.08		1	■	049	5168974[1]	975,00
F4047.B32.100.Z11.08		1	■	049	5111648[1]	956,00

Bezeichnung / Designation	Sorte / Grade	VE / US		Disc. Gr.	Article No.	EURO Stück / piece
F4047.B40.125.Z10.08		1	■	049	5168975[1]	1.147,00
F4047.B40.125.Z14.08		1	■	049	5111649[1]	1.122,00
F4047.B40.160.Z18.08		1	■	049	5106012[1]	1.442,00
F4048.T36.040.Z03.10		1	●	049	5197542[2]	421,00
F4048.UB26.076.Z07.10		1	■	049	5523468[1]	769,00
F4053.B27.080.Z04.04		1	●	049	5301352	905,00
F4053.B32.100.Z05.04		1	●	049	5301353	1.081,00
F4053.B40.125.Z06.04		1	●	049	5301354	1.285,00
F4053.B40.160.Z08.04		1	●	049	5301355	1.698,00
F4053.BN22.080.Z04.04R		1	●	049	5531615	1.007,00
F4053.BN27.100.Z05.04R		1	●	049	5554814	1.214,00
F4053.BN32.125.Z06.04R		1	●	049	5554815	1.442,00
F4053.BN40.160.Z08.04R		1	●	049	5554817	1.905,00
F4080.B40.125.Z06.04		1	■	049	5159883[1]	891,00
F4080.B40.125.Z07.03		1	■	049	5402990[1]	930,00
F4080.B40.125DC.Z10.03		1	■	049	5402992[1]	1.007,00
F4080.B40.160.Z07.04		1	■	049	5159886[1]	1.115,00
F4080.UB26.076.Z07.03		1	■	049	5639366[1]	744,00
F4080.UB26.076DC.Z06.04		1	■	049	5329331[1]	757,00
F4080.UB38.102DC.Z07.04		1	■	049	5329334[1]	883,00
F4138.B16.040.Z03.33		1	●	049	5159805	871,00
F4138.B16.040.Z03.43		1	●	049	5625926	992,00
F4138.B22.050.Z04.43		1	●	049	5159806	1.232,00
F4138.B22.050.Z04.54		1	●	049	5625927	1.391,00
F4138.B27.063.Z05.43		1	●	049	5084988	1.568,00
F4138.N6.040.Z03.54		1	●	049	5159804	1.445,00
F4138.T28.032.Z02.33		1	●	049	5159800	695,00
F4138.T36.040.Z03.33		1	●	049	5159801	871,00
F4138.UB19.051.Z04.43		1	●	049	5335585	1.232,00
F4138.UT28.031.Z02.33		1	●	049	5335556	695,00
F4138.UT36.038.Z03.33		1	●	049	5335581	871,00
F4138.UW31.031.Z02.43		1	●	049	5335582	787,00
F4138.W32.032.Z02.43		1	●	049	5159794	787,00
F4138.W40.040.Z03.54		1	●	049	5084882	1.148,00
F4153.B27.080.Z04.06		1	●	049	5325248	923,00
F4153.B27.080.Z04.08		1	●	049	5325249	923,00
F4153.B27.080.Z04.10		1	●	049	5325400	923,00
F4153.B32.100.Z05.06		1	●	049	5325406	1.103,00
F4153.B32.100.Z05.08		1	●	049	5325460	1.103,00
F4153.B32.100.Z05.10		1	●	049	5325464	1.103,00
F4153.B40.125.Z06.06		1	●	049	5325407	1.311,00
F4153.B40.125.Z06.08		1	●	049	5325461	1.311,00
F4153.B40.125.Z06.10		1	●	049	5325465	1.311,00
F4153.B40.160.Z07.10		1	●	049	5325466	1.666,00
F4153.B40.160.Z08.06		1	●	049	5325408	1.732,00
F4153.B40.160.Z08.08		1	●	049	5325462	1.732,00
F4153.B50.200.Z08.10		1	●	049	5325467	1.905,00
F4153.B50.200.Z09.06		1	●	049	5325409	1.979,00
F4153.B50.200.Z09.08		1	●	049	5325463	1.979,00
F4153.BN22.080.Z04.06R		1	●	049	5554760	1.007,00
F4153.BN22.080.Z04.08R		1	●	049	5554765	1.016,00
F4153.BN22.080.Z04.10R		1	●	049	5526399	1.016,00
F4153.BN27.100.Z05.06R		1	●	049	5554762	1.214,00
F4153.BN27.100.Z05.08R		1	●	049	5554766	1.214,00
F4153.BN27.100.Z05.10R		1	●	049	5554769	1.214,00
F4153.BN32.125.Z06.06R		1	●	049	5554763	1.442,00
F4153.BN32.125.Z06.08R		1	●	049	5526398	1.442,00
F4153.BN32.125.Z06.10R		1	●	049	5554810	1.442,00
F4153.BN40.160.Z07.10R		1	●	049	5554811	1.832,00
F4153.BN40.160.Z08.06R		1	●	049	5554764	1.905,00
F4153.BN40.160.Z08.08R		1	●	049	5554767	1.905,00
F4153.BN40.200.Z08.10R		1	●	049	5554812	2.096,00
F4153.BN40.200.Z09.06R		1	●	049	5526397	2.177,00
F4153.BN40.200.Z09.08R		1	●	049	5554768	2.177,00
F4153.UBN19.076.Z04.06R		1	●	049	5677473	1.098,00
F4153.UBN19.076.Z04.08R		1	●	049	5677479	1.098,00
F4153.UBN19.076.Z04.10R		1	●	049	5677495	1.099,00
F4153.UBN26.102.Z05.06R		1	●	049	5677474	1.266,00
F4153.UBN26.102.Z05.08R		1	●	049	5677490	1.266,00
F4153.UBN38.152.Z08.06R		1	●	049	5677476	1.748,00

Bezeichnung / Designation	Sorte / Grade	VE / US		Disc. Gr.	Article No.	EURO Stück / piece
F4238.B22.050.Z03.43		1	●	049	5110009	907,00
F4238.B27.063.Z04.43		1	●	049	5084990	1.198,00
F4238.B27.063.Z04.57		1	●	049	5625873	1.383,00
F4238.B32.080.Z05.57		1	●	049	5098825	1.720,00
F4238.B32.080.Z05.71		1	●	049	5625879	1.951,00
F4238.N6.040.Z03.57		1	●	049	5625818	1.361,00
F4238.N8.040.Z03.57		1	●	049	5084986	1.360,00
F4238.N8.050.Z03.71		1	●	049	5625870	1.651,00
F4238.N8.063.Z04.85		1	●	049	5625871	2.220,00
F4238.N8.080.Z05.99		1	●	049	5625872	2.879,00
F4238.T36.040.Z03.29		1	●	049	5084980	616,00
F4238.T45.050.Z03.43		1	●	049	5110006	907,00
F4238.UB19.051.Z03.43		1	●	049	5197298	907,00
F4238.UB26.064.Z04.57		1	●	049	5197332	1.383,00
F4238.UB31.076.Z05.71		1	●	049	5197333	1.950,00
F4238.US5.051.Z03.85		1	●	049	5197294	1.492,00
F4238.US5.064.Z04.99		1	●	049	5197295	2.105,00
F4238.UW31.038.Z03.57		1	●	049	5197296	892,00
F4238.UW38.051.Z03.90		1	●	049	5197297	1.322,00
F4253.B32.100.Z05.12		1	●	049	5535795	1.103,00
F4253.B32.100.Z05.14		1	●	049	5535815	1.114,00
F4253.B40.125.Z05.16		1	●	049	5535827	1.282,00
F4253.B40.125.Z06.12		1	●	049	5535799	1.311,00
F4253.B40.125.Z06.14		1	●	049	5535817	1.324,00
F4253.B40.160.Z06.16		1	●	049	5535829	1.631,00
F4253.B40.160.Z06.20		1	●	049	5535849	1.663,00
F4253.B40.160.Z06.25		1	●	049	5554846	1.703,00
F4253.B40.160.Z07.12		1	●	049	5535801	1.666,00
F4253.B40.160.Z07.14		1	●	049	5535818	1.682,00
F4253.B50.200.Z07.16		1	●	049	5535841	1.869,00
F4253.B50.200.Z07.20		1	●	049	5535851	1.905,00
F4253.B50.200.Z07.25		1	●	049	5554845	1.951,00
F4253.B50.200.Z08.12		1	●	049	5535804	1.905,00
F4253.B50.200.Z08.14		1	●	049	5535820	1.925,00
F4253.B60.250.Z08.20		1	●	049	5535852	2.252,00
F4253.B60.250.Z08.25		1	●	049	5554843	2.306,00
F4253.B60.315.Z10.25		1	●	049	5532477	2.881,00
F4253.BN27.100.Z05.12R		1	●	049	5325404	1.214,00
F4253.BN27.100.Z05.14R		1	●	049	5325545	1.214,00
F4253.BN32.125.Z05.16R		1	●	049	5325560	1.382,00
F4253.BN32.125.Z06.12R		1	●	049	5325540	1.442,00
F4253.BN32.125.Z06.14R		1	●	049	5325546	1.442,00
F4253.BN40.160.Z06.16R		1	●	049	5325561	1.759,00
F4253.BN40.160.Z06.20R		1	●	049	5325563	1.759,00
F4253.BN40.160.Z06.25R		1	●	049	5554847	1.759,00
F4253.BN40.160.Z07.12R		1	●	049	5325541	1.832,00
F4253.BN40.160.Z07.14R		1	●	049	5325547	1.832,00
F4253.BN40.200.Z07.16R		1	●	049	5325562	2.015,00
F4253.BN40.200.Z07.20R		1	●	049	5325564	2.015,00
F4253.BN40.200.Z07.25R		1	●	049	5554848	2.015,00
F4253.BN40.200.Z08.12R		1	●	049	5325543	2.096,00
F4253.BN40.200.Z08.14R		1	●	049	5325549	2.096,00
F4253.BN60.250.Z08.20R		1	●	049	5325402	2.382,00
F4253.BN60.250.Z08.25R		1	●	049	5554849	2.382,00
F4253.BN60.315.Z10.25R		1	●	049	5554880	2.975,00
F4253.UBN26.102.Z05.13R		1	●	049	5522233[1]	1.214,00
F4338.B27.063.Z04.47		1	●	049	5677414	1.198,00
F4338.B27.063.Z04.63		1	●	049	5677415	1.383,00
F4338.B32.080.Z05.78		1	●	049	5677419	1.950,00
F5038.T28.032.Z02.32		1	●	049	6515171	894,00
F5038.W25.025.Z02.32		1	●	049	6515208	887,00
F5038.W32.032.Z02.40		1	●	049	6515234	974,00
F5038.W40.040.Z03.40		1	●	049	6515236	1.143,00
F5041.B16.040.Z04.08		1	●	049	6195341	421,00
F5041.B16.040.Z06.08		1	●	049	6195342	461,00
F5041.B22.050.Z05.08		1	●	049	6195344	529,00
F5041.B22.050.Z07.08		1	●	049	6195346	577,00
F5041.B22.063.Z07.08		1	●	049	6195347	673,00
F5041.B22.063.Z10.08		1	●	049	6189808	729,00
F5041.T22.025.Z03.08		1	●	049	6190498	379,00

Bezeichnung / Designation	Sorte / Grade	VE / US		Disc. Gr.	Article No.	EURO Stück / piece
F5041.T22.025.Z04.08		1	●	049	6196999	398,00
F5041.T28.032.Z04.08		1	●	049	6197010	420,00
F5041.T28.032.Z05.08		1	●	049	6197011	440,00
F5041.UB19.051.Z05.08		1	●	049	6196061	529,00
F5041.UW26.026.Z03.08		1	●	049	6197408	379,00
F5041.UW31.031.Z04.08		1	●	049	6197421	420,00
F5041.UZ26.026.Z03.08		1	●	049	6197426	379,00
F5041.W25.025.Z03.08		1	●	049	6197044	379,00
F5041.W25.025.Z04.08		1	●	049	6197296	398,00
F5041.W32.032.Z04.08		1	●	049	6197298	420,00
F5041.W32.032.Z05.08		1	●	049	6197372	440,00
F5041.W32.040.Z06.08		1	■	049	6197374[2]	484,00
F5041.Z25.025.Z03.08		1	●	049	6197401	379,00
F5041.Z25.025.Z04.08		1	●	049	6197402	398,00
F5041.Z32.032.Z04.08		1	●	049	6197403	420,00
F5041.Z32.032.Z05.08		1	●	049	6197404	440,00
F5055.B16.063.Z04.3,0		1	●	049	6421990	531,00
F5055.B16.063.Z04.4,0		1	●	049	6421993	531,00
F5055.B16.063.Z05.1,5		1	●	049	6421800	593,00
F5055.B16.063.Z05.2,0		1	●	049	6406425	593,00
F5055.B16.080.Z06.3,0		1	●	049	6421999	668,00
F5055.B16.080.Z06.4,0		1	●	049	6422000	668,00
F5055.B16.080.Z07.1,5		1	●	049	6421995	726,00
F5055.B16.080.Z07.2,0		1	●	049	6412678	726,00
F5055.B22.100.Z09.1,5		1	●	049	6422002	883,00
F5055.B22.100.Z09.2,0		1	●	049	6422003	883,00
F5055.B22.100.Z09.3,0		1	●	049	6422005	883,00
F5055.B22.100.Z09.4,0		1	●	049	6422006	883,00
F5055.B32.125.Z11.1,5		1	●	049	6422008	1.014,00
F5055.B32.125.Z11.2,0		1	●	049	6406427	1.014,00
F5055.B32.125.Z11.3,0		1	●	049	6422021	1.014,00
F5055.B32.125.Z11.4,0		1	●	049	6422022	1.014,00
F5055.B40.160.Z14.2,0		1	●	049	6422023	1.226,00
F5055.B40.160.Z14.3,0		1	●	049	6422027	1.226,00
F5055.B40.160.Z14.4,0		1	●	049	6422028	1.226,00
F5055.B40.200.Z19.3,0		1	●	049	6422029	1.463,00
F5055.B40.200.Z19.4,0		1	●	049	6422031	1.463,00
F5055.B40.250.Z24.3,0		1	●	049	6406426	1.713,00
F5055.B40.250.Z24.4,0		1	●	049	6422032	1.713,00
F5055.BN16.063.Z04.3,0R		1	●	049	6682467	931,00
F5055.BN16.063.Z04.4,0R		1	●	049	6682468	931,00
F5055.BN16.080.Z06.3,0R		1	●	049	6682469	1.059,00
F5055.BN16.080.Z06.4,0R		1	●	049	6682470	1.059,00
F5055.BN22.100.Z09.3,0R		1	●	049	6682471	1.270,00
F5055.BN22.100.Z09.4,0R		1	●	049	6682472	1.270,00
F5055.BN32.125.Z11.3,0R		1	●	049	6682473	1.405,00
F5055.BN32.125.Z11.4,0R		1	●	049	6682474	1.405,00
F5055.BN40.160.Z14.3,0R		1	●	049	6682475	1.640,00
F5055.BN40.160.Z14.4,0R		1	●	049	6682476	1.640,00
F5055.UBN22.100.Z09.3,0R		1	■	049	7354033[2]	1.270,00
F5055.UBN22.100.Z09.4,0R		1	■	049	7354034[2]	1.270,00
F5055.UBN32.125.Z11.3,0R		1	■	049	7354035[2]	1.405,00
F5055.UBN32.125.Z11.4,0R		1	■	049	7354036[2]	1.405,00
F5055.UBN40.160.Z14.3,0R		1	■	049	7354037[2]	1.640,00
F5055.UBN40.160.Z14.4,0R		1	■	049	7354038[2]	1.640,00
F5055R.B50.500.Z40.5,0		1	●	049	8293004	3.317,00
F5138.B22.050.Z03.34		1	●	049	6197560	884,00
F5138.B22.050.Z03.45		1	●	049	6364969	918,00
F5138.B27.063.Z04.45		1	●	049	6195820	1.150,00
F5138.B27.063.Z04.56		1	●	049	6365030	1.229,00
F5138.B32.080.Z05.56		1	●	049	6340753	1.541,00
F5138.T36.040.Z02.34		1	●	049	6340752	684,00
F5138.UB19.051.Z03.34		1	●	049	6365039	884,00
F5138.UB26.064.Z04.45		1	●	049	6365080	1.150,00
F5138.UW38.038.Z02.45		1	●	049	6365036	779,00
F5141.B16.040.Z04.12		1	●	049	6195348	421,00
F5141.B16.040.Z05.12		1	●	049	6195333	441,00
F5141.B22.050.Z05.12		1	●	049	6195334	529,00
F5141.B22.050.Z06.12		1	●	049	6195335	553,00
F5141.B22.063.Z06.12		1	●	049	6195336	645,00

Bezeichnung / Designation	Sorte / Grade	VE / US		Disc. Gr.	Article No.	EURO Stück / piece
F5141.B22.063.Z08.12		1	●	049	6195337	701,00
F5141.B27.080.Z07.12		1	●	049	6195338	769,00
F5141.B27.080.Z10.12		1	●	049	6195019	833,00
F5141.B32.100.Z09.12		1	●	049	6229459	920,00
F5141.B32.100.Z13.12		1	●	049	6229470	992,00
F5141.B40.125.Z11.12		1	●	049	6229471	1.062,00
F5141.B40.125.Z16.12		1	●	049	6229472	1.162,00
F5141.B40.160.Z13.12		1	●	049	6592038	1.322,00
F5141.T36.040.Z05.12		1	●	049	6197016	463,00
F5141.T45.050.Z06.12		1	●	049	6197018	581,00
F5141.UB19.051.Z05.12		1	●	049	6195919	529,00
F5141.UB26.064.Z06.12		1	●	049	6196165	645,00
F5141.UB26.076.Z07.12		1	●	049	6196185	769,00
F5141.UB31.102.Z09.12		1	●	049	6229456	920,00
F5141.UB38.102.Z09.12		1	●	049	6865138	920,00
F5141.UB38.127.Z11.12		1	●	049	6229458	1.062,00
F5141.UB38.152.Z13.12		1	●	049	6592070	1.322,00
F5141.UT36.038.Z04.12		1	●	049	6197405	442,00
F5141.UW38.038.Z04.12		1	●	049	6197424	442,00
F5141.W32.040.Z03.12		1	●	049	6197375	421,00
F5141.W32.040.Z05.12		1	●	049	6197378	463,00
F5141.Z32.040.Z03.12		1	●	049	6195018	421,00
F5241.B22.050.Z05.15		1	●	049	6316556	529,00
F5241.B22.063.Z06.15		1	●	049	6316621	645,00
F5241.B27.080.Z07.15		1	●	049	6316624	769,00
F5241.B32.100.Z08.15		1	●	049	6316626	902,00
F5241.B40.125.Z10.15		1	●	049	6316804	1.042,00
F5241.B40.160.Z12.15		1	●	049	6316865	1.298,00
FK279		1	●	095	5006570	49,30
FK281		1	●	095	5006495	49,30
FK303		1	●	095	5008484	33,80
FK304		1	●	095	5008485	34,60
FK307		1	●	095	5006528	36,60
FK308		1	●	095	5006529	36,60
FK309		1	●	095	5006530	36,60
FK311		1	●	095	5006423	23,29
FK312		1	●	095	5006424	23,29
FK313		1	●	095	5006425	23,29
FK324		1	●	095	5006526	45,50
FK358		1	●	095	5006533	32,20
FK359		1	●	095	5006534	32,20
FK360		1	●	095	5006535	32,20
FK361		1	●	095	5006543	25,40
FK364		1	●	095	5006546	25,40
FK369		1	●	095	5017301	27,80
FK371		10	●	095	5055789	18,98
FK372		10	●	095	5055790	18,98
FK373		1	●	095	5055791	3,08
FK374		1	●	095	5678556	18,98
FK375		1	●	095	5873363	28,30
FK377		1	●	095	6201147	18,98
FK378		1	●	095	6299395	57,90
FK379		1	●	095	6365486	18,98
FK380		10	●	095	6385824	19,78
FK383		1	●	095	6730817	73,40
FK384		1	●	095	6730818	73,40
FK390		1	●	095	6739247	35,50
FK392		1	●	095	6788076	81,10
FK393		1	●	095	6788077	81,10
FK394		1	●	095	7673632	23,66
FK398		1	●	095	8261794	104,00
FL643		1	●	095	5008113	143,00
FL646		1	●	095	5008119	143,00
FL658		1	●	095	5008244	143,00
FL671		1	●	095	5007894	192,00
FL672		1	●	095	5007895	192,00
FL673		1	●	095	5007896	192,00
FL684		1	●	095	5006638	57,90
FL685		1	●	095	5006640	57,90
FL686		1	●	095	5006642	57,90

Bezeichnung / Designation	Sorte / Grade	VE / US		Disc. Gr.	Article No.	EURO Stück / piece
FL695		1	●	095	5006660	74,20
FL696		1	●	095	5006661	74,20
FL704		1	●	095	5016151	192,00
FL707		1	●	095	5016156	192,00
FL709		1	●	052	5008344	503,00
FL710		1	●	052	5008346	503,00
FL711		1	●	052	5008348	503,00
FL717		1	●	052	5041694	503,00
FL724		1	●	095	5160141	57,90
FL725		1	●	095	5160143	57,90
FL726		1	●	095	5160145	57,90
FR436		1	●	095	5006662	161,00
FR437		1	●	095	5006663	161,00
FR441M		1	●	095	5006598	116,00
FR445M		1	●	095	5006557	116,00
FR447M		1	●	095	5006623	116,00
FR448M		1	●	095	5006559	137,00
FR451M		1	●	095	5006599	116,00
FR455M		1	●	095	5006885	116,00
FR495M		1	●	095	5006888	116,00
FR500M		1	●	095	5006612	116,00
FR592M		1	●	095	5006625	116,00
FR594		1	●	095	5006630	121,00
FR595		1	●	095	5006631	121,00
FR596		1	●	095	5006633	121,00
FR598		1	●	095	5006634	121,00
FR599		1	●	095	5006524	123,00
FR600		1	●	095	5006525	85,80
FR643		1	●	095	5008112	143,00
FR644		1	●	095	5008114	143,00
FR645		1	●	095	5008116	143,00
FR646		1	●	095	5008118	143,00
FR647		1	●	095	5008120	161,00
FR648		1	●	095	5008122	161,00
FR649		1	●	095	5008124	161,00
FR650		1	●	095	5008126	161,00
FR651		1	●	095	5008128	134,00
FR653		1	●	095	5008132	143,00
FR654		1	●	095	5008134	143,00
FR655		1	●	095	5008136	161,00
FR656		1	●	095	5008138	161,00
FR657		1	●	095	5008243	134,00
FR658		1	●	095	5008245	143,00
FR659		1	●	095	5008247	161,00
FR661		1	●	095	5008140	278,00
FR662		1	●	095	5008141	225,00
FR663		1	●	095	5008142	225,00
FR664		1	●	095	5008143	278,00
FR665		1	●	095	5008144	225,00
FR666		1	●	095	5008145	278,00
FR667		1	●	095	5008146	225,00
FR668		1	●	095	5008147	278,00
FR670		1	●	095	5007887	192,00
FR671		1	●	095	5007888	192,00
FR672		1	●	095	5007889	192,00
FR673		1	●	095	5007890	192,00
FR674		1	●	095	5007891	192,00
FR675		1	●	095	5007892	192,00
FR680		1	●	095	5007879	192,00
FR681M		1	●	095	5006635	137,00
FR683		1	●	095	5006527	120,00
FR684		1	●	095	5006637	57,90
FR685		1	●	095	5006639	57,90
FR686		1	●	095	5006641	57,90
FR695		1	●	095	5006651	74,20
FR696		1	●	095	5006652	74,20
FR697		1	●	095	5016140	192,00
FR698		1	●	095	5016134	192,00
FR699		1	●	095	5016141	192,00
FR701		1	●	095	5016143	192,00

Bezeichnung / Designation	Sorte / Grade	VE / US		Disc. Gr.	Article No.	EURO Stück / piece
FR707		1	●	095	5016154	192,00
FR709		1	●	052	5008345	503,00
FR710		1	●	052	5008347	503,00
FR711		1	●	052	5008349	503,00
FR717		1	●	052	5041695	503,00
FR718M		1	●	095	5054032	116,00
FR719M		1	●	095	5054033	116,00
FR720M		1	●	095	5054034	116,00
FR722M		1	●	095	5089287	116,00
FR723M		1	●	095	5119089	116,00
FR724		1	●	095	5160140	57,90
FR725		1	●	095	5160142	57,90
FR726		1	●	095	5160144	57,90
FR728M		1	●	095	5119237	116,00
FR729M		1	●	095	5160146	116,00
FR730M		1	●	095	5364500	116,00
FR731		1	●	095	5547913	116,00
FR732M		1	●	095	5690856	116,00
FR733	WCD10	1	●	006	6079237	98,70
FR734	WCD10	1	●	006	6079261	98,70
FR735	WCD10	1	●	006	6079262	98,70
FR737C-5		1	●	095	5885490	225,00
FR738P-5		1	●	095	5885491	225,00
FR739P-5		1	●	095	5885492	278,00
FR740P-5		1	●	095	5885494	278,00
FR741P-5		1	●	095	5885495	278,00
FR743C-6		1	●	095	5885499	225,00
FR744P-6		1	●	095	5885550	225,00
FR745P-6		1	●	095	5885551	278,00
FR746P-6		1	●	095	5885552	278,00
FR747P-6		1	●	095	5885553	278,00
FR748P-6		1	●	095	5885554	278,00
FR750M		1	●	095	5964365	116,00
FR751M		1	●	095	6583106	116,00
FR752M		1	●	095	6583107	116,00
FR753		5	●	095	6657791	33,80
FR755M		1	●	095	6823972	116,00
FR756M		1	●	095	6823973	116,00
FR757M		1	●	095	6823974	116,00
FR758M		1	●	095	7469810	116,00
FR759M		1	●	095	7469811	116,00
FR760		1	●	052	7053027	553,00
FR761		1	●	052	7053028	553,00
FR763		1	●	052	7053029	553,00
FR764M		1	●	095	8344328	116,00
FR765M		1	●	095	8344329	116,00
FS1001		1	●	095	5006504	5,22
FS1003		1	●	095	5006712	3,64
FS1004		1	●	095	5006713	3,64
FS1005		1	●	095	5006714	3,64
FS1006		1	●	095	5006715	3,64
FS1007		1	●	095	5006716	3,64
FS1008		1	●	095	5006717	3,64
FS1009		1	●	095	5006718	3,64
FS1010		1	●	095	5006726	3,64
FS1011		1	●	095	5006796	3,64
FS1012		1	●	095	5006805	3,64
FS1013		1	●	095	5006806	3,64
FS1015		1	●	095	5006826	6,17
FS1016		1	●	095	5006829	8,79
FS1018		1	●	095	5006907	12,82
FS1019		1	●	095	5013402	12,82
FS1020		1	●	095	5006873	3,64
FS1022		1	●	095	5006551	11,67
FS1023		1	●	095	5006874	5,79
FS1024		1	●	095	5006875	5,79
FS1028		1	●	095	5006704	6,81
FS1029		1	●	095	5006705	3,64
FS1030		1	●	095	5006706	3,64
FS1031		1	●	095	5006707	3,64

Bezeichnung / Designation	Sorte / Grade	VE / US		Disc. Gr.	Article No.	EURO Stück / piece
FS1032		1	●	095	5006878	30,10
FS1033		1	●	095	5006879	52,00
FS1035		1	●	095	5006552	11,29
FS1036		1	●	095	5006708	3,64
FS1038		1	●	095	5006710	33,10
FS1044		1	●	095	5006503	55,90
FS1047		1	●	095	5006505	15,74
FS1048		1	●	095	5006506	15,74
FS1049		1	●	095	5006507	15,74
FS1050		1	●	095	5006508	15,74
FS1051		1	●	095	5006719	3,55
FS1052		1	●	095	5006720	3,68
FS1053		1	●	095	5006721	4,05
FS1054		1	●	095	5006722	4,25
FS1055		1	●	095	5006723	4,34
FS1056		1	●	095	5006724	3,55
FS1057		1	●	095	5006725	3,88
FS1061		1	●	095	5006512	6,17
FS1063		1	●	095	5006514	18,57
FS1064		1	●	095	5006905	17,53
FS1065		1	●	095	5006906	25,90
FS1070		1	●	095	5006732	14,89
FS1076		1	●	095	5006738	23,64
FS1079		1	●	095	5006741	33,80
FS1080		1	●	095	5006742	33,80
FS1082		1	●	095	5006744	2,46
FS1083		1	●	095	5006745	2,46
FS1084		1	●	095	5006746	2,86
FS1085		1	●	095	5006747	2,86
FS1086		1	●	095	5006748	3,55
FS1087		1	●	095	5006749	3,55
FS1088		1	●	095	5006750	4,72
FS1091		1	●	095	5006753	2,86
FS1092		1	●	095	5006754	2,86
FS1093		1	●	095	5006755	8,50
FS1094		1	●	095	5006756	11,67
FS1095		1	●	095	5006757	13,67
FS1096		1	●	095	5006758	16,67
FS1097		1	●	095	5006759	19,78
FS1098		1	●	095	5006760	1,79
FS1099		1	●	095	5006761	1,79
FS1100		1	●	095	5006762	1,79
FS1101		1	●	095	5006763	1,79
FS1102		1	●	095	5006764	1,79
FS1103		1	●	095	5006765	4,05
FS1104		1	●	095	5006766	4,05
FS1105		1	●	095	5006767	4,05
FS1106		1	●	095	5006768	4,42
FS1107		1	●	095	5006769	5,22
FS1108		1	●	095	5006770	5,22
FS1109		1	●	095	5006771	5,22
FS1110		1	●	095	5006772	2,46
FS1111		1	●	095	5006773	2,46
FS1113		1	●	095	5006775	23,64
FS1114		1	●	095	5006776	27,80
FS1128		1	●	095	5006792	18,57
FS1129		1	●	095	5006797	3,64
FS1130		1	●	095	5006522	8,50
FS1131		1	●	095	5006523	8,50
FS1142		1	●	095	5006823	13,67
FS1145		1	●	095	5006824	11,67
FS1147		1	●	095	5006810	3,88
FS1148		1	●	095	5006808	11,29
FS1149		1	●	095	5006811	2,72
FS1150		1	●	095	5014469	3,88
FS1151		1	●	095	5006827	3,64
FS1152		1	●	095	5006828	3,64
FS1153		1	●	095	5006831	11,42
FS1154		1	●	095	5006457	3,39
FS1155		1	●	095	5006458	3,39

Bezeichnung / Designation	Sorte / Grade	VE / US		Disc. Gr.	Article No.	EURO Stück / piece
FS1156		1	●	095	5006531	3,39
FS1158		1	●	095	5006532	3,88
FS1159		1	●	095	5018871	2,46
FS1160		1	●	095	5006834	5,22
FS1161		1	●	095	5006832	3,55
FS1162		1	●	095	5006833	5,22
FS1163		1	●	095	5006837	3,64
FS1164		1	●	095	5006835	3,64
FS1165		1	●	095	5006836	3,64
FS1166		1	●	095	5006539	1,79
FS1167		1	●	095	5006540	1,79
FS1168		1	●	095	5006541	1,79
FS1169		1	●	095	5006536	10,96
FS1170		1	●	095	5006537	10,96
FS1171		1	●	095	5006538	10,96
FS1172		1	●	095	5006459	18,57
FS1173		1	●	095	5006460	18,57
FS1174		1	●	095	5006461	18,57
FS1175		1	●	095	5006462	18,57
FS1176		1	●	095	7650172	18,57
FS1207		1	●	095	5008673	322,00
FS1208		1	●	095	5008674	333,00
FS1209		1	●	095	5006838	18,57
FS1217		1	●	095	5006840	4,34
FS1218		1	●	095	5006841	21,80
FS1220		1	●	095	5006847	1,79
FS1221		1	●	095	5006848	1,79
FS1222		1	●	095	5018863	2,46
FS1230		1	●	095	5006949	12,82
FS1238		1	●	095	5034342	33,80
FS1239		1	●	095	5034343	33,80
FS1240		1	●	095	5034344	33,80
FS1241		1	●	095	5034345	33,80
FS1242		1	●	095	5034346	33,80
FS1243		1	●	095	5034347	33,80
FS1244		1	●	095	5034348	33,80
FS1245		1	●	095	5034349	33,80
FS1246		1	●	095	5034350	33,80
FS1247		1	●	095	5034351	33,80
FS1248		1	●	095	5034352	33,80
FS1249		1	●	095	5034353	33,80
FS1250		1	●	095	5034354	33,80
FS1251		1	●	095	5034355	33,80
FS1252		1	●	095	5034356	33,80
FS1253		1	●	095	5041583	38,00
FS1254		1	●	095	5034357	38,00
FS1255		1	●	095	5034358	38,00
FS1256		1	●	095	5034359	38,00
FS1257		1	●	095	5034360	38,00
FS1258		1	●	095	5034361	38,00
FS1259		1	●	095	5034362	38,00
FS1260		1	●	095	5034363	38,00
FS1261		1	●	095	5034364	38,00
FS1262		1	●	095	5034365	38,00
FS1263		1	●	095	5034366	38,00
FS1264		1	●	095	5034367	38,00
FS1265		1	●	095	5034368	38,00
FS1266		1	●	095	5034369	38,00
FS1267		1	●	095	5034370	38,00
FS1268		1	●	095	5034371	38,00
FS1269		1	●	095	5034372	38,00
FS1270		1	●	095	5034373	38,00
FS1271		1	●	095	5034374	38,00
FS1272		1	●	095	5034375	38,00
FS1273		1	●	095	5034376	38,00
FS1274		1	●	095	5034377	38,00
FS1275		1	●	095	5034378	38,00
FS1276		1	●	095	5034379	38,00
FS1277		1	●	095	5034380	38,00
FS1278		1	●	095	5034381	38,00

Bezeichnung / Designation	Sorte / Grade	VE / US		Disc. Gr.	Article No.	EURO Stück / piece
FS1279		1	●	095	5034382	38,00
FS1280		1	●	095	5034383	44,40
FS1282		1	●	095	5034385	44,40
FS1284		1	●	095	5034387	44,40
FS1285		1	●	095	5034388	44,40
FS1286		1	●	095	5034389	44,40
FS1287		1	●	095	5034390	44,40
FS1288		1	●	095	5034391	44,40
FS1290		1	●	095	5034393	44,40
FS1291		1	●	095	5034394	44,40
FS1292		1	●	095	5034395	44,40
FS1294		1	●	095	5034397	44,40
FS1296		1	●	095	5034399	44,40
FS1297		1	●	095	5034400	44,40
FS1298		1	●	095	5034401	44,40
FS1299		1	●	095	5034402	44,40
FS1300		1	●	095	5034403	44,40
FS1302		1	●	095	5034405	44,40
FS1303		1	●	095	5034406	44,40
FS1304		1	●	095	5034407	44,40
FS1306		1	●	095	5034409	44,40
FS1307		1	●	095	5034410	44,40
FS1308		1	●	095	5034411	44,40
FS1310		1	●	095	5034413	44,40
FS1312		1	●	095	5034415	44,40
FS1313		1	●	095	5034416	44,40
FS1314		1	●	095	5034417	44,40
FS1315		1	●	095	5034418	44,40
FS1318		1	●	095	5034421	44,40
FS1319		1	●	095	5034422	44,40
FS1324		1	●	095	5034427	44,40
FS1325		1	●	095	5034428	44,40
FS1338		1	●	095	5106504	2,50
FS1338		1	●	095	5106504	2,50
FS1339		1	●	095	5106505	3,38
FS1340		1	●	095	5106506	2,76
FS1342		1	●	095	5014470	5,22
FS1345		1	●	095	5016158	71,40
FS1345-SET		1	●	095	8310262	143,00
FS1346		1	●	095	5016159	105,00
FS1346-SET		1	●	095	8310263	210,00
FS1347		1	●	095	5016160	81,10
FS1347-SET		1	●	095	8310264	162,00
FS1348		1	●	095	5016161	93,00
FS1348-SET		1	●	095	8310265	186,00
FS1349		1	●	095	5016162	105,00
FS1349-SET		1	●	095	8310266	210,00
FS1350		1	●	095	5016163	112,00
FS1350-SET		1	●	095	8310267	224,00
FS1351		1	●	095	5016164	199,00
FS1351-SET		1	●	095	8310260	398,00
FS1352		1	●	095	5016165	235,00
FS1352-SET		1	●	095	8310261	470,00
FS1354		1	●	095	5017299	1,79
FS1355		1	●	095	5017300	1,79
FS1356		1	●	095	5017302	192,00
FS1358		1	●	095	5026116	3,64
FS1359		1	●	095	5025855	69,40
FS1360		1	●	095	5025854	88,00
FS1361		1	●	095	5025821	33,80
FS1362		1	●	095	5025831	33,80
FS1363		1	●	095	5025830	33,80
FS1364		1	●	095	5025820	33,80
FS1365		1	●	095	5025832	33,80
FS1366		1	●	095	5025829	44,70
FS1367		1	●	095	5025827	44,70
FS1368		1	●	095	5025710	44,70
FS1369		1	●	095	5025825	44,70
FS1370		1	●	095	5025824	44,70
FS1371		1	●	095	5025823	44,70

Bezeichnung / Designation	Sorte / Grade	VE / US		Disc. Gr.	Article No.	EURO Stück / piece
FS1372		1	●	095	5025822	44,70
FS1373		1	●	095	5025828	44,70
FS1374		1	●	095	5025817	44,70
FS1375		1	●	095	5025818	44,70
FS1376		1	●	095	5025819	44,70
FS1384		1	●	095	5033121	235,00
FS1385		1	●	095	5033122	278,00
FS1386		1	●	095	5033123	317,00
FS1387		1	●	095	5032831	61,80
FS1388		1	●	095	5032833	61,80
FS1389		1	●	095	5032830	61,80
FS1390		1	●	095	5032842	61,80
FS1391		1	●	095	5032828	66,60
FS1392		1	●	095	5032829	71,40
FS1393		1	●	095	5032832	114,00
FS1394		1	●	095	5032834	25,20
FS1395		1	●	095	5036610	1.332,00
FS1396		1	●	095	5038117	10,52
FS1397		1	●	095	5038118	10,52
FS1398		1	●	095	5038119	9,56
FS1399		1	●	095	5038120	9,56
FS1400		1	●	095	5038121	11,42
FS1401		1	●	095	5038122	11,42
FS1402		1	●	095	5038123	11,67
FS1403		1	●	095	5038124	13,23
FS1404		1	●	095	5038125	13,23
FS1407		1	●	095	5038129	1.557,00
FS1408		1	●	095	5041523	33,80
FS1409		1	●	095	5041597	33,80
FS1410		1	●	095	5041954	33,80
FS1411		1	●	095	5041525	33,80
FS1412		1	●	095	5041599	33,80
FS1413		1	●	095	5041589	33,80
FS1414		1	●	095	5041553	33,80
FS1415		1	●	095	5041543	33,80
FS1416		1	●	095	5041541	33,80
FS1417		1	●	095	5041535	33,80
FS1418		1	●	095	5041539	33,80
FS1419		1	●	095	5041537	33,80
FS1420		1	●	095	5041533	33,80
FS1421		1	●	095	5041531	33,80
FS1422		1	●	095	5041529	33,80
FS1423		1	●	095	5041527	33,80
FS1424		1	●	095	5041561	43,80
FS1425		1	●	095	5041591	43,80
FS1426		1	●	095	5041571	43,80
FS1427		1	●	095	5041569	44,70
FS1428		1	●	095	5041567	44,70
FS1429		1	●	095	5041593	44,70
FS1430		1	●	095	5041521	44,70
FS1431		1	●	095	5041575	44,70
FS1432		1	●	095	5041573	44,70
FS1433		1	●	095	5041595	44,70
FS1434		1	●	095	5041581	44,70
FS1435		1	●	095	5041579	44,70
FS1436		1	●	095	5041577	44,70
FS1437		1	●	095	5041551	44,70
FS1438		1	●	095	5041549	44,70
FS1439		1	●	095	5041547	44,70
FS1440		1	●	095	5041545	44,70
FS1441		1	●	095	5041585	44,70
FS1442		1	●	095	5041559	44,70
FS1443		1	●	095	5041557	44,70
FS1444		1	●	095	5041555	44,70
FS1445		1	●	095	5041587	44,70
FS1446		1	●	095	5041565	44,70
FS1447		1	●	095	5041563	44,70
FS1448		1	●	095	5040694	42,90
FS1449		1	●	095	5040688	76,30
FS1450		1	●	095	5041203	105,00

Bezeichnung / Designation	Sorte / Grade	VE / US		Disc. Gr.	Article No.	EURO Stück / piece
FS1451		1	●	095	5040438	45,50
FS1453		1	●	095	5039025	3,64
FS1453-SET		1	●	095	5615432	7,73
FS1454		1	●	095	5039026	3,64
FS1454-SET		1	●	095	5361633	7,73
FS1455		1	●	095	5039030	3,64
FS1456		1	●	095	5039027	3,64
FS1457		1	●	095	5039028	3,64
FS1457-SET		1	●	095	5361634	7,73
FS1458		1	●	095	5039029	3,64
FS1459		1	●	095	5039246	3,64
FS1461		1	●	095	5041494	1,79
FS1462		1	●	095	5041510	4,05
FS1463		1	●	095	5041502	2,57
FS1464		1	●	095	5040976	7,29
FS1465		1	●	095	5040977	7,29
FS1466		1	●	095	5040978	7,29
FS1467		1	●	095	5041508	2,99
FS1469		1	●	095	5041488	1,79
FS1470		1	●	095	5041248	1,79
FS1471		1	●	095	5041484	1,79
FS1472		1	●	095	5041492	10,52
FS1473		1	●	095	5041500	7,73
FS1474		1	●	095	5041482	10,52
FS1475		1	●	095	5041476	8,33
FS1476		1	●	095	5042271	20,41
FS1476HEX		1	●	095	5889178	38,90
FS1476HP		1	●	095	5889174	35,50
FS1477		1	●	095	5042272	21,80
FS1477HEX		1	●	095	5889177	38,90
FS1477HP		1	●	095	5889173	35,50
FS1478		1	○	095	5043616	12,17
FS1479		1	●	095	5043618	21,50
FS1479HEX		1	●	095	5889179	38,90
FS1479HP		1	●	095	5889175	35,50
FS1480		1	○	095	5043620	12,82
FS1483		1	●	095	5043209	18,57
FS1484		1	●	095	5043210	18,57
FS1485		1	●	095	5043211	18,57
FS1486		1	●	095	5043212	18,57
FS1487		1	●	095	5043213	18,57
FS1490		1	●	095	5043770	5,39
FS1491		1	●	095	5048794	10,52
FS1492		1	●	095	5055727	3,21
FS1493		1	●	095	5163279	25,90
FS1494		1	●	095	5163278	25,90
FS1495		1	●	095	5096941	3,64
FS1495-SET		1	●	095	5621079	7,29
FS1496		1	●	095	5169053	5,39
FS1498		1	●	095	7027652	2,46
FS1499		1	●	095	7027653	2,46
FS1518		1	●	095	5037166	2,16
FS1519		1	●	095	5037167	2,72
FS1520		1	●	095	5037168	2,70
FS1521		1	●	095	5037169	9,46
FS1522		1	●	095	5037170	1,88
FS1523		1	●	095	5037171	2,44
FS1524		1	●	095	5037172	2,86
FS1526		1	●	095	5037174	11,33
FS1527		1	●	095	5037175	3,46
FS1528		1	●	095	5037176	2,57
FS1537		1	●	095	5040692	42,90
FS1539		1	●	095	5040706	30,10
FS1540		1	●	095	5040690	50,10
FS1541		1	●	095	5040356	52,00
FS1542		1	●	095	5040666	67,40
FS1544		1	●	095	5040704	34,60
FS1545		1	●	095	5040266	40,70
FS1546		1	●	095	5040702	50,10
FS1583		1	●	095	5053790	7,29

Bezeichnung / Designation	Sorte / Grade	VE / US		Disc. Gr.	Article No.	EURO Stück / piece
FS1586		1	●	095	5054162	3,55
FS1589		1	●	095	5109429	10,52
FS1590		1	●	095	5109431	1,89
FS1591		1	●	095	5109432	21,50
FS1592		1	●	095	5115145	16,30
FS1597		1	●	095	5332825	3,46
FS1614		1	●	095	5346083	3,55
FS1614		1	●	095	5346083	3,55
FS2001		1	●	095	5050320	160,00
FS2002		1	●	095	5050321	171,00
FS2003		1	●	095	5050322	178,00
FS2005		1	●	095	5050324	7,03
FS2006		1	●	095	5050325	7,03
FS2007		1	●	095	5050326	7,03
FS2008		1	●	095	5050327	7,03
FS2009		1	●	095	5050328	7,03
FS2010		1	●	095	5050329	7,03
FS2011		1	●	095	5050330	7,03
FS2012		1	●	095	5050331	7,03
FS2013		1	●	095	5050332	7,03
FS2014		1	●	095	5050333	7,03
FS2015		1	●	095	5050334	7,03
FS2016		1	●	095	5050335	7,03
FS2017		1	●	095	5055726	77,30
FS2018		1	●	095	5103252	5,65
FS2019		1	●	095	5103253	5,65
FS2020		1	●	095	5103254	5,65
FS2021		1	●	095	5103255	5,65
FS2022		1	●	095	5103256	15,06
FS2024		1	●	095	5103258	3,08
FS2025		1	●	095	5103259	3,08
FS2026		1	●	095	5103260	3,55
FS2027		1	●	095	5103261	4,72
FS2028		1	●	095	5103262	4,72
FS2029		1	●	095	5103264	4,72
FS2030		1	●	095	5103265	7,03
FS2031		1	●	095	5106269	5,79
FS2032		1	●	095	5106290	5,79
FS2033		1	●	095	5106291	6,46
FS2034		1	●	095	5106292	7,51
FS2039		1	●	095	5106299	3,68
FS2040		1	●	095	5106300	4,25
FS2041		1	●	095	5107620	309,00
FS2042		1	●	095	5107621	309,00
FS2043		1	●	095	5107622	12,17
FS2044		1	●	095	5107623	12,17
FS2045		1	●	095	5107624	12,17
FS2046		1	●	095	5107625	12,17
FS2047		1	●	095	5107626	12,17
FS2048		1	●	095	5107627	12,17
FS2049		1	●	095	5107628	12,17
FS2050		1	●	095	5107629	12,17
FS2051		1	●	095	5107630	12,17
FS2052		1	●	095	5107631	12,17
FS2053		1	●	095	5107609	98,00
FS2054		1	●	095	5048971	5,53
FS2055		1	●	095	5018857	4,05
FS2058		1	●	095	5054531	6,81
FS2060		1	●	095	5194525	3,64
FS2061		1	●	095	5194526	3,64
FS2062		1	●	095	5194527	3,64
FS2063		1	●	095	5194528	3,64
FS2064		1	●	095	5194529	3,64
FS2065		1	●	095	5194530	3,64
FS2066		1	●	095	5194531	3,64
FS2067		1	●	095	5194532	3,64
FS2068		1	●	095	5194533	5,65
FS2069		1	●	095	5194534	8,33
FS2070		1	●	095	5278168	8,79
FS2071		1	●	095	5278169	8,79

Bezeichnung / Designation	Sorte / Grade	VE / US		Disc. Gr.	Article No.	EURO Stück / piece
FS2072		1	●	095	5278170	8,79
FS2073		1	●	095	5278171	8,79
FS2074		1	●	095	5278172	8,79
FS2075		1	●	095	5278173	8,79
FS2076		1	●	095	5292669	3,88
FS2077		1	●	095	5292740	4,72
FS2078		1	●	095	5292742	3,88
FS2079		1	●	095	5292743	3,88
FS2080		1	●	095	5292744	3,88
FS2080-SET		1	●	095	5547996	7,73
FS2081		1	●	095	5292745	4,72
FS2082		1	●	095	5329487	11,67
FS2083		1	●	095	5329488	11,67
FS2084		1	●	095	5332922	3,88
FS2085		1	●	095	5334289	7,03
FS2086		1	●	095	5334320	18,57
FS2088		1	●	095	5334285	18,57
FS2089		1	●	095	5334327	5,79
FS2090		1	●	095	5334328	4,72
FS2091		1	●	095	5334329	5,65
FS2092		1	●	095	5334350	5,65
FS2093		1	●	095	5336608	8,91
FS2094		1	●	095	5336609	2,46
FS2095		1	●	095	5336670	14,75
FS2096		1	●	095	5336671	4,72
FS2097		1	●	095	5336672	5,22
FS2098		1	●	095	5336673	2,72
FS2099		1	●	095	5336677	2,07
FS2100		1	●	095	5336675	2,46
FS2101		1	●	095	5336678	10,05
FS2102		1	●	095	5336679	10,96
FS2106		1	●	095	5349153	5,79
FS2107		1	●	095	5379173	8,79
FS2108		1	●	095	5511071	18,57
FS2109		1	●	095	5511074	17,53
FS2110		1	●	095	5516956	2,46
FS2111		1	●	095	5520227	3,64
FS2111-SET		1	●	095	5547995	7,73
FS2112		1	●	095	5526214	4,72
FS2113		1	●	095	5526217	11,67
FS2114		1	●	095	5547993	3,88
FS2116		1	●	095	5555378	12,40
FS2117		1	●	095	5555379	12,40
FS2118		1	●	095	5566295	10,52
FS2119		1	●	095	5589821	4,72
FS2120		1	●	095	5605116	3,88
FS2120-SET		1	●	095	5613118	7,73
FS2121		1	●	052	5613407	1,82
FS2122		1	●	052	5613470	5,15
FS2123		1	●	052	5613471	49,90
FS2124-E10		1	●	MA1	5613701	8,25
FS2125-E12		1	●	MA1	5613707	12,54
FS2126-E16		1	●	MA1	5613708	12,54
FS2127-E20		1	●	MA1	5613709	13,03
FS2128-E25		1	●	MA1	5613770	14,86
FS2129		1	●	095	5616823	4,25
FS2131		1	●	095	5601944	340,00
FS2132		1	●	095	5601945	388,00
FS2133		1	●	095	5601946	467,00
FS2134		1	●	095	5671103	3,55
FS2135-E10-R		1	●	095	5678641	98,00
FS2136-E12-R		1	●	095	5678644	98,00
FS2137-E16-R		1	●	095	5678646	98,00
FS2138-E20-R		1	●	095	5678647	98,00
FS2139		1	●	095	5690973	4,42
FS2140 SET KOMPLETT		1	●	095	5783241	82,90
FS2141-E25-R		1	●	095	5833821	98,00
FS2145		1	●	095	5837348	11,67
FS2146		1	●	095	5837751	5,53
FS2147		1	●	095	5837718	5,22

Bezeichnung / Designation	Sorte / Grade	VE / US		Disc. Gr.	Article No.	EURO Stück / piece
FS2148		1	●	095	5837719	6,17
FS2149		1	●	095	5837750	3,21
FS2150		1	●	095	5846630	11,29
FS2155		1	●	095	5871649	4,25
FS2156		1	●	095	5871660	4,25
FS2157		1	●	095	5872815	3,55
FS2158		1	●	095	5900650	5,53
FS2159		1	●	095	5901156	13,23
FS2160		1	●	095	5895664	28,90
FS2161		1	●	095	5886185	38,00
FS2163		1	●	095	5919943	3,64
FS2164		1	●	095	5930317	3,64
FS2165		1	●	095	5932714	340,00
FS2167		1	●	095	5945344	18,57
FS2169		1	●	095	5955149	1,79
FS2170		1	●	095	5955171	2,72
FS2171		1	●	095	5955172	1,79
FS2172		1	●	095	6015732	3,64
FS2174		1	●	095	6039291	1,79
FS2175		1	●	095	6039275	1,79
FS2176		1	●	095	6039276	2,19
FS2177		1	●	095	6039277	1,79
FS2178		1	●	095	6039278	2,19
FS2179		1	●	095	6050513	1,79
FS2180		1	●	095	6050515	2,19
FS2181		1	●	095	6084601	3,64
FS2182		1	●	095	6138340	2,57
FS2183		1	●	095	6248262	46,50
FS2184		1	●	095	6264969	3,64
FS2185		1	●	095	6300771	3,88
FS2186		1	●	095	6300918	3,88
FS2187		1	●	095	6313150	3,64
FS2188		1	●	095	6313956	2,68
FS2189		1	●	075	6358087	124,00
FS2190		1	●	075	6358088	124,00
FS2191		1	●	075	6358089	124,00
FS2192		1	●	075	6358210	124,00
FS2193		1	●	075	6358211	124,00
FS2194		1	●	075	6358212	174,00
FS2195		1	●	075	6358213	174,00
FS2196		1	●	075	6358214	174,00
FS2197		1	●	075	6358215	174,00
FS2198		1	●	075	6358217	174,00
FS2199		1	●	075	6358340	131,00
FS2200		1	●	075	6358341	131,00
FS2201		1	●	075	6358343	131,00
FS2202		1	●	075	6358344	131,00
FS2203		1	●	075	6358345	131,00
FS2204		1	●	075	6358346	131,00
FS2205		1	●	075	6358347	131,00
FS2206		1	●	075	6358348	131,00
FS2207		1	●	075	6358349	131,00
FS2208		1	●	075	6358360	131,00
FS2209		1	●	075	6358361	131,00
FS2210		1	●	075	6358362	131,00
FS2211		1	●	075	6358363	131,00
FS2212		1	●	075	6358364	131,00
FS2213		1	●	075	6358365	183,00
FS2214		1	●	075	6358366	183,00
FS2215		1	●	075	6358368	183,00
FS2216		1	●	075	6358369	183,00
FS2217		1	●	075	6358410	183,00
FS2218		1	●	075	6358412	183,00
FS2219		1	●	075	6358413	183,00
FS2220		1	●	075	6358414	183,00
FS2221		1	●	075	6358415	183,00
FS2222		1	●	075	6362284	144,00
FS2223		1	●	075	6362285	144,00
FS2224		1	●	075	6362287	144,00
FS2225		1	●	075	6362289	144,00

Bezeichnung / Designation	Sorte / Grade	VE / US		Disc. Gr.	Article No.	EURO Stück / piece
FS2226		1	●	075	6362307	144,00
FS2227		1	●	075	6362308	144,00
FS2228		1	●	075	6362309	144,00
FS2229		1	●	075	6362340	144,00
FS2230		1	●	075	6362341	144,00
FS2231		1	●	075	6362342	201,00
FS2232		1	●	075	6362344	201,00
FS2233		1	●	075	6362345	201,00
FS2234		1	●	075	6362346	201,00
FS2235		1	●	075	6362347	201,00
FS2236		1	●	075	6362349	201,00
FS2237		1	●	075	6362390	201,00
FS2238		1	●	075	6362391	201,00
FS2239		1	●	075	6362392	201,00
FS224		1	●	095	5006193	5,22
FS2240		1	●	095	6385825	3,64
FS2241		1	●	095	6385826	3,64
FS2242		1	●	095	6385827	4,34
FS2244		1	●	095	6706435	3,88
FS2245		1	●	095	6411074	3,88
FS2248		1	●	095	6421702	333,00
FS2249		1	●	095	6421732	25,90
FS2250		1	●	095	6421776	1,79
FS2251		1	●	095	6461484	2,46
FS2252		1	●	095	6470220	6,30
FS2253		1	●	095	6470222	6,30
FS2254		1	●	095	6470223	4,34
FS2255		1	●	095	6470224	4,34
FS2256		1	●	095	6470226	5,39
FS2257		1	●	095	6470227	1,79
FS2258		1	●	095	6470228	4,25
FS2259		1	●	095	6470229	2,72
FS2260		1	●	095	6470250	8,00
FS2261		1	●	095	6470251	1,89
FS2265		1	●	095	6527931	3,55
FS2266		1	●	095	6550405	3,64
FS2267		1	●	095	6550406	18,57
FS2268		1	●	095	6550407	7,03
FS2269		1	●	095	6550469	1,79
FS227		1	●	095	5006194	5,22
FS2270		1	●	095	6682462	8,00
FS2271		1	●	095	6682463	11,29
FS2272		1	●	095	6682464	15,74
FS2274		1	●	095	6728378	25,90
FS2275		1	●	095	6730792	35,90
FS2278		1	●	095	6730816	1,79
FS2279		1	●	095	6768463	3,64
FS228		1	●	095	5006455	18,57
FS2280		1	●	095	6823453	5,29
FS2281		1	●	095	6836987	3,64
FS2282		1	●	095	6841136	10,52
FS2283		1	●	095	6841137	12,17
FS2284		1	●	095	6841138	13,67
FS2285		1	●	095	6841139	16,30
FS2286		1	●	095	6841140	19,29
FS2287		1	○	095	6841165	1,79
FS2288		1	●	095	6807236	1,79
FS229		1	●	095	5006454	18,57
FS2290		1	●	095	7101226	74,00
FS2291		1	●	095	7101174	105,00
FS2291-SET		1	●	095	8310268	210,00
FS2292		1	●	095	7101175	81,10
FS2292-SET		1	●	095	8310269	162,00
FS2298		1	●	095	7246565	2,68
FS2299		1	●	095	7461960	4,72
FS230		1	●	095	5006453	18,57
FS2300		1	●	095	7607593	3,64
FS231		1	●	095	5006197	3,55
FS234		1	●	095	5006199	3,55
FS235		1	●	095	5006200	3,55

Bezeichnung / Designation	Sorte / Grade	VE / US		Disc. Gr.	Article No.	EURO Stück / piece
FS239		1	●	095	5006196	3,55
FS242		1	●	095	5006208	3,64
FS243		1	●	095	5006673	3,64
FS244		1	●	095	5006674	3,64
FS245		1	●	095	5006675	3,64
FS246		1	●	095	5006676	3,64
FS247		1	●	095	5006677	3,88
FS248		1	●	095	5006678	7,51
FS249		1	●	095	5006679	8,33
FS250		1	●	095	5006680	8,79
FS255		1	●	095	5008715	6,46
FS2553		1	●	095	7228578	21,50
FS2554		1	●	095	7228579	14,75
FS2557		1	●	095	6837620	54,30
FS2558		1	●	095	5115619	56,90
FS2559		1	●	095	5115620	64,60
FS256		1	●	095	5168260	6,46
FS2560		1	●	095	7394245	3,64
FS2560-SET		1	●	095	7725543	7,73
FS2565		1	●	095	7430431	268,00
FS257		1	●	095	5008716	6,46
FS2570		1	●	095	7547522	3,64
FS2571		1	●	095	7547523	3,64
FS2572		1	●	095	7547524	7,29
FS2573		1	●	095	7616720	3,64
FS2574		1	●	095	7625270	3,64
FS2576		1	●	095	7641919	3,64
FS2577		1	●	095	7650173	18,57
FS2578		1	●	095	7650174	3,55
FS2579		1	●	095	7654920	3,64
FS258		1	●	095	5006883	3,64
FS2580		1	●	095	7673633	3,55
FS2581		1	●	095	7673634	7,11
FS2583		1	●	095	7781240	3,39
FS2584		1	●	095	7781241	3,39
FS2585		1	●	095	7781242	3,64
FS2586		1	●	095	7781243	3,64
FS2587		1	●	095	7781244	1,79
FS2588		1	●	095	7789269	10,52
FS2589		1	●	095	7804163	3,64
FS2590		1	●	095	7807027	4,71
FS2591		1	●	095	7807026	5,73
FS2592		1	●	095	7807028	11,49
FS2593		1	●	095	7820677	4,25
FS2594		1	●	095	7820673	4,34
FS2595		1	●	095	7820674	6,30
FS2596		1	●	095	7820675	4,34
FS2597		1	●	095	7820672	6,30
FS2598		1	●	095	7820676	1,79
FS2599		1	●	095	7858548	4,06
FS260		1	●	095	5006884	3,64
FS2609		1	●	095	7941808	13,26
FS2610		1	●	095	7941809	26,90
FS2611		1	●	095	7941900	13,26
FS2614		1	●	095	7955851	4,05
FS2615		1	●	095	7968101	3,26
FS2616		1	●	095	7968102	3,72
FS2617		1	●	095	7980533	3,64
FS2621		1	●	095	8192851	11,67
FS2622		1	●	095	8257397	1,79
FS2623		1	●	095	8261750	11,06
FS2624		1	●	095	8261751	7,97
FS2625		1	●	095	8261752	8,29
FS2626		1	●	095	8261753	3,41
FS2627		1	●	095	8261754	3,41
FS2628		1	●	095	8261755	7,97
FS2629		1	●	095	8261756	7,97
FS2630		1	●	095	8261757	7,97
FS2631		1	●	095	8261758	9,19
FS2632		1	●	095	8261759	9,71

Bezeichnung / Designation	Sorte / Grade	VE / US		Disc. Gr.	Article No.	EURO Stück / piece
FS2633		1	●	095	8261760	5,02
FS2634		1	●	095	8261761	5,09
FS2635		1	●	095	8261762	5,09
FS2636		1	●	095	8261763	6,60
FS2637		1	●	095	8261764	2,66
FS2638		1	●	095	8261765	4,47
FS2639		1	●	095	8261766	5,19
FS2640		1	●	095	8261767	1,07
FS2641		1	●	095	8261768	0,78
FS2642		1	●	095	8261769	0,17
FS2643		1	●	095	8261770	0,99
FS2644		1	●	095	8261771	2,30
FS2645		1	●	095	8261772	3,73
FS2646		1	●	095	8261773	0,77
FS2647		1	●	095	8261774	0,70
FS2648		1	●	095	8261775	1,79
FS2649		1	●	095	8261776	0,70
FS2650		1	●	095	8261777	0,87
FS2651		1	●	095	8261778	1,09
FS2652		1	●	095	8261779	1,74
FS2653		1	●	095	8261780	23,34
FS2654		1	●	095	8261781	0,75
FS2655		1	●	095	8261782	46,30
FS2656		1	●	095	8261783	1,79
FS2657		1	●	095	8261784	0,99
FS2658		1	●	095	8261785	3,41
FS2659		1	●	095	8261786	36,60
FS2660		1	●	095	8261787	8,21
FS2661		1	●	095	8261788	3,41
FS2662		1	●	095	8261789	1,24
FS2663		1	●	095	8261790	1,79
FS2664		1	●	095	8266300	3,41
FS2665		1	●	095	8266301	3,41
FS2666		1	●	095	8266302	3,41
FS2670		1	●	095	8298274	29,80
FS2671		1	●	095	8298275	0,98
FS2672		1	●	095	8472235	16,30
FS293		1	●	095	5006681	8,79
FS303		1	●	095	5006683	6,46
FS305		1	●	095	5006684	7,29
FS309		1	●	095	5006452	18,57
FS318		1	●	095	5006692	3,64
FS319		1	●	095	5006693	3,64
FS320		1	●	095	5006689	3,64
FS321		1	●	095	5006690	3,64
FS322		1	●	095	5006691	3,64
FS325		1	●	095	5008350	5,53
FS326		1	●	095	5006694	3,64
FS331		1	●	095	5008491	4,25
FS332		1	●	095	5008492	4,25
FS333		1	●	095	5008493	3,26
FS334		1	●	095	5008494	3,26
FS335		1	●	095	5008495	3,68
FS337		1	●	095	5008496	3,26
FS338		1	■	095	5008497	3,68
FS339		1	●	095	5008498	3,68
FS344		1	●	095	5008515	7,29
FS346		1	●	095	5008511	4,25
FS347		1	●	095	5008667	4,72
FS351		1	●	095	5008468	4,72
FS352		1	●	095	5008469	4,25
FS354		1	●	095	5008471	4,25
FS355		1	●	095	5008472	4,72
FS356		1	●	095	5008473	4,72
FS357		1	●	095	5008474	5,02
FS358		1	●	095	5008488	3,68
FS359		1	●	095	5008516	3,64
FS369		1	●	095	5008720	3,26
FS370		1	●	095	5006696	21,50
FS371		1	●	095	5006697	30,10

Bezeichnung / Designation	Sorte / Grade	VE / US		Disc. Gr.	Article No.	EURO Stück / piece
FS372		1	●	095	5006698	31,00
FS373		1	●	095	5006699	52,00
FS374		1	●	095	5006700	54,30
FS375		1	●	095	5008517	3,64
FS376		1	●	095	5008518	3,88
FS378		1	●	095	5008560	3,64
FS379		1	●	095	5008561	3,64
FS383		1	●	095	5008573	3,46
FS384		1	●	095	5008574	4,25
FS396		1	●	095	5006456	18,57
FS398		1	●	095	5008657	102,00
FS399		1	●	095	5008658	129,00
FS402		1	●	095	5008353	27,50
FS403		1	●	095	5008354	27,50
FS404		1	●	095	5008355	27,50
FS405		1	●	095	5008356	37,00
FS410		1	●	095	5008357	16,67
FS411		1	●	095	5008358	19,29
FS412		1	●	095	5008359	21,50
FS413		1	●	095	5008360	22,96
FS414		1	●	095	5008361	24,30
FS415		1	●	095	5008362	36,60
FS416		1	●	095	5008363	48,50
FS417		1	●	095	5008364	63,50
FS418		1	●	095	5008365	22,96
FS419		1	●	095	5008366	26,90
FS420		1	●	095	5008367	30,50
FS421		1	●	095	5008368	35,90
FS422		1	●	095	5008369	51,20
FS423		1	●	095	5008370	51,20
FS424		1	●	095	5008371	51,20
FS425		1	●	095	5008372	63,50
FS426		1	●	095	5008373	77,30
FS427		1	●	095	5008374	91,90
FS428		1	●	095	5008375	118,00
FS430		1	●	095	5008377	9,06
FS431		1	●	095	5008378	11,67
FS432		1	●	095	5008379	14,10
FS433		1	●	095	5008380	18,57
FS434		1	●	095	5008381	30,50
FS435		1	●	095	5008382	46,50
FS436		1	●	095	5008383	22,96
FS437		1	●	095	5008384	26,90
FS438		1	●	095	5008385	30,10
FS439		1	●	095	5008386	40,70
FS440		1	●	095	5008387	51,20
FS441		1	●	095	5008388	73,40
FS463		1	●	095	5008408	6,81
FS464		1	●	095	5008409	9,06
FS465		1	●	095	5008410	7,51
FS466		1	●	095	5008411	7,51
FS467		1	●	095	5008412	8,50
FS468		1	●	095	5008413	10,37
FS470		1	●	095	5008415	8,50
FS471		1	●	095	5008416	9,06
FS472		1	●	095	5008417	12,17
FS473		1	●	095	5008418	10,37
FS474		1	●	095	5008419	10,37
FS475		1	●	095	5008420	10,70
FS476		1	●	095	5008421	15,06
FS477		1	●	095	5008422	10,52
FS478		1	●	095	5008423	12,17
FS479		1	●	095	5008424	15,74
FS480		1	●	095	5008425	18,34
FS481		1	●	095	5008426	14,10
FS482		1	●	095	5008427	16,30
FS483		1	●	095	5008428	18,34
FS484		1	●	095	5008429	21,50
FS493		1	●	095	5006410	9,06
FS494		1	●	095	5006411	9,06

Bezeichnung / Designation	Sorte / Grade	VE / US		Disc. Gr.	Article No.	EURO Stück / piece
FS502		1	●	095	5006418	4,34
FS503		1	●	095	5006419	4,34
FS504		1	●	095	5006420	4,34
FS517		1	●	095	5006421	9,06
FS524		1	○	095	5008441	16,30
FS526		1	○	095	5008442	19,78
FS527		1	○	095	5008443	19,78
FS536		1	○	095	5008444	59,70
FS538		1	○	095	5008446	59,70
FS539		1	○	095	5008447	59,70
FS540		1	○	095	5008448	59,70
FS541		1	○	095	5008449	59,70
FS542		1	○	095	5008450	59,70
FS543		1	○	095	5008451	54,30
FS544		1	○	095	5008452	54,30
FS545		1	○	095	5008453	54,30
FS546		1	○	095	5008454	54,30
FS554		1	●	095	5008403	44,70
FS555		1	●	095	5008404	47,20
FS556		1	●	095	5008405	49,30
FS557		1	●	095	5008389	47,20
FS558		1	●	095	5008390	49,30
FS653		1	●	095	5008512	82,90
FS655		1	●	095	5008514	22,96
FS663		1	●	095	5006903	38,00
FS670		1	●	095	5002226	20,41
FS711		1	●	095	5008564	76,30
FS712		1	●	095	5008565	76,30
FS722		1	●	095	5008615	340,00
FS723		1	●	095	5008616	388,00
FS724		1	●	095	5008617	467,00
FS738		1	●	095	5008662	69,40
FS739		1	●	095	5008663	74,20
FS740		1	●	095	5008664	74,20
FS741		1	●	095	5008665	82,90
FS743		1	●	095	5008668	12,55
FS746		1	●	095	5006463	3,55
FS747		1	●	095	5006849	4,05
FS749		1	●	095	5006851	3,64
FS752		1	●	095	5008520	8,33
FS753		1	●	095	5008521	13,23
FS759		1	●	095	5008527	23,64
FS765		1	●	095	5008533	18,34
FS779		1	○	095	5008584	66,60
FS792		1	○	095	5008580	786,00
FS794		1	○	095	5008582	45,50
FS797		1	●	095	5008575	123,00
FS831		1	●	095	5008594	33,80
FS832		1	●	095	5008595	36,60
FS835		1	●	095	5008599	8,50
FS836		1	●	095	5008600	9,06
FS837		1	●	095	5008601	10,96
FS838		1	●	095	5008602	12,17
FS839		1	●	095	5008603	12,82
FS840		1	●	095	5008604	12,82
FS842		1	●	095	5008606	16,30
FS843		1	●	095	5008607	19,78
FS844		1	●	095	5008608	15,06
FS845		1	●	095	5008609	15,63
FS905		1	●	095	5008677	4,25
FS912		1	●	095	5008683	67,40
FS913		1	●	095	5008684	109,00
FS914		1	●	095	5008685	73,40
FS915		1	●	095	5008686	20,41
FS916		1	●	095	5008687	22,96
FS917		1	●	095	5008688	24,30
FS918		1	●	095	5008689	38,90
FS920		1	●	095	5006852	3,64
FS922		1	●	095	5006853	6,17
FS923		1	●	095	5006854	3,64

Bezeichnung / Designation	Sorte / Grade	VE / US		Disc. Gr.	Article No.	EURO Stück / piece
FS924		1	●	095	5006855	3,64
FS925		1	●	095	5006856	5,53
FS929		1	●	095	5008693	33,10
FS936 SET KOMPLETT		1	●	095	5008704	317,00
FS938		1	●	095	5008698	3,39
FS939		1	●	095	5008699	3,68
FS940		1	●	095	5008700	4,05
FS941		1	●	095	5008701	4,72
FS942		1	●	095	5008702	5,53
FS945		1	●	095	5008705	21,80
FS946		1	●	095	5008706	23,64
FS952		1	●	095	5008712	69,40
FS953		1	●	095	5008713	85,80
FS954		1	●	095	5006857	3,64
FS960		1	●	095	5006863	2,72
FS962		1	●	095	5006865	3,26
FS963		1	●	095	5006866	1,79
FS964		1	●	095	5006867	2,72
FS965		1	●	095	5006868	2,72
FS966		1	●	095	5006869	2,31
FS968		1	●	095	5018856	1,79
FS969		1	●	095	5013421	1,79
FS972		1	●	095	5035318	3,46
FS974		1	●	095	5002215	2,72
FS975		1	●	095	5026031	3,55
FS976		1	●	095	5006790	2,72
FS977		1	●	095	5006791	2,86
FX3.1-E310N015-CE4	WPP23	10	●	020	5338228	17,00
FX3.1-E310N015-CE4	WSM33	10	●	020	5338533	17,00
FX3.1-E310N015-CE4	WSP43	10	●	020	5338534	17,00
FX4.1-E410L6-CE4	WSM33	10	●	020	5338539	18,00
FX4.1-E410N020-CE4	WSM33	10	●	020	5338551	18,00
FX4.1-E410N020-CE4	WSP43	10	●	020	5338552	18,00
FX4.1-E410N020-CE6	WSP43	10	●	020	5339657	18,00
G1011-C3L-3T21GX24-P		1	●	065	7957631	463,00
G1011-C3R-3T21GX24-P		1	●	065	7957632	463,00
G1011-C4L-3T21GX24-P		1	●	065	7957633	463,00
G1011-C4L-4T21GX24-P		1	●	065	7957637	463,00
G1011-C4L-5T21GX24-P		1	●	065	7957663	463,00
G1011-C4R-3T21GX24-P		1	●	065	7957634	463,00
G1011-C4R-4T21GX24-P		1	●	065	7957638	463,00
G1011-C4R-5T21GX24-P		1	●	065	7957664	463,00
G1011-C5L-3T21GX24-P		1	●	065	7957635	515,00
G1011-C5L-4T21GX24-P		1	●	065	7957639	515,00
G1011-C5L-5T21GX24-P		1	●	065	7957665	515,00
G1011-C5R-3T21GX24-P		1	●	065	7957636	515,00
G1011-C5R-4T21GX24-P		1	●	065	7957660	515,00
G1011-C5R-5T21GX24-P		1	●	065	7957666	515,00
G1011-C6L-4T21GX24-P		1	●	065	7957661	591,00
G1011-C6L-5T21GX24-P		1	●	065	7957667	591,00
G1011-C6R-4T21GX24-P		1	●	065	7957662	591,00
G1011-C6R-5T21GX24-P		1	●	065	7957668	591,00
G1011.08L-2T12GX16		1	●	060	6061522[1]	123,00
G1011.08R-2T12GX16		1	●	060	6061519[1]	123,00
G1011.10L-3T12GX24		1	●	060	6061608	129,00
G1011.10L-3T21GX24		1	●	060	6061611	129,00
G1011.10R-3T12GX24		1	●	060	6061605	129,00
G1011.10R-3T21GX24		1	●	060	6061609	129,00
G1011.1212L-2T12GX16		1	●	060	5950237[1]	123,00
G1011.1212L-2T12GX16-P		1	●	060	7463482[2]	185,00
G1011.1212L-2T8GX16		1	■	060	5950236[3]	123,00
G1011.1212R-2T12GX16		1	●	060	5950235[1]	123,00
G1011.1212R-2T8GX16		1	■	060	5950231[3]	123,00
G1011.12L-2T21GX24		1	●	060	6737581	148,00
G1011.12L-3T12GX24		1	●	060	5622794	148,00
G1011.12L-3T21GX24		1	●	060	5622797	148,00
G1011.12L-3T21GX24-P		1	●	060	6607606	223,00
G1011.12L-3T33GX34-P		1	●	060	7337664	223,00
G1011.12L-4T12GX24		1	●	060	5622804	148,00
G1011.12L-4T21GX24		1	●	060	5622807	148,00

Bezeichnung / Designation	Sorte / Grade	VE / US		Disc. Gr.	Article No.	EURO Stück / piece
G1011.12L-4T21GX24-P		1	●	060	6827193	223,00
G1011.12L-4T33GX34-P		1	●	060	7337668	223,00
G1011.12L-5T21GX24-P		1	●	060	6827198	223,00
G1011.12L-6T12GX24		1	●	060	5622822	148,00
G1011.12L-6T21GX24		1	●	060	5622824	148,00
G1011.12R-2T15GX16		1	■	060	6061541[3]	148,00
G1011.12R-2T21GX24		1	●	060	6737582	148,00
G1011.12R-3T12GX24		1	●	060	5622793	148,00
G1011.12R-3T21GX24		1	●	060	5622796	148,00
G1011.12R-3T21GX24-P		1	●	060	6607607	223,00
G1011.12R-3T33GX34-P		1	●	060	7337665	223,00
G1011.12R-4T12GX24		1	●	060	5622803	148,00
G1011.12R-4T21GX24		1	●	060	5622806	148,00
G1011.12R-4T21GX24-P		1	●	060	6827195	223,00
G1011.12R-4T33GX34-P		1	●	060	7337669	223,00
G1011.12R-5T12GX24		1	●	060	5622812	148,00
G1011.12R-5T21GX24-P		1	●	060	6827199	223,00
G1011.12R-6T12GX24		1	●	060	5622821	148,00
G1011.12R-6T21GX24		1	●	060	5622823	148,00
G1011.1616L-2T15GX16		1	●	060	5950241[2]	129,00
G1011.1616L-2T15GX16-P		1	●	060	6607590[1]	194,00
G1011.1616L-2T21GX24		1	●	060	6530871	129,00
G1011.1616L-2T21GX24-P		1	●	060	6607594	194,00
G1011.1616L-2T8GX16		1	●	060	5950240[2]	129,00
G1011.1616L-3T12GX24		1	●	060	5950259	129,00
G1011.1616L-3T12GX24-P		1	●	060	7631323	194,00
G1011.1616L-3T15GX16-P		1	●	060	7107481[1]	194,00
G1011.1616L-3T21GX24		1	●	060	5886956	129,00
G1011.1616L-3T21GX24-P		1	●	060	6607598	194,00
G1011.1616L-4T12GX24		1	●	060	5950266	129,00
G1011.1616L-4T12GX24-P		1	●	060	7463480	194,00
G1011.1616L-4T21GX24		1	●	060	5886959	129,00
G1011.1616R-2T15GX16		1	●	060	5950239[2]	129,00
G1011.1616R-2T15GX16-P		1	●	060	6607591[1]	194,00
G1011.1616R-2T21GX24		1	●	060	6530872	129,00
G1011.1616R-2T21GX24-P		1	●	060	6607595	194,00
G1011.1616R-2T8GX16		1	●	060	5950238[2]	129,00
G1011.1616R-3T12GX24		1	●	060	5950256	129,00
G1011.1616R-3T12GX24-P		1	●	060	7631322	194,00
G1011.1616R-3T15GX16-P		1	●	060	7107482[1]	194,00
G1011.1616R-3T21GX24		1	●	060	5886955	129,00
G1011.1616R-3T21GX24-P		1	●	060	6607599	194,00
G1011.1616R-4T12GX24		1	●	060	5950265	129,00
G1011.1616R-4T12GX24-P		1	●	060	7463269	194,00
G1011.1616R-4T21GX24		1	●	060	5886958	129,00
G1011.16L-2T15GX16-P		1	■	060	6607610[3]	238,00
G1011.16L-2T21GX24		1	●	060	6737583	159,00
G1011.16L-3T12GX24		1	●	060	5622790	159,00
G1011.16L-3T12GX24-P		1	●	060	7631328	238,00
G1011.16L-3T21GX24		1	●	060	5622792	159,00
G1011.16L-3T21GX24-P		1	●	060	6607608	238,00
G1011.16L-3T33GX34-P		1	●	060	7337666	238,00
G1011.16L-4T12GX24		1	●	060	5622800	159,00
G1011.16L-4T21GX24		1	●	060	5622802	159,00
G1011.16L-4T21GX24-P		1	●	060	6827196	238,00
G1011.16L-4T32GX24		1	●	060	7463268	159,00
G1011.16L-4T32GX24-P		1	●	060	7463267	238,00
G1011.16L-4T33GX34-P		1	●	060	7337670	238,00
G1011.16L-5T12GX24-P		1	●	060	6955235	238,00
G1011.16L-5T21GX24		1	●	060	5622811	159,00
G1011.16L-5T21GX24-P		1	●	060	6827210	238,00
G1011.16L-5T32GX24		1	●	060	6061653	159,00
G1011.16L-5T32GX24-P		1	●	060	6955236	238,00
G1011.16L-6T12GX24		1	●	060	5622818	159,00
G1011.16L-6T12GX24-P		1	●	060	6955239	238,00
G1011.16L-6T21GX24		1	●	060	5622820	159,00
G1011.16L-6T21GX24-P		1	●	060	6827212	238,00
G1011.16L-6T32GX24		1	●	060	6061656	159,00
G1011.16L-6T32GX24-P		1	●	060	6827213	238,00
G1011.16L-8T28GX30		1	●	060	6280567	159,00

Bezeichnung / Designation	Sorte / Grade	VE / US		Disc. Gr.	Article No.	EURO Stück / piece
G1011.16R-2T15GX16		1	■	060	6061597[1]	159,00
G1011.16R-2T15GX16-P		1	■	060	6607611[1]	238,00
G1011.16R-2T21GX24		1	●	060	6737584	159,00
G1011.16R-2T8GX16		1	■	060	6061594[1]	159,00
G1011.16R-3T12GX24		1	●	060	5622763	159,00
G1011.16R-3T12GX24-P		1	●	060	7631327	238,00
G1011.16R-3T21GX24		1	●	060	5622791	159,00
G1011.16R-3T21GX24-P		1	●	060	6607609	238,00
G1011.16R-3T33GX34-P		1	●	060	7337667	238,00
G1011.16R-4T12GX24		1	●	060	5622799	159,00
G1011.16R-4T12GX24-P		1	●	060	6955234	238,00
G1011.16R-4T21GX24		1	●	060	5622801	159,00
G1011.16R-4T21GX24-P		1	●	060	6827197	238,00
G1011.16R-4T32GX24		1	●	060	7463266	159,00
G1011.16R-4T32GX24-P		1	●	060	7463265	238,00
G1011.16R-4T33GX34-P		1	●	060	7337671	238,00
G1011.16R-5T12GX24-P		1	●	060	6955237	238,00
G1011.16R-5T21GX24		1	●	060	5622810	159,00
G1011.16R-5T21GX24-P		1	●	060	6827211	238,00
G1011.16R-5T32GX24		1	●	060	6061652	159,00
G1011.16R-5T32GX24-P		1	●	060	6955238	238,00
G1011.16R-6T12GX24		1	●	060	5622817	159,00
G1011.16R-6T12GX24-P		1	●	060	6955290	238,00
G1011.16R-6T21GX24		1	●	060	5622819	159,00
G1011.16R-6T21GX24-P		1	●	060	6827214	238,00
G1011.16R-6T32GX24		1	●	060	6061654	159,00
G1011.16R-6T32GX24-P		1	●	060	6827215	238,00
G1011.16R-8T28GX30		1	●	060	6280566	159,00
G1011.2012L-3T21GX24		1	●	060	5950260	148,00
G1011.2012R-3T21GX24		1	●	060	5950263	148,00
G1011.2020L-2T15GX16		1	●	060	5950250[2]	148,00
G1011.2020L-2T15GX16-P		1	●	060	6607592[3]	223,00
G1011.2020L-2T21GX24		1	●	060	6530873	148,00
G1011.2020L-2T21GX24-P		1	●	060	6607596	223,00
G1011.2020L-2T8GX16		1	■	060	5950248[1]	148,00
G1011.2020L-3T12GX24		1	●	060	5476817	148,00
G1011.2020L-3T12GX24-P		1	●	060	7631267	223,00
G1011.2020L-3T15GX16-P		1	●	060	7107483[3]	223,00
G1011.2020L-3T21GX24		1	●	060	5476819	148,00
G1011.2020L-3T21GX24-P		1	●	060	6607600	223,00
G1011.2020L-3T33GX34-P		1	●	060	7337562	223,00
G1011.2020L-4T12GX24		1	●	060	5479771	148,00
G1011.2020L-4T12GX24-P		1	●	060	6827146	223,00
G1011.2020L-4T21GX24		1	●	060	5479773	148,00
G1011.2020L-4T21GX24-P		1	●	060	6827147	223,00
G1011.2020L-4T33GX34-P		1	●	060	7337566	223,00
G1011.2020L-5T12GX24		1	●	060	5479777	148,00
G1011.2020L-5T12GX24-P		1	●	060	6957490	223,00
G1011.2020L-5T21GX24		1	●	060	5479780	148,00
G1011.2020L-5T21GX24-P		1	●	060	6827184	223,00
G1011.2020L-6T12GX24		1	●	060	5479784	148,00
G1011.2020L-6T21GX24		1	●	060	5479787	148,00
G1011.2020R-2T15GX16		1	●	060	5950247[2]	148,00
G1011.2020R-2T15GX16-P		1	●	060	6607593[3]	223,00
G1011.2020R-2T21GX24		1	●	060	6530874	148,00
G1011.2020R-2T21GX24-P		1	●	060	6607597	223,00
G1011.2020R-2T8GX16		1	■	060	5950246[1]	148,00
G1011.2020R-3T12GX24		1	●	060	5476815	148,00
G1011.2020R-3T12GX24-P		1	●	060	7631266	223,00
G1011.2020R-3T15GX16-P		1	●	060	7107484[3]	223,00
G1011.2020R-3T21GX24		1	●	060	5476818	148,00
G1011.2020R-3T21GX24-P		1	●	060	6607601	223,00
G1011.2020R-3T33GX34-P		1	●	060	7337563	223,00
G1011.2020R-4T12GX24		1	●	060	5479770	148,00
G1011.2020R-4T12GX24-P		1	●	060	6827148	223,00
G1011.2020R-4T21GX24		1	●	060	5479772	148,00
G1011.2020R-4T21GX24-P		1	●	060	6827149	223,00
G1011.2020R-4T33GX34-P		1	●	060	7337567	223,00
G1011.2020R-5T12GX24		1	●	060	5479775	148,00
G1011.2020R-5T12GX24-P		1	●	060	6957491	223,00

Bezeichnung / Designation	Sorte / Grade	VE / US		Disc. Gr.	Article No.	EURO Stück / piece
G1011.2020R-5T21GX24		1	●	060	5479779	148,00
G1011.2020R-5T21GX24-P		1	●	060	6827185	223,00
G1011.2020R-6T12GX24		1	●	060	5479782	148,00
G1011.2020R-6T21GX24		1	●	060	5479785	148,00
G1011.20L-3T21GX24		1	●	060	6324393	190,00
G1011.20L-4T26GX24		1	●	060	6324484	190,00
G1011.20L-5T26GX24		1	●	060	6324486	190,00
G1011.20L-6T21GX24		1	●	060	6324488	190,00
G1011.20L-6T32GX24		1	●	060	6324567	190,00
G1011.20L-8T38GX30		1	●	060	6324571	190,00
G1011.20R-3T21GX24		1	●	060	6324394	190,00
G1011.20R-4T26GX24		1	●	060	6324485	190,00
G1011.20R-5T26GX24		1	●	060	6324487	190,00
G1011.20R-6T21GX24		1	●	060	6324565	190,00
G1011.20R-6T32GX24		1	●	060	6324568	190,00
G1011.20R-8T38GX30		1	●	060	6324573	190,00
G1011.24L-8T38GX30		1	●	060	6324574	249,00
G1011.24R-8T38GX30		1	●	060	6324576	249,00
G1011.2525L-2T15GX16		1	●	060	5950254[2]	159,00
G1011.2525L-2T21GX24-P		1	●	060	7631325	238,00
G1011.2525L-2T8GX16		1	●	060	5950253[2]	159,00
G1011.2525L-3T12GX24		1	●	060	5433155	159,00
G1011.2525L-3T12GX24-P		1	●	060	7631269	238,00
G1011.2525L-3T21GX24		1	●	060	5432982	159,00
G1011.2525L-3T21GX24-P		1	●	060	6607602	238,00
G1011.2525L-3T33GX34-P		1	●	060	7337564	238,00
G1011.2525L-4T12GX24		1	●	060	5436101	159,00
G1011.2525L-4T12GX24-P		1	●	060	6827180	238,00
G1011.2525L-4T21GX24		1	●	060	5436100	159,00
G1011.2525L-4T21GX24-P		1	●	060	6827181	238,00
G1011.2525L-4T32GX24		1	●	060	6530875	159,00
G1011.2525L-4T32GX24-P		1	●	060	6957468	238,00
G1011.2525L-4T33GX34-P		1	●	060	7337568	238,00
G1011.2525L-5T12GX24		1	●	060	5403289	159,00
G1011.2525L-5T12GX24-P		1	●	060	6957492	238,00
G1011.2525L-5T21GX24		1	●	060	5402431	159,00
G1011.2525L-5T21GX24-P		1	●	060	6827186	238,00
G1011.2525L-5T32GX24		1	●	060	5950271	159,00
G1011.2525L-5T32GX24-P		1	●	060	6957493	238,00
G1011.2525L-6T12GX24		1	●	060	5431140	159,00
G1011.2525L-6T12GX24-P		1	●	060	6957496	238,00
G1011.2525L-6T21GX24		1	●	060	5403625	159,00
G1011.2525L-6T21GX24-P		1	●	060	6827188	238,00
G1011.2525L-6T32GX24		1	●	060	5950273	159,00
G1011.2525L-6T32GX24-P		1	●	060	6827189	238,00
G1011.2525L-8T28GX30		1	●	060	6280563	159,00
G1011.2525L-8T28GX30-P		1	●	060	6957498	238,00
G1011.2525R-2T15GX16		1	●	060	5950252[2]	159,00
G1011.2525R-2T21GX24-P		1	●	060	7631326	238,00
G1011.2525R-2T8GX16		1	●	060	5950251[2]	159,00
G1011.2525R-3T12GX24		1	●	060	5433071	159,00
G1011.2525R-3T12GX24-P		1	●	060	7631268	238,00
G1011.2525R-3T21GX24		1	●	060	5432902	159,00
G1011.2525R-3T21GX24-P		1	●	060	6607603	238,00
G1011.2525R-3T33GX34-P		1	●	060	7337565	238,00
G1011.2525R-4T12GX24		1	●	060	5435948	159,00
G1011.2525R-4T12GX24-P		1	●	060	6827182	238,00
G1011.2525R-4T21GX24		1	●	060	5433589	159,00
G1011.2525R-4T21GX24-P		1	●	060	6827183	238,00
G1011.2525R-4T32GX24		1	●	060	6530876	159,00
G1011.2525R-4T32GX24-P		1	●	060	6957469	238,00
G1011.2525R-4T33GX34-P		1	●	060	7337569	238,00
G1011.2525R-5T12GX24		1	●	060	5403187	159,00
G1011.2525R-5T12GX24-P		1	●	060	6957494	238,00
G1011.2525R-5T21GX24		1	●	060	5401554	159,00
G1011.2525R-5T21GX24-P		1	●	060	6827187	238,00
G1011.2525R-5T32GX24		1	●	060	5950270	159,00
G1011.2525R-5T32GX24-P		1	●	060	6957495	238,00
G1011.2525R-6T12GX24		1	●	060	5431109	159,00
G1011.2525R-6T12GX24-P		1	●	060	6957497	238,00

Bezeichnung / Designation	Sorte / Grade	VE / US		Disc. Gr.	Article No.	EURO Stück / piece
G1011.2525R-6T21GX24		1	●	060	5403474	159,00
G1011.2525R-6T21GX24-P		1	●	060	6827190	238,00
G1011.2525R-6T32GX24		1	●	060	5950272	159,00
G1011.2525R-6T32GX24-P		1	●	060	6827191	238,00
G1011.2525R-8T28GX30		1	●	060	6280560	159,00
G1011.2525R-8T28GX30-P		1	●	060	6957499	238,00
G1011.3225L-8T28GX30-P		1	●	060	6957500	285,00
G1011.3225R-8T28GX30-P		1	●	060	6957501	285,00
G1011.3232L-8T28GX30		1	●	060	6280565	190,00
G1011.3232R-8T28GX30		1	●	060	6280564	190,00
G1041.26L-2T16GX16		1	■	060	5846149[1]	178,00
G1041.26L-2T16GX16-P		1	■	060	7102140[1]	267,00
G1041.26L-2T16GX16C-P		1	●	060	6958161[2]	267,00
G1041.26L-2T23GX24		1	●	060	6641600	178,00
G1041.26L-2T23GX24C		1	●	060	6641601	178,00
G1041.26L-3T16GX16		1	■	060	5846180[1]	178,00
G1041.26L-3T23GX24		1	●	060	5846181	178,00
G1041.26L-3T23GX24-P		1	●	060	7102142	267,00
G1041.26L-3T23GX24C		1	●	060	5915347	178,00
G1041.26L-3T23GX24C-P		1	●	060	7463263	267,00
G1041.26R-1.5T16GX16C		1	■	060	6090543[1]	178,00
G1041.26R-2T16GX16		1	●	060	5846141[2]	178,00
G1041.26R-2T16GX16-P		1	■	060	7102141[1]	267,00
G1041.26R-2T23GX24		1	●	060	6641604	178,00
G1041.26R-2T23GX24C		1	●	060	6641605	178,00
G1041.26R-3T23GX24		1	●	060	5846144	178,00
G1041.26R-3T23GX24-P		1	●	060	7102143	267,00
G1041.26R-3T23GX24C		1	●	060	5915349	178,00
G1041.26R-3T23GX24C-P		1	●	060	7463262	267,00
G1041.32L-2T23GX24C-P		1	●	060	6958163	289,00
G1041.32L-2T32GX24		1	●	060	6641610	193,00
G1041.32L-2T32GX24C		1	●	060	6641611	193,00
G1041.32L-3T23GX24		1	●	060	5846183	193,00
G1041.32L-3T23GX24-P		1	●	060	7102144	289,00
G1041.32L-3T23GX24C		1	●	060	5915461	193,00
G1041.32L-3T23GX24C-P		1	●	060	6958165	289,00
G1041.32L-3T32GX24		1	●	060	5846184	193,00
G1041.32L-3T32GX24-P		1	●	060	7102146	289,00
G1041.32L-3T32GX24C		1	●	060	5915462	193,00
G1041.32L-3T32GX24C-P		1	●	060	6958167	289,00
G1041.32L-3T33GX34-P		1	●	060	7333984	289,00
G1041.32L-3T33GX34C-P		1	●	060	7333982	289,00
G1041.32L-4T32GX24		1	●	060	5846185	193,00
G1041.32L-4T32GX24-P		1	●	060	7102148	289,00
G1041.32L-4T32GX24C		1	●	060	5915463	193,00
G1041.32L-4T32GX24C-P		1	●	060	6958169	289,00
G1041.32R-2T23GX24C-P		1	●	060	6958164	289,00
G1041.32R-2T32GX24		1	●	060	6641614	193,00
G1041.32R-2T32GX24C		1	●	060	6641615	193,00
G1041.32R-3T23GX24		1	●	060	5846146	193,00
G1041.32R-3T23GX24-P		1	●	060	7102145	289,00
G1041.32R-3T23GX24C		1	●	060	5915465	193,00
G1041.32R-3T23GX24C-P		1	●	060	6958166	289,00
G1041.32R-3T32GX24		1	●	060	5846147	193,00
G1041.32R-3T32GX24-P		1	●	060	7102147	289,00
G1041.32R-3T32GX24C		1	●	060	5915466	193,00
G1041.32R-3T32GX24C-P		1	●	060	6958168	289,00
G1041.32R-3T33GX34-P		1	●	060	7333985	289,00
G1041.32R-3T33GX34C-P		1	●	060	7333983	289,00
G1041.32R-4T32GX24		1	●	060	5846148	193,00
G1041.32R-4T32GX24-P		1	●	060	7102149	289,00
G1041.32R-4T32GX24C		1	●	060	5915467	193,00
G1041.32R-4T32GX24C-P		1	●	060	6958180	289,00
G1041.32R-4T33GX34-P		1	●	060	7333989	289,00
G1041.32R-4T33GX34C-P		1	●	060	7333987	289,00
G1042.26N-2T40GX24		1	●	060	6641616	114,00
G1042.26N-3T40GX24		1	●	060	5913350	114,00
G1042.26N-4T40GX24		1	●	060	5917925	114,00
G1042.32N-2T50GX24		1	●	060	6641617	125,00
G1042.32N-3T50GX24		1	●	060	5887898	125,00

Bezeichnung / Designation	Sorte / Grade	VE / US		Disc. Gr.	Article No.	EURO Stück / piece
G1042.32N-4T50GX24		1	●	060	5887899	125,00
G1042.32N-5T60GX24		1	●	060	5887960	125,00
G1042.32N-6T60GX24		1	●	060	5887961	125,00
G1111.16L-3T12-034GX24		1	●	060	5936210	173,00
G1111.16L-3T12-042GX24		1	●	060	5936212	173,00
G1111.16L-3T19-054GX24		1	●	060	5936214	173,00
G1111.16L-3T22-067GX24		1	●	060	5936216	173,00
G1111.16L-3T22-090GX24		1	●	060	5936218	173,00
G1111.16L-3T22-130GX24		1	●	060	5936240	173,00
G1111.16L-4T20-040GX24		1	●	060	5936243	173,00
G1111.16L-4T20-052GX24		1	●	060	5936246	173,00
G1111.16L-4T25-064GX24		1	●	060	5936320	173,00
G1111.16L-4T25-092GX24		1	●	060	5936322	173,00
G1111.16L-4T25-132GX24		1	●	060	5936324	173,00
G1111.16L-4T25-220GX24		1	●	060	5936326	173,00
G1111.16L-6T20-040GX24		1	●	060	5936339	173,00
G1111.16L-6T25-058GX24		1	●	060	5936340	173,00
G1111.16L-6T25-088GX24		1	●	060	5936341	173,00
G1111.16L-6T25-168GX24		1	●	060	5936342	173,00
G1111.16R-3T12-034GX24		1	●	060	5936211	173,00
G1111.16R-3T12-042GX24		1	●	060	5936213	173,00
G1111.16R-3T19-054GX24		1	●	060	5936215	173,00
G1111.16R-3T22-067GX24		1	●	060	5936217	173,00
G1111.16R-3T22-090GX24		1	●	060	5936219	173,00
G1111.16R-3T22-130GX24		1	●	060	5936241	173,00
G1111.16R-4T20-040GX24		1	●	060	5936244	173,00
G1111.16R-4T20-052GX24		1	●	060	5936247	173,00
G1111.16R-4T25-064GX24		1	●	060	5936321	173,00
G1111.16R-4T25-092GX24		1	●	060	5936323	173,00
G1111.16R-4T25-132GX24		1	●	060	5936325	173,00
G1111.16R-4T25-220GX24		1	●	060	5936327	173,00
G1111.16R-6T20-040GX24		1	●	060	5936343	173,00
G1111.16R-6T25-058GX24		1	●	060	5936344	173,00
G1111.16R-6T25-088GX24		1	●	060	5936345	173,00
G1111.16R-6T25-168GX24		1	●	060	5936346	173,00
G1111.2525L-3T12-034GX24		1	●	060	5936036	173,00
G1111.2525L-3T12-042GX24		1	●	060	5936080	173,00
G1111.2525L-3T12-054GX24		1	●	060	5936082	173,00
G1111.2525L-3T12-067GX24		1	●	060	5936083	173,00
G1111.2525L-3T12-090GX24		1	●	060	5936084	173,00
G1111.2525L-3T12-130GX24		1	●	060	5936085	173,00
G1111.2525L-3T19-054GX24		1	●	060	5950291	173,00
G1111.2525L-3T22-067GX24		1	●	060	5950292	173,00
G1111.2525L-3T22-090GX24		1	●	060	5950293	173,00
G1111.2525L-3T22-130GX24		1	●	060	5950295	173,00
G1111.2525L-4T12-040GX24		1	●	060	5936086	173,00
G1111.2525L-4T12-052GX24		1	●	060	5936087	173,00
G1111.2525L-4T12-064GX24		1	●	060	5936088	173,00
G1111.2525L-4T12-092GX24		1	●	060	5936089	173,00
G1111.2525L-4T12-132GX24		1	●	060	5936110	173,00
G1111.2525L-4T12-220GX24		1	●	060	5936111	173,00
G1111.2525L-4T20-040GX24		1	●	060	5950298	173,00
G1111.2525L-4T20-052GX24		1	●	060	5950299	173,00
G1111.2525L-4T25-064GX24		1	●	060	5950330	173,00
G1111.2525L-4T25-092GX24		1	●	060	5950331	173,00
G1111.2525L-4T25-132GX24		1	●	060	5950332	173,00
G1111.2525L-4T25-220GX24		1	●	060	5950333	173,00
G1111.2525L-5T12-040GX24		1	●	060	5936112	173,00
G1111.2525L-5T12-060GX24		1	●	060	5936113	173,00
G1111.2525L-5T12-085GX24		1	●	060	5936114	173,00
G1111.2525L-5T12-120GX24		1	●	060	5936115	173,00
G1111.2525L-5T12-175GX24		1	●	060	5936116	173,00
G1111.2525L-5T20-040GX24		1	●	060	5950334	173,00
G1111.2525L-5T20-060GX24		1	●	060	5950336	173,00
G1111.2525L-5T25-085GX24		1	●	060	5950337	173,00
G1111.2525L-5T25-120GX24		1	●	060	5950338	173,00
G1111.2525L-5T25-175GX24		1	●	060	5950339	173,00
G1111.2525L-5T33060GX24P		1	●	060	8206413	259,00
G1111.2525L-5T33085GX24P		1	●	060	8206418	259,00
G1111.2525L-5T33120GX24P		1	●	060	8206460	259,00

Bezeichnung / Designation	Sorte / Grade	VE / US		Disc. Gr.	Article No.	EURO Stück / piece
G1111.2525L-5T33175GX24P		1	●	060	8206415	**259,00**
G1111.2525L-6T12-040GX24		1	●	060	5936118	**173,00**
G1111.2525L-6T12-058GX24		1	●	060	5930300	**173,00**
G1111.2525L-6T12-088GX24		1	●	060	5936119	**173,00**
G1111.2525L-6T12-168GX24		1	●	060	5936130	**173,00**
G1111.2525L-6T20-040GX24		1	●	060	5950347	**173,00**
G1111.2525L-6T25-058GX24		1	●	060	5950348	**173,00**
G1111.2525L-6T25-088GX24		1	●	060	5950349	**173,00**
G1111.2525L-6T25-168GX24		1	●	060	5950350	**173,00**
G1111.2525R-3T12-034GX24		1	●	060	5936150	**173,00**
G1111.2525R-3T12-042GX24		1	●	060	5936151	**173,00**
G1111.2525R-3T12-054GX24		1	●	060	5936152	**173,00**
G1111.2525R-3T12-067GX24		1	●	060	5936153	**173,00**
G1111.2525R-3T12-090GX24		1	●	060	5936155	**173,00**
G1111.2525R-3T12-130GX24		1	●	060	5936156	**173,00**
G1111.2525R-3T19-054GX24		1	●	060	5950351	**173,00**
G1111.2525R-3T22-067GX24		1	●	060	5950352	**173,00**
G1111.2525R-3T22-090GX24		1	●	060	5950354	**173,00**
G1111.2525R-3T22-130GX24		1	●	060	5950355	**173,00**
G1111.2525R-4T12-040GX24		1	●	060	5936157	**173,00**
G1111.2525R-4T12-052GX24		1	●	060	5936158	**173,00**
G1111.2525R-4T12-064GX24		1	●	060	5936159	**173,00**
G1111.2525R-4T12-092GX24		1	●	060	5936170	**173,00**
G1111.2525R-4T12-132GX24		1	●	060	5936171	**173,00**
G1111.2525R-4T12-220GX24		1	●	060	5936172	**173,00**
G1111.2525R-4T20-040GX24		1	●	060	5950356	**173,00**
G1111.2525R-4T20-052GX24		1	●	060	5950357	**173,00**
G1111.2525R-4T25-064GX24		1	●	060	5950358	**173,00**
G1111.2525R-4T25-092GX24		1	●	060	5950359	**173,00**
G1111.2525R-4T25-132GX24		1	●	060	5950360	**173,00**
G1111.2525R-4T25-220GX24		1	●	060	5950361	**173,00**
G1111.2525R-5T12-040GX24		1	●	060	5936173	**173,00**
G1111.2525R-5T12-060GX24		1	●	060	5936174	**173,00**
G1111.2525R-5T12-085GX24		1	●	060	5936175	**173,00**
G1111.2525R-5T12-120GX24		1	●	060	5936176	**173,00**
G1111.2525R-5T12-175GX24		1	●	060	5936177	**173,00**
G1111.2525R-5T20-040GX24		1	●	060	5950362	**173,00**
G1111.2525R-5T20-060GX24		1	●	060	5950363	**173,00**
G1111.2525R-5T25-085GX24		1	●	060	5950364	**173,00**
G1111.2525R-5T25-120GX24		1	●	060	5950366	**173,00**
G1111.2525R-5T25-175GX24		1	●	060	5950367	**173,00**
G1111.2525R-5T33060GX24P		1	●	060	8206414	**259,00**
G1111.2525R-5T33085GX24P		1	●	060	8206417	**259,00**
G1111.2525R-5T33120GX24P		1	●	060	8206419	**259,00**
G1111.2525R-5T33175GX24P		1	●	060	8206416	**259,00**
G1111.2525R-6T12-040GX24		1	●	060	5936178	**173,00**
G1111.2525R-6T12-058GX24		1	●	060	5936179	**173,00**
G1111.2525R-6T12-088GX24		1	●	060	5936183	**173,00**
G1111.2525R-6T12-168GX24		1	●	060	5936185	**173,00**
G1111.2525R-6T20-040GX24		1	●	060	5950368	**173,00**
G1111.2525R-6T25-058GX24		1	●	060	5950369	**173,00**
G1111.2525R-6T25-088GX24		1	●	060	5950371	**173,00**
G1111.2525R-6T25-168GX24		1	●	060	5950372	**173,00**
G1221-16QL-2T04-GX09-P		1	●	060	7106114	**219,00**
G1221-16QR-2T04-GX09-P		1	●	060	7106113	**219,00**
G1221-20QL-2T06-GX09-P		1	●	060	7106116	**250,00**
G1221-20QL-3T06-GX09-P		1	●	060	7106118	**250,00**
G1221-20QR-2T06-GX09-P		1	●	060	7106115	**250,00**
G1221-20QR-3T06-GX09-P		1	●	060	7106117	**250,00**
G1221-25RL-2T08-GX16-P		1	■	060	7106130[1]	**311,00**
G1221-25RL-3T08-GX16-P		1	■	060	7106132[1]	**311,00**
G1221-25RR-2T08-GX16-P		1	●	060	7106119[2]	**311,00**
G1221-25RR-3T08-GX16-P		1	●	060	7106131[2]	**311,00**
G1221-32SL-3T10-GX16-P		1	■	060	7106134[1]	**372,00**
G1221-32SL-4T10-GX16-P		1	■	060	7106136[1]	**372,00**
G1221-32SR-3T10-GX16-P		1	■	060	7106133[1]	**372,00**
G1221-32SR-4T10-GX16-P		1	■	060	7106135[1]	**372,00**
G1221-40TL-3T12-GX24-P		1	●	060	7543683	**435,00**
G1221-40TL-4T12-GX24-P		1	●	060	7543684	**435,00**
G1221-40TL-5T12-GX24-P		1	●	060	7543685	**435,00**

Bezeichnung / Designation	Sorte / Grade	VE / US		Disc. Gr.	Article No.	EURO Stück / piece
G1221-40TR-3T12-GX24-P		1	●	060	7543680	**435,00**
G1221-40TR-4T12-GX24-P		1	●	060	7543681	**435,00**
G1221-40TR-5T12-GX24-P		1	●	060	7543682	**435,00**
G1221.10QL-2T04-GX09-P		1	●	060	7106204	**219,00**
G1221.10QR-2T04-GX09-P		1	●	060	7106203	**219,00**
G1221.12QL-2T06-GX09-P		1	●	060	7106206	**250,00**
G1221.12QL-3T06-GX09-P		1	●	060	7106208	**250,00**
G1221.12QR-2T06-GX09-P		1	●	060	7106205	**250,00**
G1221.12QR-3T06-GX09-P		1	●	060	7106207	**250,00**
G1221.16RR-2T08-GX16-P		1	■	060	7106209[1]	**311,00**
G1221.16RR-3T08-GX16-P		1	■	060	7106211[1]	**311,00**
G1221.20SR-3T10-GX16-P		1	■	060	7106213[1]	**372,00**
G1221.20SR-4T10-GX16-P		1	■	060	7106215[1]	**372,00**
G1221.24TL-4T12-GX24-P		1	●	060	7544254	**435,00**
G1221.24TL-5T12-GX24-P		1	●	060	7544255	**435,00**
G1221.24TR-4T12-GX24-P		1	●	060	7544252	**435,00**
G1221.24TR-5T12-GX24-P		1	●	060	7544253	**435,00**
G1332.IMR-GAD3N-GX24		1	●	060	6102125	**104,00**
G1511.12L-T6GX24		1	●	060	6062038	**148,00**
G1511.12R-T6GX24		1	●	060	6062037	**148,00**
G1511.1616L-T6GX24-P		1	●	060	6957503	**194,00**
G1511.1616R-T6GX24-P		1	●	060	6957505	**194,00**
G1511.16L-T6GX24		1	●	060	6062092	**159,00**
G1511.16L-T6GX24-P		1	●	060	6955293	**238,00**
G1511.16R-T6GX24		1	●	060	6062091	**159,00**
G1511.16R-T6GX24-P		1	●	060	6955291	**238,00**
G1511.2020L-T6GX24		1	●	060	6024431	**148,00**
G1511.2020L-T6GX24-P		1	●	060	6957507	**223,00**
G1511.2020R-T6GX24		1	●	060	6017306	**148,00**
G1511.2020R-T6GX24-P		1	●	060	6957509	**223,00**
G1511.2525L-T6GX24		1	●	060	6021730	**159,00**
G1511.2525L-T6GX24-P		1	●	060	6957511	**238,00**
G1511.2525R-T6GX24		1	●	060	6021207	**159,00**
G1511.2525R-T6GX24-P		1	●	060	6957513	**238,00**
G1521.12R-T6GX24		1	●	060	6062443	**148,00**
G1521.16L-T6GX24		1	●	060	6062446	**159,00**
G1521.16R-T6GX24		1	●	060	6062447	**159,00**
G1521.2020L-T6GX24		1	●	060	6011513	**148,00**
G1521.2020R-T6GX24		1	●	060	6024454	**148,00**
G1521.2525L-T6GX24		1	●	060	6021221	**159,00**
G1521.2525R-T6GX24		1	●	060	6021959	**159,00**
G1551.12R-T6GX24		1	●	060	6062484	**148,00**
G1551.16L-T6GX24		1	●	060	6062485	**159,00**
G1551.16R-T6GX24		1	●	060	6062486	**159,00**
G1551.2020L-T6GX24		1	●	060	6016993	**148,00**
G1551.2020R-T6GX24		1	●	060	6022311	**148,00**
G1551.2525L-T6GX24		1	●	060	6021223	**159,00**
G1551.2525R-T6GX24		1	●	060	6022110	**159,00**
G1634-33L-2T21GX24-P		1	●	060	7960223	**156,00**
G1634-33L-3T21GX24-P		1	●	060	7960224	**156,00**
G1634-33R-2T21GX24-P		1	●	060	7961566	**156,00**
G1634-43L-3T27GX34-P		1	●	060	7960225	**172,00**
G1634-43L-3T33GX34-P		1	●	060	7960226	**172,00**
G1634-43L-4T33GX34-P		1	●	060	7960227	**172,00**
G1634-43R-3T27GX34-P		1	●	060	7960228	**172,00**
G1634-43R-3T33GX34-P		1	●	060	7960229	**172,00**
G2012.08L-2T16SX-P		1	●	060	6526507	**185,00**
G2012.08R-2T16SX-P		1	●	060	6526509	**185,00**
G2012.10L-2T16SX-P		1	●	060	6526511	**194,00**
G2012.10L-3T16SX-P		1	●	060	6526512	**194,00**
G2012.10R-2T16SX-P		1	●	060	6526513	**194,00**
G2012.10R-3T16SX-P		1	●	060	6526514	**194,00**
G2012.1212L-2T16SX-P		1	●	060	6526433	**185,00**
G2012.1212L-3T16SX-P		1	●	060	6526434	**185,00**
G2012.1212R-2T16SX-P		1	●	060	6526435	**185,00**
G2012.1212R-3T16SX-P		1	●	060	6526436	**185,00**
G2012.12L-1.5T15SX		1	■	060	6837935[1]	**148,00**
G2012.12L-2T20SX-P		1	●	060	6526515	**223,00**
G2012.12L-3T22SX-P		1	●	060	6424510	**223,00**
G2012.12L-3T33SX-P		1	●	060	6837937	**223,00**

Bezeichnung / Designation	Sorte / Grade	VE / US		Disc. Gr.	Article No.	EURO Stück / piece
G2012.12L-4T29SX-P		1	●	060	6424512	223,00
G2012.12R-1.5T15SX		1	●	060	6837936	148,00
G2012.12R-2T20SX-P		1	●	060	6526516	223,00
G2012.12R-3T22SX-P		1	●	060	6424511	223,00
G2012.12R-3T33SX-P		1	●	060	6837938	223,00
G2012.12R-4T29SX-P		1	●	060	6424513	223,00
G2012.1616L-2T16SX-P		1	●	060	6526437	194,00
G2012.1616L-3T16SX-P		1	●	060	6526438	194,00
G2012.1616L-3T26SX-P		1	●	060	6830208	194,00
G2012.1616R-2T16SX-P		1	●	060	6526439	194,00
G2012.1616R-3T16SX-P		1	●	060	6526490	194,00
G2012.1616R-3T26SX-P		1	●	060	6830209	194,00
G2012.16L-2T26SX		1	●	060	7100194	159,00
G2012.16L-3T33SX		1	●	060	7100192	159,00
G2012.16L-3T33SX-P		1	●	060	6424515	238,00
G2012.16L-4T33SX-P		1	●	060	6424516	238,00
G2012.16L-5T40SX-P		1	●	060	6526520	238,00
G2012.16L-6T40SX-P		1	●	060	6526521	238,00
G2012.16R-2T26SX		1	●	060	7100195	159,00
G2012.16R-3T33SX		1	●	060	7100193	159,00
G2012.16R-3T33SX-P		1	●	060	6424517	238,00
G2012.16R-4T33SX-P		1	●	060	6424519	238,00
G2012.16R-5T40SX-P		1	●	060	6526524	238,00
G2012.16R-6T40SX-P		1	●	060	6526525	238,00
G2012.2020L-1.5T15SX		1	●	060	6530851	148,00
G2012.2020L-2T20SX-P		1	●	060	6526491	223,00
G2012.2020L-3T22SX-P		1	●	060	6406611	223,00
G2012.2020L-3T33SX-P		1	●	060	6830210	223,00
G2012.2020L-4T33SX-P		1	●	060	6424337	223,00
G2012.2020R-1.5T15SX		1	●	060	6530852	148,00
G2012.2020R-2T20SX-P		1	●	060	6526492	223,00
G2012.2020R-3T22SX-P		1	●	060	6424335	223,00
G2012.2020R-3T33SX-P		1	●	060	6830211	223,00
G2012.2020R-4T33SX-P		1	●	060	6424338	223,00
G2012.2525L-2T26SX		1	●	060	7100117	159,00
G2012.2525L-3T33SX		1	●	060	7100115	159,00
G2012.2525L-3T33SX-P		1	●	060	6406612	238,00
G2012.2525L-4T33SX-P		1	●	060	6406613	238,00
G2012.2525L-5T40SX-P		1	●	060	6526496	238,00
G2012.2525L-6T40SX-P		1	●	060	6526497	238,00
G2012.2525R-2T26SX		1	●	060	7100118	159,00
G2012.2525R-3T33SX		1	●	060	7100116	159,00
G2012.2525R-3T33SX-P		1	●	060	6406614	238,00
G2012.2525R-4T33SX-P		1	●	060	6424339	238,00
G2012.2525R-5T40SX-P		1	●	060	6526500	238,00
G2012.2525R-6T40SX-P		1	●	060	6526501	238,00
G2016-2525N-12T40UX-P		1	●	060	7789312	238,00
G2016-3232N-19T40UX-P		1	●	060	7789313	285,00
G2042.26L-1.5T20SX		1	●	060	6408749	178,00
G2042.26L-2T26SX		1	●	060	6424574	178,00
G2042.26L-2T26SX-C-P		1	●	060	6641574	267,00
G2042.26L-3T33SX		1	●	060	6424575	178,00
G2042.26L-3T33SX-C-P		1	●	060	6641575	267,00
G2042.26L-3T33SX-P		1	●	060	6961701	267,00
G2042.26N-2T30SX		1	●	060	6424576	113,00
G2042.26N-3T38SX		1	●	060	6424577	113,00
G2042.26N-3T38SX-P		1	●	060	6830200	169,00
G2042.26N-4T40SX		1	●	060	6424578	113,00
G2042.26R-1.5T20SX		1	●	060	6424579	178,00
G2042.26R-2T26SX		1	●	060	6424600	178,00
G2042.26R-2T26SX-C-P		1	●	060	6641572	267,00
G2042.26R-3T33SX		1	●	060	6424601	178,00
G2042.26R-3T33SX-C-P		1	●	060	6641573	267,00
G2042.26R-3T33SX-P		1	●	060	6961702	267,00
G2042.32L-1.5T20SX		1	●	060	6424605	193,00
G2042.32L-2T26SX		1	●	060	6424606	193,00
G2042.32L-2T26SX-C-P		1	●	060	6641576	289,00
G2042.32L-2T26SX-P		1	●	060	6961703	289,00
G2042.32L-3T33SX		1	●	060	6424607	193,00
G2042.32L-3T33SX-C-P		1	●	060	6641577	289,00

Bezeichnung / Designation	Sorte / Grade	VE / US		Disc. Gr.	Article No.	EURO Stück / piece
G2042.32L-3T33SX-P		1	●	060	6961704	289,00
G2042.32L-4T33SX		1	●	060	6408748	193,00
G2042.32L-4T33SX-C		1	●	060	6530218	193,00
G2042.32L-4T33SX-C-P		1	●	060	6641580	289,00
G2042.32L-4T33SX-P		1	●	060	7100114	289,00
G2042.32N-2T30SX		1	●	060	6424608	125,00
G2042.32N-3T45SX-P		1	●	060	6830202	187,00
G2042.32N-3T50SX		1	●	060	6408745	125,00
G2042.32N-4T50SX		1	●	060	6424620	125,00
G2042.32N-4T50SX-P		1	●	060	6830203	187,00
G2042.32N-5T60SX		1	●	060	6424621	125,00
G2042.32N-5T60SX-P		1	●	060	6830204	187,00
G2042.32N-6T60SX		1	●	060	6408746	125,00
G2042.32N-6T60SX-P		1	●	060	6830205	187,00
G2042.32R-1.5T20SX		1	●	060	6424622	193,00
G2042.32R-2T26SX		1	●	060	6424639	193,00
G2042.32R-2T26SX-C-P		1	●	060	6641578	289,00
G2042.32R-2T26SX-P		1	●	060	6961705	289,00
G2042.32R-3T33SX		1	●	060	6424660	193,00
G2042.32R-3T33SX-C-P		1	●	060	6641579	289,00
G2042.32R-3T33SX-P		1	●	060	6961706	289,00
G2042.32R-4T33SX		1	●	060	6424661	193,00
G2042.32R-4T33SX-C		1	●	060	6530231	193,00
G2042.32R-4T33SX-C-P		1	●	060	6641581	289,00
G2042.32R-4T33SX-P		1	●	060	7100113	289,00
G2042.46N-5T80SX		1	●	060	6424663	212,00
G2042.46N-6T80SX		1	●	060	6424664	212,00
G2042.52N-10T100SX-P		1	●	060	6830206	319,00
G2042.52N-8T100SX-P		1	●	060	6830207	319,00
G2612-2525L-3T25SX		1	■	060	6964973[1]	267,00
G2612-2525L-4T35SX		1	■	060	6964975[1]	267,00
G2612-2525R-3T25SX		1	■	060	6964979[1]	267,00
G2612-2525R-3T35SX		1	■	060	6964980[1]	267,00
G2612-2525R-4T35SX		1	■	060	6964981[1]	267,00
G2612-3225L-8T45SX		1	■	060	6965012[1]	272,00
G2612-3225R-4T45SX		1	■	060	6965014[1]	272,00
G2612-3225R-8T45SX		1	■	060	6965017[1]	272,00
G2612-C4R-2T20SX		1	●	065	6964990[2]	474,00
G2612-C4R-3T25SX		1	■	065	6964991[1]	474,00
G2612-C4R-4T35SX		1	■	065	6964993[1]	474,00
G2612-C5L-3T25SX		1	●	065	6964997[2]	512,00
G2612-C5R-3T35SX		1	●	065	6965004[2]	512,00
G2612-C6L-3T45SX		1	●	065	6965019[2]	575,00
G2612-C6L-6T45SX		1	■	065	6965025[1]	575,00
G2612-C6L-8T45SX		1	●	065	6965026[2]	575,00
G2612-C6R-3T45SX		1	■	065	6965028[1]	575,00
G2612.12R-3T20SX		1	■	060	6965052[1]	267,00
G2622-C5L-4T35SX		1	■	065	6964840[1]	512,00
G2622-C6L-6T45SX		1	■	065	6964872[1]	575,00
G2632-E20L-2T20SX		1	●	060	6830467	107,00
G2632-E20L-3T20SX		1	●	060	6830468	107,00
G2632-E20L-4T20SX		1	●	060	6830469	107,00
G2632-E20R-2T20SX		1	●	060	6830500	107,00
G2632-E20R-3T20SX		1	●	060	6830501	107,00
G2632-E20R-4T20SX		1	●	060	6830502	107,00
G2632-E25L-2T20SX		1	●	060	6830503	107,00
G2632-E25L-3T25SX		1	●	060	6930854	107,00
G2632-E25L-3T35SX		1	●	060	6830504	107,00
G2632-E25L-4T35SX		1	●	060	6830505	107,00
G2632-E25L-5T35SX		1	●	060	6830506	107,00
G2632-E25L-6T35SX		1	●	060	6830507	107,00
G2632-E25R-2T20SX		1	●	060	6830508	107,00
G2632-E25R-3T25SX		1	●	060	6930855	107,00
G2632-E25R-3T35SX		1	●	060	6830509	107,00
G2632-E25R-4T35SX		1	●	060	6830510	107,00
G2632-E25R-5T35SX		1	●	060	6830511	107,00
G2632-E25R-6T35SX		1	●	060	6830512	107,00
G2632-E32L-3T45SX		1	●	060	6830513	107,00
G2632-E32L-4T45SX		1	●	060	6830514	107,00
G2632-E32L-5T45SX		1	●	060	6830515	107,00

Bezeichnung / Designation	Sorte / Grade	VE / US		Disc. Gr.	Article No.	EURO Stück / piece
G2632-E32L-6T45SX		1	●	060	6830516	107,00
G2632-E32N-8T45SX		1	●	060	6830517	107,00
G2632-E32R-3T45SX		1	●	060	6830518	107,00
G2632-E32R-4T45SX		1	●	060	6830519	107,00
G2632-E32R-5T45SX		1	●	060	6830520	107,00
G2632-E32R-6T45SX		1	●	060	6830521	107,00
G2661-1616N-26-P		1	●	060	6830269	307,00
G2661-2020N-26-P		1	●	060	6687195	324,00
G2661-2020N-32-P		1	●	060	6687196	324,00
G2661-2525N-32-P		1	●	060	6687197	341,00
G2661-3225N-32-P		1	●	060	6687198	358,00
G2661-3225N-52-P		1	●	060	6830460	580,00
G2661-4032N-52-P		1	●	060	6830461	614,00
G2661.12N-26-P		1	●	060	6687224	324,00
G2661.12N-32-P		1	●	060	6687225	324,00
G2661.16N-26-P		1	●	060	7100190	341,00
G2661.16N-32-P		1	●	060	6687226	341,00
G2661.20N-32-P		1	●	060	6687227	358,00
G2661.20N-52-P		1	●	060	6830262	580,00
G2661.24N-52-P		1	●	060	6830263	614,00
G3011-1010L-MX22-2		1	●	060	7479419	123,00
G3011-1010R-MX22-2		1	●	060	7479418	123,00
G3011-1212L-MX22-2		1	●	060	7479511	123,00
G3011-1212L-MX22-2-P		1	●	060	7338051	185,00
G3011-1212R-MX22-2		1	●	060	7479510	123,00
G3011-1212R-MX22-2-P		1	●	060	7338050	185,00
G3011-1616L-MX22-2		1	●	060	8167142	129,00
G3011-1616L-MX22-2-P		1	●	060	7108218	194,00
G3011-1616L-MX22-4-P		1	●	060	7108334	194,00
G3011-1616R-MX22-2		1	●	060	8167141	129,00
G3011-1616R-MX22-2-P		1	●	060	7108217	194,00
G3011-1616R-MX22-4-P		1	●	060	7108333	194,00
G3011-2020L-MX22-2		1	●	060	8167140	148,00
G3011-2020L-MX22-2-P		1	●	060	7108330	223,00
G3011-2020L-MX22-4-P		1	●	060	7108336	223,00
G3011-2020R-MX22-2		1	●	060	8167089	148,00
G3011-2020R-MX22-2-P		1	●	060	7108219	223,00
G3011-2020R-MX22-4-P		1	●	060	7108335	223,00
G3011-2525L-MX22-2		1	●	060	8167088	159,00
G3011-2525L-MX22-2-P		1	●	060	7108332	238,00
G3011-2525L-MX22-4-P		1	●	060	7108338	238,00
G3011-2525R-MX22-2		1	●	060	8167087	159,00
G3011-2525R-MX22-2-P		1	●	060	7108331	238,00
G3011-2525R-MX22-4-P		1	●	060	7108337	238,00
G3011-C3L-MX22-2-P		1	●	065	7619434	421,00
G3011-C3R-MX22-2-P		1	●	065	7619433	421,00
G3011-C4L-MX22-2-P		1	●	065	7619436	421,00
G3011-C4L-MX22-4-P		1	●	065	7619442	421,00
G3011-C4R-MX22-2-P		1	●	065	7619435	421,00
G3011-C4R-MX22-4-P		1	●	065	7619441	421,00
G3011-C5L-MX22-2-P		1	●	065	7619438	468,00
G3011-C5L-MX22-4-P		1	●	065	7619444	468,00
G3011-C5R-MX22-2-P		1	●	065	7619437	468,00
G3011-C5R-MX22-4-P		1	●	065	7619443	468,00
G3011-C6L-MX22-2-P		1	●	065	7619440	537,00
G3011-C6L-MX22-4-P		1	●	065	7619446	537,00
G3011-C6R-MX22-2-P		1	●	065	7619439	537,00
G3011-C6R-MX22-4-P		1	●	065	7619445	537,00
G3011.08L-MX22-2-P		1	●	060	7797748	185,00
G3011.08R-MX22-2-P		1	●	060	7797747	185,00
G3011.10L-MX22-2-P		1	●	060	7797800	194,00
G3011.10R-MX22-2-P		1	●	060	7797749	194,00
G3011.12L-MX22-2-P		1	●	060	7109172	223,00
G3011.12L-MX22-4-P		1	●	060	7109176	223,00
G3011.12R-MX22-2-P		1	●	060	7109171	223,00
G3011.12R-MX22-4-P		1	●	060	7109175	223,00
G3011.16L-MX22-2-P		1	●	060	7109174	238,00
G3011.16L-MX22-4-P		1	●	060	7109178	238,00
G3011.16R-MX22-2-P		1	●	060	7109173	238,00
G3011.16R-MX22-4-P		1	●	060	7109177	238,00

Bezeichnung / Designation	Sorte / Grade	VE / US		Disc. Gr.	Article No.	EURO Stück / piece
G3021-2020L-MX22-2-P		1	●	060	7109126	223,00
G3021-2020R-MX22-2-P		1	●	060	7109125	223,00
G3021-2525L-MX22-2-P		1	●	060	7109128	238,00
G3021-2525L-MX22-4-P		1	●	060	7109130	238,00
G3021-2525R-MX22-2-P		1	●	060	7109127	238,00
G3021-2525R-MX22-4-P		1	●	060	7109129	238,00
G3021.16L-MX22-2-P		1	●	060	7109152	238,00
G3021.16L-MX22-4-P		1	●	060	7109154	238,00
G3021.16R-MX22-2-P		1	●	060	7109151	238,00
G3021.16R-MX22-4-P		1	●	060	7109153	238,00
G3051-1212L-MX22-2-P		1	●	060	7797723	185,00
G3051-1212R-MX22-2-P		1	●	060	7797722	185,00
G3051-1616L-MX22-2-P		1	●	060	7797725	194,00
G3051-1616R-MX22-2-P		1	●	060	7797724	194,00
G3051-2020L-MX22-2-P		1	●	060	7797727	223,00
G3051-2020R-MX22-2-P		1	●	060	7797726	223,00
G3051-2525L-MX22-2-P		1	●	060	7797729	238,00
G3051-2525R-MX22-2-P		1	●	060	7797728	238,00
G3051.10L-MX22-2-P		1	●	060	7797802	194,00
G3051.10R-MX22-2-P		1	●	060	7797801	194,00
G3051.12L-MX22-2-P		1	●	060	7797804	223,00
G3051.12R-MX22-2-P		1	●	060	7797803	223,00
G3051.16L-MX22-2-P		1	●	060	7797806	238,00
G3051.16R-MX22-2-P		1	●	060	7797805	238,00
G3221-32SL-MX22-2-P		1	●	060	8167145	372,00
G3221-32SR-MX22-2-P		1	●	060	8167144	372,00
G4011-1616R-3T10DX18		1	●	060	8344388	129,00
G4011-1616R-4T10DX18		1	●	060	8344387	129,00
G4011-2020L-2T10DX18		1	●	060	8143029	148,00
G4011-2020L-3T10DX18		1	●	060	8064259	148,00
G4011-2020L-4T10DX18		1	●	060	8064350	148,00
G4011-2020L-4T17DX18		1	●	060	8064351	148,00
G4011-2020L-4T17DX18-P		1	●	060	8064352	223,00
G4011-2020R-2T10DX18		1	●	060	8143080	148,00
G4011-2020R-3T10DX18		1	●	060	8064353	148,00
G4011-2020R-4T10DX18		1	●	060	8064354	148,00
G4011-2020R-4T17DX18		1	●	060	8064355	148,00
G4011-2020R-4T17DX18-P		1	●	060	8064356	223,00
G4011-2525L-2.5T17DX18		1	●	060	7921475	159,00
G4011-2525L-2.5T17DX18-P		1	●	060	7921545	238,00
G4011-2525L-2T10DX18		1	●	060	7921476	159,00
G4011-2525L-2T17DX18		1	●	060	7921477	159,00
G4011-2525L-2T17DX18-P		1	●	060	7921546	238,00
G4011-2525L-3T10DX18		1	●	060	7921478	159,00
G4011-2525L-3T17DX18		1	●	060	7921479	159,00
G4011-2525L-3T17DX18-P		1	●	060	7921547	238,00
G4011-2525L-4T10DX18		1	●	060	8064357	159,00
G4011-2525L-4T17DX18		1	●	060	8064358	159,00
G4011-2525L-4T17DX18-P		1	●	060	8064359	238,00
G4011-2525R-2.5T17DX18		1	●	060	7921540	159,00
G4011-2525R-2.5T17DX18-P		1	●	060	7921548	238,00
G4011-2525R-2T10DX18		1	●	060	7921541	159,00
G4011-2525R-2T17DX18		1	●	060	7921542	159,00
G4011-2525R-2T17DX18-P		1	●	060	7921549	238,00
G4011-2525R-3T10DX18		1	●	060	7921543	159,00
G4011-2525R-3T17DX18		1	●	060	7921544	159,00
G4011-2525R-3T17DX18-P		1	●	060	7921550	238,00
G4011-2525R-4T10DX18		1	●	060	8064360	159,00
G4011-2525R-4T17DX18		1	●	060	8064361	159,00
G4011-2525R-4T17DX18-P		1	●	060	8064362	238,00
G4011-C3L-2T17DX18-P		1	●	065	7957669	463,00
G4011-C3R-2T17DX18-P		1	●	065	7957670	463,00
G4011-C4L-2T17DX18-P		1	●	065	7957671	463,00
G4011-C4R-2T17DX18-P		1	●	065	7957672	463,00
G4011.12L-4T17DX18		1	●	060	8064363	148,00
G4011.12R-2T10DX18		1	●	060	8143088	148,00
G4011.12R-4T17DX18		1	●	060	8064364	148,00
G4011.16L-2T10DX18		1	●	060	7921516	159,00
G4011.16L-2T17DX18-P		1	●	060	7921632	238,00
G4011.16L-3T10DX18		1	●	060	7921517	159,00

Bezeichnung / Designation	Sorte / Grade	VE / US		Disc. Gr.	Article No.	EURO Stück / piece
G4011.16L-3T17DX18		1	●	060	7921518	159,00
G4011.16L-3T17DX18-P		1	●	060	7921633	238,00
G4011.16L-4T17DX18		1	●	060	8064365	159,00
G4011.16R-2T10DX18		1	●	060	7921519	159,00
G4011.16R-2T17DX18-P		1	●	060	7921634	238,00
G4011.16R-3T10DX18		1	●	060	7921630	159,00
G4011.16R-3T17DX18		1	●	060	7921631	159,00
G4011.16R-3T17DX18-P		1	●	060	7921635	238,00
G4011.16R-4T17DX18		1	●	060	8064366	159,00
G4014-1010L-1.5T10DX18		1	●	060	7796033	136,00
G4014-1010L-1T12DX18		1	●	060	8120856	136,00
G4014-1010L-2T10DX18		1	●	060	7796035	136,00
G4014-1010R-1.5T10DX18		1	●	060	7796034	136,00
G4014-1010R-1T12DX18		1	●	060	8120857	136,00
G4014-1010R-2T10DX18		1	●	060	7796036	136,00
G4014-1212L-1.5T12DX18		1	●	060	7796037	136,00
G4014-1212L-1T12DX18		1	●	060	8120858	136,00
G4014-1212L-2.5T12DX18-P		1	●	060	7796051	203,00
G4014-1212L-2T12DX18		1	●	060	7796038	136,00
G4014-1212L-2T12DX18-P		1	●	060	7796050	203,00
G4014-1212L-3T12DX18		1	●	060	8070693	136,00
G4014-1212L-3T12DX18-P		1	●	060	7796052	203,00
G4014-1212R-1.5T12DX18		1	●	060	7796045	136,00
G4014-1212R-1T12DX18		1	●	060	8120859	136,00
G4014-1212R-2.5T12DX18-P		1	●	060	7796058	203,00
G4014-1212R-2T12DX18		1	●	060	7796044	136,00
G4014-1212R-2T12DX18-P		1	●	060	7796057	203,00
G4014-1212R-3T12DX18		1	●	060	8070694	136,00
G4014-1212R-3T12DX18-P		1	●	060	7796059	203,00
G4014-1616L-1.5T12DX18		1	●	060	7796039	142,00
G4014-1616L-2.5T17DX18-P		1	●	060	7796055	214,00
G4014-1616L-2T12DX18		1	●	060	7796040	142,00
G4014-1616L-2T12DX18-P		1	●	060	7796053	214,00
G4014-1616L-2T17DX18		1	●	060	8187495	154,00
G4014-1616L-2T17DX18-P		1	●	060	7796054	214,00
G4014-1616L-3T17DX18		1	●	060	7796041	142,00
G4014-1616L-3T17DX18-P		1	●	060	7796056	214,00
G4014-1616R-1.5T12DX18		1	●	060	7796046	142,00
G4014-1616R-2.5T17DX18-P		1	●	060	7796062	214,00
G4014-1616R-2T12DX18		1	●	060	7796047	142,00
G4014-1616R-2T12DX18-P		1	●	060	7796060	214,00
G4014-1616R-2T17DX18		1	●	060	8187496	154,00
G4014-1616R-2T17DX18-P		1	●	060	7796061	214,00
G4014-1616R-3T17DX18		1	●	060	7796048	142,00
G4014-1616R-3T17DX18-P		1	●	060	7796063	214,00
G4014-2020L-2T17DX18		1	●	060	8120890	163,00
G4014-2020L-2T17DX18-P		1	●	060	7796064	245,00
G4014-2020L-3T17DX18		1	●	060	7796042	163,00
G4014-2020L-3T17DX18-P		1	●	060	7796066	245,00
G4014-2020R-2T17DX18		1	●	060	8120891	163,00
G4014-2020R-2T17DX18-P		1	●	060	7796065	245,00
G4014-2020R-3T17DX18		1	●	060	7796043	163,00
G4014-2020R-3T17DX18-P		1	●	060	7796067	245,00
G4014.08L-1.5T12DX18		1	●	060	7796069	136,00
G4014.08L-2T12DX18-P		1	●	060	7796121	203,00
G4014.08L-3T12DX18-P		1	●	060	7796122	203,00
G4014.08R-1.5T12DX18		1	●	060	7796120	136,00
G4014.08R-2T12DX18-P		1	●	060	7796125	203,00
G4014.08R-3T12DX18-P		1	●	060	7796126	203,00
G4014.10L-2T17DX18-P		1	●	060	7796123	214,00
G4014.10L-3T17DX18		1	●	060	8120854	142,00
G4014.10L-3T17DX18-P		1	●	060	7796124	214,00
G4014.10R-2T17DX18-P		1	●	060	7796127	214,00
G4014.10R-3T17DX18-P		1	●	060	7796128	214,00
G4014.12L-2T17DX18-P		1	●	060	7921653	214,00
G4014.12L-3T17DX18-P		1	●	060	7921654	214,00
G4014.12R-2T17DX18-P		1	●	060	7921655	214,00
G4014.12R-3T17DX18-P		1	●	060	7921656	214,00
G4041-26L-1.5T17DX18		1	●	060	7921554	178,00
G4041-26L-1.5T17DX18C		1	●	060	7921590	178,00

Bezeichnung / Designation	Sorte / Grade	VE / US		Disc. Gr.	Article No.	EURO Stück / piece
G4041-26L-2T17DX18		1	●	060	7921555	178,00
G4041-26L-2T17DX18-P		1	●	060	7921598	267,00
G4041-26L-2T17DX18C		1	●	060	7921591	178,00
G4041-26L-2T17DX18C-P		1	●	060	7921596	267,00
G4041-26L-3T17DX18		1	●	060	7921556	178,00
G4041-26L-3T17DX18-P		1	●	060	8120892	267,00
G4041-26L-3T17DX18C		1	●	060	7921592	178,00
G4041-26L-3T17DX18C-P		1	●	060	8120893	267,00
G4041-26R-1.5T17DX18		1	●	060	7921557	178,00
G4041-26R-1.5T17DX18C		1	●	060	7921593	178,00
G4041-26R-2T17DX18		1	●	060	7921558	178,00
G4041-26R-2T17DX18-P		1	●	060	7921599	267,00
G4041-26R-2T17DX18C		1	●	060	7921594	178,00
G4041-26R-2T17DX18C-P		1	●	060	7921597	267,00
G4041-26R-3T17DX18		1	●	060	7921559	178,00
G4041-26R-3T17DX18-P		1	●	060	8120894	267,00
G4041-26R-3T17DX18C		1	●	060	7921595	178,00
G4041-26R-3T17DX18C-P		1	●	060	8120895	267,00
G4041-32L-2T21DX18-P		1	●	060	7921603	289,00
G4041-32L-2T21DX18C		1	●	060	7921601	193,00
G4041-32L-2T21DX18C-P		1	●	060	8125908	289,00
G4041-32L-3T21DX18C-P		1	●	060	8126030	289,00
G4041-32R-2T21DX18		1	●	060	7921600	193,00
G4041-32R-2T21DX18C		1	●	060	7921602	193,00
G4041-32R-2T21DX18C-P		1	●	060	8125907	289,00
G4041-32R-3T21DX18C-P		1	●	060	8125909	289,00
G4042-26N-1.5T17DX18		1	●	060	8120896	114,00
G4042-26N-2T25DX18		1	●	060	8120898	114,00
G4042-26N-3T40DX18		1	●	060	8120899	114,00
G4042-26N-3T40DX18-P		1	●	060	8120900	169,00
G4042-26N-4T40DX18		1	●	060	8120901	114,00
G4042-32N-1.5T17DX18		1	●	060	8120902	114,00
G4042-32N-2T25DX18		1	●	060	8120904	114,00
G4042-32N-3T40DX18		1	●	060	8120905	125,00
G4042-32N-3T40DX18-P		1	●	060	8120906	187,00
G4042-32N-4T40DX18		1	●	060	8120907	125,00
G4221-25RL-2T08-DX18-P		1	●	060	8120944	311,00
G4221-25RL-3T08-DX18-P		1	●	060	8120946	311,00
G4221-25RR-2T08-DX18-P		1	●	060	8120943	311,00
G4221-25RR-3T08-DX18-P		1	●	060	8120945	311,00
G4221-32SL-3T10-DX18-P		1	●	060	8120948	372,00
G4221-32SL-4T10-DX18-P		1	●	060	8120950	372,00
G4221-32SR-3T10-DX18-P		1	●	060	8120947	372,00
G4221-32SR-4T10-DX18-P		1	●	060	8120949	372,00
G4221-Q32L-3T12DX18-P		1	●	060	8064381	475,00
G4221-Q32L-4T12DX18-P		1	●	060	8064383	475,00
G4221-Q32R-3T12DX18-P		1	●	060	8064382	475,00
G4221-Q32R-4T12DX18-P		1	●	060	8064384	475,00
G4221-Q40L-3T12DX18-P		1	●	060	8064385	500,00
G4221-Q40L-4T12DX18-P		1	●	060	8064387	500,00
G4221-Q40R-3T12DX18-P		1	●	060	8064386	500,00
G4221-Q40R-4T12DX18-P		1	●	060	8064388	500,00
G4221-Q50L-3T12DX18-P		1	●	060	8064389	525,00
G4221-Q50L-4T21DX18-P		1	●	060	8064391	525,00
G4221-Q50R-3T12DX18-P		1	●	060	8064390	525,00
G4221-Q50R-4T21DX18-P		1	●	060	8064392	525,00
G4221.16RR-2T08-DX18-P		1	●	060	8120953	311,00
G4221.16RR-3T08-DX18-P		1	●	060	8120954	311,00
G4221.20SR-3T10-DX18-P		1	●	060	8120955	372,00
G4221.20SR-4T10-DX18-P		1	●	060	8120956	372,00
G4511-1212R-T5DX18		1	●	060	8143081	148,00
G4511-1616R-T5DX18		1	●	060	8143082	148,00
G4511-2020L-T5DX18		1	●	060	8120909	148,00
G4511-2020R-T5DX18		1	●	060	8120920	148,00
G4511-2525L-T5DX18		1	●	060	8120921	159,00
G4511-2525R-T5DX18		1	●	060	8120922	159,00
G4521-2020L-T5DX18		1	●	060	8120923	148,00
G4521-2020R-T5DX18		1	●	060	8120924	148,00
G4521-2525L-T5DX18		1	●	060	8120925	159,00
G4521-2525R-T5DX18		1	●	060	8120926	159,00

Bezeichnung / Designation	Sorte / Grade	VE / US		Disc. Gr.	Article No.	EURO Stück / piece
G4551-2020R-T5DX18		1	●	060	8143083	159,00
G4551-2525L-T5DX18		1	●	060	8120927	159,00
G4551-2525R-T5DX18		1	●	060	8120928	159,00
G4634-33L-2T13DX18-P		1	●	060	7960221	156,00
G4634-33L-2T16DX18-P		1	●	060	8038918	156,00
G4634-33L-3T16DX18-P		1	●	060	8038919	156,00
G4635-30N-1.5T10DX18		1	●	060	8120940	104,00
G4635-30N-2T17DX18		1	●	060	8120941	104,00
G4635-30N-3T17DX18		1	●	060	8120942	104,00
G4635-33L-2.5T16DX18-P		1	●	060	8345250	156,00
G4635-33L-2T16DX18-P		1	●	060	8344389	156,00
GL0001		1	●	095	7621448	37,10
GL0002		1	●	095	7621449	37,10
GL0003		1	●	095	7621580	37,10
GL0004		1	●	095	7621581	37,10
GL0005		1	●	095	7621582	37,10
GL0006		1	●	095	7621583	37,10
GL0007		1	●	095	7621584	37,10
GL0008		1	●	095	7621585	37,10
GL0009		1	●	095	7621586	39,50
GL0010		1	●	095	7621587	39,50
GL0011		1	●	095	7621588	39,50
GL0012		1	●	095	7621589	39,50
GL0013		1	●	095	7621590	39,50
GL0014		1	●	095	7621591	39,50
GL0015		1	●	095	7621592	41,80
GL0016		1	●	095	7621593	41,80
GL0017		1	●	095	7621594	41,80
GL0018		1	●	095	7621595	41,80
GL0019		1	●	095	7621596	41,80
GL0020		1	●	095	7621597	41,80
GL0021		1	●	095	7621598	41,80
GL0022		1	●	095	7621599	41,80
GL0023		1	●	095	7621600	49,20
GL0024		1	●	095	7621601	49,20
GL0025		1	●	095	7621602	49,20
GL0026		1	●	095	7621603	49,20
GL0027		1	●	095	7621604	49,20
GL0028		1	●	095	7621605	49,20
GL0029		1	●	095	7621606	49,20
GL0030		1	●	095	7621607	49,20
GX09-0E170N01-UF8	WSM23S	10	●	020	7319495	28,00
GX09-0E196N01-UF8	WSM23S	10	●	020	7319496	28,00
GX09-1E100L00-GD8	WSM23S	10	●	020	7350848	28,00
GX09-1E100R00-GD8	WSM23S	10	●	020	7350849	28,00
GX09-1E120L00-GD8	WSM23S	10	●	020	7350900	28,00
GX09-1E120R00-GD8	WSM23S	10	●	020	7350901	28,00
GX09-1E140L00-GD8	WSM23S	10	●	020	7350902	28,00
GX09-1E140R00-GD8	WSM23S	10	●	020	7350903	28,00
GX09-1E200N02-GD3	WKP23S	10	●	020	6529682	21,50
GX09-1E200N02-GD3	WSM33S	10	●	020	6152586	21,50
GX09-1E200N02-GD3	WSM43S	10	■	020	6152587*	21,50
GX09-1E200N02-UF4	WSM33S	10	●	020	6152231	21,50
GX09-1E200N02-UF4	WSM43S	10	●	020	6152236	21,50
GX09-1E200N10-RF8	WSM23S	10	●	020	7046054	28,00
GX09-1E225N01-UF8	WSM23S	10	●	020	7319497	28,00
GX09-1E250N02-GD3	WKP23S	10	■	020	6529683*	21,50
GX09-1E250N02-GD3	WSM33S	10	●	020	6152643	21,50
GX09-1E250N02-GD3	WSM43S	10	■	020	6152644*	21,50
GX09-1E275N01-UF8	WSM23S	10	●	020	7319498	28,00
GX09-2E300N03-GD3	WKP23S	10	●	020	6529684	21,50
GX09-2E300N03-GD3	WSM33S	10	●	020	6152683	21,50
GX09-2E300N03-GD3	WSM43S	10	■	020	6152684*	21,50
GX09-2E300N03-UF4	WSM33S	10	●	020	6152238	21,50
GX09-2E300N03-UF4	WSM43S	10	●	020	6152254	21,50
GX09-2E325N01-UF8	WSM23S	10	●	020	7319499	28,00
GX16-0E150N01-CF6	WSM33S	10	●	020	6087815	30,20
GX16-0E150R10-CF6	WSM33S	10	●	020	6168053	30,20
GX16-0E160N01-UF8	WSM23S	10	●	020	6955180	30,20
GX16-0E170N01-UF8	WSM23S	10	●	020	6955181	30,20

Bezeichnung / Designation	Sorte / Grade	VE / US		Disc. Gr.	Article No.	EURO Stück / piece
GX16-0E185N01-UF8	WSM23S	10	●	020	6955182	30,20
GX16-1E200N02-CE4	WSM23S	10	●	020	6738343	23,19
GX16-1E200N02-CE4	WSM33S	10	●	020	6092194	23,19
GX16-1E200N02-CE4	WSM43S	10	●	020	6092195	23,19
GX16-1E200N02-CF5	WSM23S	10	●	020	6738338	23,19
GX16-1E200N02-CF5	WSM33S	10	●	020	6090536	23,19
GX16-1E200N02-CF5	WSM43S	10	●	020	6090538	23,19
GX16-1E200N02-CF6	WSM33S	10	●	020	6089839	23,19
GX16-1E200N02-CF6	WSM43S	10	●	020	6089960	23,19
GX16-1E200N02-CK8	WK1	10	●	020	7178820	22,62
GX16-1E200N02-GD3	WKP23S	10	●	020	6529686	23,19
GX16-1E200N02-GD3	WSM33S	10	●	020	6152686	23,19
GX16-1E200N02-GD3	WSM43S	10	■	020	6152687*	23,19
GX16-1E200N02-GD6	WSM23S	10	●	020	6167136	23,19
GX16-1E200N02-GD6	WSM33S	10	●	020	6167137	23,19
GX16-1E200N02-UA4	WKP13S	10	●	020	6529730	23,19
GX16-1E200N02-UD4	WKP23S	10	●	020	6529338	23,19
GX16-1E200N02-UD4	WSM33S	10	●	020	6529339	23,19
GX16-1E200N02-UD6	WSM33S	10	●	020	6167474	23,19
GX16-1E200N02-UF4	WKP23S	10	●	020	6529415	23,19
GX16-1E200N02-UF4	WSM23S	10	●	020	6738331	23,19
GX16-1E200N02-UF4	WSM33S	10	●	020	6152256	23,19
GX16-1E200N02-UF4	WSM43S	10	●	020	6152257	23,19
GX16-1E200N02-UF8	WSM23S	10	●	020	6955183	30,20
GX16-1E200N020-CE4	WSM33	10	●	020	5689613	23,19
GX16-1E200N020-CF5	WSM33	10	●	020	5382292	23,19
GX16-1E200N020-CF6	WSM33	10	●	020	5332012	23,19
GX16-1E200N020-UF4	WSM33	10	●	020	5511626	23,19
GX16-1E200N020-UF4	WSP43	10	●	020	5511627	23,19
GX16-1E200N10-RD4	WKP23S	10	●	020	6529721	23,19
GX16-1E200N10-RD4	WSM23S	10	●	020	6171948	23,19
GX16-1E200N10-RD4	WSM33S	10	●	020	6171941	23,19
GX16-1E200N10-RF8	WSM13S	10	●	020	6774758	30,20
GX16-1E200N10-RF8	WSM23S	10	●	020	6774759	30,20
GX16-1E200R15-CF5	WSM33S	10	●	020	6194899	25,50
GX16-1E200R15-CF6	WSM33S	10	●	020	6194920	25,50
GX16-1E200R6-CE4	WSM33S	10	●	020	6087350	23,19
GX16-1E200R6-CF5	WSM33S	10	●	020	6092003	23,19
GX16-1E200R6-CF5	WSM43S	10	●	020	6092004	23,19
GX16-1E200R6-CF6	WSM33S	10	●	020	6090176	23,19
GX16-1E200R7-CF5	WSM33S	10	●	020	6194817	25,50
GX16-1E225N01-UF8	WSM23S	10	●	020	6955184	30,20
GX16-1E239N02-UF4	WSM33S	10	●	020	6388423	23,19
GX16-1E239N12-RD4	WSM33S	10	●	020	6171949	23,19
GX16-1E239N12-RF8	WSM23S	10	●	020	5009915	30,20
GX16-1E250N02-CE4	WSM33S	10	●	020	6092196	23,19
GX16-1E250N02-CE4	WSM43S	10	●	020	6092197	23,19
GX16-1E250N02-CF5	WSM33S	10	●	020	6090539	23,19
GX16-1E250N02-CF5	WSM43S	10	●	020	6090580	23,19
GX16-1E250N02-CF6	WSM33S	10	●	020	6089961	23,19
GX16-1E250N02-GD3	WKP23S	10	●	020	6529687	23,19
GX16-1E250N02-UF4	WKP23S	10	●	020	6529416	23,19
GX16-1E250N02-UF4	WSM33S	10	●	020	6152258	23,19
GX16-1E250R6-CE4	WSM33S	10	●	020	6092348	23,19
GX16-1E250R6-CF5	WSM33S	10	●	020	6092005	23,19
GX16-1E250R6-CF6	WSM33S	10	●	020	6090178	23,19
GX16-1E275N01-UF8	WSM23S	10	●	020	6955185	30,20
GX16-1E3.30N	WMG40	10	●	020	5839977	16,98
GX16-1F200N02FS-F1	WDN10	1	●	025	7629595	147,00
GX16-1F200N10FS-M1	WDN10	1	●	025	7629622	147,00
GX16-2E100L00-GD8	WSM23S	10	●	020	7350904	30,20
GX16-2E100R00-GD8	WSM23S	10	●	020	7350905	30,20
GX16-2E120L00-GD8	WSM23S	10	●	020	7350906	30,20
GX16-2E120R00-GD8	WSM23S	10	●	020	7350907	30,20
GX16-2E140L00-GD8	WSM23S	10	●	020	7350908	30,20
GX16-2E140R00-GD8	WSM23S	10	●	020	7350909	30,20
GX16-2E300L6-CE4	WSM33S	10	●	020	6092479	23,19
GX16-2E300N02-CE4	WSM23S	10	●	020	6738344	23,19
GX16-2E300N02-CE4	WSM33S	10	●	020	6092198	23,19
GX16-2E300N02-CE4	WSM43S	10	■	020	6092199*	23,19

Bezeichnung / Designation	Sorte / Grade	VE / US		Disc. Gr.	Article No.	EURO Stück / piece
GX16-2E300N02-CF5	WSM23S	10	●	020	6738339	23,19
GX16-2E300N02-CF5	WSM33S	10	●	020	6090581	23,19
GX16-2E300N02-CF5	WSM43S	10	●	020	6090582	23,19
GX16-2E300N02-CF6	WSM33S	10	●	020	6089963	23,19
GX16-2E300N02-CF6	WSM43S	10	●	020	6089964	23,19
GX16-2E300N02-CK8	WK1	10	●	020	7178821	22,62
GX16-2E300N02-UF8	WSM23S	10	●	020	6955186	30,20
GX16-2E300N020-CF6	WSM33	10	●	020	5332014	23,19
GX16-2E300N03-GD3	WKP23S	10	●	020	6529688	23,19
GX16-2E300N03-GD3	WSM33S	10	●	020	6152727	23,19
GX16-2E300N03-GD6	WSM33S	10	●	020	6167293	23,19
GX16-2E300N03-UA4	WKP13S	10	●	020	6529732	23,19
GX16-2E300N03-UA4	WKP33S	10	●	020	6529731	23,19
GX16-2E300N03-UD4	WKP23S	10	●	020	6529390	23,19
GX16-2E300N03-UD4	WSM33S	10	●	020	6529391	23,19
GX16-2E300N03-UD6	WSM33S	10	●	020	6167479	23,19
GX16-2E300N03-UF4	WKP23S	10	●	020	6529417	23,19
GX16-2E300N03-UF4	WSM23S	10	●	020	6738333	23,19
GX16-2E300N03-UF4	WSM33S	10	●	020	6152354	23,19
GX16-2E300N03-UF4	WSM43S	10	●	020	6152356	23,19
GX16-2E300N030-UF4	WSM33	10	●	020	5378927	23,19
GX16-2E300N15-RD4	WSM23S	10	●	020	6570770	23,19
GX16-2E300N15-RD4	WSM33S	10	●	020	6570771	23,19
GX16-2E300N15-RF8	WSM13S	10	●	020	6570773	30,20
GX16-2E300N15-RF8	WSM23S	10	●	020	6570772	30,20
GX16-2E300R15-CF5	WSM33S	10	●	020	6193142	25,50
GX16-2E300R15-CF6	WSM33S	10	●	020	6193147	25,50
GX16-2E300R6-CE4	WSM33S	10	●	020	6092470	23,19
GX16-2E300R6-CF5	WSM33S	10	●	020	6092007	23,19
GX16-2E300R6-CF6	WSM33	10	●	020	5541411	23,19
GX16-2E300R6-CF6	WSM33S	10	●	020	6090241	23,19
GX16-2E318N02-UF8	WSM23S	10	●	020	6955187	30,20
GX16-2E325N01-UF8	WSM23S	10	●	020	6955188	30,20
GX16-2E4.30N	WMG40	10	●	020	5149618	16,98
GX16-3E400N04-GD3	WKP23S	10	●	020	6529689	25,50
GX16-3E400N04-GD3	WSM33S	10	●	020	6152729	25,50
GX16-3E400N04-GD6	WSM23S	10	●	020	6167297	25,50
GX16-3E400N04-UA4	WKP13S	10	●	020	6529734	25,50
GX16-3E400N04-UA4	WKP33S	10	●	020	6529733	25,50
GX16-3E400N04-UD4	WKP23S	10	●	020	6529392	25,50
GX16-3E400N04-UD4	WSM33S	10	●	020	6529393	25,50
GX16-3E400N04-UF4	WKP23S	10	●	020	6529418	25,50
GX16-3E400N04-UF4	WSM33S	10	●	020	6152357	25,50
GX16-3E400N04-UF8	WSM23S	10	●	020	6955189	33,20
GX16-3E400N20-RF8	WSM23S	10	●	020	7046055	33,20
GX16-3E425N02-UF8	WSM23S	10	●	020	7319512	33,20
GX16-3E500N04-GD6	WSM33S	10	●	020	6167370[1]	27,80
GX16-3E500N04-UD4	WSM33S	10	●	020	6529395[1]	27,80
GX16-3E500N04-UD6	WSM33S	10	●	020	6167483	27,80
GX16-3E500N25-RF8	WSM23S	10	●	020	7046056[1]	36,20
GX16-3E6.30N	WMG40	10	●	020	5149619	20,37
GX16-4E600N05-UA4	WKP13S	10	●	020	6529738[1]	30,20
GX16-4E8.30N	WMG40	10	●	020	5149620	22,05
GX24-1E200N02-CE4	WSM23S	10	●	020	6738345	24,90
GX24-1E200N02-CE4	WSM33S	10	●	020	6641646	24,90
GX24-1E200N02-CE4	WSM43S	10	●	020	6641647	24,90
GX24-1E200N02-CF5	WSM23S	10	●	020	6738340	24,90
GX24-1E200N02-CF5	WSM33S	10	●	020	6641649	24,90
GX24-1E200N02-CF5	WSM43S	10	●	020	6641650	24,90
GX24-1E200N02-CF6	WSM33S	10	●	020	6641651	24,90
GX24-1E239N02-UF8	WSM23S	10	●	020	6955190	32,40
GX24-1E250N02-CE4	WKP23S	10	●	020	6641643	24,90
GX24-1E250N02-CE4	WSM33S	10	●	020	6580716	24,90
GX24-1E250N02-CF5	WSM33S	10	●	020	6641644	24,90
GX24-2E280L02-VG7	WSM23S	10	●	020	8060800	24,90
GX24-2E280R02-VG7	WSM23S	10	●	020	7319546	24,90
GX24-2E280R02-VG7	WSM33S	10	●	020	7319545	24,90
GX24-2E280R04-VG7	WSM23S	10	●	020	7319544	24,90
GX24-2E280R04-VG7	WSM33S	10	●	020	7319543	24,90
GX24-2E300L6-CE4	WKP23S	10	●	020	6529715	24,90

Bezeichnung / Designation	Sorte / Grade	VE / US		Disc. Gr.	Article No.	EURO Stück / piece
GX24-2E300L6-CE4	WSM33S	10	●	020	6092511	24,90
GX24-2E300L6-CE4	WSM43S	10	●	020	6092512	24,90
GX24-2E300L6-CF5	WSM33S	10	●	020	6092060	24,90
GX24-2E300L6-CF5	WSM43S	10	■	020	6092062[2]	24,90
GX24-2E300L6-CF6	WSM33S	10	●	020	6090343	24,90
GX24-2E300N00-CF5	WSM33S	10	●	020	6641655	27,40
GX24-2E300N02-CE4	WKP23S	10	●	020	6529716	24,90
GX24-2E300N02-CE4	WSM23S	10	●	020	6738346	24,90
GX24-2E300N02-CE4	WSM33S	10	●	020	6092250	24,90
GX24-2E300N02-CE4	WSM43S	10	●	020	6092251	24,90
GX24-2E300N02-CF5	WSM23S	10	●	020	6738341	24,90
GX24-2E300N02-CF5	WSM33S	10	●	020	6090583	24,90
GX24-2E300N02-CF5	WSM43S	10	●	020	6090584	24,90
GX24-2E300N02-CF6	WSM33S	10	●	020	6089965	24,90
GX24-2E300N02-CF6	WSM43S	10	●	020	6089966	24,90
GX24-2E300N02-CK8	WK1	10	●	020	7178822	18,70
GX24-2E300N02-UF4	WSM33S	10	●	020	8060588	24,90
GX24-2E300N02-UF8	WSM23S	10	●	020	6955192	32,40
GX24-2E300N020-CE4	WPP23	10	●	020	5612587	24,90
GX24-2E300N020-CE4	WSM33	10	●	020	5612586	24,90
GX24-2E300N020-CF5	WSM33	10	●	020	5573942	24,90
GX24-2E300N020-CF6	WSM33	10	●	020	5849233	24,90
GX24-2E300N03-GD3	WKP23S	10	●	020	6529711	24,90
GX24-2E300N03-GD3	WSM33S	10	●	020	6153383	24,90
GX24-2E300N03-GD3	WSM43S	10	●	020	6153385	24,90
GX24-2E300N03-GD6	WSM23S	10	●	020	6167373	24,90
GX24-2E300N03-GD6	WSM33S	10	●	020	6167374	24,90
GX24-2E300N03-UA4	WKP13S	10	●	020	6529740	24,90
GX24-2E300N03-UA4	WKP33S	10	●	020	6529739	24,90
GX24-2E300N03-UD4	WKP13S	10	●	020	6529470	24,90
GX24-2E300N03-UD4	WKP23S	10	●	020	6529450	24,90
GX24-2E300N03-UD4	WKP33S	10	●	020	6529614	24,90
GX24-2E300N03-UD4	WSM33S	10	●	020	6193803	24,90
GX24-2E300N03-UD6	WSM23S	10	●	020	6167486	24,90
GX24-2E300N03-UD6	WSM33S	10	●	020	6167487	24,90
GX24-2E300N03-UF4	WKP23S	10	●	020	6529441	24,90
GX24-2E300N03-UF4	WSM23S	10	●	020	6738334	24,90
GX24-2E300N03-UF4	WSM33S	10	●	020	6152445	24,90
GX24-2E300N03-UF4	WSM43S	10	●	020	6152448	24,90
GX24-2E300N030-GD3	WSM33	10	●	020	5665751	24,90
GX24-2E300N030-UF4	WSM33	10	●	020	5512425	24,90
GX24-2E300N04-UF8	WSM23S	10	●	020	6955193	32,40
GX24-2E300N15-RD4	WKP23S	10	●	020	6529722	24,90
GX24-2E300N15-RD4	WSM33S	10	●	020	6153444	24,90
GX24-2E300N15-RF7	WSM13S	10	●	020	7934757	24,90
GX24-2E300N15-RF7	WSM23S	10	●	020	7934770	24,90
GX24-2E300N15-RF8	WSM13S	10	●	020	6166537	32,40
GX24-2E300N15-RF8	WSM23S	10	●	020	6166538	32,40
GX24-2E300R6-CE4	WKP23S	10	●	020	6529717	24,90
GX24-2E300R6-CE4	WSM33S	10	●	020	6092472	24,90
GX24-2E300R6-CE4	WSM43S	10	●	020	6092473	24,90
GX24-2E300R6-CF5	WSM33S	10	●	020	6092009	24,90
GX24-2E300R6-CF5	WSM43S	10	●	020	6092040	24,90
GX24-2E300R6-CF6	WSM33S	10	●	020	6090243	24,90
GX24-2E300R6-CF6	WSM43S	10	■	020	6090244[2]	24,90
GX24-2E318N02-UF8	WSM23S	10	●	020	6955194	32,40
GX24-2E318N03-UD4	WKP23S	10	●	020	6529451	24,90
GX24-2E318N03-UF4	WKP23S	10	●	020	6619187	24,90
GX24-2E318N03-UF4	WSM33S	10	●	020	6118733	24,90
GX24-2E318N03-UF4	WSM43S	10	●	020	6403596	24,90
GX24-2E318N16-RD4	WKP23S	10	●	020	6529723	24,90
GX24-2E318N16-RD4	WSM33S	10	●	020	6118453	24,90
GX24-2E318N16-RF8	WSM23S	10	●	020	6913874	32,40
GX24-2E4.80N	WMG40	10	●	020	5149621	18,70
GX24-2F300N02-CE4	WSM33S	10	●	020	6092285	16,67
GX24-2F300N02-CE4	WSM43S	10	●	020	6092344	16,67
GX24-2F300N02-CF5	WSM33S	10	●	020	6091960	16,67
GX24-2F300N02-CF5	WSM43S	10	●	020	6091962	16,67
GX24-2F300N02-CF6	WSM33S	10	●	020	6090053	16,67
GX24-2F300N02EM-1	WBS10	1	●	023	7823883	109,00

Bezeichnung / Designation	Sorte / Grade	VE / US		Disc. Gr.	Article No.	EURO Stück / piece
GX24-2F300N02FS-F1	WDN10	1	●	025	7629596	162,00
GX24-2F300N02TM-1	WBH20	1	●	023	7823875	109,00
GX24-2F300N03-UF4	WSM33S	10	●	020	8060584	16,67
GX24-2F300N15-RF7	WSM13S	10	●	020	7934754	16,67
GX24-2F300N15EM-1	WBS10	1	●	023	7823887	109,00
GX24-2F300N15FS-M1	WDN10	1	●	025	7629623	162,00
GX24-2F300N15TM-1	WBH20	1	●	023	7823879	109,00
GX24-3E400L6-CE4	WSM33S	10	●	020	6092513	27,40
GX24-3E400L6-CF5	WSM33S	10	●	020	6092063	27,40
GX24-3E400N02-CF5	WSM23S	10	●	020	6738342	27,40
GX24-3E400N02-CF5	WSM33S	10	●	020	6091912	27,40
GX24-3E400N02-CF5	WSM43S	10	●	020	6091913	27,40
GX24-3E400N02-CK8	WK1	10	●	020	7178823	26,70
GX24-3E400N02-UF4	WSM33S	10	●	020	8060589	27,40
GX24-3E400N02-UF8	WSM23S	10	●	020	7123837	35,60
GX24-3E400N03-CE4	WKP23S	10	●	020	6529718	27,40
GX24-3E400N03-CE4	WSM23S	10	●	020	6738347	27,40
GX24-3E400N03-CE4	WSM33S	10	●	020	6092252	27,40
GX24-3E400N03-CE4	WSM43S	10	●	020	6092253	27,40
GX24-3E400N04-GD3	WKP23S	10	●	020	6529712	27,40
GX24-3E400N04-GD3	WSM33S	10	●	020	6153387	27,40
GX24-3E400N04-GD3	WSM43S	10	●	020	6153388	27,40
GX24-3E400N04-GD6	WSM23S	10	●	020	6167375	27,40
GX24-3E400N04-GD6	WSM33S	10	●	020	6167376	27,40
GX24-3E400N04-UA4	WKP13S	10	●	020	6529742	27,40
GX24-3E400N04-UA4	WKP33S	10	●	020	6529741	27,40
GX24-3E400N04-UD4	WKP13S	10	●	020	6529471	27,40
GX24-3E400N04-UD4	WKP23S	10	●	020	6529452	27,40
GX24-3E400N04-UD4	WKP33S	10	●	020	6529615	27,40
GX24-3E400N04-UD4	WSM33S	10	●	020	6193843	27,40
GX24-3E400N04-UD6	WSM23S	10	●	020	6167488	27,40
GX24-3E400N04-UD6	WSM33S	10	●	020	6167489	27,40
GX24-3E400N04-UF4	WKP23S	10	●	020	6529442	27,40
GX24-3E400N04-UF4	WSM23S	10	●	020	6738335	27,40
GX24-3E400N04-UF4	WSM33S	10	●	020	6152470	27,40
GX24-3E400N04-UF4	WSM43S	10	●	020	6152472	27,40
GX24-3E400N04-UF8	WSM23S	10	●	020	6955196	35,60
GX24-3E400N040-UA4	WAK20	10	●	020	5108639	27,40
GX24-3E400N040-UF4	WSM33	10	●	020	5512428	27,40
GX24-3E400N08-UD4	WKP13S	10	●	020	6529472	27,40
GX24-3E400N08-UD4	WKP23S	10	●	020	6529453	27,40
GX24-3E400N08-UD4	WKP33S	10	●	020	6529616	27,40
GX24-3E400N08-UD4	WSM33S	10	●	020	6193844	27,40
GX24-3E400N08-UF4	WKP23S	10	●	020	6529443	27,40
GX24-3E400N08-UF4	WSM33S	10	●	020	6152473	27,40
GX24-3E400N20-RD4	WKP23S	10	●	020	6529724	27,40
GX24-3E400N20-RD4	WSM33S	10	●	020	6153445	27,40
GX24-3E400N20-RF7	WSM13S	10	●	020	7934758	27,40
GX24-3E400N20-RF7	WSM23S	10	●	020	7934771	27,40
GX24-3E400N20-RF8	WSM13S	10	●	020	6166539	35,60
GX24-3E400N20-RF8	WSM23S	10	●	020	6166561	35,60
GX24-3E400R6-CE4	WSM33S	10	●	020	6092474	27,40
GX24-3E400R6-CF5	WSM33S	10	●	020	6092041	27,40
GX24-3E475N04-UF4	WSM33S	10	●	020	6118734	29,90
GX24-3E475N24-RD4	WSM33S	10	●	020	6118454	29,90
GX24-3E500L04-AF5	WKP23S	10	●	020	8211142	29,90
GX24-3E500L04-AF5	WSM33S	10	●	020	8211141	29,90
GX24-3E500N02-UF8	WSM23S	10	●	020	7123838	38,80
GX24-3E500N03-CE4	WKP23S	10	●	020	6529719	29,90
GX24-3E500N03-CE4	WSM33S	10	●	020	6092254	29,90
GX24-3E500N03-CE4	WSM43S	10	●	020	6092255	29,90
GX24-3E500N03-CF5	WSM33S	10	●	020	6091914	29,90
GX24-3E500N03-CF5	WSM43S	10	●	020	6091915	29,90
GX24-3E500N030-CE4	WPP23	10	●	020	5612662	29,90
GX24-3E500N04-GD3	WKP23S	10	●	020	6529713	29,90
GX24-3E500N04-GD3	WSM33S	10	●	020	6153389	29,90
GX24-3E500N04-GD6	WSM23S	10	●	020	6167377	29,90
GX24-3E500N04-GD6	WSM33S	10	●	020	6167378	29,90
GX24-3E500N04-UA4	WKP13S	10	●	020	6529744	29,90
GX24-3E500N04-UA4	WKP33S	10	●	020	6529743	29,90

Bezeichnung / Designation	Sorte / Grade	VE / US		Disc. Gr.	Article No.	EURO Stück / piece
GX24-3E500N04-UD4	WKP13S	10	●	020	6529473	29,90
GX24-3E500N04-UD4	WKP23S	10	●	020	6529454	29,90
GX24-3E500N04-UD4	WKP33S	10	●	020	6529617	29,90
GX24-3E500N04-UD4	WSM33S	10	●	020	6193845	29,90
GX24-3E500N04-UD6	WSM23S	10	●	020	6167500	29,90
GX24-3E500N04-UD6	WSM33S	10	●	020	6167501	29,90
GX24-3E500N04-UF4	WKP23S	10	●	020	6529445	29,90
GX24-3E500N04-UF4	WSM23S	10	●	020	6738336	29,90
GX24-3E500N04-UF4	WSM33S	10	●	020	6152475	29,90
GX24-3E500N04-UF4	WSM43S	10	●	020	6152478	29,90
GX24-3E500N04-UF8	WSM23S	10	●	020	6955198	38,80
GX24-3E500N040-UA4	WAK20	10	●	020	5108638	29,90
GX24-3E500N08-UD4	WKP13S	10	●	020	6529474	29,90
GX24-3E500N08-UD4	WKP23S	10	●	020	6529455	29,90
GX24-3E500N08-UD4	WKP33S	10	●	020	6529618	29,90
GX24-3E500N08-UD4	WSM33S	10	●	020	6193846	29,90
GX24-3E500N08-UF4	WKP23S	10	●	020	6529446	29,90
GX24-3E500N08-UF4	WSM33S	10	●	020	6152510	29,90
GX24-3E500N08-UF8	WSM23S	10	●	020	6955199	38,80
GX24-3E500N25-RD4	WKP23S	10	●	020	6529726	29,90
GX24-3E500N25-RD4	WSM33S	10	●	020	6153446	29,90
GX24-3E500N25-RF7	WSM13S	10	●	020	7934759	29,90
GX24-3E500N25-RF7	WSM23S	10	●	020	7934772	29,90
GX24-3E500N25-RF8	WSM13S	10	●	020	6166562	38,80
GX24-3E500N25-RF8	WSM23S	10	●	020	6166563	38,80
GX24-3E500N250-RF8	WSM13	10	●	020	6677491	38,80
GX24-3E500R04-AF5	WKP23S	10	●	020	8211129	29,90
GX24-3E500R04-AF5	WSM33S	10	●	020	8211128	29,90
GX24-3E6.30N	WMG40	10	●	020	5149622	22,42
GX24-3F400N02-CF5	WSM33S	10	●	020	6091964	18,36
GX24-3F400N02EM-1	WBS10	1	●	023	7823884	119,00
GX24-3F400N02FS-F1	WDN10	1	●	025	7629598	178,00
GX24-3F400N02TM-1	WBH20	1	●	023	7823876	119,00
GX24-3F400N03-CE4	WSM33S	10	●	020	6092283	18,36
GX24-3F400N03-CE4	WSM43S	10	●	020	6092347	18,36
GX24-3F400N04-UF4	WSM33S	10	●	020	8060585	18,36
GX24-3F400N20-RF7	WSM13S	10	●	020	7934755	18,36
GX24-3F400N20EM-1	WBS10	1	●	023	7823888	119,00
GX24-3F400N20FS-M1	WDN10	1	●	025	7629625	178,00
GX24-3F400N20TM-1	WBH20	1	●	023	7823880	119,00
GX24-3F500L04-AF5	WSM33S	10	●	020	8211143	26,00
GX24-3F500N02FS-F1	WDN10	1	●	025	7629620	194,00
GX24-3F500N03-CF5	WSM33S	10	●	020	6092001	20,01
GX24-3F500N04-UF4	WSM33S	10	●	020	8060586	20,01
GX24-3F500N04EM-1	WBS10	1	●	023	7823885	130,00
GX24-3F500N04TM-1	WBH20	1	●	023	7823877	130,00
GX24-3F500N25-RD4	WKP23S	10	●	020	8211147	20,01
GX24-3F500N25-RD4	WSM33S	10	●	020	8211146	20,01
GX24-3F500N25-RF7	WSM13S	10	●	020	7934756	20,01
GX24-3F500N25-RF7	WSM23S	10	●	020	8211145	20,01
GX24-3F500N25-RF7	WSM33S	10	●	020	8211144	20,01
GX24-3F500N25EM-1	WBS10	1	●	023	7823889	130,00
GX24-3F500N25FS-M1	WDN10	1	●	025	7629627	194,00
GX24-3F500N25TM-1	WBH20	1	●	023	7823881	130,00
GX24-3F500R04-AF5	WSM33S	10	●	020	8211140	26,00
GX24-4E600N03-CE4	WKP23S	10	●	020	6529720	32,40
GX24-4E600N03-CE4	WSM33S	10	●	020	6092256	32,40
GX24-4E600N03-CE4	WSM43S	10	●	020	6092257	32,40
GX24-4E600N05-GD3	WKP23S	10	●	020	6529714	32,40
GX24-4E600N05-GD3	WSM33S	10	●	020	6153423	32,40
GX24-4E600N05-GD6	WSM23S	10	●	020	6167424	32,40
GX24-4E600N05-GD6	WSM33S	10	●	020	6167425	32,40
GX24-4E600N05-UA4	WKP13S	10	●	020	6529746	32,40
GX24-4E600N05-UA4	WKP33S	10	●	020	6529745	32,40
GX24-4E600N05-UD4	WKP13S	10	●	020	6529475	32,40
GX24-4E600N05-UD4	WKP23S	10	●	020	6529456	32,40
GX24-4E600N05-UD4	WKP33S	10	●	020	6529619	32,40
GX24-4E600N05-UD4	WSM33S	10	●	020	6193848	32,40
GX24-4E600N05-UD6	WSM33S	10	●	020	6167503	32,40
GX24-4E600N05-UF4	WKP23S	10	●	020	6529447	32,40

Bezeichnung / Designation	Sorte / Grade	VE / US		Disc. Gr.	Article No.	EURO Stück / piece
GX24-4E600N05-UF4	WSM33S	10	●	020	6152512	32,40
GX24-4E600N05-UF4	WSM43S	10	●	020	6152513	32,40
GX24-4E600N08-UD4	WKP13S	10	●	020	6529476	32,40
GX24-4E600N08-UD4	WKP23S	10	●	020	6529457	32,40
GX24-4E600N08-UD4	WKP33S	10	●	020	6529660	32,40
GX24-4E600N08-UD4	WSM33S	10	●	020	6193861	32,40
GX24-4E600N08-UF4	WKP23S	10	●	020	6529448	32,40
GX24-4E600N08-UF4	WSM33S	10	●	020	6152514	32,40
GX24-4E600N08-UF8	WSM23S	10	●	020	6955202	42,10
GX24-4E600N30-RD4	WKP23S	10	●	020	6529727	32,40
GX24-4E600N30-RD4	WSM33S	10	●	020	6153448	32,40
GX24-4E600N30-RF8	WSM13S	10	●	020	6166564	42,10
GX24-4E600N30-RF8	WSM23S	10	●	020	6166566	42,10
GX24-4E635N05-UF4	WSM33S	10	●	020	6118735	32,40
GX24-4E635N32-RD4	WSM33S	10	●	020	6118455	32,40
GX24-4E8.30N	WMG40	10	●	020	5149623	24,26
GX24-4F600N02FS-F1	WDN10	1	●	025	7629621	210,00
GX24-4F600N04EM-1	WBS10	1	●	023	7823886	141,00
GX24-4F600N04TM-1	WBH20	1	●	023	7823878	141,00
GX24-4F600N05-UF4	WSM33S	10	●	020	8060587	21,67
GX24-4F600N30EM-1	WBS10	1	●	023	7823890	141,00
GX24-4F600N30FS-M1	WDN10	1	●	025	7629628	210,00
GX24-4F600N30TM-1	WBH20	1	●	023	7823882	141,00
GX24-4R300N-RK8	WK1	10	●	020	5106905	31,60
GX24-5E10.30N	WMG40	10	●	020	5149624	27,10
GX30-5E800N08-UD4	WKP23S	5	●	020	6529458	39,40
GX30-5E800N08-UD4	WKP33S	5	●	020	6659644	39,40
GX30-5E800N08-UD4	WSM33S	5	●	020	6193847	39,40
GX30-5E800N08-UF4	WSM33S	5	●	020	6641657	39,40
GX30-5E800N12-UD4	WSM33S	5	●	020	6193866	39,40
GX30-5E800N40-RD4	WKP23S	5	●	020	6529729	39,40
GX30-5E800N40-RD4	WSM33S	5	●	020	6659642	39,40
GX30-5E800N40-RF8	WSM23S	5	●	020	6641660	51,20
GX34-2E300L6-CE4	WSM33S	5	■	020	7318902[1]	28,30
GX34-2E300L6-CF5	WSM33S	5	●	020	7318904	28,30
GX34-2E300N03-CE4	WKP23S	5	●	020	7318885	28,30
GX34-2E300N03-CE4	WSM33S	5	●	020	7318883	28,30
GX34-2E300N03-CE4	WSM43S	5	●	020	7318884	28,30
GX34-2E300N03-CF5	WSM23S	5	●	020	7318886	28,30
GX34-2E300N03-CF5	WSM33S	5	●	020	7318887	28,30
GX34-2E300N03-CF5	WSM43S	5	●	020	7318888	28,30
GX34-2E300N03-GD6	WSM33S	5	●	020	7318900	28,30
GX34-2E300R6-CE4	WSM33S	5	■	020	7318901[1]	28,30
GX34-2E300R6-CF5	WSM33S	5	●	020	7318903	28,30
GX34-3E400N04-CE4	WSM33S	5	●	020	7318905	31,10
GX34-3E400N04-CF5	WSM23S	5	■	020	7318909[1]	31,10
GX34-3E400N04-CF5	WSM33S	5	●	020	7318910	31,10
GX34-3E400N04-CF5	WSM43S	5	●	020	7318911	31,10
GX34-3E400N04-GD6	WSM33S	5	●	020	7318908	31,10
GXA16-0		1	●	095	7981372	19,76
GXA16-1	H81	1	●	095	7967937	19,76
GXA16-2		1	●	095	7981373	19,76
GXA16-3		1	●	095	7981374	19,76
GXA16-4		1	●	095	7981375	19,76
GXA16-98		1	●	095	7981376	19,76
GXA16-99		1	●	095	7981377	19,76
H1E01118-E10-10	TAX	2	●	MS5	6068732	49,60
H1E01118-E12-12	TAX	2	●	MS5	6068733	62,00
H1E01118-E16-16	TAX	2	●	MS5	6068734	96,10
H1E12018-E10-10-0.5	TAX	2	●	MS5	6068736[2]	46,20
H1E12018-E12-12-0.5	TAX	2	●	MS5	6068745[2]	57,80
H1E12018-E12-12-1	TAX	2	●	MS5	6068747[2]	57,80
H1E12018-E16-16-0.2	TAX	2	●	MS5	6068754[2]	89,60
H1E12018-E16-16-0.5	TAX	2	●	MS5	6068755[2]	89,60
H1E12018-E16-16-1	TAX	2	●	MS5	6068757[2]	89,60
H1E12018-E16-16-2	TAX	2	●	MS5	6068760[2]	89,60
H1E12018-E16-16-3	TAX	2	●	MS5	6068761[2]	89,60
H1E58018-E12-12	TAX	2	●	MS5	6068769	59,60
H1E58118-E10-10	TAX	2	●	MS5	6068765	47,70
H1E58118-E12-12	TAX	2	●	MS5	6068768	59,60

Bezeichnung / Designation	Sorte / Grade	VE / US		Disc. Gr.	Article No.	EURO Stück / piece
H1E58318-E10-10	TAX	2	●	MS5	6068764	47,70
H1E58318-E12-12	TAX	2	●	MS5	6068767	59,60
H1E58318-E16-16	TAX	2	●	MS5	6068770	92,50
H1E58518-E10-10	TAX	2	●	MS5	6068763	47,70
H1E58518-E12-12	TAX	2	●	MS5	6068766	59,60
H2034217-6	TAA	1	●	MS4	6231676	93,70
H2034217-8	TAA	1	●	MS4	6231677	131,00
H2034217-10	TAA	1	●	MS4	6231678	169,00
H2034217-12	TAA	1	●	MS4	6231679	225,00
H2034217-14	TAA	1	●	MS4	6231720	300,00
H2034217-16	TAA	1	●	MS4	6231721	356,00
H2034217-20	TAA	1	●	MS4	6231723	543,00
H2038217-10-0.5	TAA	1	●	MS4	6231729	186,00
H2038217-12-0.5	TAA	1	●	MS4	6231733	247,00
H2038217-16-0.5	TAA	1	●	MS4	6231737	392,00
H2038217-6-0.5	TAA	1	●	MS4	6231724	103,00
H2038217-8-0.5	TAA	1	●	MS4	6231726	144,00
H2038217-6-1	TAA	1	●	MS4	6231725	103,00
H2038217-8-1	TAA	1	●	MS4	6231727	144,00
H2038217-8-2	TAA	1	●	MS4	6231728	144,00
H2038217-10-1	TAA	1	●	MS4	6231730	186,00
H2038217-10-2	TAA	1	●	MS4	6231731	186,00
H2038217-10-3	TAA	1	●	MS4	6231732	186,00
H2038217-12-1	TAA	1	●	MS4	6231734	247,00
H2038217-12-2	TAA	1	●	MS4	6231735	247,00
H2038217-12-3	TAA	1	●	MS4	6231736	247,00
H2038217-16-1	TAA	1	●	MS4	6231738	392,00
H2038217-16-2	TAA	1	●	MS4	6231739	392,00
H2038217-16-3	TAA	1	●	MS4	6231740	392,00
H2038217-20-1	TAA	1	●	MS4	6231741	598,00
H2038217-20-2	TAA	1	●	MS4	6231742	598,00
H2134217-10	TAA	1	●	MS4	6231745	169,00
H2134217-12	TAA	1	●	MS4	6231746	225,00
H2134217-14	TAA	1	●	MS4	6231747	300,00
H2134217-16	TAA	1	●	MS4	6231748	356,00
H2134217-18	TAA	1	●	MS4	6231749	468,00
H2134217-20	TAA	1	●	MS4	6231750	543,00
H2138217-10-0.5	TAA	1	●	MS4	6231751	186,00
H2138217-12-0.5	TAA	1	●	MS4	6231755	247,00
H2138217-16-0.5	TAA	1	●	MS4	6231759	392,00
H2138217-10-1	TAA	1	●	MS4	6231752	186,00
H2138217-10-2	TAA	1	●	MS4	6231753	186,00
H2138217-12-1	TAA	1	●	MS4	6231756	247,00
H2138217-12-2	TAA	1	●	MS4	6231757	247,00
H2138217-12-3	TAA	1	●	MS4	6231758	247,00
H2138217-16-1	TAA	1	●	MS4	6231760	392,00
H2138217-16-2	TAA	1	●	MS4	6231761	392,00
H2138217-16-3	TAA	1	●	MS4	6231762	392,00
H2138217-20-1	TAA	1	●	MS4	6231763	598,00
H2138217-20-2	TAA	1	●	MS4	6231764	598,00
H2138217-20-3	TAA	1	●	MS4	6231765	598,00
H2138217-20-4	TAA	1	●	MS4	6231766	598,00
H2EC34217-E10-10	TAA	1	●	MS5	6335159	81,40
H2EC34217-E12-12	TAA	1	●	MS5	6335180	102,00
H2EC34217-E16-16	TAA	1	●	MS5	6335181	158,00
H2EC34217-E20-20	TAA	1	●	MS5	6335182	188,00
H2EC34217-E25-25	TAA	1	●	MS5	6335183	230,00
H2EC38217-E10-10-0.5	TAA	1	●	MS5	6335184	85,40
H2EC38217-E10-10-1	TAA	1	●	MS5	6335185	85,40
H2EC38217-E10-10-1.5	TAA	2	●	MS5	6335186	85,40
H2EC38217-E10-10-2	TAA	1	●	MS5	6335187	85,40
H2EC38217-E10-10-3	TAA	1	●	MS5	6335188	85,40
H2EC38217-E12-12-0.5	TAA	1	●	MS5	6335189	107,00
H2EC38217-E12-12-1	TAA	1	●	MS5	6335190	107,00
H2EC38217-E12-12-1.5	TAA	2	●	MS5	6335191	107,00
H2EC38217-E12-12-2	TAA	1	●	MS5	6335192	107,00
H2EC38217-E12-12-3	TAA	1	●	MS5	6335193	107,00
H2EC38217-E12-12-4	TAA	1	●	MS5	6335194	107,00
H2EC38217-E16-16-1	TAA	1	●	MS5	6335195	166,00
H2EC38217-E16-16-2	TAA	1	●	MS5	6335197	166,00

Bezeichnung / Designation	Sorte / Grade	VE / US		Disc. Gr.	Article No.	EURO Stück / piece
H2EC38217-E16-16-3	TAA	1	●	MS5	6335198	166,00
H2EC38217-E16-16-4	TAA	1	●	MS5	6335199	166,00
H2EC38217-E20-20-1	TAA	1	●	MS5	6335200	198,00
H2EC38217-E20-20-2	TAA	1	●	MS5	6335202	198,00
H2EC38217-E20-20-4	TAA	1	●	MS5	6335204	198,00
H2EC38217-E25-25-1	TAA	1	●	MS5	6335205	241,00
H2EC38217-E25-25-2	TAA	1	●	MS5	6335207	241,00
H2EC38217-E25-25-3	TAA	1	●	MS5	6335208	241,00
H2EC38217-E25-25-4	TAA	1	●	MS5	6335209	241,00
H2EC94717-E10-10	TAA	1	●	MS5	6377507	80,80
H2EC94717-E12-12	TAA	1	●	MS5	6377508	101,00
H2EC94717-E16-16	TAA	1	●	MS5	6377509	157,00
H2EC94717-E20-20	TAA	1	●	MS5	6377510	187,00
H2EC94717-E25-25	TAA	1	●	MS5	6719288	232,00
H302211-2		1	●	MS2	5081953	44,70
H302211-2.5		1	●	MS2	5081954	44,70
H302211-3		1	●	MS2	5081955	44,70
H302211-3.5		1	●	MS2	5081956	42,90
H302211-4		1	●	MS2	5081957	50,40
H302211-5		1	●	MS2	5081959	50,40
H302211-6		1	●	MS2	5081961	50,40
H302211-7		1	●	MS2	5081963	66,30
H302211-8		1	■	MS2	5081964[1]	66,30
H302211-9		1	●	MS2	5081965	92,50
H302211-10		1	●	MS2	5081966	92,50
H302211-14		1	●	MS2	5081968	166,00
H302211-16		1	●	MS2	5081969	215,00
H3023138-12-1.5	TAX	1	●	MS4	6371423	213,00
H3023138-25-1	TAX	1	■	MS4	6371435[1]	726,00
H3024148-18	TAX	1	●	MS4	5082056	376,00
H302611-2		1	●	MS2	5082066	44,70
H302611-2.5		1	●	MS2	5082067	44,70
H302611-3		1	●	MS2	5082068	44,70
H302611-3.5		1	●	MS2	5082069	42,90
H302611-4		1	●	MS2	5082070	50,40
H302611-6		1	●	MS2	5082073	50,40
H302611-7		1	●	MS2	5082074	66,30
H302611-8		1	■	MS2	5082075[1]	66,30
H302611-10		1	●	MS2	5082077	92,50
H302611-11		1	●	MS2	5082078	134,00
H302611-12		1	●	MS2	5082079	134,00
H302711-2		1	●	MS2	5082116	44,70
H302711-2.5		1	●	MS2	5082117	44,70
H302711-3		1	●	MS2	5082118	44,70
H302711-3.5		1	●	MS2	5082119	42,90
H302711-4		1	●	MS2	5082120	50,40
H302711-4.5		1	●	MS2	5082121	50,40
H302711-5		1	●	MS2	5082122	50,40
H302711-6		1	●	MS2	5082124	50,40
H302711-8		1	●	MS2	5082128	66,30
H302711-10		1	●	MS2	5082130	92,50
H302711-11		1	●	MS2	5082131	134,00
H302711-12		1	●	MS2	5082132	134,00
H302711-15		1	●	MS2	5082135	215,00
H302711-16		1	●	MS2	5082136	215,00
H302711-20		1	●	MS2	5082138	349,00
H302731-1		1	●	MS2	5082176	50,80
H302731-1.1		1	●	MS2	5082181	50,70
H302731-1.5		1	●	MS2	5082177	50,80
H302731-1.6		1	●	MS2	5082185	50,70
H302731-2.6		1	●	MS2	5082195	34,90
H3027416-4	TICN	1	●	MS2	5082240	72,90
H3027416-6	TICN	1	●	MS2	5082242	72,90
H3027416-8	TICN	1	●	MS2	5082243	104,00
H3027416-10	TICN	1	●	MS2	5082244	129,00
H3027419-1	DIA	1	●	MS2	5082260	107,00
H3027419-1.5	DIA	1	●	MS2	5082261	107,00
H3027419-2	DIA	1	●	MS2	5082262	97,40
H3027419-3	DIA	1	●	MS2	5082263	97,40
H3027419-4	DIA	1	●	MS2	5082264	118,00

Bezeichnung / Designation	Sorte / Grade	VE / US		Disc. Gr.	Article No.	EURO Stück / piece
H3027419-5	DIA	1	●	MS2	5082265	138,00
H3027419-6	DIA	1	●	MS2	5082266	138,00
H3027419-8	DIA	1	●	MS2	5082267	184,00
H3027419-10	DIA	1	●	MS2	5082268	248,00
H3027419-12	DIA	1	●	MS2	5082269	322,00
H302914-2		1	●	MS2	5082283	44,70
H302914-3		1	●	MS2	5082284	44,70
H302914-4		1	●	MS2	5082285	50,40
H302914-5		1	●	MS2	5082286	50,40
H302914-6		1	●	MS2	5082287	50,40
H302914-7		1	●	MS2	5082288	66,30
H302914-8		1	●	MS2	5082289	66,30
H302914-10		1	●	MS2	5082291	92,50
H302914-12		1	●	MS2	5082292	134,00
H302914-20		1	●	MS2	5082296	349,00
H3029146-6	TICN	1	●	MS2	5082301	63,70
H305831-6		1	●	MS2	5082343	58,80
H305831-8		1	●	MS2	5082344	82,60
H305831-10		1	●	MS2	5082345	88,70
H305831-12		1	●	MS2	5082346	112,00
H305851-6		1	●	MS2	5082351	58,80
H305851-10		1	●	MS2	5082352	91,50
H3058917-8	TAX	1	●	MS2	5082362	147,00
H3058917-12	TAX	1	●	MS2	5082364	183,00
H3058917-14	TAX	1	●	MS2	5082365	214,00
H3058917-20	TAX	1	●	MS2	5082367	372,00
H3058917-25	TAX	1	■	MS2	5082368[1]	515,00
H3070318-10-0.5	TAX	1	●	MS4	5530498	132,00
H3070318-12-0.5	TAX	1	●	MS4	5530501	179,00
H3070318-20-0.5	TAX	1	●	MS4	5530513	418,00
H3070318-6-0.5	TAX	1	●	MS4	5530493	74,00
H3070318-8-0.5	TAX	1	●	MS4	5530495	104,00
H3070318-6-1	TAX	1	●	MS4	5530494	74,00
H3070318-8-1	TAX	1	●	MS4	5530496	104,00
H3070318-10-1	TAX	1	●	MS4	5530499	132,00
H3070318-10-2	TAX	1	■	MS4	5530500[1]	132,00
H3070318-12-1	TAX	1	■	MS4	5530502[1]	179,00
H3070318-12-2	TAX	1	●	MS4	5530503	179,00
H3070318-16-1	TAX	1	●	MS4	5530510	284,00
H3070318-16-2	TAX	1	■	MS4	5530511[1]	284,00
H3070318-16-4	TAX	1	●	MS4	5530512	284,00
H3071118-14	TAX	1	●	MS4	5082424	224,00
H3071318-16	TAX	1	●	MS4	5530468	258,00
H3094718-6-100	TAX	1	●	MS2	5201054	121,00
H3094718-8-120	TAX	1	●	MS2	5201055	150,00
H3094718-10-150	TAX	1	●	MS2	5201056	190,00
H3094718-20	TAX	1	●	MS2	5082461	503,00
H3094728-4	TAX	1	●	MS2	5150452[2]	121,00
H3094728-5	TAX	1	●	MS2	5150453[2]	121,00
H3094728-6	TAX	1	●	MS2	5150454[2]	121,00
H3094728-8	TAX	1	●	MS2	5150455[2]	154,00
H3094728-10	TAX	1	●	MS2	5150456[2]	191,00
H3094728-12	TAX	1	●	MS2	5150457[2]	260,00
H3094728-16	TAX	1	●	MS2	5150458[2]	413,00
H311701-3.8		1	●	MS2	5082525	47,70
H311801-2.5		1	●	MS2	5082563	43,70
H311801-3		1	●	MS2	5082564	43,70
H311801-5		1	■	MS2	5082567[1]	47,70
H3121138-6	TAX	1	●	MS4	5082620	93,00
H3121138-8	TAX	1	●	MS4	5082621	119,00
H3121138-12	TAX	1	●	MS4	5082623	204,00
H3121138-16	TAX	1	●	MS4	5082624	329,00
H3121138-20	TAX	1	●	MS4	5082625	497,00
H3127116-2.5	TICN	1	●	MS2	5082817	67,20
H3127116-3	TICN	1	●	MS2	5082818	67,20
H3127116-4	TICN	1	●	MS2	5082819	71,60
H3127116-5	TICN	1	●	MS2	5082820	71,60
H3127116-6	TICN	1	●	MS2	5082821	71,60
H3127116-8	TICN	1	●	MS2	5082822	100,00
H3127116-9	TICN	1	●	MS2	5082823	127,00

Bezeichnung / Designation	Sorte / Grade	VE / US		Disc. Gr.	Article No.	EURO Stück / piece
H3127116-10	TICN	1	●	MS2	5082824	127,00
H3170318-10	TAX	1	●	MS4	5082890	132,00
H3170318-10-1	TAX	1	■	MS4	5530521[1]	132,00
H3170318-20-2	TAX	1	●	MS4	5530533	418,00
H3171318-16	TAX	1	●	MS4	5082907	259,00
H3182378-20	TAX	1	●	MS2	5530567	538,00
H3183017-8	ACN	1	●	MS2	5337881	110,00
H3183017-10	ACN	1	●	MS2	5337882	137,00
H3183017-12	ACN	1	●	MS2	5337883	188,00
H3183378-8-1	TAX	1	●	MS2	6374171	147,00
H3183378-10-1	TAX	1	■	MS2	6374172[1]	182,00
H3183378-12-1	TAX	1	■	MS2	6374175[1]	250,00
H3E29148-E10-10	TAX	1	●	MS5	5627138	54,60
H3E29148-E12-12	TAX	1	●	MS5	5627139	68,30
H3E29148-E16-16	TAX	1	●	MS5	5627150	106,00
H3E29148-E20-20	TAX	1	●	MS5	5627151	126,00
H3E29148-E25-25	TAX	1	●	MS5	5627152	157,00
H3E58118-E12-12	TAX	1	●	MS5	5640956	94,30
H3E58318-E10-10	TAX	1	●	MS5	5927026	62,40
H3E58318-E12-12	TAX	1	●	MS5	5640954	94,30
H3E58318-E16-16	TAX	1	●	MS5	5640955	160,00
H3E58518-E10-10	TAX	1	●	MS5	5927025	62,40
H3E58518-E12-12	TAX	1	●	MS5	5640953	94,30
H3E68118-E10-10-1	TAX	1	●	MS5	5927028	64,90
H3E68118-E10-10-2	TAX	2	●	MS5	5927030	64,90
H3E68118-E10-10-3	TAX	2	●	MS5	5927031	64,90
H3E68118-E12-12-3	TAX	1	●	MS5	5640957	84,90
H3E68118-E16-16-4	TAX	1	●	MS5	5640958	131,00
H3E68118-E16-16-5	TAX	1	●	MS5	5640959	132,00
H3E68118-E20-20-6	TAX	1	●	MS5	5640960	157,00
H3E82378-E10-10	TAX	1	●	MS5	5625241	65,60
H3E82378-E12-12	TAX	1	●	MS5	5625242	81,70
H3E82378-E16-16	TAX	1	●	MS5	5625243	127,00
H3E93718-E10-10	TAX	1	●	MS5	5627110	64,00
H3E93718-E12-12	TAX	1	●	MS5	5627111	80,20
H3E93718-E16-16	TAX	1	●	MS5	5627112	124,00
H4036217-2	TAZ	1	●	MS4	5906978[2]	88,10
H4036217-4	TAZ	1	●	MS4	5906980[2]	88,10
H4036217-5	TAZ	1	●	MS4	5906981[2]	88,10
H4036217-6	TAZ	1	●	MS4	5906982[2]	88,10
H4036217-8	TAZ	1	●	MS4	5906983[2]	123,00
H4036217-10	TAZ	1	●	MS4	5906984[2]	159,00
H4036217-12	TAZ	1	●	MS4	5906985[2]	211,00
H4036217-16	TAZ	1	●	MS4	5906986[2]	335,00
H4036217-20	TAZ	1	●	MS4	5906987[2]	511,00
H404491-0.6-3		1	●	MS4	5150473[2]	87,90
H404491-0.8-12		1	●	MS4	5150481[2]	94,10
H404491-0.8-4		1	●	MS4	5150478[2]	81,80
H404491-1-2.5		1	●	MS4	5150482[2]	61,70
H404491-1.5-15		1	●	MS4	5150489[2]	86,40
H404491-2.5-25		1	■	MS4	5150495[1]	88,20
H404491-3-22.5		1	●	MS4	5150497[2]	81,80
H404491-0.5-1.25		1	●	MS4	5150469[2]	68,70
H404491-1-5		1	●	MS4	5150483[2]	81,80
H404491-1-10		1	●	MS4	5150485[2]	86,40
H404491-1.5-7.5		1	●	MS4	5150488[2]	81,80
H404491-2-10		1	●	MS4	5150490[2]	83,40
H404491-2-15		1	●	MS4	5150491[2]	86,60
H404491-2-20		1	●	MS4	5150492[2]	88,20
H404491-3-15		1	●	MS4	5150496[2]	78,60
H404491-3-30		1	●	MS4	5150498[2]	84,20
H4044918-0.4-1	TAX	1	●	MS4	5150499	87,30
H4044918-0.4-2	TAX	1	●	MS4	5150500	106,00
H4044918-0.4-4	TAX	1	●	MS4	5150501	113,00
H4044918-0.5-5	TAX	1	●	MS4	5150504	113,00
H4044918-0.6-3	TAX	1	●	MS4	5150506	106,00
H4044918-0.8-2	TAX	1	●	MS4	5150510	82,90
H4044918-0.8-4	TAX	1	●	MS4	5150511	99,80
H4044918-0.8-6	TAX	1	●	MS4	5150512	104,00
H4044918-0.8-8	TAX	1	●	MS4	5150513	109,00

Bezeichnung / Designation	Sorte / Grade	VE / US		Disc. Gr.	Article No.	EURO Stück / piece
H4044918-1-2.5	TAX	1	●	MS4	5150515	80,60
H4044918-1-7.5	TAX	1	●	MS4	5150517	103,00
H4044918-1.5-15	TAX	1	●	MS4	5150522	104,00
H4044918-2.5-25	TAX	1	●	MS4	5150528	107,00
H4044918-3-22.5	TAX	1	●	MS4	5150530	101,00
H4044918-0.5-1.25	TAX	1	●	MS4	5150502	87,30
H4044918-0.5-2.5	TAX	1	●	MS4	5150503	106,00
H4044918-0.6-1.5	TAX	1	●	MS4	5150505	87,30
H4044918-0.6-4.5	TAX	1	●	MS4	5150507	109,00
H4044918-1-5	TAX	1	●	MS4	5150516	99,80
H4044918-1-10	TAX	1	●	MS4	5150518	104,00
H4044918-1-15	TAX	1	●	MS4	5150519	107,00
H4044918-1-20	TAX	1	●	MS4	5150520	107,00
H4044918-1.5-7.5	TAX	1	●	MS4	5150521	99,80
H4044918-2-10	TAX	1	●	MS4	5150523	102,00
H4044918-2-15	TAX	1	●	MS4	5150524	105,00
H4044918-2-20	TAX	1	●	MS4	5150525	107,00
H4044918-2-30	TAX	1	●	MS4	5150526	111,00
H4044918-2.5-12.5	TAX	1	●	MS4	5150527	102,00
H4044918-3-15	TAX	1	●	MS4	5150529	97,60
H4044918-3-30	TAX	1	●	MS4	5150531	103,00
H4044919-0.6-9	DIA	1	●	MS4	5150542	142,00
H4044919-1-10	DIA	1	●	MS4	5150551	132,00
H4044919-1-15	DIA	1	●	MS4	5150552	134,00
H4044919-1.5-7.5	DIA	1	●	MS4	5150554	127,00
H4044919-2-10	DIA	1	●	MS4	5150556	131,00
H4044919-2-15	DIA	1	●	MS4	5150557	134,00
H4044919-2-20	DIA	1	●	MS4	5150558	135,00
H4044919-2-30	DIA	1	●	MS4	5150559	140,00
H4044919-3-15	DIA	1	●	MS4	5150562	126,00
H4044919-3-30	DIA	1	●	MS4	5150564	131,00
H4044928-0.8-4	TAX	1	■	MS4	5150574[1]	111,00
H4044928-2.5-6	TAX	1	●	MS4	5150585	81,40
H4044928-0.5-3.75	TAX	1	●	MS4	5150569	116,00
H404691-1-2.5		1	●	MS4	5150609[2]	61,70
H404691-0.6-1.5		1	●	MS4	5150600[2]	68,70
H404691-1-5		1	●	MS4	5150610[2]	81,80
H404691-1.5-7.5		1	●	MS4	5150615[2]	81,80
H404691-2-10		1	●	MS4	5150617[2]	83,40
H404691-3-15		1	●	MS4	5150623[2]	78,60
H4046918-0.4-1	TAX	1	●	MS4	5150629	87,30
H4046918-0.4-2	TAX	1	●	MS4	5150630	106,00
H4046918-0.4-4	TAX	1	●	MS4	5150631	113,00
H4046918-0.5-5	TAX	1	●	MS4	5150634	113,00
H4046918-0.6-3	TAX	1	●	MS4	5150636	106,00
H4046918-0.6-6	TAX	1	●	MS4	5150637	113,00
H4046918-0.6-9	TAX	1	●	MS4	5150638	114,00
H4046918-0.8-12	TAX	1	●	MS4	5150643	112,00
H4046918-0.8-2	TAX	1	●	MS4	5150639	82,90
H4046918-0.8-4	TAX	1	●	MS4	5150640	99,80
H4046918-1-2.5	TAX	1	●	MS4	5150644	80,60
H4046918-1-7.5	TAX	1	●	MS4	5150646	103,00
H4046918-1.5-15	TAX	1	●	MS4	5150651	104,00
H4046918-0.3-1.5	TAX	1	●	MS4	5150627	106,00
H4046918-0.5-1.25	TAX	1	●	MS4	5150632	87,30
H4046918-0.6-1.5	TAX	1	●	MS4	5150635	87,30
H4046918-1-5	TAX	1	●	MS4	5150645	99,80
H4046918-1-10	TAX	1	●	MS4	5150647	104,00
H4046918-1-15	TAX	1	●	MS4	5150648	107,00
H4046918-1.5-7.5	TAX	1	●	MS4	5150650	99,80
H4046918-2-10	TAX	1	●	MS4	5150652	102,00
H4046918-2-15	TAX	1	●	MS4	5150653	105,00
H4046918-2-20	TAX	1	●	MS4	5150654	107,00
H4046918-2-30	TAX	1	●	MS4	5150655	111,00
H4046918-2.5-12.5	TAX	1	●	MS4	5150656	102,00
H4046918-3-15	TAX	1	●	MS4	5150658	97,60
H4046919-0.3-3	DIA	1	●	MS4	5150663	137,00
H4046919-0.4-2	DIA	1	●	MS4	5150665	134,00
H4046919-0.5-5	DIA	1	●	MS4	5150669	140,00
H4046919-0.6-3	DIA	1	●	MS4	5150671	133,00

Bezeichnung / Designation	Sorte / Grade	VE / US		Disc. Gr.	Article No.	EURO Stück / piece
H4046919-0.6-9	DIA	1	●	MS4	5150673	**142,00**
H4046919-0.8-8	DIA	1	●	MS4	5150677	**134,00**
H4046919-1.5-15	DIA	1	●	MS4	5150686	**132,00**
H4046919-1-5	DIA	1	●	MS4	5150680	**127,00**
H4046919-1-10	DIA	1	●	MS4	5150682	**132,00**
H4046919-1-15	DIA	1	●	MS4	5150683	**134,00**
H4046919-1-20	DIA	1	●	MS4	5150684	**134,00**
H4046919-1.5-7.5	DIA	1	●	MS4	5150685	**127,00**
H4046919-2-10	DIA	1	●	MS4	5150687	**131,00**
H4046919-2-20	DIA	1	●	MS4	5150689	**135,00**
H4046919-2-30	DIA	1	●	MS4	5150690	**140,00**
H4046919-3-15	DIA	1	●	MS4	5150693	**126,00**
H4046919-3-30	DIA	1	●	MS4	5150695	**131,00**
H4046988-1-1.5	TAS	1	●	MS7	6016684	**125,00**
H4046988-1.5-12	TAS	1	●	MS7	6016694	**125,00**
H4046988-1.5-8	TAS	1	●	MS7	6016693	**122,00**
H4046988-1-3	TAS	1	●	MS7	6016685	**129,00**
H4046988-1-6	TAS	1	●	MS7	6016686	**132,00**
H4046988-1-8	TAS	1	●	MS7	6016687	**134,00**
H4046988-1-10	TAS	1	●	MS7	6016688	**136,00**
H4046988-1.2-1.8	TAS	1	●	MS7	6016689	**121,00**
H4046988-1.2-3.6	TAS	1	●	MS7	6016690	**125,00**
H4046988-1.5-2.25	TAS	1	●	MS7	6016691	**117,00**
H4046988-1.5-4.5	TAS	1	●	MS7	6016692	**120,00**
H4046988-2-3	TAS	1	●	MS7	6016695	**117,00**
H4046988-2-6	TAS	1	●	MS7	6016696	**120,00**
H4046988-2-8	TAS	1	●	MS7	6016697	**123,00**
H4046988-2-12	TAS	1	●	MS7	6016698	**125,00**
H4129318-2	TAX	1	●	MS2	5083113[1]	**81,30**
H4129318-3	TAX	1	●	MS2	5083114[1]	**81,30**
H4129318-4	TAX	1	●	MS2	5083115[1]	**86,70**
H4129318-10	TAX	1	●	MS2	5083120[1]	**153,00**
H4135217-12	TAZ	1	●	MS4	6826936[2]	**193,00**
H4137217-20-1	TAZ	1	●	MS4	6826946[1]	**514,00**
H4180378-6	TAX	1	●	MS2	5588268	**94,50**
H4180378-8	TAX	1	●	MS2	5588269	**134,00**
H4180378-10	TAX	1	●	MS2	5588270	**167,00**
H4180378-12	TAX	1	●	MS2	5588271	**229,00**
H4180378-14	TAX	1	■	MS2	5588272[3]	**276,00**
H4180378-16	TAX	1	●	MS2	5588273	**363,00**
H4180378-20	TAX	1	●	MS2	5588274	**538,00**
H4189278-6	TAX	1	●	MS2	5530588	**103,00**
H4189278-8	TAX	1	●	MS2	5530589	**146,00**
H4189278-10	TAX	1	●	MS2	5530590	**182,00**
H4189278-12	TAX	1	●	MS2	5530591	**249,00**
H4189278-14	TAX	1	●	MS2	5530592	**300,00**
H4189278-20	TAX	1	●	MS2	5530595	**585,00**
H4E34217-E10-10	TAZ	1	●	MS5	6073506	**68,40**
H4E34217-E12-12	TAZ	1	●	MS5	6073507	**85,40**
H4E34217-E16-16	TAZ	1	●	MS5	6073508	**132,00**
H4E34217-E20-20	TAZ	1	●	MS5	6073509	**158,00**
H4E38217-E10-10-0.5	TAZ	1	●	MS5	6073650	**71,80**
H4E38217-E10-10-1	TAZ	2	●	MS5	6073651	**71,80**
H4E38217-E10-10-2	TAZ	1	●	MS5	6073653	**71,80**
H4E38217-E12-12-0.5	TAZ	1	●	MS5	6073655	**89,70**
H4E38217-E12-12-1	TAZ	1	●	MS5	6073656	**89,70**
H4E38217-E12-12-1.5	TAZ	1	●	MS5	6073657	**89,70**
H4E38217-E12-12-2	TAZ	1	●	MS5	6073658	**89,70**
H4E38217-E12-12-3	TAZ	1	●	MS5	6073659	**89,70**
H4E38217-E16-16-0.5	TAZ	1	●	MS5	6073661	**139,00**
H4E38217-E16-16-1	TAZ	1	●	MS5	6073662	**139,00**
H4E38217-E16-16-2	TAZ	1	●	MS5	6073664	**139,00**
H4E38217-E16-16-3	TAZ	1	●	MS5	6073665	**139,00**
H4E38217-E16-16-4	TAZ	1	●	MS5	6073666	**139,00**
H4E38217-E20-20-0.5	TAZ	1	●	MS5	6073667	**166,00**
H4E38217-E20-20-1	TAZ	1	●	MS5	6073668	**166,00**
H4E38217-E20-20-2	TAZ	1	●	MS5	6073669	**166,00**
H4E38217-E20-20-3	TAZ	1	●	MS5	6073670	**166,00**
H4E38217-E20-20-4	TAZ	1	●	MS5	6073671	**166,00**
H5033008-M6	TAX	1	●	TSM	5539001	**355,00**

Bezeichnung / Designation	Sorte / Grade	VE / US		Disc. Gr.	Article No.	EURO Stück / piece
H5033008-M8	TAX	1	●	TSM	5539002	**418,00**
H5033008-M10	TAX	1	●	TSM	5539003	**491,00**
H5033008-M12	TAX	1	●	TSM	5539004	**653,00**
H5033008-M16	TAX	1	●	TSM	5539005	**909,00**
H5036006-MJ4	TICN	1	●	TSM	5115419	**213,00**
H5036006-MJ5	TICN	1	●	TSM	5115420	**229,00**
H5036006-MJ6	TICN	1	●	TSM	5115421	**278,00**
H5036016-MJ8	TICN	1	●	TSM	5115422	**376,00**
H5036016-MJ10	TICN	1	●	TSM	5115423	**441,00**
H505500-M3		1	●	TSM	5930638	**262,00**
H5055006-M3	TICN	1	●	TSM	5930639	**271,00**
H5055016-M4	TICN	1	●	TSM	5930622	**248,00**
H5055016-M5	TICN	1	●	TSM	5930623	**262,00**
H5055016-M6	TICN	1	●	TSM	5930624	**300,00**
H5055016-M8	TICN	1	●	TSM	5930625	**372,00**
H5055016-M10	TICN	1	●	TSM	5930626	**445,00**
H5055016-M12	TICN	1	●	TSM	5930627	**592,00**
H5055016-M14	TICN	1	●	TSM	5930628	**666,00**
H5055016-M16	TICN	1	●	TSM	5930629	**829,00**
H5055106-M3	TICN	1	●	TSM	5930640	**276,00**
H5055116-M4	TICN	1	●	TSM	5930630	**258,00**
H5055116-M5	TICN	1	●	TSM	5930631	**271,00**
H5055116-M6	TICN	1	●	TSM	5930632	**310,00**
H5055116-M8	TICN	1	●	TSM	5930633	**383,00**
H5055116-M10	TICN	1	●	TSM	5930634	**455,00**
H5055116-M12	TICN	1	●	TSM	5930635	**600,00**
H5055116-M14	TICN	1	●	TSM	5930636	**673,00**
H5055116-M16	TICN	1	●	TSM	5930637	**839,00**
H5075011-M6	NHC	1	●	TSM	5910479	**606,00**
H5075011-M8	NHC	1	●	TSM	5910480	**727,00**
H5075018-M6	TAX	1	●	TSM	5910474	**577,00**
H5075018-M8	TAX	1	●	TSM	5910475	**692,00**
H5075018-M10	TAX	1	●	TSM	5910476	**808,00**
H5083008-M2	TAX	1	●	TSM	5834356	**206,00**
H5083008-M2.5	TAX	1	●	TSM	5834357	**199,00**
H5083008-M3	TAX	1	●	TSM	5834358	**190,00**
H5083008-M4	TAX	1	●	TSM	5834359	**152,00**
H5083008-M5	TAX	1	●	TSM	5834370	**161,00**
H5083008-M6	TAX	1	●	TSM	5834371	**184,00**
H5133008-M12X1	TAX	1	●	TSM	5539006	**653,00**
H5133008-M14X1.5	TAX	1	●	TSM	5539007	**866,00**
H5150106-M10X1	TICN	1	●	TSM	5115457	**415,00**
H5150106-M12X1.5	TICN	1	●	TSM	5115458	**492,00**
H5150106-M16X1	TICN	1	●	TSM	5115459	**631,00**
H5150106-M16X1.25	TICN	1	●	TSM	5115460	**631,00**
H5150106-M16X1.5	TICN	1	●	TSM	5115461	**641,00**
H5150106-M16X2	TICN	1	●	TSM	5115463	**641,00**
H5336006-UNJF10	TICN	1	●	TSM	5115534	**228,00**
H5336006-UNJF1/4	TICN	1	●	TSM	5115535	**278,00**
H5336016-UNJF5/16	TICN	1	●	TSM	5115536	**376,00**
H5336016-UNJF3/8	TICN	1	●	TSM	5115537	**441,00**
H5336016-UNJF7/16	TICN	1	●	TSM	5115538	**587,00**
H5336016-UNJF1/2	TICN	1	●	TSM	5115539	**714,00**
H5551106-NPT1/2-3/4	TICN	1	●	TSM	5160614	**631,00**
H5551106-NPT1/4-3/8	TICN	1	●	TSM	5160615	**466,00**
H5551106-NPT1-2	TICN	1	●	TSM	5115561	**936,00**
H5551106-NPT1/16	TICN	1	●	TSM	5115565	**355,00**
H5551106-NPT1/8	TICN	1	●	TSM	5115564	**365,00**
H5651106-NPTF1/4-3/8	TICN	1	●	TSM	5115573	**466,00**
H5651106-NPTF1/2-3/4	TICN	1	●	TSM	5115574	**631,00**
H5651106-NPTF1-2	TICN	1	●	TSM	5115575	**936,00**
H5651106-NPTF1/16	TICN	1	●	TSM	5115560	**355,00**
H5651106-NPTF1/8	TICN	1	●	TSM	5115572	**365,00**
H602111-2		1	●	MS2	5083343	**69,60**
H602111-3		1	●	MS2	5083344	**69,60**
H602111-4		1	●	MS2	5083345	**72,10**
H602111-5		1	●	MS2	5083346	**72,10**
H602111-6		1	●	MS2	5083347	**72,10**
H602111-8		1	●	MS2	5083348	**90,90**
H602111-10		1	●	MS2	5083349	**125,00**

Bezeichnung / Designation	Sorte / Grade	VE / US		Disc. Gr.	Article No.	EURO Stück / piece
H602111-12		1	●	MS2	5083350	172,00
H602111-16		1	●	MS2	5083351	257,00
H602311-4		1	●	MS2	5530618[1]	64,40
H6023114-4	CRN	1	●	MS2	5530642[1]	75,70
H6023114-14	CRN	1	●	MS2	5530648[1]	221,00
H6023114-25	CRN	1	■	MS2	5530652[2]	568,00
H602411-2		1	●	MS2	5083354[1]	54,00
H602511-5		1	●	MS2	5083372[3]	55,80
H602551-6		1	●	MS2	5083380	83,70
H602551-8		1	●	MS2	5083381	109,00
H602551-10		1	●	MS2	5083382	178,00
H602551-12		1	●	MS2	5083383	252,00
H602551-16		1	●	MS2	5083384	430,00
H602551-20		1	●	MS2	5083385	654,00
H602641-2		1	●	MS2	5083386	49,60
H602641-3		1	●	MS2	5083387	49,60
H602641-4		1	●	MS2	5083388	54,20
H602641-5		1	●	MS2	5083389	54,20
H602641-6		1	●	MS2	5083390	54,20
H602641-8		1	●	MS2	5083391	71,00
H602641-10		1	●	MS2	5083392	112,00
H602641-12		1	●	MS2	5083393	143,00
H602641-16		1	●	MS2	5083394	258,00
H602641-20		1	●	MS2	5083395	392,00
H602681-2		1	●	MS2	5083396[3]	49,60
H602681-3		1	●	MS2	5083397[3]	49,60
H602681-4		1	●	MS2	5083398[3]	55,10
H602881-12-1.5		1	●	MS2	5083412[3]	157,00
H608411-10		1	●	MS2	5083432[1]	151,00
H608411-12		1	●	MS2	5083433[1]	196,00
H608411-16		1	●	MS2	5083435[1]	308,00
H608411-20		1	●	MS2	5083437[1]	486,00
H608771-16		1	●	MS2	5083442[1]	324,00
H608771-20		1	●	MS2	5083443[1]	510,00
H608871-6		1	●	MS2	5083452[1]	132,00
H608871-8		1	●	MS2	5083453[1]	165,00
H608871-10		1	●	MS2	5083454[1]	220,00
H608871-12		1	●	MS2	5083455[1]	278,00
H618911-6		1	●	MS2	5083467[1]	142,00
H618911-8		1	●	MS2	5083468[1]	153,00
H618911-12		1	●	MS2	5083470[1]	265,00
H618911-16		1	●	MS2	5083472[1]	416,00
H618911-20		1	●	MS2	5083474[1]	656,00
H6E2211-E10-10		1	●	MS5	5927040	55,20
H6E2211-E12-12		1	●	MS5	5927041	69,00
H6E2211-E16-16		1	●	MS5	5927042	107,00
H6E2211-E20-20		1	●	MS5	5927043	128,00
H6E2211-E25-25		1	●	MS5	5927044	159,00
H6E2511-E10-10		1	●	MS5	5627153	55,10
H6E2511-E12-12		1	●	MS5	5627154	69,00
H6E2511-E16-16		2	●	MS5	5627155	107,00
H7073417-16X50-3	ACN	1	●	MS2	5588253	338,00
H7073417-20X100-3	ACN	1	●	MS2	5588256	612,00
H7073417-25X125-3	ACN	1	●	MS2	5588258	846,00
H7073417-25X90-3	ACN	1	●	MS2	5588257	692,00
H7073417-20X55-3	ACN	1	●	MS2	5588255	500,00
H7073417-16X50	ACN	1	●	MS2	5337904	338,00
H7073417-16X90	ACN	1	●	MS2	5337905	413,00
H7073417-20X55	ACN	1	●	MS2	5337906	500,00
H7073417-20X100	ACN	1	●	MS2	5337907	612,00
H7073417-25X90	ACN	1	●	MS2	5337908	692,00
H7073417-25X125	ACN	1	●	MS2	5337909	846,00
H7073717-12-0.2	ACN	1	●	MS4	5337889	186,00
H7073717-16-0.2	ACN	1	●	MS4	5337892	295,00
H7073717-20-0.2	ACN	1	●	MS4	5337896	437,00
H7073717-16-2	ACN	1	●	MS4	5337893	295,00
H800111-1		1	■	MS2	5083483[2]	57,90
H800111-2		1	●	MS2	5083485	54,40
H800111-2.5		1	●	MS2	5083486	54,40
H800111-3		1	●	MS2	5083487	54,40

Bezeichnung / Designation	Sorte / Grade	VE / US		Disc. Gr.	Article No.	EURO Stück / piece
H800111-4		1	●	MS2	5083488	63,50
H800111-6		1	●	MS2	5083490	63,50
H800111-10		1	●	MS2	5083494	116,00
H8001119-2	DIA	1	●	MS2	5083519	135,00
H8001119-3	DIA	1	■	MS2	5083521[2]	135,00
H8001119-4	DIA	1	●	MS2	5083522	140,00
H8001919-4-40	DIA	1	●	MS4	5150753	199,00
H8001919-6-30	DIA	1	●	MS4	5150756	206,00
H8004028-5	TAX	1	●	MS4	5150765	125,00
H8004028-6	TAX	1	●	MS4	5150766	121,00
H8004028-8	TAX	1	●	MS4	5150767	167,00
H8004028-10	TAX	1	■	MS4	5150768[2]	236,00
H8004728-2-2.5-80	TAX	1	●	MS4	5150786	146,00
H8004728-1-2.5-80	TAX	1	●	MS4	5150781	140,00
H8004788-3-57	TAS	1	●	MS7	6016396	104,00
H8004788-3-70	TAS	1	●	MS7	6016397	135,00
H8004788-4-57	TAS	1	●	MS7	6016398	99,50
H8004788-4-70	TAS	1	●	MS7	6016399	129,00
H8004788-5-57	TAS	1	●	MS7	6016580	106,00
H8004788-6-57	TAS	1	●	MS7	6016582	107,00
H8004788-6-90	TAS	1	●	MS7	6016583	139,00
H8004788-8-63	TAS	1	●	MS7	6016584	153,00
H8004788-8-100	TAS	1	●	MS7	6016585	198,00
H8004788-10-72	TAS	1	●	MS7	6016586	190,00
H8004788-10-100	TAS	1	●	MS7	6016587	246,00
H8004788-12-83	TAS	1	●	MS7	6016588	260,00
H8004788-12-110	TAS	1	●	MS7	6016589	338,00
H8005728-5	TAX	1	●	MS4	5150798	157,00
H8005728-6	TAX	1	●	MS4	5150799	172,00
H8005828-2-0.2	TAX	1	●	MS4	5150808	146,00
H8005828-3-0.2	TAX	1	●	MS4	5150810	146,00
H8005828-3-0.3	TAX	1	●	MS4	5150811	146,00
H8005828-1	TAX	1	●	MS4	5150805	142,00
H8005828-1.2	TAX	1	●	MS4	5150806	142,00
H8005828-1.5	TAX	1	●	MS4	5150807	142,00
H8005928-3-0.5-19	TAX	1	●	MS4	5150813	157,00
H8006419-2	DIA	1	■	MS4	5150827[2]	188,00
H8006428-1	TAX	1	●	MS4	5150834	179,00
H8006428-2	TAX	1	●	MS4	5150835	152,00
H8006428-3	TAX	1	●	MS4	5150836	119,00
H8006428-4	TAX	1	●	MS4	5150837	130,00
H8006428-5	TAX	1	●	MS4	5150838	130,00
H8006428-6	TAX	1	●	MS4	5150839	130,00
H8006428-8	TAX	1	●	MS4	5150840	178,00
H8006428-10	TAX	1	●	MS4	5150841	233,00
H800891-2		1	●	MS4	5083707	116,00
H8008918-1.5	TAX	1	●	MS4	5083711	132,00
H8008918-2	TAX	1	●	MS4	5083712	133,00
H8011118-6	TAX	1	●	MS2	5083727	97,80
H8015728-6	TAX	1	●	MS4	5150858	170,00
H8015728-8	TAX	1	●	MS4	5150859	203,00
H8015728-16	TAX	1	■	MS4	5150862[2]	364,00
H8015828-6-0.2-24	TAX	1	●	MS4	5150868	143,00
H8015828-6-0.2-35	TAX	1	●	MS4	5150869	143,00
H8015828-10-0.3-35	TAX	1	●	MS4	5150877	219,00
H8015828-4-0.4-16	TAX	1	●	MS4	5150864	143,00
H8015828-4-0.4-24	TAX	1	●	MS4	5150865	143,00
H8015828-5-0.5-20	TAX	1	●	MS4	5150866	143,00
H8015828-6-0.5-24	TAX	1	●	MS4	5150870	143,00
H8015828-8-0.5-29	TAX	1	●	MS4	5150872	176,00
H8015828-5-0.5-30	TAX	1	●	MS4	5150867	143,00
H8015828-6-0.5-35	TAX	1	●	MS4	5150871	143,00
H8015828-10-0.5-35	TAX	1	●	MS4	5150878	219,00
H8015828-12-0.5-36	TAX	1	●	MS4	5150884	264,00
H8015828-8-0.5-43	TAX	1	●	MS4	5150873	176,00
H8015828-12-0.5-54	TAX	1	●	MS4	5150885	265,00
H8015828-10-0.5-59	TAX	1	●	MS4	5150879	218,00
H8015828-8-1.0-29	TAX	1	●	MS4	5150874	176,00
H8015828-10-1.0-35	TAX	1	●	MS4	5150880	219,00
H8015828-12-1.0-36	TAX	1	●	MS4	5150886	264,00

Bezeichnung / Designation	Sorte / Grade	VE / US		Disc. Gr.	Article No.	EURO Stück / piece
H8015828-8-1.0-43	TAX	1	●	MS4	5150875	**176,00**
H8015828-10-1.5-35	TAX	1	●	MS4	5150882	**219,00**
H8015828-12-1.5-36	TAX	1	●	MS4	5150888	**264,00**
H8015828-12-1.5-54	TAX	1	●	MS4	5150889	**265,00**
H8015828-12-2.0-36	TAX	1	●	MS4	5150890	**264,00**
H8015828-16-2.0-42	TAX	1	●	MS4	5150892	**294,00**
H8015828-12-2.0-54	TAX	1	●	MS4	5150891	**265,00**
H8016428-10	TAX	1	●	MS2	5150901*	**236,00**
H8016428-12	TAX	1	●	MS2	5150902*	**325,00**
H8074128-3	TAX	1	●	MS4	5150908	**139,00**
H8082228-16-1.5	TAX	1	●	MS4	5150930	**355,00**
H8082228-20-1.5	TAX	1	●	MS4	5150933	**524,00**
H8082228-16-2	TAX	1	●	MS4	5150931	**355,00**
H8095919-4-20	DIA	1	●	MS4	5150982	**191,00**
H8095919-4-30	DIA	1	●	MS4	5150983	**191,00**
H8095919-4-40	DIA	1	●	MS4	5150984	**191,00**
H8095919-5-50	DIA	1	●	MS4	5150986	**191,00**
H8095919-6-30	DIA	1	●	MS4	5150987	**199,00**
H8095919-6-45	DIA	1	●	MS4	5150988	**199,00**
H8095919-6-60	DIA	1	●	MS4	5150989	**200,00**
H8095919-8-40	DIA	1	●	MS4	5150990	**268,00**
H8095919-8-60	DIA	1	●	MS4	5150991	**268,00**
H8095919-8-80	DIA	1	●	MS4	5150992	**267,00**
H8095919-10-50	DIA	1	●	MS4	5150993	**310,00**
H8095919-12-60	DIA	1	●	MS4	5150996	**378,00**
H8E01118-E10-10	TAX	1	●	MS5	5927033	**58,40**
H8E01118-E12-12	TAX	1	●	MS5	5927034	**73,00**
H8E01118-E16-16	TAX	1	●	MS5	5927035	**113,00**
H8E01118-E20-20	TAX	1	●	MS5	5927036	**135,00**
H8E11118-E10-10	TAX	1	●	MS5	5627127	**67,60**
H8E11118-E12-12	TAX	1	●	MS5	5627128	**85,10**
H8E11118-E16-16	TAX	1	●	MS5	5627129	**132,00**
H8E11118-E20-20	TAX	1	●	MS5	5627130	**157,00**
H8E11118-E25-25	TAX	1	●	MS5	5627131	**195,00**
H901411-6		1	●	MS2	5083981	**60,70**
H901411-8		1	●	MS2	5083982	**79,40**
H901411-12		1	●	MS2	5083984	**159,00**
H901451-3		1	●	MS2	5083993	**53,40**
H901451-4		1	●	MS2	5083994	**60,70**
H901451-5		1	●	MS2	5083995	**60,70**
H901451-6		1	●	MS2	5083996	**60,70**
H901451-8		1	●	MS2	5083997	**79,40**
H901451-10		1	●	MS2	5083998	**112,00**
HA06-C3-032-075		1	●	070	8463578	**485,00**
HA06-C4-040-080		1	●	070	8463579	**511,00**
HA06-C5-050-090		1	●	070	8463580	**539,00**
HA10-C3-032-080		1	●	070	8463581	**485,00**
HA10-C4-040-090		1	●	070	8463582	**568,00**
HA10-C5-050-100		1	●	070	8463583	**599,00**
HA10-C6-063-110		1	●	070	8463584	**629,00**
HA10-C8-080-120		1	●	070	8463585	**684,00**
I12L90-2.5D-GX09		1	●	060	5009526	**184,00**
I12R90-2.5D-GX09		1	●	060	5009527	**184,00**
ISO2936-0,9		1	●	095	5927144	**3,88**
ISO2936-1,3		1	●	095	5008430	**3,88**
ISO2936-1,5		1	●	095	5008431	**3,88**
ISO2936-10		1	●	095	7714737	**3,88**
ISO2936-12		1	●	095	7847656	**4,74**
ISO2936-14		1	●	095	7847657	**7,98**
ISO2936-17		1	●	095	7847658	**14,21**
ISO2936-2		1	●	095	5837265	**3,88**
ISO2936-2,5		1	●	095	5617470	**3,88**
ISO2936-3		1	●	095	5617471	**3,88**
ISO2936-3,5		1	●	095	6824144	**3,88**
ISO2936-4		1	●	095	5617472	**3,88**
ISO2936-5		1	●	095	5653710	**3,88**
ISO2936-6		1	●	095	5875491	**3,88**
ISO2936-7		1	●	095	5927143	**3,88**
ISO2936-8		1	●	095	5008434	**3,88**
K1111-0.5		1	●	DHK	5073514	**12,16**

Bezeichnung / Designation	Sorte / Grade	VE / US		Disc. Gr.	Article No.	EURO Stück / piece
K1111-0.8		1	●	DHK	5073515	**11,47**
K1111-1		1	●	DHK	5073516	**10,59**
K1111-1.25		1	●	DHK	5073517	**10,74**
K1111-1.6		1	●	DHK	5073518	**9,51**
K1111-2		1	●	DHK	5073521	**10,36**
K1111-2.5		1	●	DHK	5073522	**12,03**
K1111-3.15		1	●	DHK	5073523	**13,76**
K1111-4		1	●	DHK	5073524	**23,92**
K1111-5		1	●	DHK	5073525	**35,20**
K1111-6.3		1	●	DHK	5073526	**51,30**
K1111-8		1	●	DHK	5073527	**81,20**
K1111-10		1	●	DHK	5073519	**162,00**
K1111-12.5		1	●	DHK	5073520	**245,00**
K1111TIN-1	TIN	1	●	DHK	5073528	**24,89**
K1111TIN-1.25	TIN	1	●	DHK	5073529	**25,50**
K1111TIN-1.6	TIN	1	●	DHK	5073530	**22,05**
K1111TIN-2	TIN	1	●	DHK	5073531	**23,92**
K1111TIN-2.5	TIN	1	●	DHK	5073532	**28,20**
K1111TIN-3.15	TIN	1	●	DHK	5073533	**32,30**
K1111TIN-4	TIN	1	●	DHK	5073534	**56,40**
K1111TIN-5	TIN	1	●	DHK	5073535	**81,70**
K1112-1.6		1	●	DHK	5073536	**12,80**
K1112-2		1	●	DHK	5073537	**13,34**
K1112-2.5		1	●	DHK	5073538	**15,20**
K1112-3.15		1	●	DHK	5073539	**17,95**
K1112-4		1	●	DHK	5073540	**29,00**
K1112-5		1	●	DHK	5073541	**43,00**
K1113-0.5		1	●	DHK	5073542	**12,16**
K1113-0.8		1	●	DHK	5073543	**11,47**
K1113-1		1	●	DHK	5073544	**10,41**
K1113-1.25		1	●	DHK	5073545	**10,59**
K1113-1.6		1	●	DHK	5073546	**9,51**
K1113-2		1	●	DHK	5073549	**10,36**
K1113-2.5		1	●	DHK	5073550	**12,03**
K1113-3.15		1	●	DHK	5073551	**13,76**
K1113-4		1	●	DHK	5073552	**22,32**
K1113-5		1	●	DHK	5073553	**34,20**
K1113-6.3		1	●	DHK	5073554	**51,30**
K1113-8		1	●	DHK	5073555	**81,20**
K1113-10		1	●	DHK	5073547	**162,00**
K1113TIN-1	TIN	1	●	DHK	5073556	**23,60**
K1113TIN-1.25	TIN	1	●	DHK	5073557	**23,60**
K1113TIN-1.6	TIN	1	●	DHK	5073558	**21,70**
K1113TIN-2	TIN	1	●	DHK	5073559	**23,60**
K1113TIN-2.5	TIN	1	●	DHK	5073560	**28,20**
K1113TIN-3.15	TIN	1	●	DHK	5073561	**32,30**
K1113TIN-4	TIN	1	●	DHK	5073562	**52,40**
K1113TIN-5	TIN	1	●	DHK	5073563	**80,70**
K1114-2		1	●	DHK	5073565	**13,34**
K1114-2.5		1	●	DHK	5073566	**15,20**
K1114-3.15		1	●	DHK	5073567	**17,46**
K1114-4		1	●	DHK	5073568	**30,10**
K1114-5		1	●	DHK	5073569	**43,00**
K1131-0.5		1	●	DHK	5073570	**16,21**
K1131-0.8		1	●	DHK	5073571	**15,92**
K1131-1		1	●	DHK	5073572	**14,60**
K1131-1.25		1	●	DHK	5073573	**15,20**
K1131-1.6		1	●	DHK	5073574	**14,96**
K1131-2		1	●	DHK	5073575	**16,56**
K1131-2.5		1	●	DHK	5073576	**17,95**
K1131-3.15		1	●	DHK	5073577	**20,11**
K1131-4		1	●	DHK	5073578	**30,40**
K1131-5		1	●	DHK	5073579	**47,30**
K1131-6.3		1	●	DHK	5073580	**70,40**
K1161-0.5		1	●	DS2	5073587	**42,10**
K1161-0.8		1	●	DS2	5073588	**42,10**
K1161-1		1	●	DS2	5073589	**42,10**
K1161-1.25		1	●	DS2	5073590	**42,10**
K1161-1.6		1	●	DS2	5073591	**44,30**
K1161-2		1	●	DS2	5073592	**47,70**

Bezeichnung / Designation	Sorte / Grade	VE / US		Disc. Gr.	Article No.	EURO Stück / piece
K1161-2.5		1	●	DS2	5073593	55,30
K1161-3.15		1	●	DS2	5073594	67,60
K1161-4		1	●	DS2	5073595	82,10
K1161-5		1	●	DS2	5073596	121,00
K1161-6.3		1	●	DS2	5073597	175,00
K1161XPL-0.5	XPL	1	●	DS2	6250911	47,00
K1161XPL-0.8	XPL	1	●	DS2	6250912	47,00
K1161XPL-1	XPL	1	●	DS2	6250913	47,00
K1161XPL-1.25	XPL	1	●	DS2	6250914	47,00
K1161XPL-1.6	XPL	1	●	DS2	6250915	49,40
K1161XPL-2	XPL	1	●	DS2	6250916	53,30
K1161XPL-2.5	XPL	1	●	DS2	6250917	61,70
K1161XPL-3.15	XPL	1	●	DS2	6250918	75,40
K1161XPL-4	XPL	1	●	DS2	6250919	91,60
K1161XPL-5	XPL	1	●	DS2	6250950	135,00
K1161XPL-6.3	XPL	1	●	DS2	6250951	195,00
K12-480		1	●	095	5013389	3,64
K1215-1		1	●	DHK	5073598	16,56
K1215-1.25		1	●	DHK	5073599	17,16
K1215-1.6		1	●	DHK	5073600	17,46
K1215-2		1	●	DHK	5073602	19,13
K1215-2.5		1	●	DHK	5073603	22,68
K1215-3.15		1	●	DHK	5073604	30,10
K1215-4		1	●	DHK	5073605	43,60
K1215-5		1	●	DHK	5073606	55,90
K1215-6.3		1	●	DHK	5073607	80,10
K1215-8		1	●	DHK	5073608	157,00
K1215-10		1	●	DHK	5073601	308,00
K1311-0.63		1	●	DHK	5073618	14,03
K1311-0.75		1	●	DHK	5073619	13,38
K1311-1		1	●	DHK	5073620	11,68
K1311-1.5		1	●	DHK	5073621	11,47
K1311-1.6		1	●	DHK	5073622	17,57
K1311-2		1	●	DHK	5073623	12,62
K1311-2.5		1	●	DHK	5073624	19,54
K1311-3		1	●	DHK	5073626	19,78
K1311-3.15		1	●	DHK	5073627	27,40
K1311-4		1	●	DHK	5073629	28,20
K1311-5		1	●	DHK	5073630	46,80
K1311-6		1	●	DHK	5073631	70,40
K1313-1		1	●	DHK	5073632	11,68
K1313-1.5		1	●	DHK	5073633	11,47
K1313-2		1	●	DHK	5073634	12,62
K1313-2.5		1	●	DHK	5073635	19,54
K1313-3		1	●	DHK	5073636	19,78
K1313-4		1	●	DHK	5073637	28,20
K1411L-2X5		1	●	DHK	5073639	104,00
K1411L-2.5X6.3		1	●	DHK	5073638	102,00
K1411L-3.15X8		1	●	DHK	5073640	102,00
K1411L-4X10		1	●	DHK	5073641	102,00
K1411M-0.75X3.5		1	●	DHK	5073642	29,60
K1411M-1X4		1	●	DHK	5073644	26,70
K1411M-1.5X5		1	●	DHK	5073643	23,92
K1411M-2X6		1	●	DHK	5073646	23,92
K1411M-2.5X8		1	●	DHK	5073645	29,60
K1411M-3X8		1	●	DHK	5073648	34,70
K1411M-4X10		1	●	DHK	5073649	56,40
K1411S-0.75X3.5		1	●	DHK	5073651	15,01
K1411S-1X4		1	●	DHK	5073653	15,31
K1411S-1.5X5		1	●	DHK	5073652	16,32
K1411S-2X6		1	●	DHK	5073655	16,32
K1411S-2.5X8		1	●	DHK	5073654	19,54
K1411S-3X8		1	●	DHK	5073657	19,54
K1411S-4X10		1	●	DHK	5073658	25,20
K1411S-5X14		1	●	DHK	5073660	83,30
K18-000248		1	●	095	5006428	3,55
K1811-NO.0		1	●	DHK	5169913	11,64
K1811-NO.00		1	●	DHK	5073661	12,16
K1811-NO8		1	●	DHK	5073669	82,80
K1811-NO7		1	●	DHK	5073668	53,00

Bezeichnung / Designation	Sorte / Grade	VE / US		Disc. Gr.	Article No.	EURO Stück / piece
K1811-NO6		1	●	DHK	5073667	44,40
K1811-NO5		1	●	DHK	5073666	37,70
K1811-NO4		1	●	DHK	5073665	14,03
K1811-NO3		1	●	DHK	5073664	12,03
K1811-NO2		1	●	DHK	5073663	9,70
K1811-NO1		1	●	DHK	5073662	10,36
K1911-BS7		1	●	DHK	5073676	72,60
K1911-BS1		1	●	DHK	5073670	6,78
K1911-BS6		1	●	DHK	5073675	45,80
K1911-BS5		1	●	DHK	5073674	20,96
K1911-BS2		1	●	DHK	5073671	7,90
K1911-BS4		1	●	DHK	5073673	12,07
K1911-BS3		1	●	DHK	5073672	9,57
K2031407-M3	TAFT	1	●	THP	6476195	44,50
K2031407-M4	TAFT	1	●	THP	6476196	41,40
K2031407-M5	TAFT	1	●	THP	6476197	44,50
K2031407-M6	TAFT	1	●	THP	6476198	50,90
K2031407-M8	TAFT	1	●	THP	6476199	66,80
K2031407-M10	TAFT	1	●	THP	6476200	80,10
K2036407-M12	TAFT	1	●	THP	6476201	93,50
K2036407-M14	TAFT	1	●	THP	6476202	107,00
K2036407-M16	TAFT	1	●	THP	6476203	120,00
K2036407-M20	TAFT	1	●	THP	6476204	160,00
K21-110		1	●	095	5006492	45,50
K24-101		1	●	095	5006195	3,64
K24-102		1	●	095	5020719	3,64
K24-111		1	●	095	5006204	3,64
K24-115		1	●	095	5017373	3,64
K24-117		1	●	095	5006206	3,64
K3T		1	●	095	5006947	4,72
K5191TFT-4	TFT	1	●	DS8	5565045	128,00
K5191TFT-5	TFT	1	●	DS8	5565046	128,00
K5191TFT-6	TFT	1	●	DS8	5565047	128,00
K5191TFT-7	TFT	1	●	DS8	5565048	152,00
K601.01.150-SET		1	●	095	6470259	80,50
K601.01.250-SET		1	●	095	6470304	85,80
K601.01.300-SET		1	●	095	6470306	88,00
K601.02.150-SET		1	●	095	6470307	85,80
K601.02.250-SET		1	●	095	6470308	91,90
K601.02.300-SET		1	●	095	6470309	93,00
K601.03.150-SET		1	●	095	6470321	102,00
K601.03.250-SET		1	●	095	6470322	105,00
K601.03.300-SET		1	●	095	6470323	109,00
KN101		1	●	095	5008461	17,53
KN102		1	●	095	5008462	18,34
KN103		1	●	095	5008463	19,46
KN104		1	●	095	5008464	18,57
KN106		1	●	095	5008466	26,90
KN107		1	●	095	5008467	36,60
KN108		1	●	095	5008489	18,34
KN109		1	●	095	5008490	18,34
KN110		1	●	095	5008499	17,53
KN111		1	●	095	5008500	17,53
KN112		1	●	095	5837658	17,53
KN113		1	●	095	5837711	17,53
KN114		1	●	095	5008503	17,53
KN115		1	●	095	5008504	17,53
KN116		1	●	095	5008505	17,53
KN117		1	●	095	5008506	17,53
KN118		1	●	095	5008666	17,53
KN119		1	●	095	5008675	18,34
KN120		1	●	095	5008676	18,34
KN121		1	●	095	5616820	12,55
KN122		1	●	095	5837342	18,34
KN123		1	●	095	5837345	5,65
KN124		1	●	095	5837347	27,50
KN125		1	●	095	6016390	18,34
KN126		1	●	095	6138342	8,79
KN127		1	●	095	6138343	14,10
KN128		1	●	095	6262344	18,34

Bezeichnung / Designation	Sorte / Grade	VE / US		Disc. Gr.	Article No.	EURO Stück / piece
KN129		1	●	095	7967939	13,67
KN130		1	●	095	7968100	14,78
LCGX050203-E77	WN15	10	●	019	8272939	10,74
LCGX050203-E77	WNN15	10	●	019	8087903	15,15
LCGX06T204-E77	WN15	10	●	019	8272940	10,74
LCGX06T204-E77	WNN15	10	●	019	8087904	15,15
LCMX050203-B57	WKP25S	10	●	016	6864082	13,11
LCMX050203-B57	WKP35S	10	●	016	6864086	13,11
LCMX050203-B57	WSP45G	10	●	016	7969105	13,77
LCMX050203-B57	WXP40	10	●	016	5020940	12,12
LCMX050203-D57	WKP25S	10	●	016	6864028	13,11
LCMX050203-D57	WKP35S	10	●	016	6864087	13,11
LCMX050203-D57	WSP45G	10	●	016	7969107	13,77
LCMX050203-D57	WXP40	10	●	016	5020941	12,12
LCMX050203-E57	WKP25S	10	●	016	6864029	13,11
LCMX050203-E57	WKP35S	10	●	016	6864088	13,11
LCMX050203-E57	WSP45G	10	●	016	7969109	13,77
LCMX050203-E57	WXP40	10	●	016	5020942	12,12
LCMX06T204-B57	WKP25S	10	●	016	6864083	13,11
LCMX06T204-B57	WKP35S	10	●	016	6864089	13,11
LCMX06T204-B57	WSP45G	10	●	016	7969106	13,77
LCMX06T204-B57	WXP40	10	●	016	5020943	12,12
LCMX06T204-D57	WKP25S	10	●	016	6864080	13,11
LCMX06T204-D57	WKP35S	10	●	016	6864090	13,11
LCMX06T204-D57	WSP45G	10	●	016	7969108	13,77
LCMX06T204-D57	WXP40	10	●	016	5020944	12,12
LCMX06T204-E57	WKP25S	10	●	016	6864081	13,11
LCMX06T204-E57	WKP35S	10	●	016	6864091	13,11
LCMX06T204-E57	WSP45G	10	●	016	7969170	13,77
LCMX06T204-E57	WXP40	10	●	016	5020945	12,12
LDMT08T204R-D51	WKP25S	10	●	009	6796112	14,33
LDMT08T204R-D51	WKP35G	10	●	009	7170542	17,20
LDMT08T204R-D51	WKP35S	10	●	009	6796113	14,33
LDMT08T204R-D51	WSP45G	10	●	009	8201915	15,05
LDMT08T204R-D51	WSP45S	10	■	009	6796114[1]	15,05
LDMT08T204R-D57	WKP25S	10	●	009	6796115	14,33
LDMT08T204R-D57	WKP35G	10	●	009	7170503	17,20
LDMT08T204R-D57	WKP35S	10	●	009	6796116	14,33
LDMT08T204R-D57	WSP45G	10	●	009	8201916	15,05
LDMT08T204R-D57	WSP45S	10	■	009	6796118[1]	15,05
LDMT08T204R-F57	WKP25S	10	●	009	6796121	14,33
LDMT08T204R-F57	WKP35G	10	●	009	7170540	17,20
LDMT08T204R-F57	WKP35S	10	●	009	6796122	14,33
LDMT08T204R-F57	WSP45G	10	●	009	8201917	15,05
LDMT08T204R-F57	WSP45S	10	■	009	6796124[1]	15,05
LDMT14T308R-D51	WKP25S	10	●	009	6796131	14,98
LDMT14T308R-D51	WKP35G	10	●	009	7170604	17,99
LDMT14T308R-D51	WKP35S	10	●	009	6796132	14,98
LDMT14T308R-D51	WSP45G	10	●	009	8112854	15,74
LDMT14T308R-D57	WKK25G	10	●	009	8441388	15,74
LDMT14T308R-D57	WKK25S	10	●	009	6796138	15,74
LDMT14T308R-D57	WKP25S	10	●	009	6796134	14,98
LDMT14T308R-D57	WKP35G	10	●	009	7170514	17,99
LDMT14T308R-D57	WKP35S	10	●	009	6796135	14,98
LDMT14T308R-D57	WSM35G	10	●	009	8441410	15,74
LDMT14T308R-D57	WSM35S	10	●	009	6796136	15,74
LDMT14T308R-D57	WSP45G	10	●	009	8112855	15,74
LDMT14T308R-F57	WKP25S	10	●	009	6796140	14,98
LDMT14T308R-F57	WKP35G	10	●	009	7170567	17,99
LDMT14T308R-F57	WKP35S	10	●	009	6796141	14,98
LDMT14T308R-F57	WSM35G	10	●	009	8441285	15,74
LDMT14T308R-F57	WSM35S	10	●	009	6796142	15,74
LDMT14T308R-F57	WSP45G	10	●	009	8112856	15,74
LDMT170408R-D51	WKP35G	10	●	009	7169066	25,20
LDMT170408R-D51	WKP35S	10	●	009	6796147	20,98
LDMT170408R-D51	WSP45G	10	●	009	8112857	22,03
LDMT170408R-D57	WKK25G	10	●	009	8441367	22,03
LDMT170408R-D57	WKK25S	10	●	009	6796153	22,03
LDMT170408R-D57	WKP25S	10	●	009	6796149	20,98
LDMT170408R-D57	WKP35G	10	●	009	7170544	25,20

Bezeichnung / Designation	Sorte / Grade	VE / US		Disc. Gr.	Article No.	EURO Stück / piece
LDMT170408R-D57	WKP35S	10	●	009	6796150	20,98
LDMT170408R-D57	WSP45G	10	●	009	8112858	22,03
LDMT170408R-F57	WKP25S	10	●	009	6796155	20,98
LDMT170408R-F57	WKP35G	10	●	009	7170556	25,20
LDMT170408R-F57	WKP35S	10	●	009	6796156	20,98
LDMT170408R-F57	WSM35G	10	●	009	8441401	22,03
LDMT170408R-F57	WSM35S	10	●	009	6796157	22,03
LDMT170408R-F57	WSP45G	10	●	009	8112859	22,03
LDMT170412R-D51	WKP35G	10	●	009	7651466	25,20
LDMT170412R-D51	WSP45G	10	●	009	8201918	22,03
LDMW08T204R-A57	WKP25S	10	●	009	6796110	14,33
LDMW08T204R-A57	WKP35G	10	●	009	7170504	17,20
LDMW14T308R-A57	WKP35G	10	●	009	7170562	17,99
LDMW170408R-A57	WKP35G	10	●	009	7170537	25,20
LNGX130708R-L55	WAK15	10	●	004	5045331	22,86
LNGX130708R-L55	WKK25G	10	●	004	8284855	24,01
LNGX130708R-L55	WKK25S	10	■	004	6702079[1]	24,01
LNGX130708R-L55	WKP25S	10	●	004	6068881	22,86
LNGX130708R-L55	WKP35G	10	●	004	7170615	27,40
LNGX130708R-L55	WKP35S	10	●	004	5886991	22,86
LNGX130708R-L55	WSM35G	10	●	004	8284988	24,01
LNGX130708R-L55	WSM35S	10	■	004	6159467[1]	24,01
LNGX130708R-L55	WSP45G	10	●	004	7924230	24,01
LNGX130708R-L88	WK10	10	●	004	5535309	17,01
LNGX130708R-L88	WXN15	10	●	004	5535411	22,86
LNGX130712R-L55	WKP25S	10	●	004	6068958	22,86
LNGX130712R-L55	WKP35G	10	●	004	7170588	27,40
LNGX130712R-L55	WKP35S	10	●	004	5886996	22,86
LNGX130712R-L55	WSM35G	10	●	004	8284989	24,01
LNGX130712R-L55	WSM35S	10	■	004	7058511[1]	24,01
LNGX130712R-L55	WSP45G	10	●	004	8112860	24,01
LNGX130716R-L55	WKP25S	10	●	004	6068959	22,86
LNGX130716R-L55	WKP35G	10	●	004	7170541	27,40
LNGX130716R-L55	WKP35S	10	●	004	5886997	22,86
LNGX130716R-L55	WSP45G	10	●	004	8112861	24,01
LNGX130720R-L55	WKP25S	10	●	004	6068960	22,86
LNGX130720R-L55	WKP35G	10	●	004	7170558	27,40
LNGX130720R-L55	WKP35S	10	●	004	5886998	22,86
LNGX130720R-L55	WSP45G	10	●	004	8112862	24,01
LNGX130725R-L55	WKP25S	10	●	004	6068965	22,86
LNGX130725R-L55	WKP35G	10	●	004	7170517	27,40
LNGX130725R-L55	WSM35S	10	●	004	7058514[2]	24,01
LNGX130730R-L55	WKP25S	10	●	004	6068967	22,86
LNGX130730R-L55	WKP35G	10	●	004	7170534	27,40
LNGX130730R-L55	WKP35S	10	●	004	5887010	22,86
LNHU080304-B57T	WKK25G	10	●	004	8441377	34,80
LNHU080304-B57T	WKK25S	10	●	004	6702080	34,80
LNHU080304-B57T	WKP35G	10	●	004	7347270	39,80
LNHU080304-B57T	WKP35S	10	●	004	5887855	33,10
LNHU080304-F57T	WKP25S	10	●	004	6072454	33,10
LNHU080304-F57T	WKP35G	10	●	004	7347271	39,80
LNHU080304-F57T	WKP35S	10	●	004	5887856	33,10
LNHU080304-F57T	WSM35G	10	●	004	8284990	34,80
LNHU080304-F57T	WSM35S	10	■	004	7058515[1]	34,80
LNHU080304-F57T	WSP45G	10	●	004	8112863	34,80
LNHU080404-B57T	WKK25G	10	●	004	8441365	34,80
LNHU080404-B57T	WKK25S	10	●	004	6702081	34,80
LNHU080404-B57T	WKP35G	10	●	004	7347272	39,80
LNHU080404-B57T	WKP35S	10	●	004	5887933	33,10
LNHU080404-F57T	WKP25S	10	●	004	6072455	33,10
LNHU080404-F57T	WKP35G	10	●	004	7347274	39,80
LNHU080404-F57T	WKP35S	10	●	004	5887935	33,10
LNHU080404-F57T	WSM35G	10	●	004	8284991	34,80
LNHU080404-F57T	WSM35S	10	■	004	7058516[1]	34,80
LNHU080404-F57T	WSP45G	10	●	004	8112864	34,80
LNHU090404R-L55T	WAK15	10	●	004	6192225	27,50
LNHU090404R-L55T	WKK25G	10	●	004	8284860	28,90
LNHU090404R-L55T	WKK25S	10	■	004	6702082[1]	28,90
LNHU090404R-L55T	WKP25S	10	●	004	6192332	27,50
LNHU090404R-L55T	WKP35G	10	●	004	7169064	33,00

Bezeichnung / Designation	Sorte / Grade	VE / US		Disc. Gr.	Article No.	EURO Stück / piece
LNHU090404R-L55T	WKP35S	10	●	004	6015626	27,50
LNHU090404R-L55T	WSM35G	10	●	004	8284992	28,90
LNHU090404R-L55T	WSM35S	10	■	004	6192364*	28,90
LNHU090404R-L55T	WSP45G	10	●	004	7924231	28,90
LNHU090404R-L65T	WSP45G	10	●	004	7924232	28,90
LNHU090404R-L85T	WK10	10	●	004	6192401	20,58
LNHU090404R-L85T	WXN15	10	●	004	6192369	27,50
LNHU090408R-L55T	WKK25G	10	●	004	8284859	28,90
LNHU090408R-L55T	WKK25S	10	■	004	6702083*	28,90
LNHU090408R-L55T	WKP25S	10	●	004	6823567	27,50
LNHU090408R-L55T	WKP35G	10	●	004	7170599	33,00
LNHU090408R-L55T	WKP35S	10	●	004	6192402	27,50
LNHU090408R-L55T	WSM35G	10	●	004	8284993	28,90
LNHU090408R-L55T	WSM35S	10	■	004	6192403*	28,90
LNHU090408R-L55T	WSP45G	10	●	004	7924233	28,90
LNHU090412R-L55T	WKP35G	10	●	004	7170555	33,00
LNHU090412R-L55T	WKP35S	10	●	004	6192404	27,50
LNHU090412R-L55T	WSM35G	10	●	004	8284994	28,90
LNHU090412R-L55T	WSM35S	10	■	004	6192405*	28,90
LNHU090412R-L55T	WSP45G	10	●	004	8112865	28,90
LNHU090416R-L55T	WKP35G	10	●	004	7170523	33,00
LNHU090416R-L55T	WKP35S	10	●	004	6192407	27,50
LNHU090416R-L55T	WSM35G	10	●	004	8284995	28,90
LNHU090416R-L55T	WSM35S	10	■	004	6192408*	28,90
LNHU090416R-L55T	WSP45G	10	●	004	8112866	28,90
LNHU090420R-L55T	WKP35G	10	●	004	7170525	33,00
LNHU090420R-L55T	WKP35S	10	●	004	6192409	27,50
LNHU090420R-L55T	WSM35G	10	●	004	8284996	28,90
LNHU090420R-L55T	WSM35S	10	■	004	6192450*	28,90
LNHU090420R-L55T	WSP45G	10	●	004	8112867	28,90
LNHU100508-B57T	WKK25G	10	●	004	8441366	38,30
LNHU100508-B57T	WKK25S	10	●	004	6702084	38,30
LNHU100508-B57T	WKP35G	10	●	004	7347276	43,80
LNHU100508-B57T	WKP35S	10	●	004	5887938	36,50
LNHU100508-F57T	WKP25S	10	●	004	6072456	36,50
LNHU100508-F57T	WKP35G	10	●	004	7347277	43,80
LNHU100508-F57T	WKP35S	10	●	004	5887939	36,50
LNHU100508-F57T	WSM35G	10	●	004	8284997	38,30
LNHU100508-F57T	WSM35S	10	■	004	7058517*	38,30
LNHU100508-F57T	WSP45G	10	●	004	8112868	38,30
LNHU120608-B57T	WKK25G	10	●	004	8284874	40,10
LNHU120608-B57T	WKK25S	10	■	004	6702085*	40,10
LNHU120608-B57T	WKP35G	10	●	004	7347279	45,80
LNHU120608-B57T	WKP35S	10	●	004	5887982	38,20
LNHU120608-F57T	WKP25S	10	●	004	6072459	38,20
LNHU120608-F57T	WKP35G	10	●	004	7347281	45,80
LNHU120608-F57T	WKP35S	10	●	004	5887983	38,20
LNHU120608-F57T	WSM35G	10	●	004	8441387	40,10
LNHU120608-F57T	WSM35S	10	●	004	7058518	40,10
LNHU120608-F57T	WSP45G	10	●	004	8112869	40,10
LNHU130608R-L55T	WAK15	10	●	004	6192470	30,10
LNHU130608R-L55T	WKK25G	10	●	004	8284699	31,60
LNHU130608R-L55T	WKK25S	10	■	004	6702086*	31,60
LNHU130608R-L55T	WKP25S	10	●	004	6192471	30,10
LNHU130608R-L55T	WKP35G	10	●	004	7169069	36,10
LNHU130608R-L55T	WKP35S	10	●	004	6192472	30,10
LNHU130608R-L55T	WSM35G	10	●	004	8284998	31,60
LNHU130608R-L55T	WSM35S	10	■	004	6190495*	30,80
LNHU130608R-L55T	WSP45G	10	●	004	7924234	31,60
LNHU130608R-L65T	WSP45G	10	●	004	7924235	31,60
LNHU130608R-L85T	WK10	10	●	004	6192475	22,55
LNHU130608R-L85T	WXN15	10	●	004	6192474	30,10
LNHU130612R-L55T	WKP35G	10	●	004	7170573	36,10
LNHU130612R-L55T	WKP35S	10	●	004	6192807	30,10
LNHU130612R-L55T	WSM35G	10	●	004	8284999	31,60
LNHU130612R-L55T	WSM35S	10	■	004	6192808*	31,60
LNHU130612R-L55T	WSP45G	10	●	004	7924236	31,60
LNHU130616R-L55T	WKP35G	10	●	004	7170582	36,10
LNHU130616R-L55T	WKP35S	10	●	004	6192809	30,10
LNHU130616R-L55T	WSM35G	10	●	004	8285000	31,60

Bezeichnung / Designation	Sorte / Grade	VE / US		Disc. Gr.	Article No.	EURO Stück / piece
LNHU130616R-L55T	WSM35S	10	■	004	6192842*	31,60
LNHU130616R-L55T	WSP45G	10	●	004	7924237	31,60
LNHU130620R-L55T	WKP35G	10	●	004	7170535	36,10
LNHU130620R-L55T	WKP35S	10	●	004	6192840	30,10
LNHU130620R-L55T	WSM35G	10	●	004	8285001	31,60
LNHU130620R-L55T	WSM35S	10	■	004	6192841*	31,60
LNHU130620R-L55T	WSP45G	10	●	004	7924239	31,60
LNHU130625R-L55T	WKP35G	10	●	004	7170520	36,10
LNHU130625R-L55T	WKP35S	10	●	004	6192843	30,10
LNHU130625R-L55T	WSM35G	10	●	004	8441378	31,60
LNHU130625R-L55T	WSM35S	10	●	004	6192844	31,60
LNHU130625R-L55T	WSP45G	10	●	004	8112870	31,60
LNHU130630R-L55T	WKP35G	10	●	004	7170512	36,10
LNHU130630R-L55T	WKP35S	10	●	004	6192845	30,10
LNHU130630R-L55T	WSM35G	10	●	004	8285002	31,60
LNHU130630R-L55T	WSM35S	10	■	004	6192846*	31,60
LNHU130630R-L55T	WSP45G	10	●	004	7924240	31,60
LNHU130632R-L55T	WKP35G	10	●	004	7170519	36,10
LNHU130632R-L55T	WKP35S	10	●	004	6192848	30,10
LNHU130632R-L55T	WSM35G	10	●	004	8285003	31,60
LNHU130632R-L55T	WSM35S	10	■	004	6192849*	31,60
LNHU130632R-L55T	WSP45G	10	●	004	8112871	31,60
LNHU160708R-L55T	WKK25G	10	●	004	8284891	34,30
LNHU160708R-L55T	WKK25S	10	■	004	6702087*	34,30
LNHU160708R-L55T	WKP25S	10	●	004	6276382	32,70
LNHU160708R-L55T	WKP35G	10	●	004	7170543	39,20
LNHU160708R-L55T	WKP35S	10	●	004	6369555	32,70
LNHU160708R-L55T	WSM35G	10	●	004	8285004	34,30
LNHU160708R-L55T	WSM35S	10	■	004	6349126*	34,30
LNHU160708R-L55T	WSP45G	10	●	004	7924241	34,30
LNHU160708R-L85T	WK10	10	●	004	6348403	24,51
LNHU160712R-L55T	WKP35G	10	●	004	7170515	39,20
LNHU160712R-L55T	WKP35S	10	●	004	6351834	32,70
LNHU160712R-L55T	WSP45G	10	●	004	8112872	34,30
LNHU160716R-L55T	WSP45G	10	●	004	8201919	34,30
LNHU160812-F57T	WKP25S	10	●	004	6072480	41,50
LNHU160812-F57T	WKP35S	10	●	004	5887987	41,50
LNHU160812-F57T	WSM35G	10	●	004	8441371	43,50
LNHU160812-F57T	WSM35S	10	●	004	7058519	43,50
LNHU160812-F57T	WSP45G	10	●	004	8112873	43,50
LNHX070204-F57T	WKP35S	10	●	004	5887852	29,80
LNHX070204-F57T	WSM35G	10	●	004	8285005	31,30
LNHX070204-F57T	WSM35S	10	■	004	7058520*	31,30
LNHX070204-F57T	WSP45G	10	●	004	8201920	31,30
LNHX070204-F57T	WSP45S	10	■	004	7057760*	31,30
LNHX0904PDR-L55T	WAK15	10	●	004	6796201	28,90
LNHX0904PDR-L55T	WHH15X	10	●	004	7960068	31,80
LNHX120604R-L65T	WSM45X	10	●	004	6948599	38,20
LNHX120604R-L65T	WSP45G	10	●	004	7924242	31,60
LNHX120604R-L65W	WSM45X	10	●	004	8241533	38,20
LNHX130608R-L55T	WAK15	10	●	004	6865027	30,10
LNHX130608R-L55T	WHH15X	10	●	004	7960069	33,10
LNHX130608R-L55T	WXM15	10	●	004	6865029	30,10
LNHX1306PDR-L55T	WAK15	10	●	004	6796204	31,60
LNHX1306PDR-L55T	WHH15X	10	●	004	7960070	34,80
LNHX1306PDR-L55T	WXM15	10	●	004	6796206	31,60
LNKU2010DPR-F57T	WKP35S	5	●	010	5918808	32,20
LNKU3010DPR-F57T	WKP35S	5	●	010	5918809	38,20
LNMU080304-F57T	WKP35G	10	●	004	7347287	30,60
LNMU080304-F57T	WKP35S	10	●	004	5887932	25,50
LNMU080304-F57T	WSM35G	10	●	004	8441390	26,80
LNMU080304-F57T	WSM35S	10	●	004	7058521	26,80
LNMU080304-F57T	WSP45G	10	●	004	8112874	26,80
LNMU080404-B57T	WKP35S	10	●	004	5887936	25,50
LNMU080404-F57T	WKP25S	10	●	004	6072570	25,50
LNMU080404-F57T	WKP35G	10	●	004	7347289	30,60
LNMU080404-F57T	WKP35S	10	●	004	5887937	25,50
LNMU080404-F57T	WSM35G	10	●	004	8441403	26,80
LNMU080404-F57T	WSM35S	10	●	004	7058522	26,80
LNMU080404-F57T	WSP45G	10	●	004	8112875	26,80

Bezeichnung / Designation	Sorte / Grade	VE / US		Disc. Gr.	Article No.	EURO Stück / piece
LNMU090404R-L55T	WKK25G	10	●	004	8284881	23,33
LNMU090404R-L55T	WKK25S	10	■	004	7270246*	23,33
LNMU090404R-L55T	WKP25S	10	●	004	7270244	22,22
LNMU090404R-L55T	WKP35G	10	●	004	7270245	26,70
LNMU090404R-L55T	WKP35S	10	●	004	7676777	22,22
LNMU090404R-L55T	WSM45X	10	●	004	8112759	28,20
LNMU090404R-L55T	WSP45G	10	●	004	7924238	23,35
LNMU100508-B57T	WKK25G	10	●	004	8441400	29,50
LNMU100508-B57T	WKK25S	10	●	004	6702091	29,50
LNMU100508-B57T	WKP35S	10	●	004	5887980	28,10
LNMU100508-F57T	WKP25S	10	●	004	6180748	28,10
LNMU100508-F57T	WKP35G	10	●	004	7347291	33,70
LNMU100508-F57T	WKP35S	10	●	004	5887981	28,10
LNMU100508-F57T	WSM35G	10	●	004	8441364	29,50
LNMU100508-F57T	WSM35S	10	●	004	7058523	29,50
LNMU100508-F57T	WSP45G	10	●	004	8112876	29,50
LNMU120608-B57T	WKP35G	10	●	004	7347292	35,20
LNMU120608-B57T	WKP35S	10	●	004	5887984	29,40
LNMU120608-F57T	WKP25S	10	●	004	6072572	29,40
LNMU120608-F57T	WKP35G	10	●	004	7347293	35,20
LNMU120608-F57T	WKP35S	10	●	004	5887985	29,40
LNMU120608-F57T	WSM35G	10	●	004	8441395	30,80
LNMU120608-F57T	WSM35S	10	●	004	7058524	30,80
LNMU120608-F57T	WSP45G	10	●	004	8112877	30,80
LNMU130608R-L55T	WKK25G	10	●	004	8284865	25,60
LNMU130608R-L55T	WKK25S	10	■	004	7030357*	25,60
LNMU130608R-L55T	WKP25S	10	●	004	7030355	24,35
LNMU130608R-L55T	WKP35G	10	●	004	7169070	29,20
LNMU130608R-L55T	WKP35S	10	●	004	7030356	24,35
LNMU130608R-L55T	WSM45X	10	●	004	8112760	30,90
LNMU130608R-L55T	WSP45G	10	●	004	7924243	25,60
LNMU150812-F57T	WAK15	10	●	010	5015805	27,10
LNMU150812-F57T	WKP25S	10	●	010	6070964	27,10
LNMU150812-F57T	WKP35G	10	●	010	7347295	32,50
LNMU150812-F57T	WKP35S	10	●	010	5918840	27,10
LNMU150812-F57T	WSP45G	10	●	010	8112878	28,50
LNMU150812T-F27T	WKP25S	10	●	010	6070966	27,10
LNMU150812T-F27T	WKP35G	10	●	010	7347297	32,50
LNMU150812T-F27T	WKP35S	10	●	010	5918841	27,10
LNMU160812-B57T	WKP35S	10	●	004	5887988	31,90
LNMU160812-F57T	WKP25S	10	●	004	6072573	31,90
LNMU160812-F57T	WKP35G	10	●	004	7347299	38,30
LNMU160812-F57T	WKP35S	10	●	004	5888000	31,90
LNMU160812-F57T	WSM35G	10	●	004	8441361	33,50
LNMU160812-F57T	WSM35S	10	●	004	7058525	33,50
LNMU160812-F57T	WSP45G	10	●	004	8112879	33,50
LNMU201012-F57T	WKP25S	5	●	010	6070967	29,30
LNMU201012-F57T	WKP35S	5	●	010	5918842	29,30
LNMU201012-F57T	WSP45G	5	●	010	8201921	30,80
LNMU201012-F57T	WSP45S	5	■	010	7057796*	30,80
LNMU201012T-F27T	WKP25S	5	●	010	6070968	29,30
LNMU201012T-F27T	WKP35S	5	●	010	5918843	29,30
LNMX070204-F57T	WKP35S	10	●	004	5887854	22,97
LNMX070204-F57T	WSM35G	10	●	004	8285006	24,12
LNMX070204-F57T	WSM35S	10	■	004	7058526*	24,12
LNMX201012R-F27T	WKP35G	5	●	010	7170506	35,10
LNMX201012R-F27T	WKP35S	5	●	010	6766134	29,30
LNMX201012R-F57T	WKP25S	5	●	010	6766137	29,30
LNMX201012R-F57T	WKP35G	5	●	010	7169044	35,10
LNMX201012R-F57T	WKP35S	5	●	010	6766138	29,30
LNMX201012R-F57T	WSP45G	5	●	010	7924244	30,80
LPGT070304R-F55	WKP35S	10	●	009	5918251	18,62
LPGT150412R-F55	WKP35S	10	●	009	5918254	26,70
LPGT15T308R-F55	WKP35S	10	●	009	5918256	19,53
LPGT15T308R-F55	WSP45G	10	●	009	8201922	20,52
LPGT15T308R-F55	WSP45S	10	■	009	7057769*	20,52
LPHW150612R-A51	WKP35S	10	●	009	5918279	27,20
LPMT070304R-D51	WKP25S	10	●	009	6071508	14,33
LPMT070304R-D51	WKP35S	10	●	009	5918283	14,33
LPMT150412R-D51	WKP25S	10	●	009	6071557	20,35

Bezeichnung / Designation	Sorte / Grade	VE / US		Disc. Gr.	Article No.	EURO Stück / piece
LPMT150412R-D51	WKP35S	10	●	009	5918284	20,35
LPMT150412R-D51	WSP45G	10	●	009	8201923	21,37
LPMT150412R-D51	WSP45S	10	■	009	7057771*	21,37
LPMT150612R-D51	WKP35S	10	●	009	5918286	22,49
LPMT150612R-D51	WSP45G	10	●	009	8112880	23,62
LPMT150612R-D57	WKP25S	10	●	009	6071560	22,49
LPMT150612R-D57	WKP35S	10	●	009	5918288	22,49
LPMT15T308R-D51	WKP25S	10	●	009	6071571	14,98
LPMT15T308R-D51	WKP35S	10	●	009	5918302	14,98
LPMT15T308R-D51	WSP45G	10	●	009	8201924	15,74
LPMT15T308R-D51	WSP45S	10	■	009	7057773*	15,74
LPMW150412TR-A27	WKP25S	10	●	009	6071575	18,62
LPMW150412TR-A27	WKP35S	10	●	009	5918308	18,62
M02,5X005 ISO 4026		1	●	095	6841141	1,79
M02X002 ISO 4026		1	●	095	6860616	1,79
M02X004 ISO 4026		1	●	095	6728374	1,79
M03X003 ISO 4026		1	●	095	5096227	1,79
M03X006 ISO 4026		1	●	095	7201604	1,79
M03X010 ISO4762 8.8		1	●	095	5163253	1,79
M04X004 ISO 4026		1	●	095	5032918	1,79
M04X006 ISO 4026		1	●	095	5093333	1,79
M04X006 ISO4027		1	●	095	5035334	1,79
M04X008 ISO4027		1	●	095	5021500	1,79
M04X010 DIN7984 8.8		1	●	095	5036926	1,79
M05X005 ISO4027		1	●	095	5163249	1,79
M05X006 ISO 4026		1	●	095	5097334	1,79
M05X010 ISO14579 8.8		1	●	095	6730812	1,79
M05X010 DIN914 45H		1	●	095	5035330	1,79
M05X016 ISO14581 8.8		1	●	095	6730815	1,79
M06X005 ISO 4026		1	●	095	5050336	1,79
M06X008 DIN915 45H		1	●	095	5163250	1,79
M06X010 DIN915		1	●	095	5035340	1,79
M06X012 ISO4027		1	●	095	5035333	1,79
M06X014 ISO4762 12.9		1	●	095	6788078	1,79
M06X016 ISO4027		1	●	095	5035328	1,79
M06X020 ISO4762 12.9		1	●	095	5099368	1,79
M06X022 ISO4762 12.9		1	○	095	6841166	1,79
M06X025 ISO4762 12.9		1	●	095	5054592	1,79
M08X006 ISO 4026		1	●	095	6846166	1,79
M08X010		1	●	095	5035341	5,39
M08X016 ISO4762 12.9		1	●	095	6788160	1,79
M08X020 ISO4762 12.9		1	●	095	5052149	1,79
M08X025 ISO4762 12.9		1	●	095	5052150	1,79
M08X035 ISO4762 12.9		1	●	095	5021464	1,79
M08X040 ISO4762 12.9		1	●	095	7663928	1,79
M08X050 ISO4762 12.9		1	●	095	5163256	1,79
M10X010 ISO 4026		1	●	095	5035326	1,79
M10X012		1	●	095	5035342	1,79
M10X020 ISO4762 12.9		1	○	095	6841167	1,79
M10X025 ISO4762 12.9		1	○	095	6841168	1,79
M10X030 ISO4762 10.9		1	●	095	5035319	1,79
M10X035 ISO4762 10.9		1	●	095	5021463	1,79
M10X035 ISO4762 12.9		1	●	095	7663987	1,79
M10X040 ISO4762 12.9		1	●	095	7663982	1,79
M10X045 ISO4762 12.9		1	●	095	7663929	1,79
M10X055 ISO4762 12.9		1	●	095	7663970	1,79
M12X016		1	●	095	5035343	1,79
M12X025 ISO4762 12.9		1	○	095	6841169	1,79
M12X040 ISO4762 12.9		1	●	095	7663976	1,79
M12X045 ISO4762 10.9		1	●	095	5035323	1,79
M12X045 ISO4762 12.9		1	●	095	7804127	1,79
M12X050 ISO4762 12.9		1	●	095	7663977	1,79
M12X055 ISO4762 12.9		1	●	095	7663971	3,55
M12X060 ISO4762 12.9		1	●	095	7804128	1,79
M12X065 ISO4762 12.9		1	●	095	7663978	3,55
M12X070 ISO4762 12.9		1	●	095	7663974	3,55
M14X016		1	●	095	5035344	3,55
M16X016		1	●	095	5035345	3,55
M16X050 ISO4762 8.8		1	●	095	5035321	3,55
M16X060 ISO4762 12.9		1	●	095	7663984	4,71

Bezeichnung / Designation	Sorte / Grade	VE / US		Disc. Gr.	Article No.	EURO Stück / piece
M16X065 ISO4762 12.9		1	●	095	7663972	4,71
M16X070 ISO4762 12.9		1	●	095	7663973	4,71
M16X090 ISO4762 12.9		1	●	095	7663975	4,71
M18X2X020		1	●	095	5035346	5,65
M20213-M1	VAP	1	●	THP	6150060	56,80
M20213-M1.2	VAP	1	●	THP	6150061	54,40
M20213-M1.4	VAP	1	●	THP	6150062	51,90
M20213-M1.6	VAP	1	●	THP	6149642	49,40
M20213-M1.7	VAP	1	●	THP	6254907	48,20
M20213-M1.8	VAP	1	●	THP	6149643	47,00
M20213-M2	VAP	1	●	THP	6149644	44,50
M20213-M2.2	VAP	1	●	THP	6149645	42,10
M20213-M2.3	VAP	1	●	THP	6149646	40,80
M20213-M2.5	VAP	1	●	THP	6149647	38,30
M20213-M2.6	VAP	1	●	THP	6149648	37,10
M20213-M3	VAP	1	●	THP	6149649	34,60
M20213-M3.5	VAP	1	●	THP	6149650	33,40
M20213-M4	VAP	1	●	THP	6149651	33,80
M20213-M4.5	VAP	1	●	THP	6149652	35,10
M20213-M5	VAP	1	●	THP	6149653	36,40
M20213-M6	VAP	1	●	THP	6149654	41,60
M20213-M7	VAP	1	●	THP	6149655	46,80
M20213-M8	VAP	1	●	THP	6149656	52,00
M20213-M10	VAP	1	●	THP	6149658	62,40
M2021305-M2	TIN	1	●	THP	6149668	49,40
M2021305-M2.5	TIN	1	●	THP	6149669	42,60
M2021305-M3	TIN	1	●	THP	6149670	38,50
M2021305-M3.5	TIN	1	●	THP	6149671	37,10
M2021305-M4	TIN	1	●	THP	6149672	37,60
M2021305-M5	TIN	1	●	THP	6149673	40,50
M2021305-M6	TIN	1	●	THP	6149674	46,30
M2021305-M8	TIN	1	●	THP	6149675	57,80
M2021305-M10	TIN	1	●	THP	6149676	69,40
M2021306-M2	TICN	1	●	THP	6149659	54,40
M2021306-M2.5	TICN	1	●	THP	6149660	46,80
M2021306-M3	TICN	1	●	THP	6149661	42,30
M2021306-M3.5	TICN	1	●	THP	6149662	40,80
M2021306-M4	TICN	1	●	THP	6149663	41,40
M2021306-M5	TICN	1	●	THP	6149664	44,50
M2021306-M6	TICN	1	●	THP	6149665	50,90
M2021306-M8	TICN	1	●	THP	6149666	63,60
M2021306-M10	TICN	1	●	THP	6149667	76,30
M20233-M3	VAP	1	●	THP	6149677	34,60
M20233-M4	VAP	1	●	THP	6149678	33,80
M20233-M5	VAP	1	●	THP	6149679	36,40
M20233-M6	VAP	1	●	THP	6149680	41,60
M20233-M7	VAP	1	●	THP	6149681	46,80
M20233-M8	VAP	1	●	THP	6149682	52,00
M20233-M10	VAP	1	●	THP	6149683	62,40
M2023306-M3	TICN	1	●	THP	6149684	42,30
M2023306-M4	TICN	1	●	THP	6149685	41,40
M2023306-M5	TICN	1	●	THP	6149686	44,50
M2023306-M6	TICN	1	●	THP	6149687	50,90
M2023306-M7	TICN	1	●	THP	6149688	57,20
M2023306-M8	TICN	1	●	THP	6149689	63,60
M2023306-M10	TICN	1	●	THP	6149690	76,30
M2025-080-B27-12-03		1	●	048	6625053	1.258,00
M2025-100-B32-15-03		1	●	048	6625054	1.570,00
M2025-125-B40-18-03		1	●	048	6625055	1.861,00
M2025-160-B40-21-03		1	●	048	6625056	2.455,00
M2026-200-B60-27-03		1	●	048	6625062	3.319,00
M2026-250-B60-33-03		1	●	048	6625063	4.350,00
M20263-M5	VAP	1	●	THP	6149691	36,40
M20263-M6	VAP	1	●	THP	6149692	41,60
M20263-M8	VAP	1	●	THP	6149693	52,00
M20263-M10	VAP	1	●	THP	6149694	62,40
M20263-M12	VAP	1	●	THP	6149695	76,50
M20263-M14	VAP	1	●	THP	6149696	87,40
M20263-M16	VAP	1	●	THP	6149697	98,40
M20263-M18	VAP	1	●	THP	6149698	115,00

Bezeichnung / Designation	Sorte / Grade	VE / US		Disc. Gr.	Article No.	EURO Stück / piece
M20263-M20	VAP	1	●	THP	6149699	131,00
M20263-M22	VAP	1	●	THP	6149700	153,00
M20263-M24	VAP	1	●	THP	6149701	175,00
M20263-M27	VAP	1	●	THP	6149702	240,00
M20263-M30	VAP	1	●	THP	6149703	284,00
M20263-M33	VAP	1	●	THP	6149704	343,00
M20263-M36	VAP	1	●	THP	6149705	412,00
M2026305-M12	TIN	1	●	THP	6149715	85,00
M2026305-M14	TIN	1	●	THP	6149716	97,10
M2026305-M16	TIN	1	●	THP	6149717	109,00
M2026305-M20	TIN	1	●	THP	6149718	146,00
M2026306-M5	TICN	1	●	THP	6149706	44,50
M2026306-M6	TICN	1	●	THP	6149707	50,90
M2026306-M8	TICN	1	●	THP	6149708	63,60
M2026306-M10	TICN	1	●	THP	6149709	76,30
M2026306-M12	TICN	1	●	THP	6149710	93,50
M2026306-M14	TICN	1	●	THP	6149711	107,00
M2026306-M16	TICN	1	●	THP	6149712	120,00
M2026306-M20	TICN	1	●	THP	6149713	160,00
M2026306-M24	TICN	1	●	THP	6149714	214,00
M203009-EGM2.5	VAP	1	●	THP	6149719	34,60
M203009-EGM3	VAP	1	●	THP	6149720	32,10
M203009-EGM4	VAP	1	●	THP	6149721	36,40
M203009-EGM5	VAP	1	●	THP	6149722	41,60
M203009-EGM6	VAP	1	●	THP	6149723	52,00
M203009-EGM8	VAP	1	●	THP	6149724	62,40
M205049-EGM2.5	VAP	1	●	THP	6149725	40,10
M205049-EGM3	VAP	1	●	THP	6149726	37,20
M205049-EGM4	VAP	1	●	THP	6149727	40,10
M205049-EGM5	VAP	1	●	THP	6149728	45,80
M205049-EGM6	VAP	1	●	THP	6149729	57,20
M205049-EGM8	VAP	1	●	THP	6149730	68,70
M20513-M1.6	VAP	1	●	THP	6149731	57,20
M20513-M1.7	VAP	1	●	THP	6254908	55,80
M20513-M1.8	VAP	1	●	THP	6149732	54,40
M20513-M2	VAP	1	●	THP	6149733	51,50
M20513-M2.5	VAP	1	●	THP	6149734	44,40
M20513-M3	VAP	1	●	THP	6149735	40,10
M20513-M3.5	VAP	1	●	THP	6149736	38,60
M20513-M4	VAP	1	●	THP	6149737	37,20
M20513-M4.5	VAP	1	●	THP	6149738	38,60
M20513-M5	VAP	1	●	THP	6149739	40,10
M20513-M6	VAP	1	●	THP	6149740	45,80
M20513-M7	VAP	1	●	THP	6149741	51,50
M20513-M8	VAP	1	●	THP	6149742	57,20
M20513-M10	VAP	1	●	THP	6149743	68,70
M2051305-M2	TIN	1	●	THP	6149755	57,20
M2051305-M2.5	TIN	1	●	THP	6149756	49,30
M2051305-M3	TIN	1	●	THP	6149757	44,50
M2051305-M4	TIN	1	●	THP	6149758	41,40
M2051305-M5	TIN	1	●	THP	6149759	44,50
M2051305-M6	TIN	1	●	THP	6149760	50,90
M2051305-M8	TIN	1	●	THP	6149761	63,60
M2051305-M10	TIN	1	●	THP	6149762	76,30
M2051306-M2	TICN	1	●	THP	6149744	63,00
M2051306-M2.5	TICN	1	●	THP	6149745	54,20
M2051306-M3	TICN	1	●	THP	6149746	49,00
M2051306-M4	TICN	1	●	THP	6149747	45,50
M2051306-M5	TICN	1	●	THP	6149748	49,00
M2051306-M6	TICN	1	●	THP	6149749	56,00
M2051306-M8	TICN	1	●	THP	6149750	70,00
M2051306-M10	TICN	1	●	THP	6149751	84,00
M2051332-M4	THL	1	●	THP	6149752	63,70
M2051332-M5	THL	1	●	THP	6149753	68,60
M2051332-M6	THL	1	●	THP	6149754	78,40
M20533-M3	VAP	1	●	THP	6149763	40,10
M20533-M4	VAP	1	●	THP	6149764	37,20
M20533-M5	VAP	1	●	THP	6149765	40,10
M20533-M6	VAP	1	●	THP	6149766	45,80
M20533-M8	VAP	1	●	THP	6149767	57,20

Bezeichnung / Designation	Sorte / Grade	VE / US		Disc. Gr.	Article No.	EURO Stück / piece
M20533-M10	VAP	1	●	THP	6149768	68,70
M2053306-M3	TICN	1	●	THP	6149769	49,00
M2053306-M4	TICN	1	●	THP	6149780	45,50
M2053306-M5	TICN	1	●	THP	6149781	49,00
M2053306-M6	TICN	1	●	THP	6149782	56,00
M2053306-M8	TICN	1	●	THP	6149783	70,00
M2053306-M10	TICN	1	●	THP	6149784	84,00
M205549-EGM10	VAP	1	●	THP	6149785	84,20
M205549-EGM12	VAP	1	●	THP	6149786	96,20
M205549-EGM14	VAP	1	●	THP	6149787	108,00
M205549-EGM16	VAP	1	●	THP	6149788	126,00
M20563-M6	VAP	1	●	THP	6149789	45,80
M20563-M8	VAP	1	●	THP	6149790	57,20
M20563-M10	VAP	1	●	THP	6149791	68,70
M20563-M12	VAP	1	●	THP	6149792	84,20
M20563-M14	VAP	1	●	THP	6149793	96,20
M20563-M16	VAP	1	●	THP	6149794	108,00
M20563-M18	VAP	1	●	THP	6149795	126,00
M20563-M20	VAP	1	●	THP	6149796	144,00
M20563-M22	VAP	1	●	THP	6149797	168,00
M20563-M24	VAP	1	●	THP	6149798	192,00
M20563-M27	VAP	1	●	THP	6149799	277,00
M20563-M30	VAP	1	●	THP	6149800	327,00
M20563-M33	VAP	1	●	THP	6149801	378,00
M20563-M36	VAP	1	●	THP	6149802	453,00
M20563-M42	VAP	1	●	THP	6149803	630,00
M2056305-M12	TIN	1	●	THP	6149817	93,50
M2056305-M16	TIN	1	●	THP	6149818	120,00
M2056305-M20	TIN	1	●	THP	6149819	160,00
M2056306-M6	TICN	1	●	THP	6149804	56,00
M2056306-M8	TICN	1	●	THP	6149805	70,00
M2056306-M10	TICN	1	●	THP	6149806	84,00
M2056306-M12	TICN	1	●	THP	6149807	103,00
M2056306-M16	TICN	1	●	THP	6149808	132,00
M2056306-M20	TICN	1	●	THP	6149809	176,00
M2056306-M24	TICN	1	●	THP	6149810	235,00
M2056306-M30	TICN	1	●	THP	6149811	400,00
M2056332-M8	THL	1	●	THP	6149812	98,00
M2056332-M10	THL	1	●	THP	6149813	118,00
M2056332-M12	THL	1	●	THP	6149814	144,00
M2056332-M16	THL	1	●	THP	6149815	185,00
M2056332-M20	THL	1	●	THP	6149816	247,00
M20X060 ISO4762 8.8		1	●	095	5035320	5,65
M20X070 ISO4762 12.9		1	●	095	7663985	5,65
M20X080 ISO4762 12.9		1	●	095	7663980	5,65
M20X090 ISO4762 12.9		1	●	095	7663981	5,65
M20X2X020		1	●	095	5035347	5,93
M2121305-M5X0.5	TIN	1	●	THP	6149820	49,00
M2121305-M6X0.5	TIN	1	●	THP	6149821	56,00
M2121305-M6X0.75	TIN	1	●	THP	6149822	56,00
M21263-M8X0.5	VAP	1	●	THP	6149823	57,20
M21263-M8X0.75	VAP	1	●	THP	6149824	57,20
M21263-M8X1	VAP	1	●	THP	6149826	57,20
M21263-M10X0.75	VAP	1	●	THP	6149825	68,70
M21263-M10X1	VAP	1	●	THP	6149827	68,70
M21263-M10X1.25	VAP	1	●	THP	6149828	68,70
M21263-M12X1	VAP	1	●	THP	6149829	84,20
M21263-M12X1.25	VAP	1	●	THP	6149831	84,20
M21263-M12X1.5	VAP	1	●	THP	6149832	84,20
M21263-M14X1	VAP	1	●	THP	6149830	96,20
M21263-M14X1.5	VAP	1	●	THP	6149833	96,20
M21263-M16X1	VAP	1	●	THP	6150063	108,00
M21263-M16X1.5	VAP	1	●	THP	6149834	108,00
M21263-M18X1.5	VAP	1	●	THP	6149835	126,00
M21263-M20X1.5	VAP	1	●	THP	6149836	144,00
M21263-M22X1.5	VAP	1	●	THP	6149837	168,00
M21263-M24X1.5	VAP	1	●	THP	6149838	192,00
M2126305-M8X0.5	TIN	1	●	THP	6149839	63,60
M2126305-M8X0.75	TIN	1	●	THP	6149840	63,60
M2126305-M8X1	TIN	1	●	THP	6149841	63,60

Bezeichnung / Designation	Sorte / Grade	VE / US		Disc. Gr.	Article No.	EURO Stück / piece
M2126305-M10X1	TIN	1	●	THP	6149842	76,30
M2126305-M10X1.25	TIN	1	●	THP	6149843	76,30
M2126305-M12X1.5	TIN	1	●	THP	6149844	93,50
M2126305-M14X1.5	TIN	1	●	THP	6149845	107,00
M2126305-M16X1.5	TIN	1	●	THP	6149846	120,00
M2126305-M18X1.5	TIN	1	●	THP	6149847	140,00
M2126305-M20X1.5	TIN	1	●	THP	6149848	160,00
M2128305-M12X1.5	TIN	1	●	THP	6149850	93,50
M2128305-M14X1.5	TIN	1	●	THP	6149851	107,00
M2128305-M16X1.5	TIN	1	●	THP	6149852	120,00
M2128305-M20X1.5	TIN	1	●	THP	6149853	160,00
M2128305-M24X1.5	TIN	1	●	THP	6149854	214,00
M2131-025-A20-02-15-S		1	●	048	6836943	476,00
M2131-025-A25-02-15-L		1	●	048	6836946	524,00
M2131-025-H63-02-15		1	●	048	6836955	866,00
M2131-025-T22-02-15		1	●	048	6836887	455,00
M2131-032-A20-02-15-S		1	●	048	6836944	503,00
M2131-032-A20-03-15-S		1	●	048	6836945	529,00
M2131-032-A25-02-15-L		1	●	048	6836947	553,00
M2131-032-A25-02-20-L		1	●	048	6836949	553,00
M2131-032-A25-03-15-L		1	●	048	6836948	582,00
M2131-032-A32-02-15-L		1	●	048	6836950	553,00
M2131-032-A32-02-20-L		1	●	048	6836951	553,00
M2131-032-A32-03-15-L		1	●	048	6836952	582,00
M2131-032-H63-02-15		1	●	048	6836956	914,00
M2131-032-T28-02-15		1	●	048	6836888	480,00
M2131-032-T28-02-20		1	●	048	6836889	480,00
M2131-032-T28-03-15		1	●	048	6836940	505,00
M2131-040-B16-03-15		1	●	048	6836964	506,00
M2131-040-H63-02-20		1	■	048	6836957*	962,00
M2131-040-T36-02-20		1	●	048	6836941	505,00
M2131-040-T36-03-15		1	●	048	6836942	532,00
M2131-050-B22-03-20		1	●	048	6836965	608,00
M2131-050-B22-04-15		1	●	048	6836966	638,00
M2131-050-H63-03-20		1	●	048	6836959	1.216,00
M2131-050-H63-04-15		1	●	048	6836958	1.276,00
M2131-050-H80-03-20-D		1	●	048	6836963	1.337,00
M2131-063-B22-04-20		1	●	048	6836967	745,00
M2131-063-B22-05-15		1	●	048	6836968	780,00
M2131-080-B27-05-15		1	●	048	6836969	891,00
M2131.026-A26-02-15-L		1	●	048	6836974	524,00
M2131.026-T22-02-15		1	●	048	6836970	455,00
M2131.031-A26-02-15-L		1	●	048	6836975	553,00
M2131.031-A26-03-15-L		1	●	048	6836976	582,00
M2131.031-T28-02-15		1	●	048	6836971	480,00
M2131.031-T28-03-15		1	●	048	6836972	505,00
M2131.038-A31-03-15-L		1	●	048	6836977	613,00
M2131.038-T36-03-15		1	●	048	6836973	532,00
M2131.051-B19-03-20		1	●	048	6836978	608,00
M2131.051-B19-04-15		1	●	048	6836979	638,00
M2131.064-B26-04-20		1	●	048	6836980	745,00
M2131.064-B26-05-15		1	●	048	6836981	780,00
M2131.076-B26-05-15		1	●	048	6836983	891,00
M2131.076-B26-05-20		1	●	048	6836982	891,00
M2136-050-B22-06-06		1	●	049	7038942	729,00
M2136-063-B22-08-06		1	●	049	7038943	922,00
M2136-080-B27-12-06		1	●	049	7038944	1.216,00
M2136-100-B32-16-06		1	●	049	7038945	1.550,00
M2136-125-B40-20-06		1	●	049	7038946	1.925,00
M2136-160-B40-24-06		1	●	049	7038947	2.553,00
M21513-M4X0.5	VAP	1	●	THP	6149855	40,90
M21513-M5X0.5	VAP	1	●	THP	6149856	44,10
M21513-M6X0.5	VAP	1	●	THP	6149857	50,40
M21513-M6X0.75	VAP	1	●	THP	6149858	50,40
M2151305-M4X0.5	TIN	1	●	THP	6149859	45,50
M2151305-M5X0.5	TIN	1	●	THP	6149860	49,00
M2151305-M6X0.5	TIN	1	●	THP	6149861	56,00
M21563-M8X0.5	VAP	1	●	THP	6149862	63,00
M21563-M8X0.75	VAP	1	●	THP	6149863	63,00
M21563-M8X1	VAP	1	●	THP	6149864	63,00

Bezeichnung / Designation	Sorte / Grade	VE / US		Disc. Gr.	Article No.	EURO Stück / piece
M21563-M10X0.75	VAP	1	●	THP	6149865	75,60
M21563-M10X1	VAP	1	●	THP	6149866	75,60
M21563-M10X1.25	VAP	1	●	THP	6149867	75,60
M21563-M12X1	VAP	1	●	THP	6149868	92,60
M21563-M12X1.25	VAP	1	●	THP	6149870	92,60
M21563-M12X1.5	VAP	1	●	THP	6149871	92,60
M21563-M14X1	VAP	1	●	THP	6149869	106,00
M21563-M14X1.5	VAP	1	●	THP	6149872	106,00
M21563-M16X1.5	VAP	1	●	THP	6149873	119,00
M21563-M18X1.5	VAP	1	●	THP	6149874	139,00
M21563-M20X1.5	VAP	1	●	THP	6149875	159,00
M21563-M20X2	VAP	1	●	THP	6149878	159,00
M21563-M22X1.5	VAP	1	●	THP	6149876	194,00
M21563-M24X1.5	VAP	1	●	THP	6149877	222,00
M21563-M24X2	VAP	1	●	THP	6149879	222,00
M21563-M27X1.5	VAP	1	●	THP	6150064	305,00
M21563-M27X2	VAP	1	●	THP	6149880	305,00
M21563-M30X2	VAP	1	●	THP	6150065	360,00
M2156305-M8X0.5	TIN	1	●	THP	6149881	70,00
M2156305-M8X0.75	TIN	1	●	THP	6149882	70,00
M2156305-M8X1	TIN	1	●	THP	6149883	70,00
M2156305-M10X0.75	TIN	1	●	THP	6149884	84,00
M2156305-M10X1	TIN	1	●	THP	6149885	84,00
M2156305-M10X1.25	TIN	1	●	THP	6149886	84,00
M2156305-M12X1	TIN	1	●	THP	6149887	103,00
M2156305-M12X1.25	TIN	1	●	THP	6149888	103,00
M2156305-M12X1.5	TIN	1	●	THP	6149889	103,00
M2156305-M14X1.5	TIN	1	●	THP	6149890	118,00
M2156305-M16X1.5	TIN	1	●	THP	6149891	132,00
M2156305-M18X1.5	TIN	1	●	THP	6149892	154,00
M2156305-M20X1.5	TIN	1	●	THP	6149893	176,00
M2158305-M8X1	TIN	1	●	THP	6149894	70,00
M2158305-M10X1	TIN	1	●	THP	6149895	84,00
M2158305-M12X1	TIN	1	●	THP	6149896	103,00
M2158305-M12X1.5	TIN	1	●	THP	6149897	103,00
M2158305-M14X1	TIN	1	●	THP	6149898	118,00
M2158305-M14X1.5	TIN	1	●	THP	6149899	118,00
M2158305-M16X1	TIN	1	●	THP	6149900	132,00
M2158305-M16X1.5	TIN	1	●	THP	6149901	132,00
M22213-UNC2	VAP	1	●	THP	6149903	42,10
M22213-UNC3	VAP	1	●	THP	6149904	38,30
M22213-UNC4	VAP	1	●	THP	6149905	35,90
M22213-UNC5	VAP	1	●	THP	6149906	34,60
M22213-UNC6	VAP	1	●	THP	6149907	33,40
M22213-UNC8	VAP	1	●	THP	6149908	33,80
M22213-UNC10	VAP	1	●	THP	6149909	36,40
M22213-UNC12	VAP	1	●	THP	6149910	36,40
M22213-UNC1/4	VAP	1	●	THP	6149902	41,60
M2221305-UNC2	TIN	1	●	THP	6149912	46,70
M2221305-UNC3	TIN	1	●	THP	6149913	42,60
M2221305-UNC4	TIN	1	●	THP	6149914	39,80
M2221305-UNC5	TIN	1	●	THP	6149915	38,50
M2221305-UNC6	TIN	1	●	THP	6149916	37,10
M2221305-UNC8	TIN	1	●	THP	6149917	37,60
M2221305-UNC10	TIN	1	●	THP	6149918	40,50
M2221305-UNC1/4	TIN	1	●	THP	6149911	46,30
M22263-UNC5/16	VAP	1	●	THP	6149924	52,00
M22263-UNC3/8	VAP	1	●	THP	6149923	62,40
M22263-UNC7/16	VAP	1	●	THP	6149926	67,70
M22263-UNC1/2	VAP	1	●	THP	6149921	76,50
M22263-UNC9/16	VAP	1	●	THP	6149928	87,40
M22263-UNC5/8	VAP	1	●	THP	6149925	98,40
M22263-UNC3/4	VAP	1	●	THP	6149922	123,00
M22263-UNC7/8	VAP	1	●	THP	6149927	153,00
M22263-UNC1	VAP	1	●	THP	6149920	197,00
M2226305-UNC3/8	TIN	1	●	THP	6149930	69,40
M2226305-UNC1/2	TIN	1	●	THP	6149929	85,00
M225049-EGUNC4	VAP	1	●	THP	6523759	38,60
M225049-EGUNC6	VAP	1	●	THP	6523810	37,20
M225049-EGUNC8	VAP	1	●	THP	6523811	40,10

Bezeichnung / Designation	Sorte / Grade	VE / US		Disc. Gr.	Article No.	EURO Stück / piece
M225049-EGUNC10	VAP	1	●	THP	6523812	45,80
M225049-EGUNC1/4	VAP	1	●	THP	6523813	57,20
M22513-UNC2	VAP	1	●	THP	6149932	48,60
M22513-UNC3	VAP	1	●	THP	6149933	44,40
M22513-UNC4	VAP	1	●	THP	6149934	41,50
M22513-UNC5	VAP	1	●	THP	6149935	40,10
M22513-UNC6	VAP	1	●	THP	6149936	38,60
M22513-UNC8	VAP	1	●	THP	6149937	37,20
M22513-UNC10	VAP	1	●	THP	6149938	40,10
M22513-UNC12	VAP	1	●	THP	6149939	40,10
M22513-UNC1/4	VAP	1	●	THP	6149931	45,80
M2251305-UNC2	TIN	1	●	THP	6149941	54,10
M2251305-UNC3	TIN	1	●	THP	6149942	49,30
M2251305-UNC4	TIN	1	●	THP	6149943	46,10
M2251305-UNC5	TIN	1	●	THP	6149944	44,50
M2251305-UNC6	TIN	1	●	THP	6149945	42,90
M2251305-UNC8	TIN	1	●	THP	6149946	41,40
M2251305-UNC10	TIN	1	●	THP	6149947	44,50
M2251305-UNC12	TIN	1	●	THP	6149948	44,50
M2251305-UNC1/4	TIN	1	●	THP	6149940	50,90
M225532-UN1.1/8	VAP	1	○	THP	6382916	312,00
M225532-UN1.1/4	VAP	1	○	THP	6382917	364,00
M225532-UN1.3/8	VAP	1	■	THP	6382918*	462,00
M225549-EGUNC5/16	VAP	1	●	THP	6523814	68,70
M225549-EGUNC3/8	VAP	1	●	THP	6523815	80,10
M225549-EGUNC1/2	VAP	1	●	THP	6523816	102,00
M22563-UNC5/16	VAP	1	●	THP	6149953	57,20
M22563-UNC3/8	VAP	1	●	THP	6149952	68,70
M22563-UNC7/16	VAP	1	●	THP	6149955	74,40
M22563-UNC1/2	VAP	1	●	THP	6149950	84,20
M22563-UNC9/16	VAP	1	●	THP	6149957	96,20
M22563-UNC5/8	VAP	1	●	THP	6149954	108,00
M22563-UNC3/4	VAP	1	●	THP	6149951	135,00
M22563-UNC7/8	VAP	1	●	THP	6149956	168,00
M22563-UNC1	VAP	1	●	THP	6149949	216,00
M22563-UNC1.1/8	VAP	1	●	THP	6149960	302,00
M22563-UNC1.1/4	VAP	1	●	THP	6149959	353,00
M22563-UNC1.1/2	VAP	1	●	THP	6149958	504,00
M2256305-UNC5/16	TIN	1	●	THP	6149974	63,60
M2256305-UNC3/8	TIN	1	●	THP	6149973	76,30
M2256305-UNC7/16	TIN	1	●	THP	6149976	82,70
M2256305-UNC1/2	TIN	1	●	THP	6149971	93,50
M2256305-UNC9/16	TIN	1	●	THP	6149978	107,00
M2256305-UNC5/8	TIN	1	●	THP	6149975	120,00
M2256305-UNC3/4	TIN	1	●	THP	6149972	150,00
M2256305-UNC7/8	TIN	1	●	THP	6149977	187,00
M2256305-UNC1	TIN	1	●	THP	6149970	240,00
M225632-UN1.1/8	VAP	1	●	THP	6149962	312,00
M225632-UN1.1/4	VAP	1	●	THP	6149963	364,00
M225632-UN1.3/8	VAP	1	●	THP	6149964	462,00
M225632-UN1.1/2	VAP	1	●	THP	6149965	544,00
M225632-UN1.5/8	VAP	1	●	THP	6149966	680,00
M225632-UN1.3/4	VAP	1	●	THP	6149967	839,00
M225632-UN1.7/8	VAP	1	●	THP	6149968	967,00
M225632-UN2	VAP	1	●	THP	6149969	1.052,00
M23213-UNF5	VAP	1	●	THP	6149980	38,10
M23213-UNF6	VAP	1	●	THP	6149981	36,70
M23213-UNF8	VAP	1	●	THP	6149982	35,40
M23213-UNF10	VAP	1	●	THP	6149983	40,10
M23213-UNF12	VAP	1	●	THP	6149984	40,10
M23213-UNF1/4	VAP	1	●	THP	6149979	45,80
M2321305-UNF10	TIN	1	●	THP	6149985	44,50
M2321305-UNF1/4	TIN	1	●	THP	6149986	50,90
M23263-UNF5/16	VAP	1	●	THP	6149991	57,20
M23263-UNF3/8	VAP	1	●	THP	6149990	68,70
M23263-UNF7/16	VAP	1	●	THP	6149993	74,40
M23263-UNF1/2	VAP	1	●	THP	6149988	84,20
M23263-UNF9/16	VAP	1	●	THP	6149995	96,20
M23263-UNF5/8	VAP	1	●	THP	6149992	108,00
M23263-UNF3/4	VAP	1	●	THP	6149989	135,00

Bezeichnung / Designation	Sorte / Grade	VE / US		Disc. Gr.	Article No.	EURO Stück / piece
M23263-UNF7/8	VAP	1	●	THP	6149994	168,00
M23263-UNF1	VAP	1	●	THP	6149987	216,00
M2326305-UNF5/16	TIN	1	●	THP	6149998	63,60
M2326305-UNF3/8	TIN	1	●	THP	6149997	76,30
M2326305-UNF7/16	TIN	1	●	THP	6149999	82,70
M2326305-UNF1/2	TIN	1	●	THP	6149996	93,50
M233009-EGUNF8	VAP	1	●	THP	6150001	40,10
M233009-EGUNF10	VAP	1	●	THP	6150002	45,80
M233009-EGUNF1/4	VAP	1	●	THP	6150000	57,20
M2331-032-H80F-02-15-MA		1	●	048	7454310	1.006,00
M2331-040-B16-03-15		1	●	048	7454297	506,00
M2331-040-H80F-02-20-MA		1	●	048	7454311	1.059,00
M2331-040-H80F-03-15-MA		1	●	048	7454312	1.114,00
M2331-050-B22-03-20		1	●	048	7454298	608,00
M2331-050-B22-04-15		1	●	048	7454299	638,00
M2331-050-H80F-03-20-MA		1	●	048	7454313	1.337,00
M2331-050-H80F-04-15-MA		1	●	048	7454314	1.404,00
M2331.038-H80F-03-15-MA		1	●	048	7454320	1.114,00
M2331.051-H80F-03-20-MA		1	●	048	7454321	1.337,00
M2331.051-H80F-04-15-MA		1	●	048	7454322	1.404,00
M235049-EGUNF10	VAP	1	●	THP	6150004	45,80
M235049-EGUNF1/4	VAP	1	●	THP	6150003	57,20
M23513-UNF6	VAP	1	●	THP	6150006	42,50
M23513-UNF8	VAP	1	●	THP	6150007	40,90
M23513-UNF10	VAP	1	●	THP	6150008	44,10
M23513-UNF12	VAP	1	●	THP	6150009	44,10
M23513-UNF1/4	VAP	1	●	THP	6150005	50,40
M2351305-UNF8	TIN	1	●	THP	6150012	45,50
M2351305-UNF10	TIN	1	●	THP	6150013	49,00
M2351305-UNF12	TIN	1	●	THP	6150014	49,00
M2351305-UNF1/4	TIN	1	●	THP	6150010	56,00
M23563-UNF5/16	VAP	1	●	THP	6150019	63,00
M23563-UNF3/8	VAP	1	●	THP	6150018	75,60
M23563-UNF7/16	VAP	1	●	THP	6150021	81,90
M23563-UNF1/2	VAP	1	●	THP	6150016	92,60
M23563-UNF9/16	VAP	1	●	THP	6150023	106,00
M23563-UNF5/8	VAP	1	●	THP	6150020	119,00
M23563-UNF3/4	VAP	1	●	THP	6150017	149,00
M23563-UNF7/8	VAP	1	●	THP	6150022	185,00
M23563-UNF1	VAP	1	●	THP	6150015	249,00
M2356305-UNF5/16	TIN	1	●	THP	6150028	70,00
M2356305-UNF3/8	TIN	1	●	THP	6150027	84,00
M2356305-UNF7/16	TIN	1	●	THP	6150030	91,00
M2356305-UNF1/2	TIN	1	●	THP	6150025	103,00
M2356305-UNF9/16	TIN	1	●	THP	6150032	118,00
M2356305-UNF5/8	TIN	1	●	THP	6150029	132,00
M2356305-UNF3/4	TIN	1	●	THP	6150026	165,00
M2356305-UNF7/8	TIN	1	●	THP	6150031	206,00
M2356305-UNF1	TIN	1	●	THP	6150024	277,00
M24263-G1/8	VAP	1	●	THP	6150036	59,30
M24263-G1/4	VAP	1	●	THP	6150035	77,90
M24263-G3/8	VAP	1	●	THP	6150038	93,40
M24263-G1/2	VAP	1	●	THP	6150034	125,00
M24263-G3/4	VAP	1	●	THP	6150037	208,00
M24263-G1	VAP	1	●	THP	6150033	326,00
M2426305-G1/8	TIN	1	●	THP	6150043	65,90
M2426305-G1/4	TIN	1	●	THP	6150042	86,50
M2426305-G3/8	TIN	1	●	THP	6150045	104,00
M2426305-G1/2	TIN	1	●	THP	6150041	138,00
M2426305-G3/4	TIN	1	●	THP	6150044	231,00
M2426305-G1	TIN	1	●	THP	6150040	363,00
M24563-G1/8	VAP	1	●	THP	6150049	65,30
M24563-G1/4	VAP	1	●	THP	6150048	85,70
M24563-G3/8	VAP	1	●	THP	6150051	103,00
M24563-G1/2	VAP	1	●	THP	6150047	137,00
M24563-G5/8	VAP	1	●	THP	6150052	160,00
M24563-G3/4	VAP	1	●	THP	6150050	239,00
M24563-G7/8	VAP	1	●	THP	6150053	311,00
M24563-G1	VAP	1	●	THP	6150046	359,00
M2456305-G1/8	TIN	1	●	THP	6150057	72,50

Bezeichnung / Designation	Sorte / Grade	VE / US		Disc. Gr.	Article No.	EURO Stück / piece
M2456305-G1/4	TIN	1	●	THP	6150056	95,20
M2456305-G3/8	TIN	1	●	THP	6150059	114,00
M2456305-G1/2	TIN	1	●	THP	6150055	152,00
M2456305-G3/4	TIN	1	●	THP	6150058	266,00
M2456305-G1	TIN	1	●	THP	6150054	399,00
M2471-025-A25-03-05-L		1	●	048	7804286	445,00
M2471-025-T22-03-05		1	●	048	7804288	387,00
M2471-032-A32-04-05		1	●	048	7804287	449,00
M2471-032-T28-03-06		1	●	048	7037592	408,00
M2471-040-B16-05-05		1	●	048	7804350	450,00
M2471-040-T36-04-06		1	●	048	7037593	451,00
M2471-050-B22-05-06		1	●	048	7037594	540,00
M2471-050-B22-06-05		1	●	048	7804351	565,00
M2471-052-B22-05-06		1	●	048	7037595	540,00
M2471-063-B22-07-06		1	●	048	7037596	687,00
M2471.051-B19-05-06		1	●	048	7037597	540,00
M2471.064-B26-07-06		1	●	048	7037598	687,00
M2472-032-T28-03-06		1	●	048	7937887	501,00
M2472-040-T36-04-06		1	●	048	7937888	585,00
M2472-050-B22-06-06		1	●	048	7937889	778,00
M2473-040-T36-04-06		1	●	048	7937910	585,00
M2473-050-B22-05-06		1	●	048	7937911	734,00
M2473-063-B27-06-06		1	●	048	7937912	862,00
M24X080 ISO4762 12.9		1	●	095	7663986	6,75
M3016-125-B40-06-16		1	●	049	6657753	1.244,00
M3016-160-B40-07-16		1	●	049	6657754	1.558,00
M3016-200-B60-09-16		1	●	049	6657755	1.931,00
M3016-250-B60-11-16		1	●	049	6657756	2.293,00
M3016-315-B60-13-16		1	●	049	6657757	2.677,00
M3024-040-B16-03-04		1	●	049	6768409	437,00
M3024-050-B22-04-04		1	●	049	6768410	550,00
M3024-050-B22-05-04		1	●	049	6768411	576,00
M3024-063-B22-05-04		1	●	049	6768412	673,00
M3024-063-B22-05-06		1	●	049	6941639	673,00
M3024-063-B22-06-04		1	●	049	6768413	703,00
M3024-080-B27-06-04		1	●	049	6768414	804,00
M3024-080-B27-06-06		1	●	049	6943590	804,00
M3024-080-B27-07-04		1	●	049	6768415	839,00
M3024-100-B32-07-04		1	●	049	6768416	943,00
M3024-100-B32-07-06		1	●	049	6943591	943,00
M3024-100-B32-08-04		1	●	049	6768417	983,00
M3024-125-B40-08-04		1	●	049	6768418	1.092,00
M3024-125-B40-08-06		1	●	049	6943592	1.092,00
M3024-125-B40-10-04		1	●	049	6768419	1.135,00
M3024-160-B40-09-04		1	●	049	6768420	1.336,00
M3024-160-B40-09-06		1	●	049	6943593	1.336,00
M3024-160-B40-12-04		1	●	049	6768421	1.415,00
M3024.051-B19-04-04		1	●	049	6768426	550,00
M3024.064-B26-05-06		1	●	049	6943625	673,00
M3024.064-B26-06-04		1	●	049	6768427	703,00
M3024.076-B26-06-06		1	●	049	6943626	804,00
M3024.076-B26-07-04		1	●	049	6768428	839,00
M3024.102-B31-07-06		1	●	049	6943627	943,00
M3024.102-B31-08-04		1	●	049	6768429	983,00
M3024.127-B38-08-06		1	●	049	6943628	1.092,00
M3024.127-B38-10-04		1	●	049	6768430	1.135,00
M3024.152-B38-09-06		1	●	049	6943629	1.336,00
M3024.152-B38-12-04		1	●	049	6768431	1.415,00
M3255-050-B22-04-46		1	●	049	6959343	983,00
M3255-050-B22-05-46		1	●	049	6959344	1.051,00
M3255-063-B27-05-46		1	●	049	6959345	1.226,00
M3255-080-B32-05-58		1	●	049	6959347	1.537,00
M3255.051-B19-04-46		1	●	049	6959365	983,00
M3255.051-B19-05-46		1	●	049	6959366	1.051,00
M3255.051-B26-04-57		1	●	049	7440086	1.129,00
M3255.051-B26-05-57		1	●	049	7440087	1.235,00
M3255.064-B26-06-46		1	●	049	6959368	1.305,00
M3255.076-B31-05-80		1	●	049	7440089*	1.908,00
M3255.076-B31-06-58		1	●	049	6959390	1.627,00
M3255.076-B31-06-80		1	●	049	7440200*	2.071,00

Bezeichnung / Designation	Sorte / Grade	VE / US		Disc. Gr.	Article No.	EURO Stück / piece
M4002-020-A20-02-01		1	●	048	6795843	291,00
M4002-020-T18-02-01		1	●	048	6795777	291,00
M4002-020-TC10-02-01		1	●	048	7785470	277,00
M4002-025-A25-03-01		1	●	048	6795844	325,00
M4002-025-T22-02-01,5		1	●	048	6549884	308,00
M4002-025-T22-03-01		1	●	048	6795778	325,00
M4002-025-TC12-02-01,5		1	●	048	7785471	294,00
M4002-025-TC12-03-01		1	●	048	7785472	309,00
M4002-032-A32-04-01		1	●	048	6795845	360,00
M4002-032-T28-03-01,5		1	●	048	6549885	343,00
M4002-032-T28-04-01		1	●	048	6795779	360,00
M4002-032-TC16-03-01,5		1	●	048	7785473	326,00
M4002-032-TC16-04-01		1	●	048	7785474	343,00
M4002-035-T28-03-01,5		1	●	048	6549886	343,00
M4002-035-TC16-03-01		1	■	048	7785475*	326,00
M4002-035-TC16-03-01,5		1	●	048	7785476	326,00
M4002-035-TC16-04-01		1	●	048	7785477	343,00
M4002-040-B16-05-01		1	●	048	6795846	378,00
M4002-040-T36-04-01,5		1	●	048	6549887	379,00
M4002-042-B16-04-01,5		1	●	048	6841257	361,00
M4002-042-T36-03-01,5		1	●	048	6549888	361,00
M4002-050-B22-04-02		1	●	048	6796932	433,00
M4002-050-B22-05-01,5		1	●	048	6549889	453,00
M4002-050-B22-05-02		1	●	048	7023264	453,00
M4002-052-B22-04-01,5		1	●	048	6549910	433,00
M4002-052-B22-04-02		1	●	048	6913702	433,00
M4002-052-B22-05-01,5		1	●	048	6841258	453,00
M4002-052-B22-05-02		1	●	048	7023265	453,00
M4002-052-B22-06-01		1	●	048	6795849	474,00
M4002-063-B22-05-02		1	●	048	6796934	529,00
M4002-063-B22-06-01,5		1	●	048	6549911	553,00
M4002-063-B22-06-02		1	●	048	7023266	553,00
M4002-066-B27-04-02		1	●	048	6796935	505,00
M4002-066-B27-05-01,5		1	●	048	6549912	529,00
M4002-066-B27-05-02		1	●	048	6913703	529,00
M4002-066-B27-06-01,5		1	●	048	6841259	553,00
M4002-066-B27-06-02		1	●	048	7023267	553,00
M4002-080-B27-06-02		1	●	048	6796936	632,00
M4002-080-B27-08-02		1	●	048	7023268	687,00
M4002-085-B27-05-02		1	●	048	6796937	604,00
M4002-085-B27-06-02		1	●	048	6913704	632,00
M4002-085-B27-08-02		1	●	048	7023269	687,00
M4002-100-B32-07-02		1	●	048	6796938	742,00
M4002-100-B32-09-02		1	●	048	7023280	788,00
M4002-125-B40-08-02		1	●	048	6807802	859,00
M4002.019-A19-02-01		1	●	048	6795881	291,00
M4002.019-T18-02-01		1	●	048	6795857	291,00
M4002.026-A26-03-01		1	●	048	6795882	325,00
M4002.026-T22-02-01,5		1	●	048	6549915	308,00
M4002.026-T22-03-01		1	●	048	6795858	325,00
M4002.031-A31-04-01		1	●	048	6795883	360,00
M4002.031-T28-03-01,5		1	●	048	6549916	343,00
M4002.031-T28-04-01		1	●	048	6795859	360,00
M4002.038-T36-04-01,5		1	●	048	6549917	379,00
M4002.051-B19-04-02		1	●	048	6796939	433,00
M4002.051-B19-05-01,5		1	●	048	6549918	453,00
M4002.051-B19-07-01		1	●	048	6795885	495,00
M4002.064-B19-05-02		1	●	048	6796960	529,00
M4002.064-B19-06-01,5		1	●	048	6549919	553,00
M4002.076-B26-06-02		1	●	048	6796961	632,00
M4002.102-B38-07-02		1	●	048	6796962	742,00
M4003-020-A20-02-4.5		1	●	048	7021540	300,00
M4003-025-A25-02-6.5		1	●	048	7021541	318,00
M4003-025-A25-03-4.5		1	●	048	7021542	334,00
M4003-032-A32-04-4.5		1	●	048	7021543	370,00
M4003-032-B16-04-4.5		1	●	048	7021545	353,00
M4003-032-B16-05-4.5		1	●	048	7021546	370,00
M4003-040-B16-04-4.5		1	●	048	7021549	371,00
M4003-040-B16-04-6.5		1	●	048	7021550	371,00
M4003-040-B16-06-4.5		1	●	048	7021551	407,00

Bezeichnung / Designation	Sorte / Grade	VE / US		Disc. Gr.	Article No.	EURO Stück / piece
M4003-050-B22-04-6.5		1	●	048	7021552	446,00
M4003-050-B22-05-6.5		1	●	048	7021553	467,00
M4003-050-B22-06-4.5		1	●	048	7021554	488,00
M4003-050-B22-08-4.5		1	●	048	7021555	531,00
M4003-063-B22-05-6.5		1	●	048	7021556	545,00
M4003-063-B22-07-4.5		1	●	048	7021557	594,00
M4003-063-B22-07-6.5		1	●	048	7021558	594,00
M4003-063-B22-10-4.5		1	●	048	7021559	644,00
M4003-080-B27-06-6.5		1	●	048	7021560	651,00
M4003-080-B27-08-4.5		1	●	048	7021561	707,00
M4003-080-B27-09-6.5		1	●	048	7021562	722,00
M4003-080-B27-12-4.5		1	●	048	7021563	764,00
M4003-100-B32-07-6.5		1	●	048	7021564	764,00
M4003-100-B32-09-4.5		1	●	048	7021565	812,00
M4003-100-B32-11-6.5		1	●	048	7021566	844,00
M4003-100-B32-14-4.5		1	●	048	7021567	891,00
M4003-125-B40-08-6.5		1	●	048	7021568	884,00
M4003-125-B40-13-6.5		1	●	048	7021569	973,00
M4003-160-B40-09-6.5		1	●	048	7021570	1.082,00
M4003-160-B40-15-6.5		1	●	048	7021571	1.210,00
M4003.019-A19-02-4.5		1	●	048	7021643	300,00
M4003.026-A26-03-4.5		1	●	048	7021644	334,00
M4003.031-A31-04-4.5		1	■	048	7021646*	370,00
M4003.031-B13-04-4.5		1	●	048	7021648	353,00
M4003.038-B19-04-4.5		1	●	048	7021651	371,00
M4003.051-B19-04-6.5		1	●	048	7021652	446,00
M4003.051-B19-06-4.5		1	●	048	7021653	488,00
M4003.064-B26-05-6.5		1	●	048	7021655	545,00
M4003.064-B26-07-4.5		1	●	048	7021654	594,00
M4003.076-B26-06-6.5		1	●	048	7021657	651,00
M4003.076-B26-08-4.5		1	●	048	7021656	707,00
M4003.102-B38-07-6.5		1	●	048	7021658	764,00
M4003.102-B38-09-4.5		1	●	048	7021659	812,00
M4003.127-B38-08-6.5		1	●	048	7021660	884,00
M4003.152-B38-09-6.5		1	●	048	7021661	1.082,00
M4130-016-W16-02-08		1	■	048	6952591*	274,00
M4130-020-W20-03-08		1	●	048	6952593*	307,00
M4130-025-W25-04-08		1	●	048	6952597*	341,00
M4130-032-W32-04-13		1	■	048	6952599*	360,00
M4130-040-B16-05-13		1	■	048	6952601*	378,00
M4130-050-B22-05-16		1	■	048	6952605*	453,00
M4130-050-B22-06-13		1	■	048	6952602*	474,00
M4130-063-B27-06-16		1	■	048	6952606*	553,00
M4130-080-B27-07-16		1	■	048	6952607*	659,00
M4132-016-T14-02-06		1	●	048	6741138	274,00
M4132-016-TC08-02-06		1	●	048	7785483	261,00
M4132-016-W16-02-06		1	●	048	6741173	274,00
M4132-020-T18-02-06		1	●	048	6741170	291,00
M4132-020-T18-03-06		1	●	048	6741139	307,00
M4132-020-TC10-02-06		1	●	048	7785484	277,00
M4132-020-TC10-03-06		1	●	048	7785485	292,00
M4132-020-W20-02-06		1	●	048	6741175	291,00
M4132-020-W20-03-06		1	●	048	6741174	307,00
M4132-025-T22-02-09		1	●	048	6556116	308,00
M4132-025-T22-03-06		1	●	048	6741171	325,00
M4132-025-T22-04-06		1	●	048	6741172	341,00
M4132-025-TC12-02-09		1	●	048	7785486	294,00
M4132-025-TC12-03-06		1	●	048	7785487	309,00
M4132-025-TC12-04-06		1	●	048	7785488	325,00
M4132-025-W25-02-09		1	●	048	6556143	308,00
M4132-025-W25-03-06		1	●	048	6741176	325,00
M4132-025-W25-04-06		1	●	048	6741177	341,00
M4132-032-T28-03-09		1	●	048	6556117	343,00
M4132-032-TC16-02-09		1	●	048	7785489	310,00
M4132-032-TC16-03-09		1	●	048	7785490	326,00
M4132-032-W32-02-09		1	●	048	6556145	325,00
M4132-032-W32-03-09		1	●	048	6556144	343,00
M4132-040-B16-04-09		1	●	048	6556149	361,00
M4132-040-B16-05-09		1	●	048	6556148	378,00
M4132-040-T36-04-09		1	●	048	6556119	379,00

Bezeichnung / Designation	Sorte / Grade	VE / US		Disc. Gr.	Article No.	EURO Stück / piece
M4132-040-W40-04-09		1	●	048	6556146	379,00
M4132-050-B22-04-09		1	●	048	6556151	433,00
M4132-050-B22-04-12		1	●	048	6741187	433,00
M4132-050-B22-05-12		1	●	048	6741188	453,00
M4132-050-B22-06-09		1	●	048	6556150	474,00
M4132-050-T45-06-09		1	●	048	6556141	498,00
M4132-063-B22-05-09		1	●	048	6556153	529,00
M4132-063-B22-05-12		1	●	048	6741189	529,00
M4132-063-B22-06-12		1	●	048	6741200	553,00
M4132-063-B22-07-09		1	●	048	6556152	577,00
M4132-080-B27-06-09		1	●	048	6556155	632,00
M4132-080-B27-06-12		1	●	048	6741201	632,00
M4132-080-B27-08-09		1	●	048	6556154	687,00
M4132-080-B27-08-12		1	●	048	6741202	687,00
M4132-100-B32-07-12		1	●	048	6741203	742,00
M4132-100-B32-09-12		1	●	048	6741204	788,00
M4132-125-B40-08-12		1	●	048	6741205	859,00
M4132-125-B40-10-12		1	●	048	6741206	893,00
M4132.015-W15-02-06		1	●	048	6741180	274,00
M4132.019-W19-03-06		1	●	048	6741181	307,00
M4132.026-W26-02-09		1	●	048	6556157	308,00
M4132.031-W31-03-09		1	●	048	6556158	343,00
M4132.038-B13-05-09		1	●	048	6556170	378,00
M4132.051-B19-04-12		1	●	048	6741208	433,00
M4132.051-B19-06-09		1	●	048	6556171	474,00
M4132.064-B26-05-12		1	●	048	6741209	529,00
M4132.064-B26-07-09		1	●	048	6556172	577,00
M4132.076-B26-06-12		1	●	048	6741220	632,00
M4132.076-B26-08-09		1	●	048	6556173	687,00
M4256-020-W20-01-27		1	●	048	6903551	736,00
M4256-025-T22-02-27		1	●	048	6903552	879,00
M4256-025-W25-02-27		1	●	048	6903553	921,00
M4256-032-T28-02-37		1	●	048	6903554	999,00
M4256-032-W32-02-37		1	●	048	6903555	1.047,00
M4257-040-T36-02-54		1	●	048	6903587	1.089,00
M4257-040-W40-02-54		1	●	048	6903588	1.141,00
M4257-050-B22-02-47		1	●	048	6903589	1.202,00
M4257-063-B27-03-54		1	●	048	6903620	1.652,00
M4257.038-W38-02-54		1	●	048	6903652	1.141,00
M4257.051-B19-02-47		1	●	048	6903653	1.202,00
M4257.064-B26-03-54		1	■	048	6903654*	1.652,00
M4258-050-C6-02-50-B		1	●	048	7457858	1.470,00
M4258-050-C6-02-75-M		1	●	048	7458150	2.131,00
M4258-050-P20-02-25-F		1	●	048	7457859	559,00
M4258-063-C8-02-60-B		1	●	048	7457940	1.781,00
M4258-063-C8-02-96-M		1	●	048	7458151	2.615,00
M4258-063-P30-02-36-F		1	●	048	7457941	709,00
M4258-080-B32-03-67		1	●	048	6903672	1.705,00
M4258-080-C8-03-116-M		1	●	048	7458152	3.531,00
M4258-080-C8-03-80-B		1	●	048	7457942	2.488,00
M4258-080-P40-03-36-F		1	●	048	7457943	875,00
M4258-100-B40-04-77		1	●	048	6903673	2.448,00
M4258.076-B31-03-67		1	●	048	6903694	1.705,00
M4258.102-B38-04-77		1	●	048	6903695	2.448,00
M4574-008-A12-01-03		1	●	048	6689693	225,00
M4574-008-A12-01-03-30		1	●	048	7932680	225,00
M4574-008-A12-01-03-60		1	●	048	7932681	225,00
M4574-010-A12-01-03		1	●	048	6689694	242,00
M4574-012-A16-01-05		1	●	048	6556077	259,00
M4574-012-A16-02-03		1	●	048	6689695	274,00
M4574-012-A16-02-03-30		1	●	048	7932682	274,00
M4574-012-A16-02-03-60		1	●	048	7932683	274,00
M4574-012-T09-02-03		1	●	048	6689690	261,00
M4574-012-TC06-02-03		1	●	048	7785491	249,00
M4574-016-A16-02-05		1	●	048	6689696	292,00
M4574-016-A16-03-03		1	●	048	6689697	307,00
M4574-016-A16-03-03-30		1	●	048	7932684	292,00
M4574-016-A16-03-03-60		1	●	048	7932685	292,00
M4574-016-T14-03-03		1	●	048	6689691	293,00
M4574-016-TC08-03-03		1	●	048	7785492	279,00

Bezeichnung / Designation	Sorte / Grade	VE / US		Disc. Gr.	Article No.	EURO Stück / piece
M4574-020-A20-02-05		1	●	048	6556078	310,00
M4574-020-A20-02-05-30		1	●	048	7932686	310,00
M4574-020-A20-02-05-60		1	●	048	7932687	310,00
M4574-020-T18-02-05		1	●	048	6556074	296,00
M4574-020-TC10-02-05		1	●	048	7785493	282,00
M4574-025-A25-02-07		1	●	048	6689698	328,00
M4574-025-A25-03-05		1	●	048	6556079	346,00
M4574-025-T22-03-05		1	●	048	6556075	330,00
M4574-025-TC12-03-05		1	●	048	7785494	314,00
M4574-032-A32-03-05		1	●	048	6556110	365,00
M4574-032-A32-03-07		1	●	048	6689699	365,00
M4574-032-T28-03-05		1	●	048	6556076	348,00
M4574-032-T28-03-07		1	●	048	6689692	348,00
M4574-032-TC16-03-05		1	●	048	7785495	332,00
M4574-032-TC16-03-07		1	●	048	7785496	332,00
M4574-040-A32-03-07		1	●	048	6689700	384,00
M4574-040-A32-04-05		1	●	048	6556111	403,00
M4574.013-A15-01-05		1	●	048	6556112	259,00
M4574.019-A19-02-05		1	●	048	6556113	310,00
M4574.019-A19-02-05-30		1	●	048	7932518	310,00
M4574.019-A19-02-05-60		1	●	048	7932519	310,00
M4574.026-A26-03-05		1	●	048	6556114	346,00
M4574.031-A31-03-05		1	●	048	6556115	365,00
M4574.038-A38-03-07		1	●	048	6689701	384,00
M4575-021-W12-02-09		1	●	048	6795935	374,00
M4575-025-W16-02-11		1	●	048	6795936	396,00
M4575-032-W20-02-14		1	●	048	6795937	418,00
M4575-040-W25-02-17		1	●	048	6795938	440,00
M4575-050-W32-02-21		1	●	048	6795939	528,00
M4575.019-W19-01-08		1	●	048	6795970	354,00
M4575.024-W19-02-09		1	●	048	6795971	396,00
M4575.031-W26-02-12		1	●	048	6795972	418,00
M4575.037-W26-02-15		1	●	048	6795973	440,00
M4575.047-W31-02-21		1	●	048	6795974	528,00
M4791.019-W19-01-06		1	●	048	7413871	306,00
M4791.026-W26-01-09		1	●	048	7413872	324,00
M4791.028-W19-01-09		1	●	048	7932688	324,00
M4791.031-W31-01-12		1	●	048	7413873	342,00
M4791.035-W31-01-12		1	●	048	7932689	342,00
M4791.038-W31-01-12		1	●	048	7413874	360,00
M4791.044-W31-01-12		1	●	048	7932690	361,00
M4792-018-W16-01-08		1	●	048	6822365	275,00
M4792-020-W20-01-13		1	●	048	6822366	292,00
M4792-025-W25-01-13		1	●	048	6822367	310,00
M4792-030-W32-01-20		1	●	048	6822368	327,00
M4792-032-W32-01-20		1	●	048	6822369	327,00
M4792-040-W32-01-26		1	●	048	6822380	344,00
M4792.019-W26-01-13		1	●	048	6866209	292,00
M4792.026-W26-01-13		1	●	048	6866261	310,00
M4792.031-W31-01-20		1	●	048	6866262	327,00
M4792.038-W31-01-26		1	●	048	6866263	344,00
M5004-032-A20-02-03		1	●	049	7935019	367,00
M5004-032-A25-02-03		1	●	049	7935270	367,00
M5004-032-T28-02-03		1	●	049	7923399	367,00
M5004-032-TC16-02-03		1	●	049	7923403	350,00
M5004-040-A20-03-03		1	●	049	7935271	407,00
M5004-040-A25-03-03		1	●	049	7935272	407,00
M5004-040-T36-03-03		1	●	049	7923400	407,00
M5004-050-B16-03-04		1	●	049	7923368	465,00
M5004-050-B16-04-03		1	●	049	7923341	488,00
M5004-050-B16-05-03		1	●	049	7923342	511,00
M5004-052-B22-03-04		1	●	049	7923369	465,00
M5004-052-B22-04-03		1	●	049	7923343	488,00
M5004-052-B22-05-03		1	●	049	8078857	511,00
M5004-058-B16-04-03		1	●	049	7923344	569,00
M5004-058-B16-05-03		1	●	049	7923345	596,00
M5004-060-B16-03-04		1	●	049	7923370	542,00
M5004-063-B22-04-04		1	●	049	7923371	569,00
M5004-063-B22-05-03		1	●	049	7923346	596,00
M5004-063-B22-05-04		1	●	049	7923372	596,00

Bezeichnung / Designation	Sorte / Grade	VE / US		Disc. Gr.	Article No.	EURO Stück / piece
M5004-063-B22-06-03		1	●	049	7923347	624,00
M5004-063-B22-06-04		1	●	049	7923373	624,00
M5004-063-B22-07-03		1	●	049	7923348	651,00
M5004-066-B27-05-04		1	●	049	7923374	596,00
M5004-066-B27-06-03		1	●	049	8078858	624,00
M5004-066-B27-06-04		1	●	049	8078854	624,00
M5004-066-B27-07-03		1	●	049	8078859	651,00
M5004-071-B22-06-03		1	●	049	7923350	668,00
M5004-071-B22-07-03		1	●	049	7923351	697,00
M5004-073-B22-05-04		1	●	049	7923375	639,00
M5004-073-B22-06-04		1	●	049	7923376	668,00
M5004-080-B27-05-04		1	●	049	7923377	682,00
M5004-080-B27-06-03		1	●	049	7923352	713,00
M5004-080-B27-06-04		1	●	049	7923378	713,00
M5004-080-B27-07-03		1	●	049	7923353	744,00
M5004-080-B27-07-04		1	●	049	7923379	744,00
M5004-080-B27-08-03		1	●	049	7923354	775,00
M5004-088-B27-07-03		1	●	049	7923355	790,00
M5004-088-B27-08-03		1	●	049	7923356	823,00
M5004-090-B27-06-04		1	●	049	7923380	757,00
M5004-090-B27-07-04		1	●	049	7923381	790,00
M5004-100-B32-07-04		1	●	049	7923383	837,00
M5004-100-B32-08-03		1	●	049	7923358	871,00
M5004-100-B32-09-04		1	●	049	7923384	889,00
M5004-100-B32-10-03		1	●	049	7923359	906,00
M5004-108-B32-08-03		1	●	049	7923360	920,00
M5004-108-B32-10-03		1	●	049	7923361	957,00
M5004-110-B32-07-04		1	●	049	7923385	883,00
M5004-110-B32-09-04		1	●	049	7923386	938,00
M5004-125-B40-08-04		1	●	049	7923388	968,00
M5004-125-B40-10-03		1	●	049	7923363	1.007,00
M5004-125-B40-10-04		1	●	049	7923389	1.007,00
M5004-125-B40-12-03		1	●	049	7923364	1.046,00
M5004-135-B40-08-04		1	●	049	7923390	1.065,00
M5004-135-B40-10-04		1	●	049	7923391	1.108,00
M5004-160-B40-09-04		1	●	049	7923393	1.185,00
M5004-160-B40-11-04		1	●	049	7923394	1.232,00
M5004-170-B40-09-04		1	●	049	7923395	1.235,00
M5004-170-B40-11-04		1	●	049	7923396	1.283,00
M5004.031-T28-02-03		1	●	049	7923446	367,00
M5004.038-A26-03-03		1	●	049	8269560	386,00
M5004.038-T36-03-03		1	●	049	7923447	407,00
M5004.046-A31-03-03		1	●	049	8269561	488,00
M5004.059-B19-04-03		1	●	049	7923406	569,00
M5004.059-B19-05-03		1	●	049	7923407	596,00
M5004.072-B19-06-03		1	●	049	7923421	668,00
M5004.072-B19-07-03		1	●	049	7923422	697,00
M5004.076-B26-07-03		1	●	049	7923424	744,00
M5004.084-B26-07-03		1	●	049	7923426	744,00
M5004.084-B26-08-03		1	●	049	7923427	775,00
M5004.086-B26-06-04		1	●	049	7923438	757,00
M5004.086-B26-07-04		1	●	049	7923439	790,00
M5004.112-B38-07-04		1	●	049	7923443	883,00
M5004.112-B38-09-04		1	●	049	7923444	938,00
M5004.137-B38-08-04		1	●	049	8269562	1.065,00
M5004.137-B38-09-04		1	●	049	7963396	1.086,00
M5004.162-B38-09-04		1	●	049	8269563	1.185,00
M5004.162-B38-10-04		1	●	049	7963397	1.208,00
M5008-016-A16-02-01		1	●	049	7721676	320,00
M5008-016-T14-02-01		1	●	049	7721740	320,00
M5008-016-TC08-02-01		1	●	049	7721755	305,00
M5008-020-A20-03-01		1	●	049	7721677	358,00
M5008-020-A20-04-01		1	●	049	7721678	375,00
M5008-020-T18-03-01		1	●	049	7721741	358,00
M5008-020-T18-04-01		1	●	049	7721742	375,00
M5008-020-TC10-03-01		1	●	049	7721756	341,00
M5008-020-TC10-04-01		1	●	049	7721757	358,00
M5008-025-A25-04-01		1	●	049	7721679	398,00
M5008-025-A25-05-01		1	●	049	7721720	416,00
M5008-025-T22-04-01		1	●	049	7721743	398,00

Bezeichnung / Designation	Sorte / Grade	VE / US		Disc. Gr.	Article No.	EURO Stück / piece
M5008-025-T22-05-01		1	●	049	7721744	416,00
M5008-025-TC12-04-01		1	●	049	7721758	379,00
M5008-025-TC12-05-01		1	●	049	7721759	397,00
M5008-030-T28-04-01		1	●	049	7721745	420,00
M5008-030-T28-05-01		1	●	049	7721746	440,00
M5008-030-TC16-04-01		1	●	049	7721760	400,00
M5008-030-TC16-05-01		1	●	049	7721761	419,00
M5008-032-A32-05-01		1	●	049	7721721	440,00
M5008-032-A32-06-01		1	●	049	7721722	460,00
M5008-032-B16-05-01		1	●	049	7721724	419,00
M5008-032-B16-06-01		1	●	049	7721725	438,00
M5008-032-T28-05-01		1	●	049	7721747	440,00
M5008-032-T28-06-01		1	●	049	7721748	460,00
M5008-032-TC16-05-01		1	●	049	7721762	419,00
M5008-032-TC16-06-01		1	●	049	7721763	438,00
M5008-035-B16-05-01		1	●	049	7721726	419,00
M5008-035-B16-06-01		1	●	049	7721727	438,00
M5008-035-T28-05-01		1	●	049	7721749	440,00
M5008-035-T28-06-01		1	●	049	7721750	460,00
M5008-035-TC16-05-01		1	●	049	7721764	419,00
M5008-035-TC16-06-01		1	●	049	7721765	438,00
M5008-040-B16-06-01		1	●	049	7721728	461,00
M5008-040-B16-08-01		1	●	049	7721729	501,00
M5008-040-T36-06-01		1	●	049	7721751	484,00
M5008-040-T36-08-01		1	●	049	7721752	526,00
M5008-040-TC16-06-01		1	●	049	8131073	460,00
M5008-040-TC16-08-01		1	●	049	8131074	500,00
M5008-042-B16-06-01		1	●	049	7721730	461,00
M5008-042-B16-08-01		1	●	049	7721731	501,00
M5008-042-T36-06-01		1	●	049	7721753	484,00
M5008-042-T36-08-01		1	●	049	7721754	526,00
M5008-042-TC16-06-01		1	●	049	8131075	460,00
M5008-042-TC16-08-01		1	●	049	8131076	500,00
M5008-050-B22-07-01		1	●	049	7721732	577,00
M5008-050-B22-09-01		1	●	049	7721733	613,00
M5008-052-B22-07-01		1	●	049	7721734	577,00
M5008-052-B22-09-01		1	●	049	7721735	613,00
M5008-063-B22-08-01		1	●	049	7721736	701,00
M5008-063-B22-10-01		1	●	049	7721737	729,00
M5008-066-B27-08-01		1	●	049	7721738	701,00
M5008-066-B27-10-01		1	●	049	7721739	729,00
M5008.015-A15-02-01		1	●	049	7721766	320,00
M5008.015-A15-02-01-L		1	●	049	8379078	320,00
M5008.015-T14-02-01		1	●	049	7721777	320,00
M5008.019-A19-03-01		1	●	049	7721767	358,00
M5008.019-A19-03-01-L		1	●	049	8379079	358,00
M5008.019-T18-03-01		1	●	049	7721778	358,00
M5008.026-A26-04-01		1	●	049	7721769	398,00
M5008.026-A26-04-01-L		1	●	049	8379110	398,00
M5008.026-A26-05-01		1	●	049	7721770	416,00
M5008.026-A26-05-01-L		1	●	049	8379111	416,00
M5008.026-T22-04-01		1	●	049	7721800	398,00
M5008.026-T22-05-01		1	●	049	7721801	416,00
M5008.031-T28-05-01		1	●	049	7721802	440,00
M5008.031-T28-06-01		1	●	049	7721803	460,00
M5008.038-B19-06-01		1	●	049	7721771	461,00
M5008.038-B19-08-01		1	●	049	7721772	501,00
M5008.038-T36-06-01		1	●	049	7721804	484,00
M5008.038-T36-08-01		1	●	049	7721805	526,00
M5008.051-B19-07-01		1	●	049	7721773	577,00
M5008.051-B19-09-01		1	●	049	7721774	613,00
M5008.064-B26-08-01		1	●	049	7721775	701,00
M5008.064-B26-10-01		1	●	049	7721776	729,00
M5009-040-B16-04-05		1	●	049	7659533	421,00
M5009-040-B16-06-05		1	●	049	7659534	461,00
M5009-040-T36-04-06-AP		1	●	049	7871970	460,00
M5009-050-B22-04-06-AP		1	●	049	7871896	525,00
M5009-050-B22-06-05		1	●	049	7659535	553,00
M5009-050-B22-06-06		1	●	049	7871897	553,00
M5009-050-B22-08-05		1	●	049	7659536	601,00

Bezeichnung / Designation	Sorte / Grade	VE / US		Disc. Gr.	Article No.	EURO Stück / piece
M5009-063-B22-06-06-AP		1	●	049	7871898	684,00
M5009-063-B22-07-05		1	●	049	7659537	673,00
M5009-063-B22-08-06		1	●	049	7871899	701,00
M5009-063-B22-09-05		1	●	049	7659538	715,00
M5009-063-B27-06-06-AP		1	●	049	7871920	684,00
M5009-063-B27-08-06		1	●	049	7871921	701,00
M5009-080-B27-05-06-AP		1	●	049	7871922	741,00
M5009-080-B27-07-06-AP		1	●	049	7871923	824,00
M5009-080-B27-08-05		1	●	049	7659539	801,00
M5009-080-B27-10-06		1	●	049	7871924	833,00
M5009-080-B27-11-05		1	●	049	7659550	849,00
M5009-100-B32-06-06-AP		1	●	049	7871925	880,00
M5009-100-B32-08-06-AP		1	●	049	7871926	975,00
M5009-100-B32-09-05		1	●	049	7659551	920,00
M5009-100-B32-12-06		1	●	049	7871927	974,00
M5009-100-B32-13-05		1	●	049	7659552	992,00
M5009-125-B40-07-06-AP		1	●	049	7871928	1.030,00
M5009-125-B40-10-06-AP		1	●	049	7871929	1.147,00
M5009-125-B40-16-06		1	●	049	7871930	1.162,00
M5009-160-B40-08-06-AP		1	●	049	7871931	1.299,00
M5009-160-B40-12-06-AP		1	●	049	7871932	1.456,00
M5009-160-B40-20-06		1	●	049	7871933	1.491,00
M5009.038-B19-04-05		1	■	049	7659583*	421,00
M5009.038-B19-06-05		1	■	049	7659584*	461,00
M5009.051-B19-04-06-AP		1	●	049	7871934	525,00
M5009.051-B19-06-05		1	●	049	7659585	553,00
M5009.051-B19-06-06		1	●	049	7871935	553,00
M5009.051-B19-08-05		1	●	049	7659586	601,00
M5009.064-B26-06-06-AP		1	●	049	7871936	684,00
M5009.064-B26-07-05		1	●	049	7659587	673,00
M5009.064-B26-08-06		1	●	049	7871937	701,00
M5009.064-B26-09-05		1	●	049	7659588	715,00
M5009.076-B26-07-06-AP		1	●	049	7871938	824,00
M5009.076-B26-08-05		1	●	049	7659589	801,00
M5009.076-B26-09-06		1	●	049	7871939	817,00
M5009.076-B26-11-05		1	●	049	7659600	849,00
M5009.102-B38-08-06-AP		1	●	049	7871950	975,00
M5009.102-B38-09-05		1	●	049	7659601	920,00
M5009.102-B38-12-06		1	●	049	7871951	974,00
M5009.127-B38-10-06-AP		1	●	049	7871952	1.147,00
M5009.127-B38-16-06		1	●	049	7871953	1.162,00
M5009.152-B38-12-06-AP		1	●	049	7871954	1.456,00
M5009.152-B38-19-06		1	●	049	7871955	1.466,00
M5011-050-B22-04-08-AP		1	●	049	8242070	525,00
M5011-063-B22-05-08-AP		1	●	049	8242071	678,00
M5011-063-B22-07-08		1	●	049	8242072	673,00
M5011-063-B27-05-08-AP		1	●	049	8242073	678,00
M5011-063-B27-07-08		1	●	049	8242074	673,00
M5011-080-B27-07-08-AP		1	●	049	8242075	824,00
M5011-080-B27-09-08		1	●	049	8242076	817,00
M5011-100-B32-08-08-AP		1	●	049	8242077	975,00
M5011-100-B32-11-08		1	●	049	8242078	956,00
M5011-125-B40-10-08-AP		1	●	049	8242079	1.147,00
M5011-125-B40-14-08		1	●	049	8242080	1.122,00
M5011-160-B40-18-08		1	●	049	8242081	1.442,00
M5012-040-B16-04-08		1	●	049	7769807	421,00
M5012-050-B22-04-10-AP		1	●	049	7871957	525,00
M5012-050-B22-05-08		1	●	049	7769808	529,00
M5012-050-B22-06-08		1	●	049	7769809	553,00
M5012-063-B22-05-10-AP		1	●	049	7871958	648,00
M5012-063-B22-06-08		1	●	049	7769830	645,00
M5012-063-B22-07-10		1	●	049	7871959	673,00
M5012-063-B22-08-08		1	●	049	7769831	701,00
M5012-063-B27-05-10-AP		1	●	049	7871960	648,00
M5012-063-B27-06-08		1	●	049	7769832	645,00
M5012-063-B27-07-10		1	●	049	7871961	673,00
M5012-063-B27-08-08		1	●	049	7769833	701,00
M5012-080-B27-07-08		1	●	049	7769834	769,00
M5012-080-B27-07-10-AP		1	●	049	7871962	824,00
M5012-080-B27-09-10		1	●	049	7871963	817,00

Bezeichnung / Designation	Sorte / Grade	VE / US		Disc. Gr.	Article No.	EURO Stück / piece
M5012-080-B27-10-08		1	●	049	7769835	833,00
M5012-100-B32-08-08		1	●	049	7769836	902,00
M5012-100-B32-08-10-AP		1	●	049	7871964	975,00
M5012-100-B32-11-10		1	●	049	7871965	956,00
M5012-100-B32-12-08		1	●	049	7769837	974,00
M5012-125-B40-10-10-AP		1	●	049	7871966	1.147,00
M5012-125-B40-14-10		1	●	049	7871967	1.122,00
M5012-160-B40-12-10-AP		1	●	049	7871968	1.456,00
M5012-160-B40-18-10		1	●	049	7871969	1.442,00
M5130-010-A10-02-05		1	●	049	7538807	266,00
M5130-010-A16-02-05		1	●	049	7622303	266,00
M5130-010-T09-02-05		1	●	049	7538908	266,00
M5130-010-TC06-02-05		1	●	049	7714609	254,00
M5130-010-W10-02-05		1	●	049	7538921	266,00
M5130-010-W16-02-05		1	●	049	7622305	266,00
M5130-012-A12-03-05		1	●	049	7538808	301,00
M5130-012-A16-03-05		1	●	049	7622304	301,00
M5130-012-T09-03-05		1	●	049	7538909	301,00
M5130-012-TC06-03-05		1	●	049	7714660	286,00
M5130-012-W12-03-05		1	●	049	7538922	301,00
M5130-012-W16-03-05		1	●	049	7622306	301,00
M5130-014-A16-03-05		1	●	049	7538809	311,00
M5130-016-A16-02-09		1	●	049	7539335	305,00
M5130-016-A16-03-05		1	●	049	7538900	321,00
M5130-016-A16-04-05		1	●	049	7538901	337,00
M5130-016-T14-02-09		1	●	049	7539370	305,00
M5130-016-T14-03-05		1	●	049	7538910	321,00
M5130-016-T14-04-05		1	●	049	7538911	337,00
M5130-016-TC08-02-09		1	●	049	7737986	290,00
M5130-016-TC08-03-05		1	●	049	7714661	305,00
M5130-016-TC08-04-05		1	●	049	7714662	321,00
M5130-016-W16-02-09		1	●	049	7539363	305,00
M5130-016-W16-03-05		1	●	049	7538923	321,00
M5130-016-W16-04-05		1	●	049	7538924	337,00
M5130-018-A16-02-09		1	●	049	7539336	305,00
M5130-018-A16-03-05		1	●	049	7538902	321,00
M5130-020-A20-02-09		1	●	049	7539337	324,00
M5130-020-A20-03-09		1	●	049	7539338	341,00
M5130-020-A20-04-05		1	●	049	7538903	358,00
M5130-020-A20-05-05		1	●	049	7538904	375,00
M5130-020-T18-02-09		1	●	049	7539371	324,00
M5130-020-T18-03-09		1	●	049	7539372	341,00
M5130-020-T18-04-05		1	●	049	7538912	358,00
M5130-020-T18-05-05		1	●	049	7538913	375,00
M5130-020-TC10-02-09		1	●	049	7737987	308,00
M5130-020-TC10-03-09		1	●	049	7737988	324,00
M5130-020-TC10-04-05		1	●	049	7714663	341,00
M5130-020-TC10-05-05		1	●	049	7714664	357,00
M5130-020-W20-02-09		1	●	049	8407351	324,00
M5130-020-W20-03-09		1	●	049	7539364	341,00
M5130-020-W20-04-05		1	●	049	7538925	358,00
M5130-020-W20-05-05		1	●	049	7538926	375,00
M5130-022-A20-02-12		1	●	049	7540044	324,00
M5130-022-A20-03-09		1	●	049	7540029	341,00
M5130-022-A20-04-05		1	●	049	7538905	358,00
M5130-025-A25-02-12		1	●	049	7539412	343,00
M5130-025-A25-02-15		1	●	049	7540045	343,00
M5130-025-A25-03-09		1	●	049	7539339	361,00
M5130-025-A25-03-12		1	●	049	7539413	361,00
M5130-025-A25-04-09		1	●	049	7539360	379,00
M5130-025-A25-05-05		1	●	049	7538906	397,00
M5130-025-A25-07-05		1	●	049	7538907	433,00
M5130-025-T22-03-09		1	●	049	7539373	361,00
M5130-025-T22-03-12		1	●	049	7539422	361,00
M5130-025-T22-04-09		1	●	049	7539374	379,00
M5130-025-T22-05-05		1	●	049	7538914	397,00
M5130-025-T22-07-05		1	●	049	7538915	433,00
M5130-025-TC12-03-09		1	●	049	7737989	343,00
M5130-025-TC12-03-12		1	●	049	7737981	343,00
M5130-025-TC12-04-09		1	●	049	7738030	361,00

Bezeichnung / Designation	Sorte / Grade	VE / US		Disc. Gr.	Article No.	EURO Stück / piece
M5130-025-TC12-05-05		1	●	049	7714665	378,00
M5130-025-TC12-07-05		1	●	049	7714666	412,00
M5130-025-W25-02-15		1	●	049	7539481	343,00
M5130-025-W25-03-12		1	●	049	7539418	361,00
M5130-025-W25-04-09		1	●	049	7539365	379,00
M5130-025-W25-05-05		1	●	049	7538927	397,00
M5130-025-W25-07-05		1	●	049	7538928	433,00
M5130-028-A25-02-15		1	●	049	7540046	352,00
M5130-032-A32-03-12		1	●	049	7539414	381,00
M5130-032-A32-03-15		1	●	049	7540047	381,00
M5130-032-A32-04-12		1	●	049	7539415	400,00
M5130-032-B16-03-09		1	●	049	7622342	363,00
M5130-032-B16-06-05		1	●	049	7546102	417,00
M5130-032-B16-06-09		1	●	049	7622343	417,00
M5130-032-B16-08-05		1	●	049	7546103	453,00
M5130-032-T28-03-12		1	●	049	7539423	381,00
M5130-032-T28-03-15		1	●	049	7539483	381,00
M5130-032-T28-04-09		1	●	049	7539375	400,00
M5130-032-T28-04-12		1	●	049	7539424	400,00
M5130-032-T28-05-09		1	●	049	7539376	419,00
M5130-032-T28-06-05		1	●	049	7538916	438,00
M5130-032-T28-08-05		1	●	049	7538917	476,00
M5130-032-TC16-03-12		1	●	049	7737982	363,00
M5130-032-TC16-03-15		1	●	049	7737970	363,00
M5130-032-TC16-04-09		1	●	049	7738031	381,00
M5130-032-TC16-04-12		1	●	049	7737983	381,00
M5130-032-TC16-05-09		1	●	049	7738032	399,00
M5130-032-TC16-06-05		1	●	049	7714667	417,00
M5130-032-TC16-08-05		1	●	049	7714668	453,00
M5130-032-W32-03-12		1	●	049	7539419	381,00
M5130-032-W32-03-15		1	●	049	7539482	381,00
M5130-032-W32-04-12		1	●	049	7539420	400,00
M5130-032-W32-05-09		1	●	049	7539366	419,00
M5130-035-A32-03-15		1	●	049	7540048	381,00
M5130-040-A32-05-12		1	●	049	7539416	441,00
M5130-040-A40-04-12		1	●	049	7539417	421,00
M5130-040-B16-03-12		1	●	049	7539427	382,00
M5130-040-B16-03-15		1	●	049	7539488	382,00
M5130-040-B16-04-09		1	●	049	7539378	401,00
M5130-040-B16-04-12		1	●	049	7539428	401,00
M5130-040-B16-04-15		1	●	049	7539489	401,00
M5130-040-B16-05-12		1	●	049	8407353	420,00
M5130-040-B16-06-09		1	●	049	8407360	439,00
M5130-040-B16-06-12		1	●	049	7539429	439,00
M5130-040-B16-07-05		1	●	049	7538942	458,00
M5130-040-B16-07-09		1	●	049	7539379	458,00
M5130-040-B16-10-05		1	●	049	7538943	496,00
M5130-040-T36-03-12		1	●	049	7539425	401,00
M5130-040-T36-03-15		1	●	049	7539484	401,00
M5130-040-T36-04-15		1	●	049	7539485	421,00
M5130-040-T36-05-12		1	●	049	8407356	441,00
M5130-040-T36-06-12		1	●	049	7539426	461,00
M5130-040-T36-07-05		1	●	049	7538918	481,00
M5130-040-T36-10-05		1	●	049	7538919	521,00
M5130-040-TC16-03-12		1	●	049	7737984	382,00
M5130-040-TC16-03-15		1	●	049	7737971	382,00
M5130-040-TC16-04-15		1	●	049	7737972	401,00
M5130-040-TC16-06-12		1	●	049	7737985	439,00
M5130-040-TC16-07-05		1	●	049	7714669	458,00
M5130-040-TC16-10-05		1	●	049	7714670	496,00
M5130-040-W32-05-12		1	●	049	8407357	441,00
M5130-040-W32-06-12		1	●	049	7539421	461,00
M5130-042-B16-03-15		1	●	049	7540040	382,00
M5130-050-B22-03-12		1	●	049	7539430	458,00
M5130-050-B22-03-15		1	●	049	7539490	458,00
M5130-050-B22-04-12		1	●	049	7539431	481,00
M5130-050-B22-05-09		1	●	049	7539390	504,00
M5130-050-B22-05-15		1	●	049	8407352	504,00
M5130-050-B22-06-12		1	●	049	8407361	527,00
M5130-050-B22-06-15		1	●	049	7539491	527,00

Bezeichnung / Designation	Sorte / Grade	VE / US		Disc. Gr.	Article No.	EURO Stück / piece
M5130-050-B22-07-09		1	●	049	8407368	550,00
M5130-050-B22-07-12		1	●	049	7539432	550,00
M5130-050-B22-08-09		1	●	049	7539391	572,00
M5130-050-B22-09-05		1	●	049	7538944	584,00
M5130-050-B22-12-05		1	●	049	7538945	618,00
M5130-050-T45-03-15		1	●	049	7539486	481,00
M5130-050-T45-05-15		1	●	049	8407354	529,00
M5130-050-T45-06-15		1	●	049	7539487	553,00
M5130-054-B22-03-15		1	●	049	7540041	458,00
M5130-063-B22-04-12		1	●	049	7539433	561,00
M5130-063-B22-04-15		1	●	049	7539492	561,00
M5130-063-B22-05-12		1	●	049	7539434	588,00
M5130-063-B22-06-15		1	●	049	8407358	614,00
M5130-063-B22-07-09		1	●	049	7622340	641,00
M5130-063-B22-07-12		1	●	049	8407343	641,00
M5130-063-B22-07-15		1	●	049	7539493	641,00
M5130-063-B22-08-12		1	●	049	7539435	668,00
M5130-063-B22-11-05		1	●	049	7538946	708,00
M5130-063-B22-11-09		1	●	049	7622341	708,00
M5130-063-B22-14-05		1	●	049	7538947	748,00
M5130-063-B27-04-12		1	●	049	7539436	561,00
M5130-063-B27-04-15		1	●	049	7539494	561,00
M5130-063-B27-05-12		1	●	049	7539437	588,00
M5130-063-B27-06-15		1	●	049	8407359	614,00
M5130-063-B27-07-12		1	●	049	8407369	641,00
M5130-063-B27-07-15		1	●	049	7539495	641,00
M5130-063-B27-08-12		1	●	049	7539438	668,00
M5130-066-B27-04-15		1	●	049	7540042	561,00
M5130-080-B27-05-12		1	●	049	7539439	672,00
M5130-080-B27-05-15		1	●	049	7539496	672,00
M5130-080-B27-06-12		1	●	049	7539440	702,00
M5130-080-B27-07-15		1	●	049	8407367	733,00
M5130-080-B27-08-12		1	●	049	8407371	763,00
M5130-080-B27-08-15		1	●	049	7539497	763,00
M5130-080-B27-09-12		1	●	049	7539441	778,00
M5130-085-B27-05-15		1	●	049	7540043	672,00
M5130-100-B32-05-15		1	●	049	7539498	756,00
M5130-100-B32-08-15		1	●	049	7539499	859,00
M5130-125-B40-07-15		1	●	049	7539500	916,00
M5130-125-B40-10-15		1	●	049	7539501	992,00
M5130-160-B40-08-15		1	●	049	7539502	1.145,00
M5130-160-B40-12-15		1	●	049	7539503	1.236,00
M5130.013-A13-03-05		1	●	049	7538966	301,00
M5130.013-T09-03-05		1	●	049	7539004	301,00
M5130.013-W13-03-05		1	●	049	7538995	301,00
M5130.015-A15-02-09		1	●	049	7539393	305,00
M5130.015-A15-03-05		1	●	049	7538967	321,00
M5130.015-A15-04-05		1	●	049	7538968	337,00
M5130.015-T14-03-05		1	●	049	7539005	321,00
M5130.015-T14-04-05		1	●	049	7539006	337,00
M5130.015-W15-02-09		1	●	049	7539397	305,00
M5130.015-W15-03-05		1	●	049	7538996	321,00
M5130.015-W15-04-05		1	●	049	7538997	337,00
M5130.019-A19-02-09		1	●	049	7539394	324,00
M5130.019-A19-02-12		1	●	049	7539442	324,00
M5130.019-A19-03-09		1	●	049	8407350	341,00
M5130.019-A19-04-05		1	●	049	7538969	358,00
M5130.019-A19-05-05		1	●	049	7538990	375,00
M5130.019-T18-04-05		1	●	049	7539007	358,00
M5130.019-T18-05-05		1	●	049	7539008	375,00
M5130.019-W19-02-12		1	●	049	7539445	324,00
M5130.019-W19-03-09		1	●	049	7539398	341,00
M5130.019-W19-04-05		1	●	049	7538998	358,00
M5130.019-W19-05-05		1	●	049	7538999	375,00
M5130.026-A26-02-15		1	●	049	7539505	343,00
M5130.026-A26-03-09		1	●	049	7539395	361,00
M5130.026-A26-03-12		1	●	049	7539443	361,00
M5130.026-A26-05-05		1	●	049	7538991	397,00
M5130.026-A26-07-05		1	●	049	7538992	433,00
M5130.026-T22-03-12		1	●	049	7539448	361,00

Bezeichnung / Designation	Sorte / Grade	VE / US		Disc. Gr.	Article No.	EURO Stück / piece
M5130.026-T22-05-05		1	●	049	7539009	397,00
M5130.026-T22-07-05		1	●	049	7539010	433,00
M5130.026-W26-02-15		1	●	049	7539507	343,00
M5130.026-W26-03-09		1	●	049	7569221	361,00
M5130.026-W26-03-12		1	●	049	7539446	361,00
M5130.026-W26-04-09		1	●	049	7539399	379,00
M5130.026-W26-05-05		1	●	049	7539000	397,00
M5130.026-W26-07-05		1	●	049	7539001	433,00
M5130.031-A31-03-15		1	●	049	7539506	381,00
M5130.031-A31-04-12		1	●	049	7539444	400,00
M5130.031-T28-03-12		1	●	049	7569283	381,00
M5130.031-T28-04-12		1	●	049	7539449	400,00
M5130.031-T28-06-05		1	●	049	7539011	438,00
M5130.031-T28-08-05		1	●	049	7539012	476,00
M5130.031-W31-03-15		1	●	049	7539508	381,00
M5130.031-W31-04-12		1	●	049	7539447	400,00
M5130.038-B19-05-12		1	●	049	8407355	420,00
M5130.038-B19-06-12		1	●	049	7539452	439,00
M5130.038-T36-03-15		1	●	049	7539510	401,00
M5130.038-T36-04-15		1	●	049	7539511	421,00
M5130.038-T36-06-12		1	●	049	7539450	461,00
M5130.038-T36-07-05		1	●	049	7539013	481,00
M5130.038-T36-10-05		1	●	049	7539014	521,00
M5130.038-W31-04-15		1	●	049	7539509	421,00
M5130.051-B19-03-15		1	●	049	7539515	458,00
M5130.051-B19-04-12		1	●	049	7539453	481,00
M5130.051-B19-05-09		1	●	049	7539410	504,00
M5130.051-B19-05-15		1	●	049	8407363	504,00
M5130.051-B19-06-12		1	●	049	8407365	527,00
M5130.051-B19-06-15		1	●	049	7539516	527,00
M5130.051-B19-07-12		1	●	049	7539454	550,00
M5130.051-B19-08-09		1	●	049	7539411	572,00
M5130.051-B19-09-05		1	●	049	7539018	584,00
M5130.051-B19-12-05		1	●	049	7539019	618,00
M5130.051-T45-06-12		1	●	049	8407362	553,00
M5130.051-T45-06-15		1	●	049	7569197	553,00
M5130.051-T45-07-12		1	●	049	7539451	577,00
M5130.064-B26-04-15		1	●	049	7539517	561,00
M5130.064-B26-05-12		1	●	049	7539455	588,00
M5130.064-B26-06-15		1	●	049	8407364	614,00
M5130.064-B26-07-15		1	●	049	7539518	641,00
M5130.064-B26-08-12		1	●	049	7539456	668,00
M5130.064-B26-11-05		1	●	049	7539020	708,00
M5130.064-B26-14-05		1	●	049	7539021	748,00
M5130.076-B26-05-15		1	●	049	7539519	672,00
M5130.076-B26-06-12		1	●	049	7539457	702,00
M5130.076-B26-07-15		1	●	049	8407370	733,00
M5130.076-B26-08-12		1	●	049	8407372	763,00
M5130.076-B26-08-15		1	●	049	7539520	763,00
M5130.076-B26-09-12		1	●	049	7539458	778,00
M5130.102-B38-05-15		1	●	049	7539521	756,00
M5130.102-B38-08-15		1	●	049	7539522	859,00
M5130.127-B38-07-15		1	●	049	7539523	916,00
M5130.127-B38-10-15		1	●	049	7539524	992,00
M5130.152-B38-08-15		1	●	049	7539525	1.145,00
M5130.152-B38-12-15		1	●	049	7539526	1.236,00
M5137-025-W25-03-05		1	●	049	7951781	373,00
M5137-032-W32-04-05		1	●	049	7951782	392,00
M5137-032-W32-05-05		1	●	049	7951783	411,00
M5137-040-B16-05-05		1	●	049	7951784	412,00
M5137-040-B16-06-05		1	●	049	7951785	430,00
M5137-050-B22-04-08		1	●	049	7828661	471,00
M5137-050-B22-05-08		1	●	049	7828662	494,00
M5137-050-B22-06-05		1	●	049	7951786	516,00
M5137-050-B22-08-05		1	●	049	7951787	561,00
M5137-063-B22-05-08		1	●	049	7828663	576,00
M5137-063-B22-07-05		1	●	049	7951788	629,00
M5137-063-B22-07-08		1	●	049	7828664	629,00
M5137-063-B22-09-05		1	●	049	7951789	668,00
M5137-080-B27-07-08		1	●	049	7828665	718,00

Bezeichnung / Designation	Sorte / Grade	VE / US		Disc. Gr.	Article No.	EURO Stück / piece
M5137-080-B27-09-08		1	●	049	7828666	763,00
M5137-100-B32-08-08		1	●	049	7828667	842,00
M5137-100-B32-11-08		1	●	049	7828668	892,00
M5137.026-W26-03-05		1	●	049	8285651	373,00
M5137.031-W31-04-05		1	●	049	8285652	392,00
M5137.031-W31-05-05		1	●	049	8285653	411,00
M5137.038-B19-05-05		1	●	049	8285654	412,00
M5137.038-B19-06-05		1	●	049	8285655	430,00
M5137.051-B19-04-08		1	●	049	7972864	471,00
M5137.051-B19-05-08		1	●	049	8285627	494,00
M5137.051-B19-06-05		1	●	049	8285656	516,00
M5137.051-B19-08-05		1	●	049	8285657	561,00
M5137.064-B26-05-08		1	●	049	7972865	576,00
M5137.064-B26-07-05		1	●	049	8285658	629,00
M5137.064-B26-07-08		1	●	049	8285628	629,00
M5137.064-B26-09-05		1	●	049	8285659	668,00
M5137.076-B26-07-08		1	●	049	7972866	718,00
M5137.076-B26-09-08		1	●	049	8285629	763,00
M5137.102-B38-08-08		1	●	049	7972867	842,00
M5137.102-B38-11-08		1	●	049	8285650	892,00
M5460-008-A08-02-04-C		1	●	049	8131880	430,00
M5460-008-A08-02-04-C-L		1	●	049	8131881	478,00
M5460-008-A08-02-04-C-XL		1	●	049	8131882	526,00
M5460-008-A10-02-04		1	●	049	8092252	184,00
M5460-008-T09-02-04		1	●	049	8232225	184,00
M5460-008-TC06-02-04		1	●	049	8092824	175,00
M5460-008-W12-02-04		1	●	049	8092868	202,00
M5460-010-A10-02-05-C		1	●	049	8131883	487,00
M5460-010-A10-02-05-C-L		1	●	049	8131884	542,00
M5460-010-A10-02-05-C-XL		1	●	049	8131885	596,00
M5460-010-A12-02-05		1	●	049	8092253	195,00
M5460-010-T09-02-05		1	●	049	8232226	195,00
M5460-010-TC06-02-05		1	●	049	8092825	185,00
M5460-010-W12-02-05		1	●	049	8092869	214,00
M5460-012-A12-02-06		1	●	049	8092254	206,00
M5460-012-A12-02-06-C		1	●	049	8131886	573,00
M5460-012-A12-02-06-C-L		1	●	049	8131887	637,00
M5460-012-A12-02-06-C-XL		1	●	049	8131888	701,00
M5460-012-T09-02-06		1	●	049	8232227	206,00
M5460-012-T14-02-06		1	●	049	8232228	206,00
M5460-012-TC06-02-06		1	●	049	8092826	196,00
M5460-012-W16-02-06		1	●	049	8092940	226,00
M5460-016-A16-02-08		1	●	049	8092255	216,00
M5460-016-A16-02-08-C		1	●	049	8131889	688,00
M5460-016-A16-02-08-C-L		1	●	049	8131890	764,00
M5460-016-A16-02-08-C-XL		1	●	049	8131891	841,00
M5460-016-T14-02-08		1	●	049	8232229	216,00
M5460-016-TC08-02-08		1	●	049	8092827	206,00
M5460-016-W20-02-08		1	●	049	8092941	238,00
M5460-020-A20-02-10		1	●	049	8092256	227,00
M5460-020-A20-02-10-C		1	●	049	8131892	860,00
M5460-020-A20-02-10-C-L		1	●	049	8131893	1.051,00
M5460-020-T18-02-10		1	●	049	8232260	227,00
M5460-020-TC10-02-10		1	●	049	8092828	216,00
M5460-020-W25-02-10		1	●	049	8092942	250,00
M5460-025-A25-02-12		1	●	049	8092257	260,00
M5460-025-A25-02-12-C		1	●	049	8131894	1.147,00
M5460-025-A25-02-12-C-L		1	●	049	8131895	1.402,00
M5460-025-T22-02-12		1	●	049	8232261	260,00
M5460-025-TC12-02-12		1	●	049	8092829	247,00
M5460-025-W32-02-12		1	●	049	8092943	286,00
M5460-030-A32-02-15		1	●	049	8092258	325,00
M5460-030-T28-02-15		1	●	049	8232262	325,00
M5460-030-TC16-02-15		1	●	049	8092900	309,00
M5460-032-A32-02-16		1	●	049	8092259	389,00
M5460-032-T28-02-16		1	●	049	8232263	389,00
M5460-032-TC16-02-16		1	●	049	8092901	371,00
M5460.009-A13-02-05		1	●	049	8092809	195,00
M5460.009-W13-02-05		1	●	049	8092801	214,00
M5460.013-A13-02-06		1	●	049	8092850	206,00

Bezeichnung / Designation	Sorte / Grade	VE / US		Disc. Gr.	Article No.	EURO Stück / piece
M5460.013-W15-02-06		1	●	049	8092802	226,00
M5460.015-A15-02-08		1	●	049	8092851	216,00
M5460.015-W19-02-08		1	●	049	8092803	238,00
M5460.019-A19-02-10		1	●	049	8092852	227,00
M5460.019-W26-02-10		1	●	049	8092804	250,00
M5460.026-A26-02-13		1	●	049	8092853	260,00
M5460.026-W31-02-13		1	●	049	8092805	286,00
M5468-010-T09-02-02.5		1	●	049	7988568	245,00
M5468-010-TC06-02-02.5		1	●	049	7988567	277,00
M5468-010-W10-02-02.5		1	●	049	7988569	245,00
M5468-012-T09-03-02.5		1	●	049	7988671	279,00
M5468-012-TC06-03-02.5		1	●	049	7988670	265,00
M5468-012-W12-03-02.5		1	●	049	7988672	279,00
M5468-015-T14-03-03.5		1	●	049	7988694	297,00
M5468-015-TC08-03-03.5		1	●	049	7988693	283,00
M5468-015-W16-03-03.5		1	●	049	7988695	297,00
M5468-016-T14-02-04		1	●	049	7988704	280,00
M5468-016-T14-04-02.5		1	●	049	7988674	314,00
M5468-016-TC08-02-04		1	●	049	7988703	266,00
M5468-016-TC08-04-02.5		1	●	049	7988673	300,00
M5468-016-W16-02-04		1	●	049	7988702	280,00
M5468-016-W16-02-04-XL		1	●	049	8232094	349,00
M5468-020-T18-02-05		1	●	049	7885091	297,00
M5468-020-T18-04-03.5		1	●	049	7988697	334,00
M5468-020-T18-05-02.5		1	●	049	7988676	353,00
M5468-020-TC10-02-05		1	●	049	7885090	283,00
M5468-020-TC10-04-03.5		1	●	049	7988696	318,00
M5468-020-TC10-05-02.5		1	●	049	7988675	336,00
M5468-020-W20-02-05		1	●	049	7885092	316,00
M5468-020-W20-02-05-XL		1	●	049	8232095	370,00
M5468-024-T22-02-06		1	●	049	7885109	314,00
M5468-024-TC12-02-06		1	●	049	7885108	299,00
M5468-024-W25-02-06		1	●	049	7885110	314,00
M5468-024-W25-02-06-XL		1	●	049	8232096	392,00
M5468-025-T22-03-04		1	●	049	7988706	334,00
M5468-025-T22-03-05		1	●	049	7885094	334,00
M5468-025-T22-05-03.5		1	●	049	7988699	373,00
M5468-025-TC12-03-04		1	●	049	7988705	318,00
M5468-025-TC12-03-05		1	●	049	7885093	318,00
M5468-025-TC12-05-03.5		1	●	049	7988698	356,00
M5468-025-W25-03-04		1	●	049	7988707	334,00
M5468-030-T28-04-05		1	●	049	7885096	373,00
M5468-030-T28-06-03.5		1	●	049	7988701	415,00
M5468-030-TC16-04-05		1	●	049	7885095	356,00
M5468-030-TC16-06-03.5		1	●	049	7988700	395,00
M5468-032-T28-02-08		1	●	049	7885132	332,00
M5468-032-T28-03-06		1	●	049	7885112	353,00
M5468-032-T28-04-05		1	●	049	7885098	373,00
M5468-032-T28-05-04		1	●	049	7988709	394,00
M5468-032-TC16-02-08		1	●	049	7885131	316,00
M5468-032-TC16-03-06		1	●	049	7885111	336,00
M5468-032-TC16-04-05		1	●	049	7885097	356,00
M5468-032-TC16-05-04		1	●	049	7988708	375,00
M5468-032-W32-02-08		1	●	049	7885133	332,00
M5468-032-W32-02-08-XL		1	●	049	8232097	414,00
M5468-032-W32-04-05		1	●	049	7885099	373,00
M5468-035-T28-05-05		1	●	049	7885101	415,00
M5468-035-TC16-05-05		1	●	049	7885100	395,00
M5468-040-B16-04-06		1	●	049	7885113	374,00
M5468-040-B16-05-05		1	●	049	7885102	395,00
M5468-040-B16-05-06		1	●	049	7885114	395,00
M5468-040-T36-02-10		1	●	049	7988841	349,00
M5468-040-T36-05-05		1	●	049	7885104	415,00
M5468-040-T36-05-06		1	●	049	7885116	415,00
M5468-040-TC16-02-10		1	●	049	7988840	333,00
M5468-040-TC16-05-05		1	●	049	7885103	395,00
M5468-040-TC16-05-06		1	●	049	7885115	395,00
M5468-040-W40-02-10		1	●	049	7988842	349,00
M5468-040-W40-04-06-XL		1	●	049	8232243	482,00
M5468-042-B16-05-06		1	●	049	7885117	395,00

Bezeichnung / Designation	Sorte / Grade	VE / US		Disc. Gr.	Article No.	EURO Stück / piece
M5468-042-T36-05-06		1	●	049	7885119	415,00
M5468-042-TC16-05-06		1	●	049	7885118	395,00
M5468-050-B22-05-06		1	●	049	7885120	474,00
M5468-050-B22-06-05		1	●	049	7885105	499,00
M5468-050-B22-06-06		1	●	049	7885121	499,00
M5468-052-B22-04-08		1	●	049	7885135	449,00
M5468-052-B22-05-06		1	●	049	7885122	474,00
M5468-052-B22-05-08		1	●	049	7885136	474,00
M5468-052-B22-06-05		1	●	049	7885106	499,00
M5468-052-B22-06-06		1	●	049	7885123	499,00
M5468-063-B22-04-10		1	●	049	7988843	524,00
M5468-063-B22-05-08		1	●	049	7885137	553,00
M5468-063-B22-05-10		1	●	049	8232244	641,00
M5468-063-B22-06-06		1	●	049	7885124	582,00
M5468-063-B22-06-08		1	●	049	7885138	582,00
M5468-063-B22-07-06		1	●	049	7885125	611,00
M5468-066-B27-05-08		1	●	049	7885139	553,00
M5468-066-B27-06-06		1	●	049	7885126	582,00
M5468-066-B27-06-08		1	●	049	7885140	582,00
M5468-066-B27-07-06		1	●	049	7885127	611,00
M5468-080-B27-05-10		1	●	049	7988844	632,00
M5468-080-B27-06-08		1	●	049	7885141	666,00
M5468-080-B27-06-10		1	●	049	8232248	765,00
M5468-080-B27-07-06		1	●	049	7885128	699,00
M5468-080-B27-07-08		1	●	049	7885142	699,00
M5468-080-B27-08-06		1	●	049	7885129	732,00
M5468-100-B32-06-10		1	●	049	7988845	749,00
M5468-100-B32-07-08		1	●	049	7885143	786,00
M5468-100-B32-07-10		1	●	049	8232250	898,00
M5468-100-B32-08-06		1	●	049	7885130	824,00
M5468-125-B40-07-10		1	●	049	7988846	873,00
M5468-125-B40-08-08		1	●	049	7885144	915,00
M5468-125-B40-08-10		1	●	049	8232251	1.040,00
M5468-160-B40-08-10		1	●	049	8232099	1.248,00
M5468-160-B40-10-10		1	●	049	8232253	1.298,00
M5468.026-W26-03-04		1	●	049	8232242	393,00
M5468.026-W26-03-05		1	●	049	7988848	334,00
M5468.031-W31-04-05		1	●	049	7988849	373,00
M5468.038-W31-04-06		1	●	049	7988862	393,00
M5468.038-W31-05-05		1	●	049	7988860	415,00
M5468.051-B19-06-05		1	●	049	7988861	499,00
M5468.051-B19-06-06		1	●	049	7988863	499,00
M5468.064-B26-06-08		1	●	049	7988867	582,00
M5468.064-B26-07-06		1	●	049	7988864	611,00
M5468.076-B26-07-08		1	●	049	7988868	699,00
M5468.076-B26-08-06		1	●	049	7988865	732,00
M5468.102-B38-06-10		1	●	049	8232240	861,00
M5468.102-B38-07-08		1	●	049	7988869	786,00
M5468.102-B38-08-06		1	●	049	7988866	824,00
M5468.127-B38-08-08		1	●	049	7988880	915,00
MA290-03.0A6S-WE10DB	WE10DB	1	○	M20	8416709	148,00
MA290-03.0A6S-WJ30DD	WJ30DD	1	○	M20	8416710	97,60
MA290-03.0A6SK-WE10DB	WE10DB	1	○	M20	8416707	148,00
MA290-03.0A6SK-WJ30DD	WJ30DD	1	○	M20	8416708	97,60
MA290-05.0A8D-WE10DB	WE10DB	1	○	M20	8416713	161,00
MA290-05.0A8D-WJ30DD	WJ30DD	1	○	M20	8416714	106,00
MA290-05.0A8DK-WE10DB	WE10DB	1	○	M20	8416711	161,00
MA290-05.0A8DK-WJ30DD	WJ30DD	1	○	M20	8416712	106,00
MA290-06.0A10D-WE10DB	WE10DB	1	○	M20	8416717	218,00
MA290-06.0A10D-WJ30DD	WJ30DD	1	○	M20	8416718	144,00
MA290-06.0A10DJ-WE10DB	WE10DB	1	○	M20	8416715	218,00
MA290-06.0A10DJ-WJ30DD	WJ30DD	1	○	M20	8416716	144,00
MA290-08.0A10S-WE10DB	WE10DB	1	○	M20	8416719	305,00
MA290-08.0A10S-WJ30DD	WJ30DD	1	○	M20	8416720	202,00
MA290-10.0A12D-WE10DB	WE10DB	1	○	M20	8416723	401,00
MA290-10.0A12D-WJ30DD	WJ30DD	1	○	M20	8416724	265,00
MA290-10.0A12DJ-WE10DB	WE10DB	1	○	M20	8416721	401,00
MA290-10.0A12DJ-WJ30DD	WJ30DD	1	○	M20	8416722	265,00
MA290-12.0A14D-WE10DB	WE10DB	1	○	M20	8416725	573,00
MA290-12.0A14D-WJ30DD	WJ30DD	1	○	M20	8416726	379,00

Bezeichnung / Designation	Sorte / Grade	VE / US		Disc. Gr.	Article No.	EURO Stück / piece
MA290-12.0A14LK-WE10DB	WE10DB	1	○	M20	8416727	694,00
MA290-12.0A14LK-WJ30DD	WJ30DD	1	○	M20	8416728	459,00
MA290.3.18A6S-WE10DB	WE10DB	1	●	M20	8416689	136,00
MA290.3.18A6S-WJ30DD	WJ30DD	1	○	M20	8416690	89,80
MA290.3.18A6SK-WE10DB	WE10DB	1	●	M20	8416687	136,00
MA290.4.76A8D-WE10DB	WE10DB	1	●	M20	8416693	148,00
MA290.4.76A8D-WJ30DD	WJ30DD	1	○	M20	8416694	97,90
MA290.4.76A8DK-WE10DB	WE10DB	1	●	M20	8416691	148,00
MA290.4.76A8DK-WJ30DD	WJ30DD	1	○	M20	8416692	97,90
MA290.6.35A10D-WE10DB	WE10DB	1	●	M20	8416697	200,00
MA290.6.35A10D-WJ30DD	WJ30DD	1	○	M20	8416698	133,00
MA290.6.35A10DJ-WE10DB	WE10DB	1	●	M20	8416695	200,00
MA290.6.35A10LK-WE10DB	WE10DB	1	●	M20	8416699	231,00
MA290.7.93A10DJ-WE10DB	WE10DB	1	●	M20	8416701	241,00
MA290.7.93A10DJ-WJ30DD	WJ30DD	1	○	M20	8416702	159,00
MA290.9.53A12DJ-WE10DB	WE10DB	1	●	M20	8416703	345,00
MA290.9.53A12DJ-WJ30DD	WJ30DD	1	○	M20	8416704	228,00
MA290.9.53A12S-WE10DB	WE10DB	1	●	M20	8416705	345,00
MA290.9.53A12S-WJ30DD	WJ30DD	1	○	M20	8416706	228,00
MA290.12.7A14DK-WE10DB	WE10DB	1	●	M20	8416683	638,00
MA290.12.7A14DK-WJ30DD	WJ30DD	1	○	M20	8416684	422,00
MA290.12.7A14S-WE10DB	WE10DB	1	●	M20	8416685	527,00
MA290.12.7A14S-WJ30DD	WJ30DD	1	○	M20	8416686	349,00
MB265-16.0A3X200A-WJ30CA	WJ30CA	1	●	M30	6585860[1]	346,00
MB265-16.0A3X200B-WJ30CA	WJ30CA	1	●	M30	6585862[1]	314,00
MB265-20.0A3X200A-WJ30CA	WJ30CA	1	●	M30	6585865[1]	487,00
MB265-20.0A3X200B-WJ30CA	WJ30CA	1	●	M30	6585867[1]	448,00
MB265-25.0A3X200C-WJ30CA	WJ30CA	1	●	M30	6585872[1]	495,00
MB265-25.0A3X400B-WJ30CA	WJ30CA	1	●	M30	6585875[1]	540,00
MB266.9.53A3X038B-WJ30UU	WJ30UU	1	●	M30	7089343[2]	161,00
MB266.15.9A3X038C-WJ30UU	WJ30UU	1	●	M30	7089361[2]	247,00
MB266.15.9A3X076C-WJ30UU	WJ30UU	1	●	M30	7089362[2]	247,00
MB266.19.1A3X038C-WJ30UU	WJ30UU	1	●	M30	7089367[2]	352,00
MC025-01.0A2B010-WJ30TF	WJ30TF	1	●	M20	7745558	79,90
MC025-02.0A2B020-WJ30TF	WJ30TF	1	●	M20	7745559	68,90
MC025-03.0A2B030-WJ30TF	WJ30TF	1	●	M20	7879658	68,90
MC025-04.0A4B050-WJ30TF	WJ30TF	1	●	M20	7745621	76,60
MC025-05.0A4B050-WJ30TF	WJ30TF	1	●	M20	7745622	76,60
MC025-06.0A4B050-WJ30TF	WJ30TF	1	●	M20	7745623	76,60
MC025-08.0A4B100-WJ30TF	WJ30TF	1	●	M20	7745624	107,00
MC025-10.0A4B150-WJ30TF	WJ30TF	1	●	M20	7745625	138,00
MC025-10.0E4P150-WJ30TF	WJ30TF	1	●	MS5	7745682	61,80
MC025-12.0A4B150-WJ30TF	WJ30TF	1	●	M20	7745626	184,00
MC025-12.0E4P150-WJ30TF	WJ30TF	1	●	MS5	7745683	77,20
MC025-16.0A4B200-WJ30TF	WJ30TF	1	●	M20	7745627	276,00
MC025-16.0E4P200-WJ30TF	WJ30TF	1	●	MS5	7745684	120,00
MC025-20.0E4P200-WJ30TF	WJ30TF	1	●	MS5	7745685	143,00
MC025-25.0E4P300-WJ30TF	WJ30TF	1	●	MS5	7879659	178,00
MC025.3.18A4D051-WJ30TF	WJ30TF	1	●	M20	7745628	72,70
MC025.4.76A4D051-WJ30TF	WJ30TF	1	●	M20	7745629	72,70
MC025.6.35A4D051-WJ30TF	WJ30TF	1	●	M20	7745630	72,70
MC025.7.94A4D102-WJ30TF	WJ30TF	1	●	M20	7745631	102,00
MC025.9.53A4D152-WJ30TF	WJ30TF	1	●	M20	7745632	131,00
MC025.9.53E4P152-WJ30TF	WJ30TF	1	●	MS5	7745687	61,80
MC025.12.7A4D152-WJ30TF	WJ30TF	1	●	M20	7745633	175,00
MC025.12.7E4P152-WJ30TF	WJ30TF	1	●	MS5	7745688	77,20
MC025.15.9A4D203-WJ30TF	WJ30TF	1	●	M20	7745634	263,00
MC025.15.9E4P203-WJ30TF	WJ30TF	1	●	MS5	7745689	120,00
MC025.19.1E4P203-WJ30TF	WJ30TF	1	●	MS5	7745690	143,00
MC025.25.4E4P318-WJ30TF	WJ30TF	1	●	MS5	7879710	178,00
MC075-08.0A4P100C-WIS10	WIS10	1	●	MS7	7393546	204,00
MC075-10.0A4P150C-WIS10	WIS10	1	●	MS7	7393547	263,00
MC075-12.0A4P150C-WIS10	WIS10	1	●	MS7	7393548	350,00
MC075-16.0E4P200-WIS10	WIS10	1	●	MS5	7393929	232,00
MC075-20.0E4P200-WIS10	WIS10	1	●	MS5	7393960	277,00
MC075-25.0E4P300-WIS10	WIS10	1	●	MS5	7393961	344,00
MC089-04.0A4B050-WB10TG	WB10TG	1	●	M20	7254497	85,10
MC089-05.0A4B050-WB10TG	WB10TG	1	●	M20	7254498	85,10
MC089-06.0A4B050-WB10TG	WB10TG	1	●	M20	7254499	85,10
MC089-08.0A4B100-WB10TG	WB10TG	1	●	M20	7254520	119,00

Bezeichnung / Designation	Sorte / Grade	VE / US		Disc. Gr.	Article No.	EURO Stück / piece
MC089-10.0A4B150-WB10TG	WB10TG	1	●	M20	7254521	153,00
MC089-12.0A4B150-WB10TG	WB10TG	1	●	M20	7254522	204,00
MC089-16.0A4B200-WB10TG	WB10TG	1	●	M20	7254523	307,00
MC111-02.0A4A-WJ30TF	WJ30TF	1	■	M20	6579650[3]	52,50
MC111-02.0W4A-WJ30TF	WJ30TF	1	■	M20	6579794[3]	52,50
MC111-03.0A4A-WJ30TF	WJ30TF	1	■	M20	6579652[3]	52,50
MC111-03.0W4A-WJ30TF	WJ30TF	1	■	M20	6579796[3]	52,50
MC111-04.0A4A-WJ30TF	WJ30TF	1	■	M20	6579653[3]	52,50
MC111-04.0W4A-WJ30TF	WJ30TF	1	■	M20	6579797[3]	52,50
MC111-05.0A4A-WJ30TF	WJ30TF	1	■	M20	6579654[3]	52,50
MC111-05.0W4A-WJ30TF	WJ30TF	1	■	M20	6579798[3]	52,50
MC111-06.0A4A-WJ30TF	WJ30TF	1	■	M20	6579655[3]	52,50
MC111-06.0W4A-WJ30TF	WJ30TF	1	■	M20	6579799[3]	52,50
MC111-07.0A4A-WJ30TF	WJ30TF	1	■	M20	6579656[3]	63,00
MC111-07.0W4A-WJ30TF	WJ30TF	1	●	M20	6579800	63,00
MC111-08.0A4A-WJ30TF	WJ30TF	1	■	M20	6579657[3]	73,50
MC111-08.0W4A-WJ30TF	WJ30TF	1	■	M20	6579801[3]	73,50
MC111-10.0A4A-WJ30TF	WJ30TF	1	■	M20	6579605[3]	94,40
MC111-10.0W4A-WJ30TF	WJ30TF	1	■	M20	6579789[3]	94,40
MC111-12.0A4A-WJ30TF	WJ30TF	1	■	M20	6579606[3]	126,00
MC111-12.0W4A-WJ30TF	WJ30TF	1	■	M20	6579790[3]	126,00
MC111-14.0A4A-WJ30TF	WJ30TF	1	■	M20	6579607[3]	168,00
MC111-14.0W4A-WJ30TF	WJ30TF	1	■	M20	6579791[3]	168,00
MC111-16.0A4A-WJ30TF	WJ30TF	1	■	M20	6579608[3]	199,00
MC111-16.0W4A-WJ30TF	WJ30TF	1	■	M20	6579792[3]	199,00
MC111-18.0A4A-WJ30TF	WJ30TF	1	■	M20	6579609[3]	243,00
MC111-20.0A4A-WJ30TF	WJ30TF	1	■	M20	6579651[3]	304,00
MC111-20.0W4A-WJ30TF	WJ30TF	1	■	M20	6579795[3]	304,00
MC111.2.38A4D-WJ30TF	WJ30TF	1	●	M20	7092370	52,50
MC111.3.18A4D-WJ30TF	WJ30TF	1	●	M20	7092371	52,50
MC111.4.76A4D-WJ30TF	WJ30TF	1	●	M20	7092372	52,50
MC111.6.35A4D-WJ30TF	WJ30TF	1	●	M20	7092373	52,50
MC111.7.94A4D-WJ30TF	WJ30TF	1	●	M20	7092374	73,40
MC111.9.53A4D-WJ30TF	WJ30TF	1	●	M20	7092375	94,40
MC111.12.7A4D-WJ30TF	WJ30TF	1	●	M20	7092376	126,00
MC111.15.9A4D-WJ30TF	WJ30TF	1	●	M20	7092377	199,00
MC111.19.1A4D-WJ30TF	WJ30TF	1	●	M20	7092378	304,00
MC112-04.0A4L050-WJ30TF	WJ30TF	1	●	M20	6579877	69,90
MC112-06.0A4L100-WJ30TF	WJ30TF	1	●	M20	6579879	69,90
MC112-06.3A4X-WJ30TF	WJ30TF	1	●	M20	6579787	77,30
MC112-08.0A4L100-WJ30TF	WJ30TF	1	●	M20	6579880	97,80
MC112-08.3A4X-WJ30TF	WJ30TF	1	●	M20	6579788	108,00
MC112-10.3A4X-WJ30TF	WJ30TF	1	●	M20	6579783	139,00
MC112-12.0A4L150-WJ30TF	WJ30TF	1	●	M20	6579875	168,00
MC112-12.5A4X-WJ30TF	WJ30TF	1	●	M20	6579784	186,00
MC112-16.0A4L200-WJ30TF	WJ30TF	1	●	M20	6579876	265,00
MC122-04.0W4XK-WJ30TF	WJ30TF	1	■	M20	6579847[3]	77,30
MC122-05.0W4XK-WJ30TF	WJ30TF	1	■	M20	6579848[3]	77,30
MC122-06.0A4L-WJ30TF	WJ30TF	1	■	M20	6579688[3]	63,50
MC122-06.0A4XK-WJ30TF	WJ30TF	1	■	M20	6579698[3]	77,30
MC122-06.0W4L-WJ30TF	WJ30TF	1	■	M20	6579835[3]	63,50
MC122-06.0W4XK-WJ30TF	WJ30TF	1	■	M20	6579849[3]	77,30
MC122-08.0A4L-WJ30TF	WJ30TF	1	■	M20	6579689[3]	88,90
MC122-08.0A4XK-WJ30TF	WJ30TF	1	■	M20	6579699[3]	108,00
MC122-08.0W4L-WJ30TF	WJ30TF	1	■	M20	6579836[3]	88,90
MC122-08.0W4XK-WJ30TF	WJ30TF	1	■	M20	6579850[3]	108,00
MC122-10.0A4L-WJ30TF	WJ30TF	1	■	M20	6579683[3]	114,00
MC122-10.0A4XK-WJ30TF	WJ30TF	1	■	M20	6579690[3]	139,00
MC122-10.0W4L-WJ30TF	WJ30TF	1	■	M20	6579830[3]	114,00
MC122-10.0W4XK-WJ30TF	WJ30TF	1	■	M20	6579837[3]	139,00
MC122-12.0A4L-WJ30TF	WJ30TF	1	■	M20	6579684[3]	152,00
MC122-12.0A4XK-WJ30TF	WJ30TF	1	■	M20	6579691[3]	186,00
MC122-12.0W4L-WJ30TF	WJ30TF	1	■	M20	6579831[3]	152,00
MC122-12.0W4XK-WJ30TF	WJ30TF	1	■	M20	6579838[3]	186,00
MC122-14.0A4L-WJ30TF	WJ30TF	1	■	M20	6579685[3]	203,00
MC122-14.0W4L-WJ30TF	WJ30TF	1	■	M20	6579832[3]	203,00
MC122-14.0W4XK-WJ30TF	WJ30TF	1	■	M20	6579839[3]	247,00
MC122-16.0A5L-WJ30TF	WJ30TF	1	■	M20	6579686[3]	253,00
MC122-16.0A5XK-WJ30TF	WJ30TF	1	■	M20	6579692[3]	308,00
MC122-16.0A5XL-WJ30TF	WJ30TF	1	■	M20	6579693[3]	364,00

Bezeichnung / Designation	Sorte / Grade	VE / US		Disc. Gr.	Article No.	EURO Stück / piece
MC122-16.0W5L-WJ30TF	WJ30TF	1	■	M20	6579833*	253,00
MC122-16.0W5XK-WJ30TF	WJ30TF	1	■	M20	6579840*	308,00
MC122-16.0W5XL-WJ30TF	WJ30TF	1	■	M20	6579841*	364,00
MC122-18.0A5B-WJ30TF	WJ30TF	1	●	M20	6959686	290,00
MC122-18.0W5XK-WJ30TF	WJ30TF	1	■	M20	6579842*	375,00
MC122-20.0A5B-WJ30TF	WJ30TF	1	●	M20	6959687	336,00
MC122-20.0A5L-WJ30TF	WJ30TF	1	■	M20	6579687*	387,00
MC122-20.0A6XK-WJ30TF	WJ30TF	1	■	M20	6579695*	493,00
MC122-20.0A6XL-WJ30TF	WJ30TF	1	■	M20	6579694*	581,00
MC122-20.0W5B-WJ30TF	WJ30TF	1	●	M20	6579823*	336,00
MC122-20.0W5L-WJ30TF	WJ30TF	1	■	M20	6579834*	387,00
MC122-20.0W6XK-WJ30TF	WJ30TF	1	■	M20	6579844*	493,00
MC122-20.0W6XL-WJ30TF	WJ30TF	1	■	M20	6579843*	581,00
MC122-25.0A5B-WJ30TF	WJ30TF	1	●	M20	6579824*	418,00
MC122-25.0A8XK-WJ30TF	WJ30TF	1	●	M20	6579697*	631,00
MC122-25.0A8XL-WJ30TF	WJ30TF	1	●	M20	6579696*	743,00
MC122-25.0W8XK-WJ30TF	WJ30TF	1	■	M20	6579846*	631,00
MC122-25.0W8XL-WJ30TF	WJ30TF	1	■	M20	6579845*	743,00
MC128-02.0A4B-WJ30TF	WJ30TF	1	●	M20	7872770	55,20
MC128-03.0A4B-WJ30TF	WJ30TF	1	●	M20	7872771	55,20
MC128-04.0A4B-WJ30TF	WJ30TF	1	●	M20	7872772	55,20
MC128-05.0A5B-WJ30TF	WJ30TF	1	●	M20	7872773	58,00
MC128-06.0A6B-WJ30TF	WJ30TF	1	●	M20	7872774	60,80
MC128-06.0A6B050-WJ30TF	WJ30TF	1	●	M20	7872781	66,80
MC128-08.0A6B-WJ30TF	WJ30TF	1	●	M20	7872775	85,10
MC128-08.0A6B050-WJ30TF	WJ30TF	1	●	M20	7872782	93,60
MC128-08.0A6B100-WJ30TF	WJ30TF	1	●	M20	7872783	93,60
MC128-10.0A6B-WJ30TF	WJ30TF	1	●	M20	7872776	109,00
MC128-10.0A6B050-WJ30TF	WJ30TF	1	●	M20	7872784	120,00
MC128-10.0A6B100-WJ30TF	WJ30TF	1	●	M20	7872785	120,00
MC128-10.0A6B200-WJ30TF	WJ30TF	1	●	M20	7872786	120,00
MC128-10.0E6P-WJ30TF	WJ30TF	1	●	MS5	7872823	68,60
MC128-10.0E6P050-WJ30TF	WJ30TF	1	●	MS5	7872828	75,50
MC128-10.0E6P100-WJ30TF	WJ30TF	1	●	MS5	7872829	75,50
MC128-12.0A6B-WJ30TF	WJ30TF	1	●	M20	7872777	146,00
MC128-12.0A6B050-WJ30TF	WJ30TF	1	●	M20	7872787	160,00
MC128-12.0A6B100-WJ30TF	WJ30TF	1	●	M20	7872788	160,00
MC128-12.0A6B200-WJ30TF	WJ30TF	1	●	M20	7872789	160,00
MC128-12.0A6B300-WJ30TF	WJ30TF	1	●	M20	7872790	160,00
MC128-12.0E6P-WJ30TF	WJ30TF	1	●	MS5	7872824	85,80
MC128-12.0E6P050-WJ30TF	WJ30TF	1	●	MS5	7872870	94,40
MC128-12.0E6P100-WJ30TF	WJ30TF	1	●	MS5	7872871	94,40
MC128-12.0E6P150-WJ30TF	WJ30TF	1	●	MS5	7872872	94,40
MC128-12.0E6P200-WJ30TF	WJ30TF	1	●	MS5	7872873	94,40
MC128-16.0A6B-WJ30TF	WJ30TF	1	●	M20	7872778	231,00
MC128-16.0A6B050-WJ30TF	WJ30TF	1	●	M20	7872791	254,00
MC128-16.0A6B100-WJ30TF	WJ30TF	1	●	M20	7872792	254,00
MC128-16.0A6B200-WJ30TF	WJ30TF	1	●	M20	7872793	254,00
MC128-16.0A6B300-WJ30TF	WJ30TF	1	●	M20	7872794	254,00
MC128-16.0E6P-WJ30TF	WJ30TF	1	●	MS5	7872825	133,00
MC128-16.0E6P050-WJ30TF	WJ30TF	1	●	MS5	7872874	146,00
MC128-16.0E6P100-WJ30TF	WJ30TF	1	●	MS5	7872875	146,00
MC128-16.0E6P150-WJ30TF	WJ30TF	1	●	MS5	7872876	146,00
MC128-16.0E6P200-WJ30TF	WJ30TF	1	●	MS5	7872877	146,00
MC128-20.0A8B-WJ30TF	WJ30TF	1	●	M20	7872779	384,00
MC128-20.0A8B100-WJ30TF	WJ30TF	1	●	M20	7872795	423,00
MC128-20.0A8B200-WJ30TF	WJ30TF	1	●	M20	7872796	423,00
MC128-20.0A8B300-WJ30TF	WJ30TF	1	●	M20	7872797	423,00
MC128-20.0A8B400-WJ30TF	WJ30TF	1	●	M20	7872798	423,00
MC128-20.0E8P-WJ30TF	WJ30TF	1	●	MS5	7872826	173,00
MC128-20.0E8P100-WJ30TF	WJ30TF	1	●	MS5	7872878	190,00
MC128-20.0E8P200-WJ30TF	WJ30TF	1	●	MS5	7872879	190,00
MC128-20.0E8P400-WJ30TF	WJ30TF	1	●	MS5	7872880	190,00
MC128-25.0A8B-WJ30TF	WJ30TF	1	●	M20	7872780	477,00
MC128-25.0E8P-WJ30TF	WJ30TF	1	●	MS5	7872827	215,00
MC128-25.0E8P100-WJ30TF	WJ30TF	1	●	MS5	7872881	237,00
MC128-25.0E8P200-WJ30TF	WJ30TF	1	●	MS5	7872882	237,00
MC128-25.0E8P400-WJ30TF	WJ30TF	1	●	MS5	7872883	237,00
MC128.6.35A6C-WJ30TF	WJ30TF	1	●	M20	7991093	54,80
MC128.6.35A6D038-WJ30TF	WJ30TF	1	●	M20	7872809	63,50

Bezeichnung / Designation	Sorte / Grade	VE / US		Disc. Gr.	Article No.	EURO Stück / piece
MC128.6.35A6D076-WJ30TF	WJ30TF	1	●	M20	7872810	63,50
MC128.6.35A6L-WJ30TF	WJ30TF	1	●	M20	7991094	66,40
MC128.9.53A6C-WJ30TF	WJ30TF	1	●	M20	7991095	98,70
MC128.9.53A6D-WJ30TF	WJ30TF	1	●	M20	7991096	104,00
MC128.9.53A6D038-WJ30TF	WJ30TF	1	●	M20	7872811	114,00
MC128.9.53A6D076-WJ30TF	WJ30TF	1	●	M20	7872812	114,00
MC128.12.7A6D-WJ30TF	WJ30TF	1	●	M20	7991098	139,00
MC128.12.7A6DI-WJ30TF	WJ30TF	1	●	M20	7991097	139,00
MC128.12.7A6D076-WJ30TF	WJ30TF	1	●	M20	7872813	152,00
MC128.12.7A6D152-WJ30TF	WJ30TF	1	●	M20	7872814	152,00
MC128.12.7A6D228-WJ30TF	WJ30TF	1	●	M20	7872815	152,00
MC128.12.7A6D318-WJ30TF	WJ30TF	1	●	M20	7872816	152,00
MC128.15.9A6D-WJ30TF	WJ30TF	1	●	M20	7872806	219,00
MC128.15.9A6DI-WJ30TF	WJ30TF	1	●	M20	7872805	219,00
MC128.15.9A6D076-WJ30TF	WJ30TF	1	●	M20	7872817	241,00
MC128.15.9A6D152-WJ30TF	WJ30TF	1	●	M20	7872818	241,00
MC128.19.1A8D-WJ30TF	WJ30TF	1	●	M20	7872807	365,00
MC128.19.1A8D076-WJ30TF	WJ30TF	1	●	M20	7872819	402,00
MC128.19.1A8D318-WJ30TF	WJ30TF	1	●	M20	7872820	402,00
MC128.19.1A8D635-WJ30TF	WJ30TF	1	●	M20	7872821	402,00
MC128.19.1A8L-WJ30TF	WJ30TF	1	●	M20	7872808	420,00
MC129-06.0A6B-WJ30TF	WJ30TF	1	●	M20	6959688	60,70
MC129-08.0A6B-WJ30TF	WJ30TF	1	●	M20	6959689	85,10
MC129-10.0A6B-WJ30TF	WJ30TF	1	●	M20	6959690	109,00
MC129-12.0A6B-WJ30TF	WJ30TF	1	●	M20	6959691	146,00
MC129-14.0A6B-WJ30TF	WJ30TF	1	●	M20	6959692	194,00
MC129-16.0A6B-WJ30TF	WJ30TF	1	●	M20	6959693	231,00
MC129-20.0A6B-WJ30TF	WJ30TF	1	●	M20	6959694	352,00
MC166-12.0A3L100D-WJ30UU	WJ30UU	1	●	M20	8033528	184,00
MC166-12.0A3L200D-WJ30UU	WJ30UU	1	●	M20	8033529	184,00
MC166-12.0A3L300D-WJ30UU	WJ30UU	1	●	M20	8033540	184,00
MC166-12.0A3L400D-WJ30UU	WJ30UU	1	●	M20	8033541	184,00
MC166-12.0A3X100L-WJ30UU	WJ30UU	1	●	M20	8033524	198,00
MC166-12.0A3X200L-WJ30UU	WJ30UU	1	●	M20	8033525	198,00
MC166-12.0A3X300L-WJ30UU	WJ30UU	1	●	M20	8033526	198,00
MC166-12.0A3X400L-WJ30UU	WJ30UU	1	●	M20	8033527	198,00
MC166-15.0A3L300D-WJ30UU	WJ30UU	1	●	M20	8033544	277,00
MC166-15.0A3L400D-WJ30UU	WJ30UU	1	●	M20	8033545	277,00
MC166-15.0A3X300L-WJ30UU	WJ30UU	1	●	M20	8033542	296,00
MC166-15.0A3X400L-WJ30UU	WJ30UU	1	●	M20	8033543	296,00
MC166-16.0A3L100D-WJ30UU	WJ30UU	1	●	M20	8033551	292,00
MC166-16.0A3L200D-WJ30UU	WJ30UU	1	●	M20	8033552	292,00
MC166-16.0A3L300D-WJ30UU	WJ30UU	1	●	M20	8033553	292,00
MC166-16.0A3L400D-WJ30UU	WJ30UU	1	●	M20	8033554	292,00
MC166-16.0A3L500D-WJ30UU	WJ30UU	1	●	M20	8033555	292,00
MC166-16.0A3X100L-WJ30UU	WJ30UU	1	●	M20	8033546	313,00
MC166-16.0A3X200L-WJ30UU	WJ30UU	1	●	M20	8033547	313,00
MC166-16.0A3X300L-WJ30UU	WJ30UU	1	●	M20	8033548	313,00
MC166-16.0A3X400L-WJ30UU	WJ30UU	1	●	M20	8033549	313,00
MC166-16.0A3X500L-WJ30UU	WJ30UU	1	●	M20	8033550	313,00
MC166-20.0A3L100D-WJ30UU	WJ30UU	1	●	M20	8033561	446,00
MC166-20.0A3L200D-WJ30UU	WJ30UU	1	●	M20	8033562	446,00
MC166-20.0A3L300D-WJ30UU	WJ30UU	1	●	M20	8033563	446,00
MC166-20.0A3L400D-WJ30UU	WJ30UU	1	●	M20	8033564	446,00
MC166-20.0A3L500D-WJ30UU	WJ30UU	1	●	M20	8033565	446,00
MC166-20.0A3X100L-WJ30UU	WJ30UU	1	●	M20	8033556	477,00
MC166-20.0A3X200L-WJ30UU	WJ30UU	1	●	M20	8033557	477,00
MC166-20.0A3X300L-WJ30UU	WJ30UU	1	●	M20	8033558	477,00
MC166-20.0A3X400L-WJ30UU	WJ30UU	1	●	M20	8033559	477,00
MC166-20.0A3X500L-WJ30UU	WJ30UU	1	●	M20	8033560	477,00
MC183-06.0W6B-WB10TG	WB10TG	1	●	M20	7254356	72,90
MC183-08.0W8B-WB10TG	WB10TG	1	●	M20	7254357	111,00
MC183-10.0W10B-WB10TG	WB10TG	1	●	M20	7254358	155,00
MC183-12.0W12B-WB10TG	WB10TG	1	●	M20	7254359	223,00
MC183-16.0W16B-WB10TG	WB10TG	1	●	M20	7254440	403,00
MC187-03.0A4B-WB10TG	WB10TG	1	●	M20	7254741	66,30
MC187-03.0A4B050-WB10TG	WB10TG	1	●	M20	7254524	72,90
MC187-04.0A4B-WB10TG	WB10TG	1	●	M20	7254742	66,30
MC187-04.0A4B050-WB10TG	WB10TG	1	●	M20	7254525	72,90
MC187-04.0A4B100-WB10TG	WB10TG	1	●	M20	7254526	72,90

Bezeichnung / Designation	Sorte / Grade	VE / US		Disc. Gr.	Article No.	EURO Stück / piece
MC187-05.0A4B-WB10TG	WB10TG	1	●	M20	7254743	66,30
MC187-05.0A6B050-WB10TG	WB10TG	1	●	M20	7254527	80,20
MC187-05.0A6B100-WB10TG	WB10TG	1	●	M20	7254528	80,20
MC187-06.0A6B-WB10TG	WB10TG	1	●	M20	7254744	72,90
MC187-06.0A6B050-WB10TG	WB10TG	1	●	M20	7254529	80,20
MC187-06.0A6B100-WB10TG	WB10TG	1	●	M20	7254730	80,20
MC187-06.0A6L-WB10TG	WB10TG	1	●	M20	7254745	102,00
MC187-08.0A6B-WB10TG	WB10TG	1	●	M20	7254746	102,00
MC187-08.0A6B050-WB10TG	WB10TG	1	●	M20	7254731	112,00
MC187-08.0A6B100-WB10TG	WB10TG	1	●	M20	7254732	112,00
MC187-08.0A6B200-WB10TG	WB10TG	1	●	M20	7254733	112,00
MC187-08.0A6L-WB10TG	WB10TG	1	●	M20	7254747	117,00
MC187-10.0A6B-WB10TG	WB10TG	1	●	M20	7254748	131,00
MC187-10.0A6B050-WB10TG	WB10TG	1	●	M20	7254734	144,00
MC187-10.0A6B100-WB10TG	WB10TG	1	●	M20	7254735	144,00
MC187-10.0A6B200-WB10TG	WB10TG	1	●	M20	7254736	144,00
MC187-10.0A6L-WB10TG	WB10TG	1	●	M20	7254749	151,00
MC187-12.0A6B-WB10TG	WB10TG	1	●	M20	7254750	175,00
MC187-12.0A6B050-WB10TG	WB10TG	1	●	M20	7254737	192,00
MC187-12.0A6B100-WB10TG	WB10TG	1	●	M20	7254738	192,00
MC187-12.0A6B200-WB10TG	WB10TG	1	●	M20	7254739	192,00
MC187-12.0A6B300-WB10TG	WB10TG	1	●	M20	7254740	192,00
MC187-12.0A6L-WB10TG	WB10TG	1	●	M20	7254751	245,00
MC187-16.0A6B-WB10TG	WB10TG	1	●	M20	7254752	277,00
MC187-16.0A6L-WB10TG	WB10TG	1	●	M20	7254753	388,00
MC187-20.0A8B-WB10TG	WB10TG	1	●	M20	7254754	461,00
MC187-20.0A8L-WB10TG	WB10TG	1	●	M20	7254755	646,00
MC187-25.0A8B-WB10TG	WB10TG	1	●	M20	7254756	541,00
MC187-25.0A8L-WB10TG	WB10TG	1	●	M20	7254757	757,00
MC187.3.18A4D038-WB10TG	WB10TG	1	●	M20	7266772	79,60
MC187.4.76A4D038-WB10TG	WB10TG	1	●	M20	7266773	79,60
MC187.6.35A6D038-WB10TG	WB10TG	1	●	M20	7266774	107,00
MC187.7.94A6D051-WB10TG	WB10TG	1	●	M20	7266775	123,00
MC187.9.53A6D076-WB10TG	WB10TG	1	●	M20	7266776	137,00
MC187.12.7A6D076-WB10TG	WB10TG	1	●	M20	7266777	256,00
MC187.15.9A6D152-WB10TG	WB10TG	1	●	M20	7266778	405,00
MC187.19.1A8D152-WB10TG	WB10TG	1	●	M20	7266779	554,00
MC213-00.6A2L006C-WJ30TF	WJ30TF	1	●	M20	6579851	88,50
MC213-00.8A2L008C-WJ30TF	WJ30TF	1	●	M20	6579852	83,00
MC213-01.0A2L010C-WJ30TF	WJ30TF	1	●	M20	6579854	80,20
MC213-01.5A2L015C-WJ30TF	WJ30TF	1	●	M20	6579853	74,70
MC213-02.0A2L020C-WJ30TF	WJ30TF	1	●	M20	6579862	69,20
MC213-02.0A2L050C-WJ30TF	WJ30TF	1	●	M20	6579863	69,20
MC213-03.0A2L020C-WJ30TF	WJ30TF	1	●	M20	6579864	69,20
MC213-03.0A2L030C-WJ30TF	WJ30TF	1	●	M20	6579865	69,20
MC213-04.0A2L040C-WJ30TF	WJ30TF	1	●	M20	6579866	69,20
MC213-04.0A2X050R-WJ30TF	WJ30TF	1	●	M20	6626066	84,20
MC213-04.0A2X050S-WJ30TF	WJ30TF	1	●	M20	6626067	84,20
MC213-04.0A2X050T-WJ30TF	WJ30TF	1	●	M20	6626068	84,20
MC213-05.0A2L050C-WJ30TF	WJ30TF	1	●	M20	6579867	69,20
MC213-05.0A2X050R-WJ30TF	WJ30TF	1	●	M20	6626069	84,20
MC213-05.0A2X050S-WJ30TF	WJ30TF	1	●	M20	6626080	84,20
MC213-06.0A2L020C-WJ30TF	WJ30TF	1	●	M20	6579868	69,20
MC213-06.0A2L050C-WJ30TF	WJ30TF	1	●	M20	6579869	69,20
MC213-06.0A4X050R-WJ30TF	WJ30TF	1	●	M20	6626081	93,50
MC213-06.0A4X050S-WJ30TF	WJ30TF	1	●	M20	6626082	93,50
MC213-06.0A4X050T-WJ30TF	WJ30TF	1	●	M20	6626083	93,50
MC213-06.3A2X-WJ30TF	WJ30TF	1	●	M20	6579781	69,60
MC213-08.0A2L030C-WJ30TF	WJ30TF	1	●	M20	6579870	96,80
MC213-08.0A2L050C-WJ30TF	WJ30TF	1	●	M20	6579871	96,80
MC213-08.0A2L100C-WJ30TF	WJ30TF	1	●	M20	6579872	96,80
MC213-08.0A4X050R-WJ30TF	WJ30TF	1	●	M20	6626084	131,00
MC213-08.0A4X050S-WJ30TF	WJ30TF	1	●	M20	6626085	131,00
MC213-08.0A4X050T-WJ30TF	WJ30TF	1	●	M20	6626086	131,00
MC213-08.3A2X-WJ30TF	WJ30TF	1	●	M20	6579782	107,00
MC213-10.0A2L030C-WJ30TF	WJ30TF	1	●	M20	6579855	124,00
MC213-10.0A2L050C-WJ30TF	WJ30TF	1	●	M20	6579856	124,00
MC213-10.0A2L100C-WJ30TF	WJ30TF	1	●	M20	6579857	124,00
MC213-10.0A2L150C-WJ30TF	WJ30TF	1	●	M20	6579858	124,00
MC213-10.0A4X100S-WJ30TF	WJ30TF	1	●	M20	6626063	168,00

Bezeichnung / Designation	Sorte / Grade	VE / US		Disc. Gr.	Article No.	EURO Stück / piece
MC213-10.0A4X100T-WJ30TF	WJ30TF	1	●	M20	6626064	168,00
MC213-10.3A2X-WJ30TF	WJ30TF	1	●	M20	6579777	138,00
MC213-12.0A2L050C-WJ30TF	WJ30TF	1	●	M20	6579859	166,00
MC213-12.0A2L100C-WJ30TF	WJ30TF	1	●	M20	6579860	166,00
MC213-12.0A4X100S-WJ30TF	WJ30TF	1	●	M20	6626065	225,00
MC213-14.5A2X-WJ30TF	WJ30TF	1	●	M20	6579779	223,00
MC213.9.53A4L076C-WJ30TF	WJ30TF	1	●	M20	7092382[1]	131,00
MC216-01.0A3BJ-WJ30TF	WJ30TF	1	■	M20	6579741[2]	60,90
MC216-01.0A3L-WJ30TF	WJ30TF	1	■	M20	6579765[2]	70,00
MC216-01.1A3BJ-WJ30TF	WJ30TF	1	■	M20	6579742[2]	60,90
MC216-01.2A3BJ-WJ30TF	WJ30TF	1	■	M20	6579743[2]	58,80
MC216-01.3A3BJ-WJ30TF	WJ30TF	1	■	M20	6579744[2]	58,80
MC216-01.4A3BJ-WJ30TF	WJ30TF	1	■	M20	6579745[2]	58,80
MC216-01.5A3BJ-WJ30TF	WJ30TF	1	■	M20	6579746[2]	56,70
MC216-01.5A3L-WJ30TF	WJ30TF	1	■	M20	6579766[2]	65,20
MC216-01.6A3BJ-WJ30TF	WJ30TF	1	■	M20	6579747[2]	56,70
MC216-01.7A3BJ-WJ30TF	WJ30TF	1	■	M20	6579748[2]	54,60
MC216-01.8A3BJ-WJ30TF	WJ30TF	1	■	M20	6579749[2]	54,60
MC216-01.9A3BJ-WJ30TF	WJ30TF	1	■	M20	6579750[2]	54,60
MC216-02.0A2B-WJ30TF	WJ30TF	1	■	M20	6579706[2]	49,70
MC216-02.0A3B-WJ30TF	WJ30TF	1	■	M20	6579726[2]	52,50
MC216-02.0A3BJ-WJ30TF	WJ30TF	1	■	M20	6579761[2]	52,50
MC216-02.0A3BK-WJ30TF	WJ30TF	1	●	M20	6579762[2]	52,50
MC216-02.0A3L-WJ30TF	WJ30TF	1	■	M20	6579770[2]	60,30
MC216-02.1A3BJ-WJ30TF	WJ30TF	1	■	M20	6579751[2]	52,50
MC216-02.2A3BJ-WJ30TF	WJ30TF	1	■	M20	6579752[2]	52,50
MC216-02.3A3BJ-WJ30TF	WJ30TF	1	■	M20	6579753[2]	52,50
MC216-02.4A3BJ-WJ30TF	WJ30TF	1	■	M20	6579754[2]	52,50
MC216-02.5A2B-WJ30TF	WJ30TF	1	■	M20	6579707[2]	49,70
MC216-02.5A3B-WJ30TF	WJ30TF	1	■	M20	6579727[2]	52,50
MC216-02.5A3BJ-WJ30TF	WJ30TF	1	■	M20	6579755[2]	52,50
MC216-02.5A3BK-WJ30TF	WJ30TF	1	●	M20	6579756[2]	52,50
MC216-02.6A3BJ-WJ30TF	WJ30TF	1	■	M20	6579757[2]	52,50
MC216-02.7A3BJ-WJ30TF	WJ30TF	1	■	M20	6579758[2]	52,50
MC216-02.8A3BJ-WJ30TF	WJ30TF	1	■	M20	6579759[2]	52,50
MC216-02.9A3BJ-WJ30TF	WJ30TF	1	■	M20	6579760[2]	52,50
MC216-03.0A2B-WJ30TF	WJ30TF	1	■	M20	6579709[2]	49,70
MC216-03.0A3B-WJ30TF	WJ30TF	1	■	M20	6579729[2]	52,50
MC216-03.0A3BJ-WJ30TF	WJ30TF	1	■	M20	6579763[2]	52,50
MC216-03.0A3BK-WJ30TF	WJ30TF	1	●	M20	6579764[2]	52,50
MC216-03.0A3L-WJ30TF	WJ30TF	1	■	M20	6579772[2]	60,30
MC216-03.5A2B-WJ30TF	WJ30TF	1	■	M20	6579710[2]	49,70
MC216-03.5A3B-WJ30TF	WJ30TF	1	■	M20	6579730[2]	52,50
MC216-04.0A2B-WJ30TF	WJ30TF	1	■	M20	6579711[2]	49,70
MC216-04.0A3B-WJ30TF	WJ30TF	1	■	M20	6579731[2]	52,50
MC216-04.0A3L-WJ30TF	WJ30TF	1	■	M20	6579773[2]	60,30
MC216-04.5A2B-WJ30TF	WJ30TF	1	■	M20	6579712[2]	49,70
MC216-04.5A3B-WJ30TF	WJ30TF	1	■	M20	6579732[2]	52,50
MC216-05.0A2B-WJ30TF	WJ30TF	1	■	M20	6579713[2]	49,70
MC216-05.0A3B-WJ30TF	WJ30TF	1	■	M20	6579733[2]	52,50
MC216-05.0A3L-WJ30TF	WJ30TF	1	■	M20	6579774[2]	60,30
MC216-05.5A3B-WJ30TF	WJ30TF	1	■	M20	6579734[2]	52,50
MC216-06.0A2B-WJ30TF	WJ30TF	1	■	M20	6579714[2]	49,70
MC216-06.0A3B-WJ30TF	WJ30TF	1	■	M20	6579735[2]	52,50
MC216-06.0A3L-WJ30TF	WJ30TF	1	■	M20	6579775[2]	60,30
MC216-06.5A3B-WJ30TF	WJ30TF	1	■	M20	6579736[2]	52,50
MC216-07.0A2B-WJ30TF	WJ30TF	1	■	M20	6579715[2]	59,60
MC216-07.0A3B-WJ30TF	WJ30TF	1	■	M20	6579737[2]	63,00
MC216-07.5A3B-WJ30TF	WJ30TF	1	■	M20	6579738[2]	63,00
MC216-08.0A2B-WJ30TF	WJ30TF	1	■	M20	6579716[2]	69,60
MC216-08.0A3B-WJ30TF	WJ30TF	1	■	M20	6579739[2]	73,50
MC216-08.0A3L-WJ30TF	WJ30TF	1	■	M20	6579776[2]	84,40
MC216-09.0A2B-WJ30TF	WJ30TF	1	■	M20	6579717[2]	79,50
MC216-09.0A3B-WJ30TF	WJ30TF	1	■	M20	6579740[2]	84,00
MC216-10.0A2B-WJ30TF	WJ30TF	1	■	M20	6579700[2]	89,50
MC216-10.0A3B-WJ30TF	WJ30TF	1	■	M20	6579718[2]	94,40
MC216-10.0A3L-WJ30TF	WJ30TF	1	■	M20	6579767[2]	109,00
MC216-11.0A2B-WJ30TF	WJ30TF	1	■	M20	6579701[2]	99,40
MC216-11.0A3B-WJ30TF	WJ30TF	1	■	M20	6579719[2]	105,00
MC216-12.0A2B-WJ30TF	WJ30TF	1	■	M20	6579702[2]	119,00

Bezeichnung / Designation	Sorte / Grade	VE / US		Disc. Gr.	Article No.	EURO Stück / piece
MC216-12.0A3B-WJ30TF	WJ30TF	1	■	M20	6579720*	126,00
MC216-12.0A3L-WJ30TF	WJ30TF	1	■	M20	6579768*	145,00
MC216-13.0A3B-WJ30TF	WJ30TF	1	■	M20	6579721*	147,00
MC216-14.0A2B-WJ30TF	WJ30TF	1	■	M20	6579703*	159,00
MC216-14.0A3B-WJ30TF	WJ30TF	1	■	M20	6579722*	168,00
MC216-15.0A3B-WJ30TF	WJ30TF	1	■	M20	6579723*	189,00
MC216-16.0A2B-WJ30TF	WJ30TF	1	■	M20	6579704*	189,00
MC216-16.0A3B-WJ30TF	WJ30TF	1	■	M20	6579724*	199,00
MC216-16.0A3L-WJ30TF	WJ30TF	1	■	M20	6579769*	229,00
MC216-18.0A2B-WJ30TF	WJ30TF	1	■	M20	6579705*	230,00
MC216-18.0A3B-WJ30TF	WJ30TF	1	■	M20	6579725*	243,00
MC216-20.0A2B-WJ30TF	WJ30TF	1	■	M20	6579708*	288,00
MC216-20.0A3B-WJ30TF	WJ30TF	1	■	M20	6579728*	304,00
MC216-20.0A3L-WJ30TF	WJ30TF	1	■	M20	6579771*	350,00
MC216.2.38A2D-WJ30TF	WJ30TF	1	●	M20	7092361	47,20
MC230-01.0A3BJ-WK40TF	WK40TF	1	●	M20	8303129	49,10
MC230-01.0A3L-WK40TF	WK40TF	1	●	M20	8303152	51,40
MC230-01.0W3B-WK40TF	WK40TF	1	●	M20	8303216	44,70
MC230-01.1A3BJ-WK40TF	WK40TF	1	●	M20	8303130	49,10
MC230-01.2A3BJ-WK40TF	WK40TF	1	●	M20	8303131	47,40
MC230-01.3A3BJ-WK40TF	WK40TF	1	●	M20	8303132	47,40
MC230-01.4A3BJ-WK40TF	WK40TF	1	●	M20	8303133	47,40
MC230-01.5A3BJ-WK40TF	WK40TF	1	●	M20	8303134	45,70
MC230-01.5A3L-WK40TF	WK40TF	1	●	M20	8303153	47,80
MC230-01.5W3B-WK40TF	WK40TF	1	●	M20	8303217	41,60
MC230-01.6A3BJ-WK40TF	WK40TF	1	●	M20	8303135	45,70
MC230-01.7A3BJ-WK40TF	WK40TF	1	●	M20	8303136	44,10
MC230-01.8A3BJ-WK40TF	WK40TF	1	●	M20	8303137	44,10
MC230-01.9A3BJ-WK40TF	WK40TF	1	●	M20	8303138	44,10
MC230-02.0A2B-WK40TF	WK40TF	1	●	M20	8303078	36,50
MC230-02.0A3B-WK40TF	WK40TF	1	●	M20	8303106	38,50
MC230-02.0A3BJ-WK40TF	WK40TF	1	●	M20	8303139	42,40
MC230-02.0A3L-WK40TF	WK40TF	1	●	M20	8303154	44,30
MC230-02.0A3S-WK40TF	WK40TF	1	●	M20	8303163	28,90
MC230-02.0A4A-WK40TF	WK40TF	1	●	M20	8303171	38,50
MC230-02.0A4BC-WK40TF	WK40TF	1	●	M20	8001959	44,60
MC230-02.0A4B020C-WK40TF	WK40TF	1	●	M20	8002018	49,00
MC230-02.0A4S-WK40TF	WK40TF	1	●	M20	8303198	30,40
MC230-02.0W3B-WK40TF	WK40TF	1	●	M20	8303215	38,50
MC230-02.0W4A-WK40TF	WK40TF	1	●	M20	8303233	38,50
MC230-02.0W4BC-WK40TF	WK40TF	1	●	M20	8002057	44,60
MC230-02.1A3BJ-WK40TF	WK40TF	1	●	M20	8303140	42,40
MC230-02.2A3BJ-WK40TF	WK40TF	1	●	M20	8303141	42,40
MC230-02.3A3BJ-WK40TF	WK40TF	1	●	M20	8303142	42,40
MC230-02.4A3BJ-WK40TF	WK40TF	1	●	M20	8303143	42,40
MC230-02.5A2B-WK40TF	WK40TF	1	●	M20	8303079	36,50
MC230-02.5A3B-WK40TF	WK40TF	1	●	M20	8303107	38,50
MC230-02.5A3BJ-WK40TF	WK40TF	1	●	M20	8303144	42,40
MC230-02.5A4BC-WK40TF	WK40TF	1	●	M20	8002000	44,60
MC230-02.5W3B-WK40TF	WK40TF	1	●	M20	8303218	38,50
MC230-02.5W4BC-WK40TF	WK40TF	1	●	M20	8002058	44,60
MC230-02.6A3BJ-WK40TF	WK40TF	1	●	M20	8303145	42,40
MC230-02.7A3BJ-WK40TF	WK40TF	1	●	M20	8303146	42,40
MC230-02.8A3BJ-WK40TF	WK40TF	1	●	M20	8303147	42,40
MC230-02.9A3BJ-WK40TF	WK40TF	1	●	M20	8303148	42,40
MC230-03.0A2B-WK40TF	WK40TF	1	●	M20	8303090	36,50
MC230-03.0A3B-WK40TF	WK40TF	1	●	M20	8303108	38,50
MC230-03.0A3BJ-WK40TF	WK40TF	1	●	M20	8303149	42,40
MC230-03.0A3L-WK40TF	WK40TF	1	●	M20	8303150	44,30
MC230-03.0A3S-WK40TF	WK40TF	1	●	M20	8303164	28,90
MC230-03.0A4A-WK40TF	WK40TF	1	●	M20	8303172	38,50
MC230-03.0A4BC-WK40TF	WK40TF	1	●	M20	8002001	44,60
MC230-03.0A4B030C-WK40TF	WK40TF	1	●	M20	8002019	49,00
MC230-03.0A4B050C-WK40TF	WK40TF	1	●	M20	8002020	49,00
MC230-03.0A4S-WK40TF	WK40TF	1	●	M20	8303199	30,40
MC230-03.0W3B-WK40TF	WK40TF	1	●	M20	8303219	38,50
MC230-03.0W4A-WK40TF	WK40TF	1	●	M20	8303234	38,50
MC230-03.0W4BC-WK40TF	WK40TF	1	●	M20	8002059	44,60
MC230-03.5A2B-WK40TF	WK40TF	1	●	M20	8303091	36,50
MC230-03.5A3B-WK40TF	WK40TF	1	●	M20	8303109	38,50

Bezeichnung / Designation	Sorte / Grade	VE / US		Disc. Gr.	Article No.	EURO Stück / piece
MC230-03.5A4BC-WK40TF	WK40TF	1	●	M20	8002002	44,60
MC230-03.5W3B-WK40TF	WK40TF	1	●	M20	8303220	38,50
MC230-04.0A2B-WK40TF	WK40TF	1	●	M20	8303092	36,50
MC230-04.0A3B-WK40TF	WK40TF	1	●	M20	8303110	38,50
MC230-04.0A3L-WK40TF	WK40TF	1	●	M20	8303155	44,30
MC230-04.0A3S-WK40TF	WK40TF	1	●	M20	8303165	28,90
MC230-04.0A4A-WK40TF	WK40TF	1	●	M20	8303173	38,50
MC230-04.0A4BC-WK40TF	WK40TF	1	●	M20	8002003	44,60
MC230-04.0A4B020C-WK40TF	WK40TF	1	●	M20	8002021	49,00
MC230-04.0A4B050C-WK40TF	WK40TF	1	●	M20	8002022	49,00
MC230-04.0A4S-WK40TF	WK40TF	1	●	M20	8303200	30,40
MC230-04.0W3B-WK40TF	WK40TF	1	●	M20	8303221	38,50
MC230-04.0W4A-WK40TF	WK40TF	1	●	M20	8303235	38,50
MC230-04.0W4BC-WK40TF	WK40TF	1	●	M20	8002060	44,60
MC230-04.0W4XL-WK40TF	WK40TF	1	●	M20	8303259	62,40
MC230-04.5A2B-WK40TF	WK40TF	1	●	M20	8303093	36,50
MC230-04.5A3B-WK40TF	WK40TF	1	●	M20	8303111	38,50
MC230-04.5A4BC-WK40TF	WK40TF	1	●	M20	8002004	44,60
MC230-04.5W3B-WK40TF	WK40TF	1	●	M20	8303222	38,50
MC230-05.0A2B-WK40TF	WK40TF	1	●	M20	8303094	36,50
MC230-05.0A3B-WK40TF	WK40TF	1	●	M20	8303112	38,50
MC230-05.0A3L-WK40TF	WK40TF	1	●	M20	8303156	44,30
MC230-05.0A3S-WK40TF	WK40TF	1	●	M20	8303166	28,90
MC230-05.0A4A-WK40TF	WK40TF	1	●	M20	8303174	38,50
MC230-05.0A4BC-WK40TF	WK40TF	1	●	M20	8002005	44,60
MC230-05.0A4B050C-WK40TF	WK40TF	1	●	M20	8002023	49,00
MC230-05.0A4B100C-WK40TF	WK40TF	1	●	M20	8002024	49,00
MC230-05.0A4S-WK40TF	WK40TF	1	●	M20	8303201	30,40
MC230-05.0W3B-WK40TF	WK40TF	1	●	M20	8303223	38,50
MC230-05.0W4A-WK40TF	WK40TF	1	●	M20	8303236	38,50
MC230-05.0W4BC-WK40TF	WK40TF	1	●	M20	8002061	44,60
MC230-05.0W4B050C-WK40TF	WK40TF	1	●	M20	8002073	49,00
MC230-05.0W4XL-WK40TF	WK40TF	1	●	M20	8303260	62,40
MC230-05.5A3B-WK40TF	WK40TF	1	●	M20	8303113	38,50
MC230-05.5A4BC-WK40TF	WK40TF	1	●	M20	8002006	44,60
MC230-05.5W3B-WK40TF	WK40TF	1	●	M20	8303224	38,50
MC230-06.0A2B-WK40TF	WK40TF	1	●	M20	8303095	36,50
MC230-06.0A3B-WK40TF	WK40TF	1	●	M20	8303114	38,50
MC230-06.0A3L-WK40TF	WK40TF	1	●	M20	8303157	44,30
MC230-06.0A3S-WK40TF	WK40TF	1	●	M20	8303167	28,90
MC230-06.0A4A-WK40TF	WK40TF	1	●	M20	8303175	38,50
MC230-06.0A4BC-WK40TF	WK40TF	1	●	M20	8002007	44,60
MC230-06.0A4B050C-WK40TF	WK40TF	1	●	M20	8002025	49,00
MC230-06.0A4B080C-WK40TF	WK40TF	1	●	M20	8002026	49,00
MC230-06.0A4B100C-WK40TF	WK40TF	1	●	M20	8002027	49,00
MC230-06.0A4L-WK40TF	WK40TF	1	●	M20	8303185	46,60
MC230-06.0A4LC-WK40TF	WK40TF	1	●	M20	8302864	51,30
MC230-06.0A4L050C-WK40TF	WK40TF	1	●	M20	8302916	56,40
MC230-06.0A4L100C-WK40TF	WK40TF	1	●	M20	8302917	56,40
MC230-06.0A4S-WK40TF	WK40TF	1	●	M20	8303197	30,40
MC230-06.0A4XL-WK40TF	WK40TF	1	●	M20	8303209	62,40
MC230-06.0W3B-WK40TF	WK40TF	1	●	M20	8303225	38,50
MC230-06.0W4A-WK40TF	WK40TF	1	●	M20	8303237	38,50
MC230-06.0W4BC-WK40TF	WK40TF	1	●	M20	8002062	44,60
MC230-06.0W4B050C-WK40TF	WK40TF	1	●	M20	8002074	49,00
MC230-06.0W4B080C-WK40TF	WK40TF	1	●	M20	8002075	49,00
MC230-06.0W4B100C-WK40TF	WK40TF	1	●	M20	8002076	49,00
MC230-06.0W4L-WK40TF	WK40TF	1	●	M20	8303191	46,60
MC230-06.0W4LC-WK40TF	WK40TF	1	●	M20	8302910	51,30
MC230-06.0W4XL-WK40TF	WK40TF	1	●	M20	8303261	62,40
MC230-06.0W5B-WK40TF	WK40TF	1	●	M20	8303244	42,60
MC230-06.0W5L-WK40TF	WK40TF	1	●	M20	8303250	48,90
MC230-06.5A3B-WK40TF	WK40TF	1	●	M20	8303115	42,40
MC230-06.5A4BC-WK40TF	WK40TF	1	●	M20	8002008	49,00
MC230-07.0A2B-WK40TF	WK40TF	1	●	M20	8303096	43,80
MC230-07.0A3B-WK40TF	WK40TF	1	●	M20	8303116	46,20
MC230-07.0A4A-WK40TF	WK40TF	1	●	M20	8303176	46,20
MC230-07.0A4BC-WK40TF	WK40TF	1	●	M20	8002009	53,50
MC230-07.0W4BC-WK40TF	WK40TF	1	●	M20	8002063	53,50
MC230-07.5A3B-WK40TF	WK40TF	1	●	M20	8303117	46,20

Bezeichnung / Designation	Sorte / Grade	VE / US		Disc. Gr.	Article No.	EURO Stück / piece
MC230-08.0A2B-WK40TF	WK40TF	1	●	M20	8303097	51,10
MC230-08.0A3B-WK40TF	WK40TF	1	●	M20	8303118	53,90
MC230-08.0A3L-WK40TF	WK40TF	1	●	M20	8303158	62,00
MC230-08.0A3S-WK40TF	WK40TF	1	●	M20	8303168	40,40
MC230-08.0A4A-WK40TF	WK40TF	1	●	M20	8303177	53,90
MC230-08.0A4BC-WK40TF	WK40TF	1	●	M20	8002010	62,40
MC230-08.0A4B050C-WK40TF	WK40TF	1	●	M20	8002028	68,70
MC230-08.0A4B080C-WK40TF	WK40TF	1	●	M20	8002029	68,70
MC230-08.0A4B100C-WK40TF	WK40TF	1	●	M20	8002030	68,70
MC230-08.0A4B150C-WK40TF	WK40TF	1	●	M20	8002031	68,70
MC230-08.0A4B200C-WK40TF	WK40TF	1	●	M20	8002032	68,70
MC230-08.0A4L-WK40TF	WK40TF	1	●	M20	8303186	65,30
MC230-08.0A4LC-WK40TF	WK40TF	1	●	M20	8302865	71,80
MC230-08.0A4L050C-WK40TF	WK40TF	1	●	M20	8302918	79,00
MC230-08.0A4L100C-WK40TF	WK40TF	1	●	M20	8302919	79,00
MC230-08.0A4L200C-WK40TF	WK40TF	1	●	M20	8302920	79,00
MC230-08.0A4S-WK40TF	WK40TF	1	●	M20	8303202	42,60
MC230-08.0A4XL-WK40TF	WK40TF	1	●	M20	8303210	87,40
MC230-08.0W3B-WK40TF	WK40TF	1	●	M20	8303226	53,90
MC230-08.0W4A-WK40TF	WK40TF	1	●	M20	8303238	53,90
MC230-08.0W4BC-WK40TF	WK40TF	1	●	M20	8002064	62,40
MC230-08.0W4B050C-WK40TF	WK40TF	1	●	M20	8002077	68,70
MC230-08.0W4B080C-WK40TF	WK40TF	1	●	M20	8002078	68,70
MC230-08.0W4B100C-WK40TF	WK40TF	1	●	M20	8002079	68,70
MC230-08.0W4B150C-WK40TF	WK40TF	1	●	M20	8002080	68,70
MC230-08.0W4B200C-WK40TF	WK40TF	1	●	M20	8002081	68,70
MC230-08.0W4L-WK40TF	WK40TF	1	●	M20	8303192	65,30
MC230-08.0W4LC-WK40TF	WK40TF	1	●	M20	8302911	71,80
MC230-08.0W4XL-WK40TF	WK40TF	1	●	M20	8303262	87,40
MC230-08.0W5B-WK40TF	WK40TF	1	●	M20	8303245	59,60
MC230-08.0W5L-WK40TF	WK40TF	1	●	M20	8303252	68,50
MC230-09.0A2B-WK40TF	WK40TF	1	●	M20	8303098	58,40
MC230-09.0A3B-WK40TF	WK40TF	1	●	M20	8303119	61,60
MC230-09.0A4BC-WK40TF	WK40TF	1	●	M20	8002011	71,30
MC230-09.0W3B-WK40TF	WK40TF	1	●	M20	8303227	61,60
MC230-09.0W4BC-WK40TF	WK40TF	1	●	M20	8002065	71,30
MC230-10.0A2B-WK40TF	WK40TF	1	●	M20	8303099	65,70
MC230-10.0A3B-WK40TF	WK40TF	1	●	M20	8303120	69,30
MC230-10.0A3L-WK40TF	WK40TF	1	●	M20	8303151	79,70
MC230-10.0A3S-WK40TF	WK40TF	1	●	M20	8303162	52,00
MC230-10.0A4A-WK40TF	WK40TF	1	●	M20	8303170	69,30
MC230-10.0A4BC-WK40TF	WK40TF	1	●	M20	8002012	80,20
MC230-10.0A4B050C-WK40TF	WK40TF	1	●	M20	8002033	88,30
MC230-10.0A4B080C-WK40TF	WK40TF	1	●	M20	8002034	88,30
MC230-10.0A4B100C-WK40TF	WK40TF	1	●	M20	8002035	88,30
MC230-10.0A4B150C-WK40TF	WK40TF	1	●	M20	8002036	88,30
MC230-10.0A4B200C-WK40TF	WK40TF	1	●	M20	8002037	88,30
MC230-10.0A4L-WK40TF	WK40TF	1	●	M20	8303183	83,90
MC230-10.0A4LC-WK40TF	WK40TF	1	●	M20	8302866	92,30
MC230-10.0A4L050C-WK40TF	WK40TF	1	●	M20	8302921	102,00
MC230-10.0A4L100C-WK40TF	WK40TF	1	●	M20	8302922	102,00
MC230-10.0A4L200C-WK40TF	WK40TF	1	●	M20	8302923	102,00
MC230-10.0A4S-WK40TF	WK40TF	1	●	M20	8303203	54,70
MC230-10.0A4XL-WK40TF	WK40TF	1	●	M20	8303211	112,00
MC230-10.0W3B-WK40TF	WK40TF	1	●	M20	8303228	69,30
MC230-10.0W4A-WK40TF	WK40TF	1	●	M20	8303239	69,30
MC230-10.0W4BC-WK40TF	WK40TF	1	●	M20	8002066	80,20
MC230-10.0W4B050C-WK40TF	WK40TF	1	●	M20	8002082	88,30
MC230-10.0W4B080C-WK40TF	WK40TF	1	●	M20	8002083	88,30
MC230-10.0W4B100C-WK40TF	WK40TF	1	●	M20	8002084	88,30
MC230-10.0W4B150C-WK40TF	WK40TF	1	●	M20	8002085	88,30
MC230-10.0W4B200C-WK40TF	WK40TF	1	●	M20	8002086	88,30
MC230-10.0W4L-WK40TF	WK40TF	1	●	M20	8303193	83,90
MC230-10.0W4LC-WK40TF	WK40TF	1	●	M20	8302912	92,30
MC230-10.0W4XL-WK40TF	WK40TF	1	●	M20	8303257	112,00
MC230-10.0W5B-WK40TF	WK40TF	1	●	M20	8303246	76,60
MC230-10.0W5L-WK40TF	WK40TF	1	●	M20	8303253	88,10
MC230-11.0A2B-WK40TF	WK40TF	1	●	M20	8303100	73,00
MC230-11.0A3B-WK40TF	WK40TF	1	●	M20	8303121	77,00
MC230-12.0A2B-WK40TF	WK40TF	1	●	M20	8303101	87,60

Bezeichnung / Designation	Sorte / Grade	VE / US		Disc. Gr.	Article No.	EURO Stück / piece
MC230-12.0A3B-WK40TF	WK40TF	1	●	M20	8303122	92,40
MC230-12.0A3L-WK40TF	WK40TF	1	●	M20	8303159	106,00
MC230-12.0A3S-WK40TF	WK40TF	1	●	M20	8303169	69,30
MC230-12.0A4A-WK40TF	WK40TF	1	●	M20	8303178	92,40
MC230-12.0A4BC-WK40TF	WK40TF	1	●	M20	8002013	107,00
MC230-12.0A4B050C-WK40TF	WK40TF	1	●	M20	8002038	118,00
MC230-12.0A4B080C-WK40TF	WK40TF	1	●	M20	8002039	118,00
MC230-12.0A4B100C-WK40TF	WK40TF	1	●	M20	8002040	118,00
MC230-12.0A4B150C-WK40TF	WK40TF	1	●	M20	8002041	118,00
MC230-12.0A4B200C-WK40TF	WK40TF	1	●	M20	8002042	118,00
MC230-12.0A4B250C-WK40TF	WK40TF	1	●	M20	8002043	118,00
MC230-12.0A4B300C-WK40TF	WK40TF	1	●	M20	8002044	118,00
MC230-12.0A4L-WK40TF	WK40TF	1	●	M20	8303187	112,00
MC230-12.0A4LC-WK40TF	WK40TF	1	●	M20	8302867	123,00
MC230-12.0A4L050C-WK40TF	WK40TF	1	●	M20	8302924	135,00
MC230-12.0A4L100C-WK40TF	WK40TF	1	●	M20	8302925	135,00
MC230-12.0A4L200C-WK40TF	WK40TF	1	●	M20	8302926	135,00
MC230-12.0A4L300C-WK40TF	WK40TF	1	●	M20	8302927	135,00
MC230-12.0A4S-WK40TF	WK40TF	1	●	M20	8303204	73,00
MC230-12.0A4XL-WK40TF	WK40TF	1	●	M20	8303212	150,00
MC230-12.0W3B-WK40TF	WK40TF	1	●	M20	8303229	92,40
MC230-12.0W4A-WK40TF	WK40TF	1	●	M20	8303240	92,40
MC230-12.0W4BC-WK40TF	WK40TF	1	●	M20	8002067	107,00
MC230-12.0W4B050C-WK40TF	WK40TF	1	●	M20	8002087	118,00
MC230-12.0W4B080C-WK40TF	WK40TF	1	●	M20	8002088	118,00
MC230-12.0W4B100C-WK40TF	WK40TF	1	●	M20	8002089	118,00
MC230-12.0W4B150C-WK40TF	WK40TF	1	●	M20	8002090	118,00
MC230-12.0W4B200C-WK40TF	WK40TF	1	●	M20	8002091	118,00
MC230-12.0W4B250C-WK40TF	WK40TF	1	●	M20	8002092	118,00
MC230-12.0W4B300C-WK40TF	WK40TF	1	●	M20	8002093	118,00
MC230-12.0W4L-WK40TF	WK40TF	1	●	M20	8303194	112,00
MC230-12.0W4LC-WK40TF	WK40TF	1	●	M20	8302913	123,00
MC230-12.0W4XL-WK40TF	WK40TF	1	●	M20	8303263	150,00
MC230-12.0W5B-WK40TF	WK40TF	1	●	M20	8303247	102,00
MC230-12.0W5L-WK40TF	WK40TF	1	●	M20	8303251	117,00
MC230-13.0A3B-WK40TF	WK40TF	1	●	M20	8303123	108,00
MC230-14.0A2B-WK40TF	WK40TF	1	●	M20	8303102	117,00
MC230-14.0A3B-WK40TF	WK40TF	1	●	M20	8303124	123,00
MC230-14.0A4A-WK40TF	WK40TF	1	●	M20	8303179	123,00
MC230-14.0A4BC-WK40TF	WK40TF	1	●	M20	8002014	143,00
MC230-14.0A4L-WK40TF	WK40TF	1	●	M20	8303188	149,00
MC230-14.0W3B-WK40TF	WK40TF	1	●	M20	8303230	123,00
MC230-14.0W4A-WK40TF	WK40TF	1	●	M20	8303241	123,00
MC230-14.0W4BC-WK40TF	WK40TF	1	●	M20	8002068	143,00
MC230-14.0W4L-WK40TF	WK40TF	1	●	M20	8303195	149,00
MC230-14.0W4XL-WK40TF	WK40TF	1	●	M20	8303264	200,00
MC230-15.0A3B-WK40TF	WK40TF	1	●	M20	8303125	139,00
MC230-16.0A2B-WK40TF	WK40TF	1	●	M20	8303103	139,00
MC230-16.0A3B-WK40TF	WK40TF	1	●	M20	8303126	146,00
MC230-16.0A3L-WK40TF	WK40TF	1	●	M20	8303160	168,00
MC230-16.0A4A-WK40TF	WK40TF	1	●	M20	8303180	146,00
MC230-16.0A4BC-WK40TF	WK40TF	1	●	M20	8002015	169,00
MC230-16.0A4B050C-WK40TF	WK40TF	1	●	M20	8002045	186,00
MC230-16.0A4B100C-WK40TF	WK40TF	1	●	M20	8002046	186,00
MC230-16.0A4B200C-WK40TF	WK40TF	1	●	M20	8002047	186,00
MC230-16.0A4B250C-WK40TF	WK40TF	1	●	M20	8002048	186,00
MC230-16.0A4B300C-WK40TF	WK40TF	1	●	M20	8002049	186,00
MC230-16.0A4B400C-WK40TF	WK40TF	1	●	M20	8002050	186,00
MC230-16.0A4LC-WK40TF	WK40TF	1	●	M20	8302868	195,00
MC230-16.0A4L100C-WK40TF	WK40TF	1	●	M20	8302928	214,00
MC230-16.0A4L200C-WK40TF	WK40TF	1	●	M20	8302929	214,00
MC230-16.0A4L400C-WK40TF	WK40TF	1	●	M20	8302930	214,00
MC230-16.0A5L-WK40TF	WK40TF	1	●	M20	8303189	186,00
MC230-16.0A5XK-WK40TF	WK40TF	1	●	M20	8303207	249,00
MC230-16.0A5XL-WK40TF	WK40TF	1	●	M20	8303208	249,00
MC230-16.0W3B-WK40TF	WK40TF	1	●	M20	8303231	146,00
MC230-16.0W4A-WK40TF	WK40TF	1	●	M20	8303242	146,00
MC230-16.0W4BC-WK40TF	WK40TF	1	●	M20	8002069	169,00
MC230-16.0W4B050C-WK40TF	WK40TF	1	●	M20	8002094	186,00
MC230-16.0W4B100C-WK40TF	WK40TF	1	●	M20	8002095	186,00

Bezeichnung / Designation	Sorte / Grade	VE / US		Disc. Gr.	Article No.	EURO Stück / piece
MC230-16.0W4B200C-WK40TF	WK40TF	1	●	M20	8002096	186,00
MC230-16.0W4B250C-WK40TF	WK40TF	1	●	M20	8002097	186,00
MC230-16.0W4B300C-WK40TF	WK40TF	1	●	M20	8002098	186,00
MC230-16.0W4B400C-WK40TF	WK40TF	1	●	M20	8002099	186,00
MC230-16.0W4LC-WK40TF	WK40TF	1	●	M20	8302914	195,00
MC230-16.0W5B-WK40TF	WK40TF	1	●	M20	8303248	162,00
MC230-16.0W5L-WK40TF	WK40TF	1	●	M20	8303184	186,00
MC230-16.0W5XK-WK40TF	WK40TF	1	●	M20	8303256	249,00
MC230-16.0W5XL-WK40TF	WK40TF	1	●	M20	8303265	249,00
MC230-18.0A2B-WK40TF	WK40TF	1	●	M20	8303104	182,00
MC230-18.0A3B-WK40TF	WK40TF	1	●	M20	8303127	193,00
MC230-18.0A4A-WK40TF	WK40TF	1	●	M20	8303181	193,00
MC230-18.0A4BC-WK40TF	WK40TF	1	●	M20	8002016	223,00
MC230-18.0W4BC-WK40TF	WK40TF	1	●	M20	8002070	223,00
MC230-18.0W5XL-WK40TF	WK40TF	1	●	M20	8303266	328,00
MC230-20.0A2B-WK40TF	WK40TF	1	●	M20	8303105	212,00
MC230-20.0A3B-WK40TF	WK40TF	1	●	M20	8303128	223,00
MC230-20.0A3L-WK40TF	WK40TF	1	●	M20	8303161	257,00
MC230-20.0A4A-WK40TF	WK40TF	1	●	M20	8303182	223,00
MC230-20.0A4BC-WK40TF	WK40TF	1	●	M20	8002017	259,00
MC230-20.0A4B050C-WK40TF	WK40TF	1	●	M20	8002051	284,00
MC230-20.0A4B100C-WK40TF	WK40TF	1	●	M20	8002052	284,00
MC230-20.0A4B200C-WK40TF	WK40TF	1	●	M20	8002053	284,00
MC230-20.0A4B250C-WK40TF	WK40TF	1	●	M20	8002054	284,00
MC230-20.0A4B300C-WK40TF	WK40TF	1	●	M20	8002055	284,00
MC230-20.0A4B400C-WK40TF	WK40TF	1	●	M20	8002056	284,00
MC230-20.0A4LC-WK40TF	WK40TF	1	●	M20	8302869	297,00
MC230-20.0A4L100C-WK40TF	WK40TF	1	●	M20	8302931	327,00
MC230-20.0A4L200C-WK40TF	WK40TF	1	●	M20	8302932	327,00
MC230-20.0A4L400C-WK40TF	WK40TF	1	●	M20	8302933	327,00
MC230-20.0A5L-WK40TF	WK40TF	1	●	M20	8303190	284,00
MC230-20.0A6LJ-WK40TF	WK40TF	1	●	M20	8303205	327,00
MC230-20.0A6XL-WK40TF	WK40TF	1	●	M20	8303213	398,00
MC230-20.0W3B-WK40TF	WK40TF	1	●	M20	8303232	223,00
MC230-20.0W4A-WK40TF	WK40TF	1	●	M20	8303243	223,00
MC230-20.0W4BC-WK40TF	WK40TF	1	●	M20	8002071	259,00
MC230-20.0W4B050C-WK40TF	WK40TF	1	●	M20	8002100	284,00
MC230-20.0W4B100C-WK40TF	WK40TF	1	●	M20	8002101	284,00
MC230-20.0W4B200C-WK40TF	WK40TF	1	●	M20	8002102	284,00
MC230-20.0W4B250C-WK40TF	WK40TF	1	●	M20	8002103	284,00
MC230-20.0W4B300C-WK40TF	WK40TF	1	●	M20	8002104	284,00
MC230-20.0W4B400C-WK40TF	WK40TF	1	●	M20	8002105	284,00
MC230-20.0W4LC-WK40TF	WK40TF	1	●	M20	8302915	297,00
MC230-20.0W5B-WK40TF	WK40TF	1	●	M20	8303249	247,00
MC230-20.0W5L-WK40TF	WK40TF	1	●	M20	8303196	284,00
MC230-20.0W6LJ-WK40TF	WK40TF	1	●	M20	8303254	327,00
MC230-20.0W6XL-WK40TF	WK40TF	1	●	M20	8303258	398,00
MC230-25.0A8LJ-WK40TF	WK40TF	1	●	M20	8303206	443,00
MC230-25.0A8XL-WK40TF	WK40TF	1	●	M20	8303214	539,00
MC230-25.0W4BC-WK40TF	WK40TF	1	●	M20	8002072	321,00
MC230-25.0W4B100C-WK40TF	WK40TF	1	●	M20	8002106	353,00
MC230-25.0W4B200C-WK40TF	WK40TF	1	●	M20	8002107	353,00
MC230-25.0W4B300C-WK40TF	WK40TF	1	●	M20	8002108	353,00
MC230-25.0W4B400C-WK40TF	WK40TF	1	●	M20	8002109	353,00
MC230-25.0W8LJ-WK40TF	WK40TF	1	●	M20	8303255	443,00
MC230-25.0W8XL-WK40TF	WK40TF	1	●	M20	8303267	539,00
MC232-02.0A2B-WJ30ED	WJ30ED	1	●	M10	7022529	24,85
MC232-02.0A3B-WJ30ED	WJ30ED	1	●	M10	7022541	26,20
MC232-02.0A3BC-WJ30ED	WJ30ED	1	●	M10	7353974	28,90
MC232-02.0A4B-WJ30ED	WJ30ED	1	●	M10	7022553	29,00
MC232-02.0A4BC-WJ30ED	WJ30ED	1	●	M10	7353962	31,90
MC232-02.0A4B020C-WJ30ED	WJ30ED	1	●	M10	7568696	35,10
MC232-02.5A2B-WJ30ED	WJ30ED	1	●	M10	7022530	24,85
MC232-02.5A3B-WJ30ED	WJ30ED	1	●	M10	7022542	26,20
MC232-02.5A3BC-WJ30ED	WJ30ED	1	●	M10	7353975	28,90
MC232-02.5A4B-WJ30ED	WJ30ED	1	●	M10	7022554	29,00
MC232-02.5A4BC-WJ30ED	WJ30ED	1	●	M10	7353963	31,90
MC232-03.0A2B-WJ30ED	WJ30ED	1	●	M10	7022531	24,85
MC232-03.0A3B-WJ30ED	WJ30ED	1	●	M10	7022543	26,20
MC232-03.0A3BC-WJ30ED	WJ30ED	1	●	M10	7353976	28,90

Bezeichnung / Designation	Sorte / Grade	VE / US		Disc. Gr.	Article No.	EURO Stück / piece
MC232-03.0A4B-WJ30ED	WJ30ED	1	●	M10	7022555	29,00
MC232-03.0A4BC-WJ30ED	WJ30ED	1	●	M10	7353964	31,90
MC232-03.0A4B030C-WJ30ED	WJ30ED	1	●	M10	7568697	35,10
MC232-03.5A2B-WJ30ED	WJ30ED	1	●	M10	7022532	24,85
MC232-03.5A3B-WJ30ED	WJ30ED	1	●	M10	7022544	26,20
MC232-03.5A3BC-WJ30ED	WJ30ED	1	●	M10	7353977	28,90
MC232-03.5A4B-WJ30ED	WJ30ED	1	●	M10	7022556	29,00
MC232-03.5A4BC-WJ30ED	WJ30ED	1	●	M10	7353965	31,90
MC232-04.0A2B-WJ30ED	WJ30ED	1	●	M10	7022533	24,85
MC232-04.0A3B-WJ30ED	WJ30ED	1	●	M10	7022545	26,20
MC232-04.0A3BC-WJ30ED	WJ30ED	1	●	M10	7353978	28,90
MC232-04.0A4B-WJ30ED	WJ30ED	1	●	M10	7022557	29,00
MC232-04.0A4BC-WJ30ED	WJ30ED	1	●	M10	7353966	31,90
MC232-04.0A4B050C-WJ30ED	WJ30ED	1	●	M10	7568698	35,10
MC232-05.0W2B-WJ30ED	WJ30ED	1	●	M10	7022534	24,85
MC232-05.0W3B-WJ30ED	WJ30ED	1	●	M10	7022546	26,20
MC232-05.0W3BC-WJ30ED	WJ30ED	1	●	M10	7353979	28,90
MC232-05.0W4B-WJ30ED	WJ30ED	1	●	M10	7022558	29,00
MC232-05.0W4BC-WJ30ED	WJ30ED	1	●	M10	7353967	31,90
MC232-05.0W4B050C-WJ30ED	WJ30ED	1	●	M10	7568699	35,10
MC232-06.0W2B-WJ30ED	WJ30ED	1	●	M10	7022535	24,85
MC232-06.0W3B-WJ30ED	WJ30ED	1	●	M10	7022547	26,20
MC232-06.0W3BC-WJ30ED	WJ30ED	1	●	M10	7353980	28,90
MC232-06.0W4B-WJ30ED	WJ30ED	1	●	M10	7022559	29,00
MC232-06.0W4BC-WJ30ED	WJ30ED	1	●	M10	7353968	31,90
MC232-06.0W4B050C-WJ30ED	WJ30ED	1	●	M10	7568710	35,10
MC232-06.0W4B080C-WJ30ED	WJ30ED	1	●	M10	7568711	35,10
MC232-06.0W4B100C-WJ30ED	WJ30ED	1	●	M10	7568712	35,10
MC232-08.0W2B-WJ30ED	WJ30ED	1	●	M10	7022536	34,80
MC232-08.0W3B-WJ30ED	WJ30ED	1	●	M10	7022548	36,70
MC232-08.0W3BC-WJ30ED	WJ30ED	1	●	M10	7353981	40,40
MC232-08.0W4B-WJ30ED	WJ30ED	1	●	M10	7022560	40,60
MC232-08.0W4BC-WJ30ED	WJ30ED	1	●	M10	7353969	44,60
MC232-08.0W4B050C-WJ30ED	WJ30ED	1	●	M10	7568713	49,10
MC232-08.0W4B080C-WJ30ED	WJ30ED	1	●	M10	7568714	49,10
MC232-08.0W4B100C-WJ30ED	WJ30ED	1	●	M10	7568715	49,10
MC232-08.0W4B150C-WJ30ED	WJ30ED	1	●	M10	7568716	49,10
MC232-08.0W4B200C-WJ30ED	WJ30ED	1	●	M10	7568717	49,10
MC232-10.0W2B-WJ30ED	WJ30ED	1	●	M10	7022537	44,70
MC232-10.0W3B-WJ30ED	WJ30ED	1	●	M10	7022549	47,20
MC232-10.0W3BC-WJ30ED	WJ30ED	1	●	M10	7353982	51,90
MC232-10.0W4B-WJ30ED	WJ30ED	1	●	M10	7022561	52,20
MC232-10.0W4BC-WJ30ED	WJ30ED	1	●	M10	7353970	57,40
MC232-10.0W4B050C-WJ30ED	WJ30ED	1	●	M10	7568718	63,20
MC232-10.0W4B080C-WJ30ED	WJ30ED	1	●	M10	7568719	63,20
MC232-10.0W4B100C-WJ30ED	WJ30ED	1	●	M10	7568720	63,20
MC232-10.0W4B150C-WJ30ED	WJ30ED	1	●	M10	7568721	63,20
MC232-10.0W4B200C-WJ30ED	WJ30ED	1	●	M10	7568722	63,20
MC232-12.0W2B-WJ30ED	WJ30ED	1	●	M10	7022538	59,60
MC232-12.0W3B-WJ30ED	WJ30ED	1	●	M10	7022550	63,00
MC232-12.0W3BC-WJ30ED	WJ30ED	1	●	M10	7353983	69,20
MC232-12.0W4B-WJ30ED	WJ30ED	1	●	M10	7022562	69,60
MC232-12.0W4BC-WJ30ED	WJ30ED	1	●	M10	7353971	76,50
MC232-12.0W4B050C-WJ30ED	WJ30ED	1	●	M10	7568723	84,20
MC232-12.0W4B080C-WJ30ED	WJ30ED	1	●	M10	7568724	84,20
MC232-12.0W4B100C-WJ30ED	WJ30ED	1	●	M10	7568725	84,20
MC232-12.0W4B150C-WJ30ED	WJ30ED	1	●	M10	7568726	84,20
MC232-12.0W4B200C-WJ30ED	WJ30ED	1	●	M10	7568727	84,20
MC232-12.0W4B250C-WJ30ED	WJ30ED	1	●	M10	7568728	84,20
MC232-12.0W4B300C-WJ30ED	WJ30ED	1	●	M10	7568729	84,20
MC232-16.0W2B-WJ30ED	WJ30ED	1	●	M10	7022539	94,40
MC232-16.0W3B-WJ30ED	WJ30ED	1	●	M10	7022551	99,70
MC232-16.0W3BC-WJ30ED	WJ30ED	1	●	M10	7353984	110,00
MC232-16.0W4B-WJ30ED	WJ30ED	1	●	M10	7022563	110,00
MC232-16.0W4BC-WJ30ED	WJ30ED	1	●	M10	7353972	121,00
MC232-16.0W4B050C-WJ30ED	WJ30ED	1	●	M10	7568730	133,00
MC232-16.0W4B100C-WJ30ED	WJ30ED	1	●	M10	7568731	133,00
MC232-16.0W4B200C-WJ30ED	WJ30ED	1	●	M10	7568732	133,00
MC232-16.0W4B250C-WJ30ED	WJ30ED	1	●	M10	7568733	133,00
MC232-16.0W4B300C-WJ30ED	WJ30ED	1	●	M10	7568734	133,00

Bezeichnung / Designation	Sorte / Grade	VE / US		Disc. Gr.	Article No.	EURO Stück / piece
MC232-16.0W4B400C-WJ30ED	WJ30ED	1	●	M10	7568735	133,00
MC232-20.0W2B-WJ30ED	WJ30ED	1	●	M10	7022540	144,00
MC232-20.0W3B-WJ30ED	WJ30ED	1	●	M10	7022552	152,00
MC232-20.0W3BC-WJ30ED	WJ30ED	1	●	M10	7353985	167,00
MC232-20.0W4B-WJ30ED	WJ30ED	1	●	M10	7022564	168,00
MC232-20.0W4BC-WJ30ED	WJ30ED	1	●	M10	7353973	185,00
MC232-20.0W4B050C-WJ30ED	WJ30ED	1	●	M10	7568736	203,00
MC232-20.0W4B100C-WJ30ED	WJ30ED	1	●	M10	7568737	203,00
MC232-20.0W4B200C-WJ30ED	WJ30ED	1	●	M10	7568738	203,00
MC232-20.0W4B250C-WJ30ED	WJ30ED	1	●	M10	7568739	203,00
MC232-20.0W4B300C-WJ30ED	WJ30ED	1	●	M10	7568740	203,00
MC232-20.0W4B400C-WJ30ED	WJ30ED	1	●	M10	7568741	203,00
MC232.3.18A2D-WJ30ED	WJ30ED	1	●	M10	7092180	23,61
MC232.3.18A3D-WJ30ED	WJ30ED	1	●	M10	7092185	24,93
MC232.3.18A4D-WJ30ED	WJ30ED	1	●	M10	7092190	27,60
MC232.3.18A4D038C-WJ30ED	WJ30ED	1	●	M10	7568742	33,30
MC232.6.35A2D-WJ30ED	WJ30ED	1	●	M10	7092181	23,61
MC232.6.35A3D-WJ30ED	WJ30ED	1	●	M10	7092186	24,93
MC232.6.35A4D-WJ30ED	WJ30ED	1	●	M10	7092191	27,60
MC232.6.35A4D038C-WJ30ED	WJ30ED	1	●	M10	7568743	33,30
MC232.6.35A4D076C-WJ30ED	WJ30ED	1	●	M10	7568744	33,30
MC232.9.53W2D-WJ30ED	WJ30ED	1	●	M10	7092182	42,50
MC232.9.53W3D-WJ30ED	WJ30ED	1	●	M10	7092187	44,90
MC232.9.53W4D-WJ30ED	WJ30ED	1	●	M10	7092192	49,60
MC232.9.53W4D038C-WJ30ED	WJ30ED	1	●	M10	7568745	60,00
MC232.9.53W4D076C-WJ30ED	WJ30ED	1	●	M10	7568746	60,00
MC232.12.7W2D-WJ30ED	WJ30ED	1	●	M10	7092183	56,70
MC232.12.7W3D-WJ30ED	WJ30ED	1	●	M10	7092188	59,80
MC232.12.7W4D-WJ30ED	WJ30ED	1	●	M10	7092193	66,10
MC232.12.7W4D038C-WJ30ED	WJ30ED	1	●	M10	7568747	80,00
MC232.12.7W4D076C-WJ30ED	WJ30ED	1	●	M10	7568748	80,00
MC232.12.7W4D152C-WJ30ED	WJ30ED	1	●	M10	7568749	80,00
MC232.12.7W4D318C-WJ30ED	WJ30ED	1	●	M10	7568750	80,00
MC232.15.9W2D-WJ30ED	WJ30ED	1	●	M10	7092184	89,70
MC232.15.9W3D-WJ30ED	WJ30ED	1	●	M10	7092189	94,70
MC232.15.9W4D-WJ30ED	WJ30ED	1	●	M10	7092194	105,00
MC232.15.9W4D318C-WJ30ED	WJ30ED	1	●	M10	7568751	127,00
MC232.19.1W2D-WJ30ED	WJ30ED	1	●	M10	7353843	137,00
MC232.19.1W3D-WJ30ED	WJ30ED	1	●	M10	7353844	145,00
MC232.19.1W4D-WJ30ED	WJ30ED	1	●	M10	7353845	160,00
MC232.19.1W4D076C-WJ30ED	WJ30ED	1	●	M10	7568752	193,00
MC232.19.1W4D318C-WJ30ED	WJ30ED	1	●	M10	7568753	193,00
MC233-08.0W4L-WK40TF	WK40TF	1	●	M20	8302985	71,80
MC233-08.0W4XL-WK40TF	WK40TF	1	●	M20	8303071	96,10
MC233-10.0W4L-WK40TF	WK40TF	1	●	M20	8302986	92,30
MC233-10.0W4XL-WK40TF	WK40TF	1	●	M20	8303073	124,00
MC233-12.0W4L-WK40TF	WK40TF	1	●	M20	8302987	123,00
MC233-12.0W4XL-WK40TF	WK40TF	1	●	M20	8303074	165,00
MC233-16.0W5L-WK40TF	WK40TF	1	●	M20	8302988	205,00
MC233-16.0W5XL-WK40TF	WK40TF	1	●	M20	8303075	274,00
MC233-20.0W5L-WK40TF	WK40TF	1	●	M20	8302989	312,00
MC233-20.0W6XL-WK40TF	WK40TF	1	●	M20	8303076	438,00
MC233-25.0W8LJ-WK40TF	WK40TF	1	●	M20	8303070	487,00
MC233-25.0W8XL-WK40TF	WK40TF	1	●	M20	8303072	593,00
MC251-20.0-A4B-WK40RC	WK40RC	1	●	M20	6814316	310,00
MC251-16.0-A4B-WK40RC	WK40RC	1	●	M20	6814315	219,00
MC251-12.0-A4B-WK40RC	WK40RC	1	●	M20	6814314	146,00
MC251-10.0-A4B-WK40RC	WK40RC	1	●	M20	6814313	106,00
MC251-08.0-A4B-WK40RC	WK40RC	1	●	M20	6814312	85,40
MC251-06.0-A4B-WK40RC	WK40RC	1	●	M20	6814311	60,00
MC251-05.0-A4B-WK40RC	WK40RC	1	●	M20	6814310	60,00
MC251-04.0-A4B-WK40RC	WK40RC	1	●	M20	6814309	60,00
MC251-03.0-A4B-WK40RC	WK40RC	1	●	M20	6814308	60,00
MC251-03.0-A4B020-WK40RC	WK40RC	1	●	M20	6814317	66,10
MC251-04.0-A4B020-WK40RC	WK40RC	1	●	M20	6814319	66,10
MC251-08.0-A4B050-WK40RC	WK40RC	1	●	M20	6814325	94,00
MC251-10.0-A4B050-WK40RC	WK40RC	1	●	M20	6814328	117,00
MC251-03.0-A4B050-WK40RC	WK40RC	1	●	M20	6814318	66,10
MC251-04.0-A4B050-WK40RC	WK40RC	1	●	M20	6814320	66,10
MC251-05.0-A4B050-WK40RC	WK40RC	1	●	M20	6814321	66,10

Bezeichnung / Designation	Sorte / Grade	VE / US		Disc. Gr.	Article No.	EURO Stück / piece
MC251-12.0-A4B050-WK40RC	WK40RC	1	●	M20	6814332	160,00
MC251-06.0-A4B050-WK40RC	WK40RC	1	●	M20	6814323	66,10
MC251-16.0-A4B050-WK40RC	WK40RC	1	●	M20	6814337	241,00
MC251-10.0-A4B100-WK40RC	WK40RC	1	●	M20	6814329	117,00
MC251-20.0-A4B100-WK40RC	WK40RC	1	●	M20	6814340	341,00
MC251-08.0-A4B100-WK40RC	WK40RC	1	●	M20	6814326	94,00
MC251-16.0-A4B100-WK40RC	WK40RC	1	●	M20	6814338	241,00
MC251-05.0-A4B100-WK40RC	WK40RC	1	●	M20	6814322	66,10
MC251-06.0-A4B100-WK40RC	WK40RC	1	●	M20	6814324	66,10
MC251-12.0-A4B100-WK40RC	WK40RC	1	●	M20	6814333	160,00
MC251-20.0-A4B165-WK40RC	WK40RC	1	●	M20	6814341	341,00
MC251-12.0-A4B165-WK40RC	WK40RC	1	●	M20	6814334	160,00
MC251-10.0-A4B200-WK40RC	WK40RC	1	●	M20	6814330	117,00
MC251-12.0-A4B200-WK40RC	WK40RC	1	●	M20	6814335	160,00
MC251-08.0-A4B200-WK40RC	WK40RC	1	●	M20	6814327	94,00
MC251-16.0-A4B200-WK40RC	WK40RC	1	●	M20	6814339	241,00
MC251-12.0-A4B300-WK40RC	WK40RC	1	●	M20	6814336	160,00
MC251-10.0-A4B300-WK40RC	WK40RC	1	●	M20	6814331	117,00
MC251-20.0-A4B600-WK40RC	WK40RC	1	●	M20	6814344	341,00
MC267-01.0A2B-WJ30UU	WJ30UU	1	●	M20	8033615	43,80
MC267-01.0A2BC-WJ30UU	WJ30UU	1	●	M20	8033614	48,20
MC267-01.0A3B020C-WJ30CA	WJ30CA	1	●	M20	8033612	70,00
MC267-01.0A3B020C-WJ30UU	WJ30UU	1	●	M20	8033613	56,00
MC267-01.5A2B-WJ30UU	WJ30UU	1	●	M20	8033617	40,80
MC267-01.5A2BC-WJ30UU	WJ30UU	1	●	M20	8033616	44,90
MC267-02.0A2B-WJ30UU	WJ30UU	1	●	M20	8033701	37,80
MC267-02.0A2BC-WJ30UU	WJ30UU	1	●	M20	8033700	41,50
MC267-02.0A3B020C-WJ30CA	WJ30CA	1	●	M20	8033618	60,30
MC267-02.0A3B020C-WJ30UU	WJ30UU	1	●	M20	8033619	48,20
MC267-02.5A2B-WJ30UU	WJ30UU	1	●	M20	8033703	37,80
MC267-02.5A2BC-WJ30UU	WJ30UU	1	●	M20	8033702	41,50
MC267-03.0A2B-WJ30UU	WJ30UU	1	●	M20	8033707	37,80
MC267-03.0A2BC-WJ30UU	WJ30UU	1	●	M20	8033706	41,50
MC267-03.0A3B020C-WJ30CA	WJ30CA	1	●	M20	8033704	60,30
MC267-03.0A3B020C-WJ30UU	WJ30UU	1	●	M20	8033705	48,20
MC267-03.5A2B-WJ30UU	WJ30UU	1	●	M20	8033709	37,80
MC267-03.5A2BC-WJ30UU	WJ30UU	1	●	M20	8033708	41,50
MC267-04.0A2B-WJ30UU	WJ30UU	1	●	M20	8033713	37,80
MC267-04.0A2BC-WJ30UU	WJ30UU	1	●	M20	8033712	41,50
MC267-04.0A3B030C-WJ30CA	WJ30CA	1	●	M20	8033710	60,30
MC267-04.0A3B030C-WJ30UU	WJ30UU	1	●	M20	8033711	48,20
MC267-05.0A2BC-WJ30UU	WJ30UU	1	●	M20	8033717	41,50
MC267-05.0A2B050C-WJ30UU	WJ30UU	1	●	M20	8033716	45,70
MC267-05.0A3B050C-WJ30CA	WJ30CA	1	●	M20	8033714	60,30
MC267-05.0A3B050C-WJ30UU	WJ30UU	1	●	M20	8033715	48,20
MC267-06.0A2BC-WJ30UU	WJ30UU	1	●	M20	8033721	41,50
MC267-06.0A2B050C-WJ30UU	WJ30UU	1	●	M20	8033720	45,70
MC267-06.0A3B050C-WJ30CA	WJ30CA	1	●	M20	8033718	60,30
MC267-06.0A3B050C-WJ30UU	WJ30UU	1	●	M20	8033719	48,20
MC267-08.0A2BC-WJ30UU	WJ30UU	1	●	M20	8033725	58,20
MC267-08.0A2B050C-WJ30UU	WJ30UU	1	●	M20	8033724	64,00
MC267-08.0A3B050C-WJ30CA	WJ30CA	1	●	M20	8033722	84,40
MC267-08.0A3B050C-WJ30UU	WJ30UU	1	●	M20	8033723	67,50
MC267-10.0A2BC-WJ30UU	WJ30UU	1	●	M20	8033731	74,80
MC267-10.0A2B050C-WJ30UU	WJ30UU	1	●	M20	8033728	82,30
MC267-10.0A2B100C-WJ30UU	WJ30UU	1	●	M20	8033729	82,30
MC267-10.0A2B200C-WJ30UU	WJ30UU	1	●	M20	8033730	82,30
MC267-10.0A3B050C-WJ30CA	WJ30CA	1	●	M20	8033726	109,00
MC267-10.0A3B050C-WJ30UU	WJ30UU	1	●	M20	8033727	86,80
MC267-12.0A2BC-WJ30UU	WJ30UU	1	●	M20	8033738	99,70
MC267-12.0A2B050C-WJ30UU	WJ30UU	1	●	M20	8033734	110,00
MC267-12.0A2B100C-WJ30UU	WJ30UU	1	●	M20	8033735	110,00
MC267-12.0A2B200C-WJ30UU	WJ30UU	1	●	M20	8033736	110,00
MC267-12.0A2B300C-WJ30UU	WJ30UU	1	●	M20	8033737	110,00
MC267-12.0A3B050C-WJ30CA	WJ30CA	1	●	M20	8033732	145,00
MC267-12.0A3B050C-WJ30UU	WJ30UU	1	●	M20	8033733	116,00
MC267-16.0A2BC-WJ30UU	WJ30UU	1	●	M20	8033744	158,00
MC267-16.0A2B050C-WJ30UU	WJ30UU	1	●	M20	8033741	174,00
MC267-16.0A2B300C-WJ30UU	WJ30UU	1	●	M20	8033742	174,00
MC267-16.0A2B400C-WJ30UU	WJ30UU	1	●	M20	8033743	174,00

Bezeichnung / Designation	Sorte / Grade	VE / US		Disc. Gr.	Article No.	EURO Stück / piece
MC267-16.0A3B050C-WJ30CA	WJ30CA	1	●	M20	8033739	229,00
MC267-16.0A3B050C-WJ30UU	WJ30UU	1	●	M20	8033740	183,00
MC267-20.0A2BC-WJ30UU	WJ30UU	1	●	M20	8033750	241,00
MC267-20.0A2B050C-WJ30UU	WJ30UU	1	●	M20	8033747	265,00
MC267-20.0A2B300C-WJ30UU	WJ30UU	1	●	M20	8033748	265,00
MC267-20.0A2B400C-WJ30UU	WJ30UU	1	●	M20	8033749	265,00
MC267-20.0A3B050C-WJ30CA	WJ30CA	1	●	M20	8033745	350,00
MC267-20.0A3B050C-WJ30UU	WJ30UU	1	●	M20	8033746	280,00
MC268-06.0A3B-WJ30UU	WJ30UU	1	●	M20	8200360	49,80
MC268-06.0A3B050-WJ30UU	WJ30UU	1	●	M20	8200361	54,80
MC268-06.0A3B100-WJ30UU	WJ30UU	1	●	M20	8200362	54,80
MC268-06.0A3LD-WJ30UU	WJ30UU	1	●	M20	8200363	63,10
MC268-06.0A3L050D-WJ30UU	WJ30UU	1	●	M20	8200364	69,40
MC268-06.0A3L100D-WJ30UU	WJ30UU	1	●	M20	8200365	69,40
MC268-08.0A3B-WJ30UU	WJ30UU	1	●	M20	8200366	69,80
MC268-08.0A3B050-WJ30UU	WJ30UU	1	●	M20	8200367	76,80
MC268-08.0A3B100-WJ30UU	WJ30UU	1	●	M20	8200368	76,80
MC268-08.0A3B200-WJ30UU	WJ30UU	1	●	M20	8200369	76,80
MC268-08.0A3LC-WJ30UU	WJ30UU	1	●	M20	8200370	88,30
MC268-08.0A3L050C-WJ30UU	WJ30UU	1	●	M20	8200371	97,10
MC268-08.0A3L100C-WJ30UU	WJ30UU	1	●	M20	8200372	97,10
MC268-08.0A3L200C-WJ30UU	WJ30UU	1	●	M20	8200373	97,10
MC268-10.0A3B-WJ30UU	WJ30UU	1	●	M20	8200374	89,70
MC268-10.0A3B050-WJ30UU	WJ30UU	1	●	M20	8200375	98,70
MC268-10.0A3B100-WJ30UU	WJ30UU	1	●	M20	8200376	98,70
MC268-10.0A3B200-WJ30UU	WJ30UU	1	●	M20	8200377	98,70
MC268-10.0A3LC-WJ30UU	WJ30UU	1	●	M20	8200378	113,00
MC268-10.0A3L050C-WJ30UU	WJ30UU	1	●	M20	8200379	125,00
MC268-10.0A3L100C-WJ30UU	WJ30UU	1	●	M20	8200380	125,00
MC268-10.0A3L200C-WJ30UU	WJ30UU	1	●	M20	8200381	125,00
MC268-12.0A3B-WJ30UU	WJ30UU	1	●	M20	8200382	120,00
MC268-12.0A3B100-WJ30UU	WJ30UU	1	●	M20	8200383	132,00
MC268-12.0A3B200-WJ30UU	WJ30UU	1	●	M20	8200384	132,00
MC268-12.0A3B300-WJ30UU	WJ30UU	1	●	M20	8200385	132,00
MC268-12.0A3LD-WJ30UU	WJ30UU	1	●	M20	8200386	151,00
MC268-12.0A3L100D-WJ30UU	WJ30UU	1	●	M20	8200387	166,00
MC268-12.0A3L200D-WJ30UU	WJ30UU	1	●	M20	8200388	166,00
MC268-12.0A3L300D-WJ30UU	WJ30UU	1	●	M20	8200389	166,00
MC268-16.0A3B-WJ30UU	WJ30UU	1	●	M20	8200396	189,00
MC268-16.0A3LC-WJ30UU	WJ30UU	1	●	M20	8200397	287,00
MC268-16.0A3L200C-WJ30UU	WJ30UU	1	●	M20	8200390	316,00
MC268-16.0A3L300C-WJ30UU	WJ30UU	1	●	M20	8200391	316,00
MC268-16.0A3L400C-WJ30UU	WJ30UU	1	●	M20	8200392	316,00
MC268-16.0A4L200C-WJ30UU	WJ30UU	1	●	M20	8200393	333,00
MC268-16.0A4L300C-WJ30UU	WJ30UU	1	●	M20	8200394	333,00
MC268-16.0A4L400C-WJ30UU	WJ30UU	1	●	M20	8200395	333,00
MC268-20.0A3B-WJ30UU	WJ30UU	1	●	M20	8200402	289,00
MC268-20.0A3BC-WJ30UU	WJ30UU	1	●	M20	8200403	382,00
MC268-20.0A3B300C-WJ30UU	WJ30UU	1	●	M20	8200398	420,00
MC268-20.0A3B400C-WJ30UU	WJ30UU	1	●	M20	8200399	420,00
MC268-20.0A4B300C-WJ30UU	WJ30UU	1	●	M20	8200400	442,00
MC268-20.0A4B400C-WJ30UU	WJ30UU	1	●	M20	8200401	442,00
MC268-25.0A3BC-WJ30UU	WJ30UU	1	●	M20	8200410	474,00
MC268-25.0A3B300C-WJ30UU	WJ30UU	1	●	M20	8200404	521,00
MC268-25.0A3B400C-WJ30UU	WJ30UU	1	●	M20	8200405	521,00
MC268-25.0A3LC-WJ30UU	WJ30UU	1	●	M20	8200411	545,00
MC268-25.0A3L300C-WJ30UU	WJ30UU	1	●	M20	8200406	599,00
MC268-25.0A3L400C-WJ30UU	WJ30UU	1	●	M20	8200407	599,00
MC268-25.0A4B300C-WJ30UU	WJ30UU	1	●	M20	8200408	548,00
MC268-25.0A4B400C-WJ30UU	WJ30UU	1	●	M20	8200409	548,00
MC275-08.0A4P100C-WIS10	WIS10	1	●	MS7	7393542	183,00
MC275-10.0A4P100C-WIS10	WIS10	1	●	MS7	7393543	235,00
MC275-12.0A4P100C-WIS10	WIS10	1	●	MS7	7393544	313,00
MC275-12.0A6P100C-WIS10	WIS10	1	●	MS7	7393545	344,00
MC275-12.0E4P100-WIS10	WIS10	1	●	MS5	7393921	134,00
MC275-12.0E6P100-WIS10	WIS10	1	●	MS5	7393922	147,00
MC275-16.0E6P150-WIS10	WIS10	2	●	MS5	7393923	228,00
MC275-16.0E8P150-WIS10	WIS10	1	●	MS5	7393924	248,00
MC275-20.0E6P150-WIS10	WIS10	1	●	MS5	7393925	272,00
MC275-20.0E8P150-WIS10	WIS10	1	●	MS5	7393926	297,00

Bezeichnung / Designation	Sorte / Grade	VE / US		Disc. Gr.	Article No.	EURO Stück / piece
MC275-25.0E6P150-WIS10	WIS10	1	●	MS5	7393927	338,00
MC275-25.0E8P150-WIS10	WIS10	1	●	MS5	7393928	369,00
MC281-01.0A2M020B-WB10TG	WB10TG	1	●	M20	7254793	92,30
MC281-01.0A2M020F-WB10TG	WB10TG	1	●	M20	7254794	92,30
MC281-01.0A2M020H-WB10TG	WB10TG	1	●	M20	7254795	92,30
MC281-1.25A2M020D-WB10TG	WB10TG	1	●	M20	7254796	89,10
MC281-01.5A2M020C-WB10TG	WB10TG	1	●	M20	7254797	85,90
MC281-01.5A2M020E-WB10TG	WB10TG	1	●	M20	7254798	85,90
MC281-01.5A2M020G-WB10TG	WB10TG	1	●	M20	7254799	85,90
MC281-02.0A2M020B-WB10TG	WB10TG	1	●	M20	7254830	79,50
MC281-02.0A2M020C-WB10TG	WB10TG	1	●	M20	7254831	79,50
MC281-02.0A2M020F-WB10TG	WB10TG	1	●	M20	7254832	79,50
MC281-02.0A2M020G-WB10TG	WB10TG	1	●	M20	7254833	79,50
MC281-03.0A2M020C-WB10TG	WB10TG	1	●	M20	7254834	79,50
MC281-03.0A2M020E-WB10TG	WB10TG	1	●	M20	7254835	79,50
MC281-03.0A2M020F-WB10TG	WB10TG	1	●	M20	7254836	79,50
MC281-04.0A2M050C-WB10TG	WB10TG	1	●	M20	7254837	79,50
MC281-04.0A2M050E-WB10TG	WB10TG	1	●	M20	7254838	79,50
MC319-05.0W4BC-WK40TF	WK40TF	1	●	M20	7437653	97,00
MC319-06.0W4BC-WK40TF	WK40TF	1	●	M20	7437654	97,00
MC319-07.0W4BC-WK40TF	WK40TF	1	●	M20	7437655	116,00
MC319-08.0W4BC-WK40TF	WK40TF	1	●	M20	7437656	136,00
MC319-09.0W4BC-WK40TF	WK40TF	1	●	M20	7437657	155,00
MC319-10.0W4BC-WK40TF	WK40TF	1	●	M20	7437658	174,00
MC319-11.0W4BC-WK40TF	WK40TF	1	●	M20	7437659	194,00
MC319-12.0W4BC-WK40TF	WK40TF	1	●	M20	7438080	233,00
MC319-13.0W4BC-WK40TF	WK40TF	1	●	M20	7438081	271,00
MC319-14.0W4BC-WK40TF	WK40TF	1	●	M20	7438082	310,00
MC319-16.0W4BC-WK40TF	WK40TF	1	●	M20	7438084	368,00
MC319-18.0W4BC-WK40TF	WK40TF	1	●	M20	7438085	448,00
MC319-20.0W4BC-WK40TF	WK40TF	1	●	M20	7438086	562,00
MC319-25.0W4BC-WK40TF	WK40TF	1	●	M20	7438087	659,00
MC320-04.0W3BC-WK40TF	WK40TF	1	●	M20	7438089	76,80
MC320-04.0W4BC-WK40TF	WK40TF	1	●	M20	7438130	80,80
MC320-05.0W3BC-WK40TF	WK40TF	1	●	M20	7438131	76,80
MC320-05.0W4BC-WK40TF	WK40TF	1	●	M20	7438132	80,80
MC320-06.0W3A-WK40TF	WK40TF	1	●	M20	7438154	66,30
MC320-06.0W3BC-WK40TF	WK40TF	1	●	M20	7438133	76,80
MC320-06.0W4A-WK40TF	WK40TF	1	●	M20	7438155	69,80
MC320-06.0W4BC-WK40TF	WK40TF	1	●	M20	7438134	80,80
MC320-06.0W5BC-WK40TF	WK40TF	1	●	M20	7438135	84,80
MC320-08.0W3A-WK40TF	WK40TF	1	●	M20	7438156	92,80
MC320-08.0W4A-WK40TF	WK40TF	1	●	M20	7438157	97,70
MC320-08.0W4BC-WK40TF	WK40TF	1	●	M20	7438136	113,00
MC320-08.0W5BC-WK40TF	WK40TF	1	●	M20	7438137	119,00
MC320-10.0E4P-WJ30TF	WJ30TF	2	●	MS5	7438178	75,50
MC320-10.0E5P-WJ30TF	WJ30TF	2	●	MS5	7438179	79,50
MC320-10.0W3A-WK40TF	WK40TF	1	●	M20	7438158	119,00
MC320-10.0W4A-WK40TF	WK40TF	1	●	M20	7438159	126,00
MC320-10.0W4BC-WK40TF	WK40TF	1	●	M20	7438138	145,00
MC320-10.0W5BC-WK40TF	WK40TF	1	●	M20	7438139	153,00
MC320-12.0E4P-WJ30TF	WJ30TF	1	●	MS5	7438310	93,90
MC320-12.0E5P-WJ30TF	WJ30TF	1	●	MS5	7438311	98,90
MC320-12.0W3A-WK40TF	WK40TF	1	●	M20	7438160	159,00
MC320-12.0W4A-WK40TF	WK40TF	1	●	M20	7438161	167,00
MC320-12.0W4BC-WK40TF	WK40TF	1	●	M20	7438140	194,00
MC320-12.0W5BC-WK40TF	WK40TF	1	●	M20	7438141	204,00
MC320-14.0W4BC-WK40TF	WK40TF	1	●	M20	7438142	259,00
MC320-14.0W5BC-WK40TF	WK40TF	1	●	M20	7438143	271,00
MC320-16.0E6P-WJ30TF	WJ30TF	1	●	MS5	7438312	160,00
MC320-16.0W3A-WK40TF	WK40TF	1	●	M20	7438162	252,00
MC320-16.0W4A-WK40TF	WK40TF	1	●	M20	7438163	265,00
MC320-16.0W4BC-WK40TF	WK40TF	1	●	M20	7438144	307,00
MC320-16.0W6BC-WK40TF	WK40TF	1	●	M20	7438145	338,00
MC320-18.0W4BC-WK40TF	WK40TF	1	●	M20	7438146	374,00
MC320-18.0W6BC-WK40TF	WK40TF	1	●	M20	7438147	411,00
MC320-20.0E6P-WJ30TF	WJ30TF	1	●	MS5	7438313	191,00
MC320-20.0W3A-WK40TF	WK40TF	1	●	M20	7438164	384,00
MC320-20.0W4A-WK40TF	WK40TF	1	●	M20	7438165	405,00
MC320-20.0W4BC-WK40TF	WK40TF	1	●	M20	7438148	469,00

Bezeichnung / Designation	Sorte / Grade	VE / US		Disc. Gr.	Article No.	EURO Stück / piece
MC320-20.0W6BC-WK40TF	WK40TF	1	●	M20	7438149	515,00
MC320-20.0W8BC-WK40TF	WK40TF	1	●	M20	7438150	562,00
MC320-25.0E8P-WJ30TF	WJ30TF	1	●	MS5	7438314	259,00
MC320-25.0W4BC-WK40TF	WK40TF	1	●	M20	7438151	549,00
MC320-25.0W6BC-WK40TF	WK40TF	1	●	M20	7438152	604,00
MC320-25.0W8BC-WK40TF	WK40TF	1	●	M20	7438153	659,00
MC320.6.35W4DC-WK40TF	WK40TF	1	●	M20	7528157	76,80
MC320.9.52W4DC-WK40TF	WK40TF	1	●	M20	7438169	138,00
MC320.12.7W4DC-WK40TF	WK40TF	1	●	M20	7438170	184,00
MC320.19.1W4DC-WK40TF	WK40TF	1	●	M20	7438172	445,00
MC321-02.0A3A-WJ30TF	WJ30TF	1	■	M20	6959702*	49,80
MC321-02.0A3S-WJ30TF	WJ30TF	1	■	M20	6959703*	39,30
MC321-02.0A4A-WJ30TF	WJ30TF	1	■	M20	6959704*	52,50
MC321-02.0A4S-WJ30TF	WJ30TF	1	■	M20	6959705*	41,40
MC321-03.0A3A-WJ30TF	WJ30TF	1	■	M20	6959706*	49,80
MC321-03.0A3S-WJ30TF	WJ30TF	1	■	M20	6959707*	39,30
MC321-03.0A4A-WJ30TF	WJ30TF	1	■	M20	6959708*	52,50
MC321-03.0A4S-WJ30TF	WJ30TF	1	■	M20	6959709*	41,40
MC321-04.0A3A-WJ30TF	WJ30TF	1	■	M20	6959710*	49,80
MC321-04.0A3S-WJ30TF	WJ30TF	1	■	M20	6959711*	39,30
MC321-04.0A4A-WJ30TF	WJ30TF	1	■	M20	6959712*	52,50
MC321-04.0A4S-WJ30TF	WJ30TF	1	■	M20	6959713*	41,40
MC321-05.0A3A-WJ30TF	WJ30TF	1	■	M20	6959714*	49,80
MC321-05.0A3S-WJ30TF	WJ30TF	1	■	M20	6959715*	39,30
MC321-05.0A4A-WJ30TF	WJ30TF	1	■	M20	6959716*	52,50
MC321-05.0A4S-WJ30TF	WJ30TF	1	■	M20	6959717*	41,40
MC321-06.0A3A-WJ30TF	WJ30TF	1	■	M20	6959718*	49,80
MC321-06.0A3S-WJ30TF	WJ30TF	1	■	M20	6959719*	39,30
MC321-06.0A4A-WJ30TF	WJ30TF	1	■	M20	6959720*	52,50
MC321-06.0A4S-WJ30TF	WJ30TF	1	■	M20	6959721*	41,40
MC321-08.0A3A-WJ30TF	WJ30TF	1	■	M20	6959722*	69,80
MC321-08.0A3S-WJ30TF	WJ30TF	1	■	M20	6959723*	55,10
MC321-08.0A4A-WJ30TF	WJ30TF	1	■	M20	6959724*	73,40
MC321-08.0A4S-WJ30TF	WJ30TF	1	■	M20	6959725*	58,00
MC321-10.0A3A-WJ30TF	WJ30TF	1	■	M20	6959726*	89,70
MC321-10.0A3S-WJ30TF	WJ30TF	1	■	M20	6959727*	70,80
MC321-10.0A4A-WJ30TF	WJ30TF	1	■	M20	6959728*	94,40
MC321-10.0A4S-WJ30TF	WJ30TF	1	■	M20	6959729*	74,60
MC321-12.0A3A-WJ30TF	WJ30TF	1	■	M20	6959730*	120,00
MC321-12.0A3S-WJ30TF	WJ30TF	1	■	M20	6959731*	94,40
MC321-12.0A4A-WJ30TF	WJ30TF	1	■	M20	6959732*	126,00
MC321-12.0A4S-WJ30TF	WJ30TF	1	■	M20	6959733*	99,40
MC321.3.18A4C-WJ30TF	WJ30TF	1	●	M20	6959697	49,80
MC321.4.75A4C-WJ30TF	WJ30TF	1	●	M20	6959698	49,80
MC321.6.35A4C-WJ30TF	WJ30TF	1	●	M20	6959699	49,80
MC321.7.94A4C-WJ30TF	WJ30TF	1	●	M20	6959700	69,80
MC321.9.53A4C-WJ30TF	WJ30TF	1	●	M20	6959701	89,70
MC321.12.7A4C-WJ30TF	WJ30TF	1	●	M20	6959696	140,00
MC322-06.0A4A-WJ30TF	WJ30TF	1	■	M20	6579681*	52,50
MC322-08.0A4A-WJ30TF	WJ30TF	1	■	M20	6579682*	73,50
MC322-10.0A4A-WJ30TF	WJ30TF	1	■	M20	6579677*	94,40
MC322-12.0A4A-WJ30TF	WJ30TF	1	■	M20	6579678*	126,00
MC322-16.0A4A-WJ30TF	WJ30TF	1	■	M20	6579679*	199,00
MC322-20.0A5A-WJ30TF	WJ30TF	1	●	M20	6579680*	319,00
MC324-01.0A3B-WJ30TF	WJ30TF	1	■	M20	6959734*	60,80
MC324-01.0W3B-WJ30TF	WJ30TF	1	■	M20	6959735*	60,90
MC324-01.5A3B-WJ30TF	WJ30TF	1	■	M20	6959736*	56,70
MC324-01.5W3B-WJ30TF	WJ30TF	1	■	M20	6959737*	56,70
MC324-02.0A3B-WJ30TF	WJ30TF	1	■	M20	6959738*	52,50
MC324-02.0W3B-WJ30TF	WJ30TF	1	■	M20	6959739*	52,50
MC324-02.5A3B-WJ30TF	WJ30TF	1	■	M20	6959740*	52,50
MC324-02.5W3B-WJ30TF	WJ30TF	1	■	M20	6959741*	52,50
MC324-03.0A3B-WJ30TF	WJ30TF	1	■	M20	6959742*	52,50
MC324-03.0W3B-WJ30TF	WJ30TF	1	■	M20	6959743*	52,50
MC324-03.5A3B-WJ30TF	WJ30TF	1	■	M20	6959744*	52,50
MC324-03.5W3B-WJ30TF	WJ30TF	1	■	M20	6959745*	52,50
MC324-04.0A3B-WJ30TF	WJ30TF	1	■	M20	6959746*	52,50
MC324-04.0W3B-WJ30TF	WJ30TF	1	■	M20	6959747*	52,50
MC324-04.5A3B-WJ30TF	WJ30TF	1	■	M20	6959748*	52,50
MC324-04.5W3B-WJ30TF	WJ30TF	1	■	M20	6959749*	52,50

Bezeichnung / Designation	Sorte / Grade	VE / US		Disc. Gr.	Article No.	EURO Stück / piece
MC324-05.0A3B-WJ30TF	WJ30TF	1	■	M20	6959750*	52,50
MC324-05.0W3B-WJ30TF	WJ30TF	1	■	M20	6959751*	52,50
MC324-05.5A3B-WJ30TF	WJ30TF	1	■	M20	6959752*	52,50
MC324-05.5W3B-WJ30TF	WJ30TF	1	■	M20	6959753*	52,50
MC324-06.0A3B-WJ30TF	WJ30TF	1	■	M20	6959754*	52,50
MC324-06.0W3B-WJ30TF	WJ30TF	1	■	M20	6959755*	52,50
MC324-07.0A3B-WJ30TF	WJ30TF	1	■	M20	6959756*	63,00
MC324-08.0A3B-WJ30TF	WJ30TF	1	■	M20	6959757*	73,40
MC324-08.0W3B-WJ30TF	WJ30TF	1	■	M20	6959758*	73,50
MC324-09.0A3B-WJ30TF	WJ30TF	1	■	M20	6959759*	83,90
MC324-09.0W3B-WJ30TF	WJ30TF	1	■	M20	6959760*	83,90
MC324-10.0A3B-WJ30TF	WJ30TF	1	■	M20	6959761*	94,40
MC324-10.0W3B-WJ30TF	WJ30TF	1	■	M20	6959762*	94,40
MC324-12.0A3B-WJ30TF	WJ30TF	1	■	M20	6959763*	126,00
MC324-12.0W3B-WJ30TF	WJ30TF	1	■	M20	6959765*	126,00
MC324-12.0W3B150C-WJ30TF	WJ30TF	1	■	M20	7041363*	152,00
MC324-14.0A3B-WJ30TF	WJ30TF	1	■	M20	6959766*	168,00
MC324-14.0W3B-WJ30TF	WJ30TF	1	■	M20	6959768*	185,00
MC324-14.0W3B150C-WJ30TF	WJ30TF	1	■	M20	7041364*	203,00
MC324-16.0A3B-WJ30TF	WJ30TF	1	■	M20	6959769*	219,00
MC324-16.0W3B-WJ30TF	WJ30TF	1	■	M20	6959771*	219,00
MC324-16.0W3B200C-WJ30TF	WJ30TF	1	■	M20	7041365*	241,00
MC324-18.0A3B-WJ30TF	WJ30TF	1	■	M20	6959772*	267,00
MC324-18.0W3B200C-WJ30TF	WJ30TF	1	■	M20	7041366*	294,00
MC324-20.0A3B-WJ30TF	WJ30TF	1	■	M20	6959774*	335,00
MC324-20.0W3B-WJ30TF	WJ30TF	1	■	M20	6959776*	335,00
MC324-20.0W3B200C-WJ30TF	WJ30TF	1	■	M20	7041367*	368,00
MC326-02.0A3B020C-WK40TF	WK40TF	1	●	M30	6579378	78,90
MC326-02.0A3L-WK40TF	WK40TF	1	●	M30	6719340	81,70
MC326-02.0W3B020C-WK40TF	WK40TF	1	●	M30	6579502	80,60
MC326-02.5A3L-WK40TF	WK40TF	1	●	M30	6719341	81,70
MC326-03.0A3B030C-WK40TF	WK40TF	1	●	M30	6579379	78,90
MC326-03.0A3L-WK40TF	WK40TF	1	●	M30	6719342	77,10
MC326-03.0W3B030C-WK40TF	WK40TF	1	●	M30	6579503	80,60
MC326-03.5A3L-WK40TF	WK40TF	1	●	M30	6719343	77,20
MC326-04.0A3B050C-WK40TF	WK40TF	1	●	M30	6579380	78,90
MC326-04.0A3L-WK40TF	WK40TF	1	●	M30	6719344	77,10
MC326-04.0A3LC-WK40TF	WK40TF	1	●	M30	6579453	84,00
MC326-04.0A3L100-WK40TF	WK40TF	1	●	M30	6579319	84,50
MC326-04.0A3L100C-WK40TF	WK40TF	1	●	M30	6579418	93,50
MC326-04.0W3B050C-WK40TF	WK40TF	1	●	M30	6579468	80,80
MC326-04.0W3LC-WK40TF	WK40TF	1	●	M30	6719382	87,90
MC326-04.0W3L100C-WK40TF	WK40TF	1	●	M30	6579505	93,90
MC326-04.5A3L-WK40TF	WK40TF	1	●	M30	6719345	77,20
MC326-05.0A3B050C-WK40TF	WK40TF	1	●	M30	6579381	78,90
MC326-05.0A3L-WK40TF	WK40TF	1	●	M30	6719346	77,10
MC326-05.0A3LC-WK40TF	WK40TF	1	●	M30	6579454	84,00
MC326-05.0A3L100-WK40TF	WK40TF	1	●	M30	6579320	84,50
MC326-05.0A3L100C-WK40TF	WK40TF	1	●	M30	6579420	93,50
MC326-05.0W3B050C-WK40TF	WK40TF	1	●	M30	6579469	80,80
MC326-05.0W3LC-WK40TF	WK40TF	1	●	M30	6719383	87,90
MC326-05.0W3L100C-WK40TF	WK40TF	1	●	M30	6579507	93,90
MC326-06.0A4B-WK40TF	WK40TF	1	●	M30	6719357	67,20
MC326-06.0A4BC-WK40TF	WK40TF	1	●	M30	6579446	72,40
MC326-06.0A4BCJ-WK40TF	WK40TF	1	●	M30	6579462	64,10
MC326-06.0A4B050C-WK40TF	WK40TF	1	●	M30	6579382	78,90
MC326-06.0A4B080C-WK40TF	WK40TF	1	●	M30	6579383	78,90
MC326-06.0A4B100-WK40TF	WK40TF	1	●	M30	6579330	74,00
MC326-06.0A4B100C-WK40TF	WK40TF	1	●	M30	6579384	78,90
MC326-06.0A4L-WK40TF	WK40TF	1	●	M30	6719347	77,10
MC326-06.0A4LC-WK40TF	WK40TF	1	●	M30	6579455	84,00
MC326-06.0A4L050C-WK40TF	WK40TF	1	●	M30	6579423	93,50
MC326-06.0A4L100-WK40TF	WK40TF	1	●	M30	6579321	84,50
MC326-06.0A4L100C-WK40TF	WK40TF	1	●	M30	6579422	93,50
MC326-06.0W4B-WK40TF	WK40TF	1	●	M30	6719366	67,30
MC326-06.0W4BC-WK40TF	WK40TF	1	●	M30	6719375	74,70
MC326-06.0W4BCJ-WK40TF	WK40TF	1	●	M30	6719391	63,90
MC326-06.0W4B050C-WK40TF	WK40TF	1	●	M30	6579470	80,80
MC326-06.0W4B100-WK40TF	WK40TF	1	●	M30	6579354	74,00
MC326-06.0W4B100C-WK40TF	WK40TF	1	●	M30	6579471	81,40

Bezeichnung / Designation	Sorte / Grade	VE / US		Disc. Gr.	Article No.	EURO Stück / piece
MC326-06.0W4LC-WK40TF	WK40TF	1	●	M30	6719384	87,90
MC326-06.0W4L050C-WK40TF	WK40TF	1	●	M30	6579508	93,90
MC326-06.0W4L100C-WK40TF	WK40TF	1	●	M30	6579509	93,90
MC326-07.0A4L-WK40TF	WK40TF	1	●	M30	6719348	107,00
MC326-08.0A4B-WK40TF	WK40TF	1	●	M30	6719358	94,30
MC326-08.0A4BC-WK40TF	WK40TF	1	●	M30	6579447	101,00
MC326-08.0A4BCJ-WK40TF	WK40TF	1	●	M30	6579463	89,70
MC326-08.0A4B050C-WK40TF	WK40TF	1	●	M30	6579385	111,00
MC326-08.0A4B080C-WK40TF	WK40TF	1	●	M30	6579386	111,00
MC326-08.0A4B100C-WK40TF	WK40TF	1	●	M30	6579387	111,00
MC326-08.0A4B150C-WK40TF	WK40TF	1	●	M30	6579388	111,00
MC326-08.0A4B200-WK40TF	WK40TF	1	●	M30	6579331	104,00
MC326-08.0A4B200C-WK40TF	WK40TF	1	●	M30	6579389	111,00
MC326-08.0A4L-WK40TF	WK40TF	1	●	M30	6719349	107,00
MC326-08.0A4LC-WK40TF	WK40TF	1	●	M30	6579456	118,00
MC326-08.0A4L050C-WK40TF	WK40TF	1	●	M30	6579425	130,00
MC326-08.0A4L100C-WK40TF	WK40TF	1	●	M30	6579426	130,00
MC326-08.0A4L200-WK40TF	WK40TF	1	●	M30	6579322	118,00
MC326-08.0A4L200C-WK40TF	WK40TF	1	●	M30	6579424	130,00
MC326-08.0W4B-WK40TF	WK40TF	1	●	M30	6719367	94,30
MC326-08.0W4BC-WK40TF	WK40TF	1	●	M30	6719376	104,00
MC326-08.0W4BCJ-WK40TF	WK40TF	1	●	M30	6719392	89,60
MC326-08.0W4B050C-WK40TF	WK40TF	1	●	M30	6579472	115,00
MC326-08.0W4B100C-WK40TF	WK40TF	1	●	M30	6579473	114,00
MC326-08.0W4B150C-WK40TF	WK40TF	1	●	M30	6579474	114,00
MC326-08.0W4B200-WK40TF	WK40TF	1	●	M30	6579355	104,00
MC326-08.0W4B200C-WK40TF	WK40TF	1	●	M30	6579475	114,00
MC326-08.0W4LC-WK40TF	WK40TF	1	●	M30	6719385	122,00
MC326-08.0W4L050C-WK40TF	WK40TF	1	●	M30	6579510	130,00
MC326-08.0W4L100C-WK40TF	WK40TF	1	●	M30	6579511	132,00
MC326-08.0W4L200C-WK40TF	WK40TF	1	●	M30	6579512	134,00
MC326-09.0A4L-WK40TF	WK40TF	1	●	M30	6719350	136,00
MC326-10.0A4B-WK40TF	WK40TF	1	●	M30	6719359	120,00
MC326-10.0A4BC-WK40TF	WK40TF	1	●	M30	6579448	128,00
MC326-10.0A4BCJ-WK40TF	WK40TF	1	●	M30	6579464	114,00
MC326-10.0A4B050C-WK40TF	WK40TF	1	●	M30	6579390	141,00
MC326-10.0A4B080C-WK40TF	WK40TF	1	●	M30	6579391	141,00
MC326-10.0A4B100C-WK40TF	WK40TF	1	●	M30	6579392	141,00
MC326-10.0A4B150C-WK40TF	WK40TF	1	●	M30	6579393	140,00
MC326-10.0A4B200-WK40TF	WK40TF	1	●	M30	6579332	132,00
MC326-10.0A4B200C-WK40TF	WK40TF	1	●	M30	6579394	140,00
MC326-10.0A4L-WK40TF	WK40TF	1	●	M30	6719351	136,00
MC326-10.0A4LC-WK40TF	WK40TF	1	●	M30	6579457	149,00
MC326-10.0A4L050C-WK40TF	WK40TF	1	●	M30	6579429	165,00
MC326-10.0A4L100C-WK40TF	WK40TF	1	●	M30	6579430	165,00
MC326-10.0A4L200-WK40TF	WK40TF	1	●	M30	6579323	150,00
MC326-10.0A4L200C-WK40TF	WK40TF	1	●	M30	6579427	165,00
MC326-10.0E4P-WJ30TF	WJ30TF	1	●	MS5	7096085	62,30
MC326-10.0E4P050-WJ30TF	WJ30TF	1	●	MS5	7096057	65,70
MC326-10.0E4P100-WJ30TF	WJ30TF	1	●	MS5	7096058	65,70
MC326-10.0E4P150-WJ30TF	WJ30TF	1	●	MS5	7096059	65,70
MC326-10.0E4P200-WJ30TF	WJ30TF	1	●	MS5	7096060	65,70
MC326-10.0E4P300-WJ30TF	WJ30TF	1	●	MS5	7096061	65,70
MC326-10.0W4B-WK40TF	WK40TF	1	●	M30	6719368	120,00
MC326-10.0W4BC-WK40TF	WK40TF	1	●	M30	6719377	132,00
MC326-10.0W4BCJ-WK40TF	WK40TF	1	●	M30	6719393	114,00
MC326-10.0W4B050C-WK40TF	WK40TF	1	●	M30	6579476	145,00
MC326-10.0W4B100C-WK40TF	WK40TF	1	●	M30	6579477	145,00
MC326-10.0W4B150C-WK40TF	WK40TF	1	●	M30	6579478	145,00
MC326-10.0W4B200-WK40TF	WK40TF	1	●	M30	6579356	132,00
MC326-10.0W4B200C-WK40TF	WK40TF	1	●	M30	6579479	145,00
MC326-10.0W4LC-WK40TF	WK40TF	1	●	M30	6719386	154,00
MC326-10.0W4L050C-WK40TF	WK40TF	1	●	M30	6579513	165,00
MC326-10.0W4L100C-WK40TF	WK40TF	1	●	M30	6579514	167,00
MC326-10.0W4L200C-WK40TF	WK40TF	1	●	M30	6579515	170,00
MC326-11.0A4L-WK40TF	WK40TF	1	●	M30	6719352	185,00
MC326-12.0A4B-WK40TF	WK40TF	1	●	M30	6719360	163,00
MC326-12.0A4BC-WK40TF	WK40TF	1	●	M30	6579449	174,00
MC326-12.0A4BCJ-WK40TF	WK40TF	1	●	M30	6579465	155,00
MC326-12.0A4B050C-WK40TF	WK40TF	1	●	M30	6579395	192,00

Bezeichnung / Designation	Sorte / Grade	VE / US		Disc. Gr.	Article No.	EURO Stück / piece
MC326-12.0A4B080C-WK40TF	WK40TF	1	●	M30	6579396	192,00
MC326-12.0A4B100C-WK40TF	WK40TF	1	●	M30	6579397	192,00
MC326-12.0A4B150C-WK40TF	WK40TF	1	●	M30	6579398	192,00
MC326-12.0A4B200C-WK40TF	WK40TF	1	●	M30	6579399	192,00
MC326-12.0A4B250C-WK40TF	WK40TF	1	●	M30	6579400	192,00
MC326-12.0A4B300-WK40TF	WK40TF	1	●	M30	6579333	179,00
MC326-12.0A4B300C-WK40TF	WK40TF	1	●	M30	6579401	192,00
MC326-12.0A4L-WK40TF	WK40TF	1	●	M30	6719353	185,00
MC326-12.0A4LC-WK40TF	WK40TF	1	●	M30	6579458	202,00
MC326-12.0A4L050C-WK40TF	WK40TF	1	●	M30	6579432	225,00
MC326-12.0A4L100C-WK40TF	WK40TF	1	●	M30	6579433	225,00
MC326-12.0A4L300-WK40TF	WK40TF	1	●	M30	6579324	204,00
MC326-12.0A4L300C-WK40TF	WK40TF	1	●	M30	6579431	224,00
MC326-12.0E4P-WJ30TF	WJ30TF	1	●	MS5	7096086	78,00
MC326-12.0E4P050-WJ30TF	WJ30TF	1	●	MS5	7096062	81,70
MC326-12.0E4P100-WJ30TF	WJ30TF	1	●	MS5	7096063	81,70
MC326-12.0E4P150-WJ30TF	WJ30TF	1	●	MS5	7096064	81,70
MC326-12.0E4P200-WJ30TF	WJ30TF	1	●	MS5	7096065	81,70
MC326-12.0E4P300-WJ30TF	WJ30TF	1	●	MS5	7096066	81,70
MC326-12.0E4P400-WJ30TF	WJ30TF	1	●	MS5	7096067	81,70
MC326-12.0W4B-WK40TF	WK40TF	1	●	M30	6719369	163,00
MC326-12.0W4BC-WK40TF	WK40TF	1	●	M30	6719378	179,00
MC326-12.0W4BCJ-WK40TF	WK40TF	1	●	M30	6719394	155,00
MC326-12.0W4B050C-WK40TF	WK40TF	1	●	M30	6579480	198,00
MC326-12.0W4B100C-WK40TF	WK40TF	1	●	M30	6579481	198,00
MC326-12.0W4B150C-WK40TF	WK40TF	1	●	M30	6579482	198,00
MC326-12.0W4B200C-WK40TF	WK40TF	1	●	M30	6579483	198,00
MC326-12.0W4B250C-WK40TF	WK40TF	1	●	M30	6579484	198,00
MC326-12.0W4B300-WK40TF	WK40TF	1	●	M30	6579357	180,00
MC326-12.0W4B300C-WK40TF	WK40TF	1	●	M30	6579485	198,00
MC326-12.0W4LC-WK40TF	WK40TF	1	●	M30	6719387	208,00
MC326-12.0W4L050C-WK40TF	WK40TF	1	●	M30	6579516	224,00
MC326-12.0W4L100C-WK40TF	WK40TF	1	●	M30	6579517	227,00
MC326-14.0A4B-WK40TF	WK40TF	1	●	M30	6719361	198,00
MC326-14.0A4BC-WK40TF	WK40TF	1	●	M30	6579450	211,00
MC326-14.0A4B100C-WK40TF	WK40TF	1	●	M30	6579402	237,00
MC326-14.0A4B150C-WK40TF	WK40TF	1	●	M30	6579403	237,00
MC326-14.0A4B200C-WK40TF	WK40TF	1	●	M30	6579404	237,00
MC326-14.0A4B300-WK40TF	WK40TF	1	●	M30	6579334	217,00
MC326-14.0A4L-WK40TF	WK40TF	1	●	M30	6719354	224,00
MC326-14.0A4LC-WK40TF	WK40TF	1	●	M30	6579459	246,00
MC326-14.0A4L050C-WK40TF	WK40TF	1	●	M30	6579435	271,00
MC326-14.0A4L100C-WK40TF	WK40TF	1	●	M30	6579436	271,00
MC326-14.0A4L300-WK40TF	WK40TF	1	●	M30	6579325	246,00
MC326-14.0A4L300C-WK40TF	WK40TF	1	●	M30	6579434	271,00
MC326-14.0W4B-WK40TF	WK40TF	1	●	M30	6719370	197,00
MC326-14.0W4BC-WK40TF	WK40TF	1	●	M30	6719379	218,00
MC326-14.0W4B100C-WK40TF	WK40TF	1	●	M30	6579486	239,00
MC326-14.0W4B300-WK40TF	WK40TF	1	●	M30	6579358	217,00
MC326-14.0W4B300C-WK40TF	WK40TF	1	●	M30	6579489	239,00
MC326-14.0W4LC-WK40TF	WK40TF	1	●	M30	6719388	253,00
MC326-14.0W4L050C-WK40TF	WK40TF	1	●	M30	6579519	270,00
MC326-16.0A4B-WK40TF	WK40TF	1	●	M30	6719362	245,00
MC326-16.0A4BC-WK40TF	WK40TF	1	●	M30	6579451	264,00
MC326-16.0A4BCJ-WK40TF	WK40TF	1	●	M30	6579467	234,00
MC326-16.0A4B050C-WK40TF	WK40TF	1	●	M30	6579406	290,00
MC326-16.0A4B100C-WK40TF	WK40TF	1	●	M30	6579407	290,00
MC326-16.0A4B200C-WK40TF	WK40TF	1	●	M30	6579408	290,00
MC326-16.0A4B250C-WK40TF	WK40TF	1	●	M30	6579409	290,00
MC326-16.0A4B300-WK40TF	WK40TF	1	●	M30	6579336	270,00
MC326-16.0A4B300C-WK40TF	WK40TF	1	●	M30	6579410	290,00
MC326-16.0A4B400-WK40TF	WK40TF	1	●	M30	6579335	270,00
MC326-16.0A4B400C-WK40TF	WK40TF	1	●	M30	6579411	290,00
MC326-16.0A4L-WK40TF	WK40TF	1	●	M30	6719355	279,00
MC326-16.0A4LC-WK40TF	WK40TF	1	●	M30	6579460	307,00
MC326-16.0A4L050C-WK40TF	WK40TF	1	●	M30	6579438	338,00
MC326-16.0A4L100C-WK40TF	WK40TF	1	●	M30	6579439	338,00
MC326-16.0A4L200C-WK40TF	WK40TF	1	●	M30	6579440	338,00
MC326-16.0A4L300C-WK40TF	WK40TF	1	●	M30	6579441	337,00
MC326-16.0A4L400-WK40TF	WK40TF	1	●	M30	6579326	307,00

Bezeichnung / Designation	Sorte / Grade	VE / US		Disc. Gr.	Article No.	EURO Stück / piece
MC326-16.0A4L400C-WK40TF	WK40TF	1	●	M30	6579437	337,00
MC326-16.0E4P-WJ30TF	WJ30TF	1	●	MS5	7096087	121,00
MC326-16.0E4P050-WJ30TF	WJ30TF	1	●	MS5	7096068	127,00
MC326-16.0E4P100-WJ30TF	WJ30TF	1	●	MS5	7096069	127,00
MC326-16.0E4P150-WJ30TF	WJ30TF	1	●	MS5	7096070	127,00
MC326-16.0E4P200-WJ30TF	WJ30TF	1	●	MS5	7096071	127,00
MC326-16.0E4P300-WJ30TF	WJ30TF	1	●	MS5	7096072	127,00
MC326-16.0E4P400-WJ30TF	WJ30TF	1	●	MS5	7096073	127,00
MC326-16.0W4B-WK40TF	WK40TF	1	●	M30	6719371	246,00
MC326-16.0W4BC-WK40TF	WK40TF	1	●	M30	6719380	270,00
MC326-16.0W4BCJ-WK40TF	WK40TF	1	●	M30	6719396	233,00
MC326-16.0W4B050C-WK40TF	WK40TF	1	●	M30	6579490	296,00
MC326-16.0W4B100C-WK40TF	WK40TF	1	●	M30	6579491	296,00
MC326-16.0W4B200C-WK40TF	WK40TF	1	●	M30	6579492	297,00
MC326-16.0W4B250C-WK40TF	WK40TF	1	●	M30	6579493	297,00
MC326-16.0W4B300-WK40TF	WK40TF	1	●	M30	6579360	270,00
MC326-16.0W4B300C-WK40TF	WK40TF	1	●	M30	6579494	297,00
MC326-16.0W4B400-WK40TF	WK40TF	1	●	M30	6579359	270,00
MC326-16.0W4B400C-WK40TF	WK40TF	1	●	M30	6579495	297,00
MC326-16.0W4LC-WK40TF	WK40TF	1	●	M30	6719389	317,00
MC326-16.0W4L050C-WK40TF	WK40TF	1	●	M30	6579522	337,00
MC326-16.0W4L100C-WK40TF	WK40TF	1	●	M30	6579523	342,00
MC326-16.0W4L200C-WK40TF	WK40TF	1	●	M30	6579524	342,00
MC326-16.0W4L300C-WK40TF	WK40TF	1	●	M30	6579525	342,00
MC326-16.0W4L400C-WK40TF	WK40TF	1	●	M30	6579526	347,00
MC326-18.0A4B-WK40TF	WK40TF	1	●	M30	6719363	284,00
MC326-18.0W4B-WK40TF	WK40TF	1	●	M30	6719372	284,00
MC326-20.0A4B-WK40TF	WK40TF	1	●	M30	6719364	346,00
MC326-20.0A4BC-WK40TF	WK40TF	1	●	M30	6579452	371,00
MC326-20.0A4B050C-WK40TF	WK40TF	1	●	M30	6579412	409,00
MC326-20.0A4B100C-WK40TF	WK40TF	1	●	M30	6579413	409,00
MC326-20.0A4B200C-WK40TF	WK40TF	1	●	M30	6579414	409,00
MC326-20.0A4B250C-WK40TF	WK40TF	1	●	M30	6579415	409,00
MC326-20.0A4B300-WK40TF	WK40TF	1	●	M30	6579338	379,00
MC326-20.0A4B300C-WK40TF	WK40TF	1	●	M30	6579416	409,00
MC326-20.0A4B400C-WK40TF	WK40TF	1	●	M30	6579417	409,00
MC326-20.0A4L-WK40TF	WK40TF	1	●	M30	6719356	393,00
MC326-20.0A4LC-WK40TF	WK40TF	1	●	M30	6579461	431,00
MC326-20.0A4L100C-WK40TF	WK40TF	1	●	M30	6579443	475,00
MC326-20.0A4L200C-WK40TF	WK40TF	1	●	M30	6579444	475,00
MC326-20.0A4L300C-WK40TF	WK40TF	1	●	M30	6579445	475,00
MC326-20.0A4L400-WK40TF	WK40TF	1	●	M30	6579328	432,00
MC326-20.0A4L400C-WK40TF	WK40TF	1	●	M30	6579442	475,00
MC326-20.0E4P-WJ30TF	WJ30TF	1	●	MS5	7096088	144,00
MC326-20.0E4P050-WJ30TF	WJ30TF	1	●	MS5	7096074	151,00
MC326-20.0E4P100-WJ30TF	WJ30TF	1	●	MS5	7096075	152,00
MC326-20.0E4P150-WJ30TF	WJ30TF	1	●	MS5	7096076	151,00
MC326-20.0E4P200-WJ30TF	WJ30TF	1	●	MS5	7096077	152,00
MC326-20.0E4P300-WJ30TF	WJ30TF	1	●	MS5	7096078	152,00
MC326-20.0E4P400-WJ30TF	WJ30TF	1	●	MS5	7096079	152,00
MC326-20.0W4B-WK40TF	WK40TF	1	●	M30	6719373	345,00
MC326-20.0W4BC-WK40TF	WK40TF	1	●	M30	6719381	381,00
MC326-20.0W4B050C-WK40TF	WK40TF	1	●	M30	6579496	417,00
MC326-20.0W4B100C-WK40TF	WK40TF	1	●	M30	6579497	418,00
MC326-20.0W4B200C-WK40TF	WK40TF	1	●	M30	6579498	418,00
MC326-20.0W4B250C-WK40TF	WK40TF	1	●	M30	6579499	418,00
MC326-20.0W4B300-WK40TF	WK40TF	1	●	M30	6579362	380,00
MC326-20.0W4B300C-WK40TF	WK40TF	1	●	M30	6579500	418,00
MC326-20.0W4B400-WK40TF	WK40TF	1	●	M30	6579361	380,00
MC326-20.0W4B400C-WK40TF	WK40TF	1	●	M30	6579501	418,00
MC326-20.0W4LC-WK40TF	WK40TF	1	●	M30	6719390	444,00
MC326-20.0W4L100C-WK40TF	WK40TF	1	●	M30	6579527	475,00
MC326-20.0W4L200C-WK40TF	WK40TF	1	●	M30	6579528	482,00
MC326-20.0W4L300C-WK40TF	WK40TF	1	●	M30	6579529	482,00
MC326-20.0W4L400C-WK40TF	WK40TF	1	●	M30	6579530	489,00
MC326-25.0A5B-WK40TF	WK40TF	1	●	M30	6719365	458,00
MC326-25.0E5P-WJ30TF	WJ30TF	1	●	MS5	7096089	179,00
MC326-25.0E5P100-WJ30TF	WJ30TF	1	●	MS5	7096080	188,00
MC326-25.0E5P150-WJ30TF	WJ30TF	1	●	MS5	7096081	188,00
MC326-25.0E5P200-WJ30TF	WJ30TF	1	●	MS5	7096082	188,00

Bezeichnung / Designation	Sorte / Grade	VE / US		Disc. Gr.	Article No.	EURO Stück / piece
MC326-25.0E5P300-WJ30TF	WJ30TF	1	●	MS5	7096083	188,00
MC326-25.0E5P400-WJ30TF	WJ30TF	1	●	MS5	7096084	188,00
MC326-25.0W5B-WK40TF	WK40TF	1	●	M30	6719374	458,00
MC326.3.18A4LC-WK40TF	WK40TF	1	●	M30	6579305	79,80
MC326.3.18A4L051C-WK40TF	WK40TF	1	●	M30	6579295	88,80
MC326.4.76A4LC-WK40TF	WK40TF	1	●	M30	6579306	79,80
MC326.4.76A4L051C-WK40TF	WK40TF	1	●	M30	6579296	88,80
MC326.6.35A4C-WK40TF	WK40TF	1	●	M30	7809946	61,20
MC326.6.35A4C038-WK40TF	WK40TF	1	●	M30	7810023	67,30
MC326.6.35A4C076-WK40TF	WK40TF	1	●	M30	7810024	67,30
MC326.6.35A4LC-WK40TF	WK40TF	1	●	M30	6579304	79,80
MC326.6.35A4L076C-WK40TF	WK40TF	1	●	M30	7092559	88,80
MC326.6.35A4L102C-WK40TF	WK40TF	1	●	M30	6579294	88,80
MC326.6.35W4D-WK40TF	WK40TF	1	●	M30	6579287	63,90
MC326.6.35W4DCJ-WK40TF	WK40TF	1	●	M30	6579313	60,70
MC326.6.35W4D102-WK40TF	WK40TF	1	●	M30	6579178	70,30
MC326.7.94A4C-WK40TF	WK40TF	1	●	M30	7809947	85,70
MC326.7.94A4C076-WK40TF	WK40TF	1	●	M30	7810025	94,20
MC326.7.94A4D-WK40TF	WK40TF	1	●	M30	7809948	89,50
MC326.7.94A4D076-WK40TF	WK40TF	1	●	M30	7810026	98,80
MC326.7.94A4LC-WK40TF	WK40TF	1	●	M30	6579309	112,00
MC326.7.94A4L076C-WK40TF	WK40TF	1	●	M30	7092600	123,00
MC326.7.94A4L203C-WK40TF	WK40TF	1	●	M30	6579300	123,00
MC326.7.94W4D-WK40TF	WK40TF	1	●	M30	6579290	89,60
MC326.7.94W4DCJ-WK40TF	WK40TF	1	●	M30	6579316	85,10
MC326.7.94W4D203-WK40TF	WK40TF	1	●	M30	6579282	98,60
MC326.9.53A4C-WK40TF	WK40TF	1	●	M30	7809949	110,00
MC326.9.53A4C038-WK40TF	WK40TF	1	●	M30	7810027	121,00
MC326.9.53A4C076-WK40TF	WK40TF	1	●	M30	7810028	121,00
MC326.9.53A4LC-WK40TF	WK40TF	1	●	M30	6579308	142,00
MC326.9.53A4L076C-WK40TF	WK40TF	1	●	M30	7092601	157,00
MC326.9.53A4L152C-WK40TF	WK40TF	1	●	M30	7092602	157,00
MC326.9.53A4L203C-WK40TF	WK40TF	1	●	M30	6579299	157,00
MC326.9.53E4P-WJ30TF	WJ30TF	2	●	MS5	7096052	62,30
MC326.9.53E4P038-WJ30TF	WJ30TF	1	●	MS5	7096042	65,70
MC326.9.53E4P076-WJ30TF	WJ30TF	1	●	MS5	7096043	65,70
MC326.9.53W4D-WK40TF	WK40TF	1	●	M30	6579289	114,00
MC326.9.53W4DCJ-WK40TF	WK40TF	1	●	M30	6579315	108,00
MC326.9.53W4D203-WK40TF	WK40TF	1	●	M30	6579281	125,00
MC326.11.1A4LC-WK40TF	WK40TF	1	●	M30	6579311	192,00
MC326.11.1W4D-WK40TF	WK40TF	1	●	M30	6579292	155,00
MC326.11.1W4D203-WK40TF	WK40TF	1	●	M30	6579285	171,00
MC326.12.7A4C-WK40TF	WK40TF	1	●	M30	7810038	147,00
MC326.12.7A4C038-WK40TF	WK40TF	1	●	M30	7810041	162,00
MC326.12.7A4C076-WK40TF	WK40TF	1	●	M30	7810042	162,00
MC326.12.7A4D-WK40TF	WK40TF	1	●	M30	7810020	155,00
MC326.12.7A4DI-WK40TF	WK40TF	1	●	M30	7810021	170,00
MC326.12.7A4DI038-WK40TF	WK40TF	1	●	M30	7810030	187,00
MC326.12.7A4DI076-WK40TF	WK40TF	1	●	M30	7810032	187,00
MC326.12.7A4DI152-WK40TF	WK40TF	1	●	M30	7810034	187,00
MC326.12.7A4D038-WK40TF	WK40TF	1	●	M30	7810029	170,00
MC326.12.7A4D076-WK40TF	WK40TF	1	●	M30	7810031	170,00
MC326.12.7A4D152-WK40TF	WK40TF	1	●	M30	7810033	170,00
MC326.12.7A4LC-WK40TF	WK40TF	1	●	M30	6579303	192,00
MC326.12.7A4L076C-WK40TF	WK40TF	1	●	M30	7092604	213,00
MC326.12.7A4L152C-WK40TF	WK40TF	1	●	M30	7092605	213,00
MC326.12.7A4L305C-WK40TF	WK40TF	1	●	M30	6579293	213,00
MC326.12.7E4P-WJ30TF	WJ30TF	1	●	MS5	7096053	78,00
MC326.12.7E4P038-WJ30TF	WJ30TF	2	●	MS5	7096044	81,70
MC326.12.7E4P076-WJ30TF	WJ30TF	2	●	MS5	7096045	81,70
MC326.12.7E4P152-WJ30TF	WJ30TF	2	●	MS5	7096046	81,70
MC326.12.7W4D-WK40TF	WK40TF	1	●	M30	6579286	155,00
MC326.12.7W4DCJ-WK40TF	WK40TF	1	●	M30	6579312	147,00
MC326.12.7W4D305-WK40TF	WK40TF	1	●	M30	6579177	171,00
MC326.15.9A4C-WK40TF	WK40TF	1	●	M30	7810039	221,00
MC326.15.9A4C076-WK40TF	WK40TF	1	●	M30	7810043	256,00
MC326.15.9A4C152-WK40TF	WK40TF	1	●	M30	7810044	256,00
MC326.15.9A4D-WK40TF	WK40TF	1	●	M30	7810022	233,00
MC326.15.9A4D076-WK40TF	WK40TF	1	●	M30	7810035	257,00
MC326.15.9A4D152-WK40TF	WK40TF	1	●	M30	7810036	257,00

Bezeichnung / Designation	Sorte / Grade	VE / US		Disc. Gr.	Article No.	EURO Stück / piece
MC326.15.9A4LC-WK40TF	WK40TF	1	●	M30	6579310	292,00
MC326.15.9A4L076C-WK40TF	WK40TF	1	●	M30	7092606	321,00
MC326.15.9A4L152C-WK40TF	WK40TF	1	●	M30	7092607	321,00
MC326.15.9A4L318C-WK40TF	WK40TF	1	●	M30	6579301	321,00
MC326.15.9E4P-WJ30TF	WJ30TF	2	●	MS5	7096054	121,00
MC326.15.9E4P152-WJ30TF	WJ30TF	1	●	MS5	7096047	127,00
MC326.15.9W4D-WK40TF	WK40TF	1	●	M30	6579291	233,00
MC326.15.9W4DCJ-WK40TF	WK40TF	1	●	M30	6579317	222,00
MC326.15.9W4D318-WK40TF	WK40TF	1	●	M30	6579284	257,00
MC326.15.9W4D406-WK40TF	WK40TF	1	●	M30	6579283	257,00
MC326.19.1A4D-WK40TF	WK40TF	1	●	M30	7810040	328,00
MC326.19.1A4D076-WK40TF	WK40TF	1	●	M30	7810045	360,00
MC326.19.1A4D152-WK40TF	WK40TF	1	●	M30	7810037	360,00
MC326.19.1A4LC-WK40TF	WK40TF	1	●	M30	6579307	410,00
MC326.19.1A4L152C-WK40TF	WK40TF	1	●	M30	7092608	451,00
MC326.19.1A4L318C-WK40TF	WK40TF	1	●	M30	6579298	451,00
MC326.19.1A4L406C-WK40TF	WK40TF	1	●	M30	6579297	451,00
MC326.19.1E4P-WJ30TF	WJ30TF	1	●	MS5	7096055	144,00
MC326.19.1E4P152-WJ30TF	WJ30TF	1	●	MS5	7096048	152,00
MC326.19.1E4P318-WJ30TF	WJ30TF	1	●	MS5	7096049	152,00
MC326.19.1W4D-WK40TF	WK40TF	1	●	M30	6579288	328,00
MC326.19.1W4DCJ-WK40TF	WK40TF	1	●	M30	6579314	328,00
MC326.19.1W4D318-WK40TF	WK40TF	1	●	M30	6579280	361,00
MC326.19.1W4D406-WK40TF	WK40TF	1	●	M30	6579179	361,00
MC326.25.4E5P-WJ30TF	WJ30TF	1	●	MS5	7096056	179,00
MC326.25.4E5P152-WJ30TF	WJ30TF	1	●	MS5	7096050	188,00
MC326.25.4E5P318-WJ30TF	WJ30TF	1	●	MS5	7096051	188,00
MC341-06.0A4P-WK40TZ	WK40TZ	1	●	M30	6911707	76,70
MC341-08.0A4P-WK40TZ	WK40TZ	1	●	M30	6911708	109,00
MC341-10.0A4P-WK40TZ	WK40TZ	1	●	M30	6911709	136,00
MC341-12.0A4P-WK40TZ	WK40TZ	1	●	M30	6911720	186,00
MC341-16.0A4P-WK40TZ	WK40TZ	1	●	M30	6911721	280,00
MC341-20.0A4P-WK40TZ	WK40TZ	1	●	M30	6911722	396,00
MC377-02.0A3BC-WK40EA	WK40EA	1	●	M20	7881829	63,50
MC377-02.0A3B020C-WK40EA	WK40EA	1	●	M20	7881887	69,80
MC377-03.0A4BC-WK40EA	WK40EA	1	●	M20	7881880	66,80
MC377-03.0A4B030C-WK40EA	WK40EA	1	●	M20	7881888	73,50
MC377-04.0A4BC-WK40EA	WK40EA	1	●	M20	7881881	66,80
MC377-04.0A4B050C-WK40EA	WK40EA	1	●	M20	7881889	73,50
MC377-05.0A4BC-WK40EA	WK40EA	1	●	M20	7881882	66,80
MC377-05.0A4B050C-WK40EA	WK40EA	1	●	M20	7881890	73,50
MC377-06.0A4BC-WK40EA	WK40EA	1	●	M20	7881883	66,80
MC377-06.0A4B050C-WK40EA	WK40EA	1	●	M20	7881891	73,50
MC377-06.0A4B080C-WK40EA	WK40EA	1	●	M20	7881892	73,50
MC377-06.0A4B100C-WK40EA	WK40EA	1	●	M20	7881893	73,50
MC377-08.0A4BC-WK40EA	WK40EA	1	●	M20	7881884	93,60
MC377-08.0A4B050C-WK40EA	WK40EA	1	●	M20	7881894	103,00
MC377-08.0A4B100C-WK40EA	WK40EA	1	●	M20	7881895	103,00
MC377-10.0A4BC-WK40EA	WK40EA	1	●	M20	7881885	120,00
MC377-10.0A4B050C-WK40EA	WK40EA	1	●	M20	7881896	132,00
MC377-10.0A4B100C-WK40EA	WK40EA	1	●	M20	7881897	132,00
MC377-12.0A4BC-WK40EA	WK40EA	1	●	M20	7881886	160,00
MC377-12.0A4B050C-WK40EA	WK40EA	1	●	M20	7881898	176,00
MC377-12.0A4B100C-WK40EA	WK40EA	1	●	M20	7881899	176,00
MC377-12.0A4B200C-WK40EA	WK40EA	1	●	M20	7881900	176,00
MC377-12.0A4B300C-WK40EA	WK40EA	1	●	M20	7881901	176,00
MC377-16.0A4B100C-WK40EA	WK40EA	1	●	M20	7881902	279,00
MC377-16.0A4B300C-WK40EA	WK40EA	1	●	M20	7881903	279,00
MC377-16.0A4B400C-WK40EA	WK40EA	1	●	M20	7881904	279,00
MC377-16.0W4B300C-WK40EA	WK40EA	1	●	M20	7881909	279,00
MC377-16.0W4B400C-WK40EA	WK40EA	1	●	M20	7881910	279,00
MC377-20.0A4B300C-WK40EA	WK40EA	1	●	M20	7881905	426,00
MC377-20.0A4B400C-WK40EA	WK40EA	1	●	M20	7881906	426,00
MC377-20.0W4B300C-WK40EA	WK40EA	1	●	M20	7881911	426,00
MC377-20.0W4B400C-WK40EA	WK40EA	1	●	M20	7881912	426,00
MC377-25.0A4B300C-WK40EA	WK40EA	1	●	M20	7881907	529,00
MC377-25.0A4B400C-WK40EA	WK40EA	1	●	M20	7881908	529,00
MC377-25.0W4B300C-WK40EA	WK40EA	1	●	M20	7881913	529,00
MC377-25.0W4B400C-WK40EA	WK40EA	1	●	M20	7881914	529,00
MC388-02.0A3B-WB10TG	WB10TG	1	●	M20	7255009	63,00

Bezeichnung / Designation	Sorte / Grade	VE / US		Disc. Gr.	Article No.	EURO Stück / piece
MC388-02.0A3B050-WB10TG	WB10TG	1	●	M20	7254991	69,20
MC388-03.0A3B-WB10TG	WB10TG	1	●	M20	7255010	63,00
MC388-03.0A3B050-WB10TG	WB10TG	1	●	M20	7254992	69,20
MC388-04.0A3B-WB10TG	WB10TG	1	●	M20	7255011	63,00
MC388-04.0A3B050-WB10TG	WB10TG	1	●	M20	7254993	69,20
MC388-04.0A3B100-WB10TG	WB10TG	1	●	M20	7254994	69,20
MC388-05.0A3B-WB10TG	WB10TG	1	●	M20	7255012	63,00
MC388-05.0A3B050-WB10TG	WB10TG	1	●	M20	7254995	69,20
MC388-05.0A3B100-WB10TG	WB10TG	1	●	M20	7254996	69,20
MC388-06.0A4B-WB10TG	WB10TG	1	●	M20	7254983	66,30
MC388-06.0A4L-WB10TG	WB10TG	1	●	M20	7255013	76,20
MC388-06.0A4L050-WB10TG	WB10TG	1	●	M20	7254997	83,80
MC388-06.0A4L100-WB10TG	WB10TG	1	●	M20	7254998	83,80
MC388-06.0W4B-WB10TG	WB10TG	1	●	M20	7254984	66,30
MC388-08.0A4B-WB10TG	WB10TG	1	●	M20	7254985	92,80
MC388-08.0A4L-WB10TG	WB10TG	1	●	M20	7255014	107,00
MC388-08.0A4L050-WB10TG	WB10TG	1	●	M20	7254999	117,00
MC388-08.0A4L100-WB10TG	WB10TG	1	●	M20	7255000	117,00
MC388-08.0A4L200-WB10TG	WB10TG	1	●	M20	7255001	117,00
MC388-08.0W4B-WB10TG	WB10TG	1	●	M20	7254986	92,80
MC388-10.0A4B-WB10TG	WB10TG	1	●	M20	7254987	119,00
MC388-10.0A4L-WB10TG	WB10TG	1	●	M20	7255015	137,00
MC388-10.0A4L050-WB10TG	WB10TG	1	●	M20	7255002	151,00
MC388-10.0A4L100-WB10TG	WB10TG	1	●	M20	7255003	151,00
MC388-10.0A4L200-WB10TG	WB10TG	1	●	M20	7255004	151,00
MC388-10.0W4B-WB10TG	WB10TG	1	●	M20	7254988	119,00
MC388-12.0A4B-WB10TG	WB10TG	1	●	M20	7254989	159,00
MC388-12.0A4L-WB10TG	WB10TG	1	●	M20	7255016	183,00
MC388-12.0A4L050-WB10TG	WB10TG	1	●	M20	7255005	201,00
MC388-12.0A4L100-WB10TG	WB10TG	1	●	M20	7255006	201,00
MC388-12.0A4L200-WB10TG	WB10TG	1	●	M20	7255007	201,00
MC388-12.0A4L300-WB10TG	WB10TG	1	●	M20	7255008	201,00
MC388-12.0AWB-WB10TG	WB10TG	1	●	M20	7254990	159,00
MC388.3.18A3L-WB10TG	WB10TG	1	●	M20	7255017	68,80
MC388.3.18A3L038-WB10TG	WB10TG	1	●	M20	7255022	75,70
MC388.6.35A4L-WB10TG	WB10TG	1	●	M20	7255019	72,40
MC388.9.53A4L-WB10TG	WB10TG	1	●	M20	7255020	113,00
MC388.9.53A4L076-WB10TG	WB10TG	1	●	M20	7255025	125,00
MC388.12.7A4L-WB10TG	WB10TG	1	●	M20	7255021	174,00
MC388.12.7A4L076-WB10TG	WB10TG	1	●	M20	7255026	191,00
MC413-01.0A2L-WJ30TF	WJ30TF	1	●	M20	6959777	90,10
MC413-02.0A2L-WJ30TF	WJ30TF	1	●	M20	6959778	77,60
MC413-03.0A2L-WJ30TF	WJ30TF	1	●	M20	6959779	77,60
MC413-04.0A2L-WJ30TF	WJ30TF	1	●	M20	6959780	77,60
MC413-04.0A2XC-WJ30TF	WJ30TF	1	●	M20	6959781	94,50
MC413-04.0A2XD-WJ30TF	WJ30TF	1	●	M20	6959782	94,50
MC413-04.0A2XE-WJ30TF	WJ30TF	1	●	M20	6959783	94,50
MC413-05.0A2L-WJ30TF	WJ30TF	1	●	M20	6959784	77,60
MC413-05.0A2XC-WJ30TF	WJ30TF	1	●	M20	6959785	94,50
MC413-05.0A2XD-WJ30TF	WJ30TF	1	●	M20	6959786	94,50
MC413-05.0A4L-WJ30TF	WJ30TF	1	●	M20	6959787	86,30
MC413-06.0A2L-WJ30TF	WJ30TF	1	●	M20	6959788	77,60
MC413-06.0A4L-WJ30TF	WJ30TF	1	●	M20	6959789	86,30
MC413-06.0A4XC-WJ30TF	WJ30TF	1	●	M20	6959790	105,00
MC413-06.0A4XD-WJ30TF	WJ30TF	1	●	M20	6959791	105,00
MC413-06.0A4XE-WJ30TF	WJ30TF	1	●	M20	6959792	105,00
MC413-08.0A2L-WJ30TF	WJ30TF	1	●	M20	6959793	109,00
MC413-08.0A4L-WJ30TF	WJ30TF	1	●	M20	6959794	121,00
MC413-08.0A4XC-WJ30TF	WJ30TF	1	●	M20	6959795	147,00
MC413-08.0A4XD-WJ30TF	WJ30TF	1	●	M20	6959796	147,00
MC413-08.0A4XE-WJ30TF	WJ30TF	1	●	M20	6959797	147,00
MC413-10.0A2L-WJ30TF	WJ30TF	1	●	M20	6959798	140,00
MC413-10.0A4L-WJ30TF	WJ30TF	1	●	M20	6959799	155,00
MC413-10.0A4XD-WJ30TF	WJ30TF	1	●	M20	6959800	189,00
MC413-10.0A4XE-WJ30TF	WJ30TF	1	●	M20	6959801	189,00
MC413-12.0A4L-WJ30TF	WJ30TF	1	●	M20	6959802	207,00
MC413-12.0A4XD-WJ30TF	WJ30TF	1	●	M20	6959803	252,00
MC413-16.0A4L-WJ30TF	WJ30TF	1	●	M20	6959804	298,00
MC416-01.0A2B-WJ30TF	WJ30TF	1	●	M20	6959815	71,20
MC416-01.5A2B-WJ30TF	WJ30TF	1	●	M20	6959816	66,30

Bezeichnung / Designation	Sorte / Grade	VE / US		Disc. Gr.	Article No.	EURO Stück / piece
MC416-02.0A2B-WJ30TF	WJ30TF	1	●	M20	6959817	61,40
MC416-02.5A2B-WJ30TF	WJ30TF	1	●	M20	6959818	61,40
MC416-03.0A2B-WJ30TF	WJ30TF	1	●	M20	6959819	61,40
MC416-03.0A4L-WJ30TF	WJ30TF	1	●	M20	6959820	78,40
MC416-03.0W4L-WJ30TF	WJ30TF	1	●	M20	6959821	78,40
MC416-04.0A2B-WJ30TF	WJ30TF	1	●	M20	6959822	61,40
MC416-04.0A4L-WJ30TF	WJ30TF	1	●	M20	6959823	78,40
MC416-04.0W4L-WJ30TF	WJ30TF	1	●	M20	6959824	78,40
MC416-05.0A2B-WJ30TF	WJ30TF	1	●	M20	6959825	61,40
MC416-05.0A4L-WJ30TF	WJ30TF	1	●	M20	6959826	78,40
MC416-05.0W4L-WJ30TF	WJ30TF	1	●	M20	6959827	78,40
MC416-06.0A2B-WJ30TF	WJ30TF	1	●	M20	6959828	61,40
MC416-06.0A4L-WJ30TF	WJ30TF	1	●	M20	6959829	78,40
MC416-06.0W4L-WJ30TF	WJ30TF	1	●	M20	6959830	78,40
MC416-07.0A2B-WJ30TF	WJ30TF	1	●	M20	6959831	73,70
MC416-07.0A4L-WJ30TF	WJ30TF	1	●	M20	6959832	94,10
MC416-08.0A2B-WJ30TF	WJ30TF	1	●	M20	6959833	85,90
MC416-08.0A4L-WJ30TF	WJ30TF	1	●	M20	6959834	110,00
MC416-08.0W4L-WJ30TF	WJ30TF	1	●	M20	6959835	110,00
MC416-09.0A2B-WJ30TF	WJ30TF	1	●	M20	6959836	98,20
MC416-09.0A4L-WJ30TF	WJ30TF	1	●	M20	6959837	125,00
MC416-10.0A2B-WJ30TF	WJ30TF	1	●	M20	6959838	110,00
MC416-10.0A4L-WJ30TF	WJ30TF	1	●	M20	6959839	141,00
MC416-10.0W4L-WJ30TF	WJ30TF	1	●	M20	6959840	141,00
MC416-12.0A2B-WJ30TF	WJ30TF	1	●	M20	6959841	147,00
MC416-12.0A4L-WJ30TF	WJ30TF	1	●	M20	6959842	188,00
MC416-12.0W4L-WJ30TF	WJ30TF	1	●	M20	6959843	188,00
MC416-14.0A2B-WJ30TF	WJ30TF	1	●	M20	6959844	196,00
MC416-16.0A2B-WJ30TF	WJ30TF	1	●	M20	6959845	233,00
MC416-16.0A4L-WJ30TF	WJ30TF	1	●	M20	6959846	298,00
MC416-16.0W4L-WJ30TF	WJ30TF	1	●	M20	6959847	298,00
MC416-18.0A2B-WJ30TF	WJ30TF	1	●	M20	6959848	284,00
MC416-20.0A2B-WJ30TF	WJ30TF	1	●	M20	6959849	356,00
MC416-20.0A4L-WJ30TF	WJ30TF	1	●	M20	6959850	455,00
MC416-20.0W4L-WJ30TF	WJ30TF	1	●	M20	6959851	455,00
MC416.1.59A4D-WJ30TF	WJ30TF	1	●	M20	6959805	70,00
MC416.3.18A4D-WJ30TF	WJ30TF	1	●	M20	6959810	64,80
MC416.4.75A4D-WJ30TF	WJ30TF	1	●	M20	6959811	64,80
MC416.6.35A4D-WJ30TF	WJ30TF	1	●	M20	6959812	64,80
MC416.7.94A4D-WJ30TF	WJ30TF	1	●	M20	6959813	90,70
MC416.9.53A4D-WJ30TF	WJ30TF	1	●	M20	6959814	117,00
MC416.11.1A4D-WJ30TF	WJ30TF	1	●	M20	6959806	130,00
MC416.12.7A4D-WJ30TF	WJ30TF	1	●	M20	6959807	181,00
MC480-00.4A2MC-WB10TG	WB10TG	1	●	M20	7255057	103,00
MC480-00.5A2MC-WB10TG	WB10TG	1	●	M20	7255058	99,70
MC480-00.6A2MC-WB10TG	WB10TG	1	●	M20	7255059	96,70
MC480-00.8A2MC-WB10TG	WB10TG	1	●	M20	7255060	90,70
MC480-01.0A2MB-WB10TG	WB10TG	1	●	M20	7255061	87,70
MC480-01.0A2ME-WB10TG	WB10TG	1	●	M20	7255062	87,70
MC480-01.0A2MG-WB10TG	WB10TG	1	●	M20	7255063	87,70
MC480-01.5A2MC-WB10TG	WB10TG	1	●	M20	7255064	81,60
MC480-01.5A2ME-WB10TG	WB10TG	1	●	M20	7255065	81,60
MC480-01.5A2MG-WB10TG	WB10TG	1	●	M20	7255066	81,60
MC480-02.0A2MB-WB10TG	WB10TG	1	●	M20	7255067	75,60
MC480-02.0A2MC-WB10TG	WB10TG	1	●	M20	7255068	75,60
MC480-02.0A2ME-WB10TG	WB10TG	1	●	M20	7255069	75,60
MC480-02.0A2MG-WB10TG	WB10TG	1	●	M20	7255070	75,60
MC480-03.0A2MC-WB10TG	WB10TG	1	●	M20	7255071	75,60
MC480-03.0A2ME-WB10TG	WB10TG	1	●	M20	7255072	75,60
MC480-03.0A2MG-WB10TG	WB10TG	1	●	M20	7255073	75,60
MC480-04.0A2MC-WB10TG	WB10TG	1	●	M20	7255074	75,60
MC480-04.0A2ME-WB10TG	WB10TG	1	●	M20	7255075	75,60
MC480-05.0A2MD-WB10TG	WB10TG	1	●	M20	7255076	75,60
MC482-01.0A2PV-WB10TG	WB10TG	1	●	M20	7255222	111,00
MC482-01.0A2PW-WB10TG	WB10TG	1	●	M20	7255223	111,00
MC482-01.5A2PV-WB10TG	WB10TG	1	●	M20	7255224	103,00
MC482-01.5A2PW-WB10TG	WB10TG	1	●	M20	7255225	103,00
MC482-02.0A2PV-WB10TG	WB10TG	1	●	M20	7255226	95,60
MC482-02.0A2PW-WB10TG	WB10TG	1	●	M20	7255227	95,60
MC482-03.0A2B-WB10TG	WB10TG	1	●	M20	7255193	83,10

Bezeichnung / Designation	Sorte / Grade	VE / US		Disc. Gr.	Article No.	EURO Stück / piece
MC482-03.0A2LV-WB10TG	WB10TG	1	●	M20	7255230	116,00
MC482-03.0A2PV-WB10TG	WB10TG	1	●	M20	7255228	83,10
MC482-03.0A2PW-WB10TG	WB10TG	1	●	M20	7255229	83,10
MC482-04.0A2B-WB10TG	WB10TG	1	●	M20	7255194	83,10
MC482-04.0A2PV-WB10TG	WB10TG	1	●	M20	7255231	83,10
MC482-04.0A2PW-WB10TG	WB10TG	1	●	M20	7255232	83,10
MC482-05.0A2B-WB10TG	WB10TG	1	●	M20	7255195	83,10
MC482-06.0A2B-WB10TG	WB10TG	1	●	M20	7255196	83,10
MC482-06.0A2L-WB10TG	WB10TG	1	●	M20	7255197	116,00
MC482-06.0A4B-WB10TG	WB10TG	1	●	M20	7255238	92,30
MC482-06.0A4BC-WB10TG	WB10TG	1	●	M20	7255233	117,00
MC482-08.0A2B-WB10TG	WB10TG	1	●	M20	7255198	116,00
MC482-08.0A2L-WB10TG	WB10TG	1	●	M20	7255199	163,00
MC482-08.0A4B-WB10TG	WB10TG	1	●	M20	7255239	129,00
MC482-08.0A4BC-WB10TG	WB10TG	1	●	M20	7255234	164,00
MC482-10.0A2L-WB10TG	WB10TG	1	●	M20	7255220	172,00
MC482-10.0A4B-WB10TG	WB10TG	1	●	M20	7255240	166,00
MC482-10.0A4BC-WB10TG	WB10TG	1	●	M20	7255235	183,00
MC482-12.0A2L-WB10TG	WB10TG	1	●	M20	7255221	229,00
MC482-12.0A4B-WB10TG	WB10TG	1	●	M20	7255241	222,00
MC482-12.0A4BC-WB10TG	WB10TG	1	●	M20	7255236	244,00
MC482-16.0A4B-WB10TG	WB10TG	1	●	M20	7255242	351,00
MC482-16.0A4BC-WB10TG	WB10TG	1	●	M20	7255237	386,00
MC500-06.0A4L-WJ30TF	WJ30TF	1	●	M20	6959852	38,10
MC500-10.0A4L-WJ30TF	WJ30TF	1	●	M20	6959853	68,60
MC500-10.0W4L-WJ30TF	WJ30TF	1	●	M20	6959854	68,60
MC501-06.0A4L-WJ30TF	WJ30TF	1	●	M20	6959855	38,10
MC501-06.0W4L-WJ30TF	WJ30TF	1	●	M20	6959856	38,10
MC501-08.0A5L-WJ30TF	WJ30TF	1	●	M20	6959857	56,00
MC501-08.0W5L-WJ30TF	WJ30TF	1	●	M20	6959858	56,00
MC501-10.0A4L-WJ30TF	WJ30TF	1	●	M20	6959859	68,60
MC501-10.0W4L-WJ30TF	WJ30TF	1	●	M20	6959860	68,60
MC501-12.0A6L-WJ30TF	WJ30TF	1	●	M20	6959861	101,00
MC501-12.0W6L-WJ30TF	WJ30TF	1	●	M20	6959862	101,00
MC502-10.0A4L-WJ30TF	WJ30TF	1	●	M20	6959863	68,60
MC503-04.0A3B050-WJ30TF	WJ30TF	1	●	M20	6959864	66,40
MC503-04.0A3B075-WJ30TF	WJ30TF	1	●	M20	6959865	66,40
MC503-04.0A3B080-WJ30TF	WJ30TF	1	●	M20	6959866	66,40
MC503-04.0A4B100-WJ30TF	WJ30TF	1	●	M20	6959867	97,80
MC503-04.0A4B150-WJ30TF	WJ30TF	1	●	M20	6959868	97,80
MC503-05.0A4B200-WJ30TF	WJ30TF	1	●	M20	6959869	126,00
MC503-05.0A4B250-WJ30TF	WJ30TF	1	●	M20	6959870	126,00
MC503-05.0A4B300-WJ30TF	WJ30TF	1	●	M20	6959871	168,00
MC503-06.0A4B400-WJ30TF	WJ30TF	1	●	M20	6959872	224,00
MC503-06.0A4B500-WJ30TF	WJ30TF	1	●	M20	6959873	279,00
MC503-08.0A4B600-WJ30TF	WJ30TF	1	●	M20	6959874	447,00
MC504-06.0A4LB-WJ30TF	WJ30TF	1	●	M20	6959875	105,00
MC504-08.0A4L-WJ30TF	WJ30TF	1	●	M20	6959876	133,00
MC504-10.0A6L-WJ30TF	WJ30TF	1	●	M20	6959877	189,00
MC504-12.0A6L-WJ30TF	WJ30TF	1	●	M20	6959878	251,00
MC716-01.8W3A-WJ30TF	WJ30TF	1	●	M20	6959879	41,50
MC716-02.0W2A-WJ30TF	WJ30TF	1	●	M20	6959880	37,80
MC716-02.0W3A-WJ30TF	WJ30TF	1	●	M20	6959881	39,90
MC716-02.5W2A-WJ30TF	WJ30TF	1	●	M20	6959882	37,80
MC716-02.5W3A-WJ30TF	WJ30TF	1	●	M20	6959883	39,90
MC716-02.8W2A-WJ30TF	WJ30TF	1	●	M20	6959884	37,80
MC716-02.8W3A-WJ30TF	WJ30TF	1	●	M20	6959885	39,90
MC716-03.0W2A-WJ30TF	WJ30TF	1	●	M20	6959886	37,80
MC716-03.0W3A-WJ30TF	WJ30TF	1	●	M20	6959887	39,90
MC716-03.5W2A-WJ30TF	WJ30TF	1	●	M20	6959888	37,80
MC716-03.5W3A-WJ30TF	WJ30TF	1	●	M20	6959889	39,90
MC716-03.8W2A-WJ30TF	WJ30TF	1	●	M20	6959890	37,80
MC716-03.8W3A-WJ30TF	WJ30TF	1	●	M20	6959891	39,90
MC716-04.0W2A-WJ30TF	WJ30TF	1	●	M20	6959892	37,80
MC716-04.0W3A-WJ30TF	WJ30TF	1	●	M20	6959893	39,90
MC716-04.8W2A-WJ30TF	WJ30TF	1	●	M20	6959894	37,80
MC716-04.8W3A-WJ30TF	WJ30TF	1	●	M20	6959895	39,90
MC716-05.0W2A-WJ30TF	WJ30TF	1	●	M20	6959896	37,80
MC716-05.0W3A-WJ30TF	WJ30TF	1	●	M20	6959897	39,90
MC716-05.75W2A-WJ30TF	WJ30TF	1	●	M20	6959898	37,80

Bezeichnung / Designation	Sorte / Grade	VE / US		Disc. Gr.	Article No.	EURO Stück / piece
MC716-05.75W3A-WJ30TF	WJ30TF	1	●	M20	6959899	39,90
MC716-06.0W2A-WJ30TF	WJ30TF	1	●	M20	6959900	37,80
MC716-06.0W3A-WJ30TF	WJ30TF	1	●	M20	6959901	39,90
MC716-06.75W3A-WJ30TF	WJ30TF	1	●	M20	6959902	47,90
MC716-07.0W3A-WJ30TF	WJ30TF	1	●	M20	6959903	47,90
MC716-07.75W2A-WJ30TF	WJ30TF	1	●	M20	6959904	52,90
MC716-07.75W3A-WJ30TF	WJ30TF	1	●	M20	6959905	55,80
MC716-08.0W2A-WJ30TF	WJ30TF	1	●	M20	6959906	52,90
MC716-08.0W3A-WJ30TF	WJ30TF	1	●	M20	6959907	55,80
MC716-09.0W2A-WJ30TF	WJ30TF	1	●	M20	6959908	60,40
MC716-09.0W3A-WJ30TF	WJ30TF	1	●	M20	6959909	63,80
MC716-09.7W2A-WJ30TF	WJ30TF	1	●	M20	6959910	68,00
MC716-09.7W3A-WJ30TF	WJ30TF	1	●	M20	6959911	71,80
MC716-10.0W2A-WJ30TF	WJ30TF	1	●	M20	6959912	68,00
MC716-10.0W3A-WJ30TF	WJ30TF	1	●	M20	6959913	71,80
MC716-11.7W2A-WJ30TF	WJ30TF	1	●	M20	6959914	90,70
MC716-11.7W3A-WJ30TF	WJ30TF	1	●	M20	6959915	95,70
MC716-12.0W2A-WJ30TF	WJ30TF	1	●	M20	6959916	90,70
MC716-12.0W3A-WJ30TF	WJ30TF	1	●	M20	6959917	95,70
MC716-13.7W2A-WJ30TF	WJ30TF	1	●	M20	6959918	121,00
MC716-13.7W3A-WJ30TF	WJ30TF	1	●	M20	6959919	128,00
MC716-14.0W3A-WJ30TF	WJ30TF	1	●	M20	6959920	128,00
MC716-15.7W3A-WJ30TF	WJ30TF	1	●	M20	6959922	151,00
MC716-16.0W2A-WJ30TF	WJ30TF	1	●	M20	6959923	144,00
MC716-16.0W3A-WJ30TF	WJ30TF	1	●	M20	6959924	151,00
MC716-20.0W3A-WJ30TF	WJ30TF	1	●	M20	6959927	231,00
MC726-02.8A3A008J-WK40TF	WK40TF	1	●	M30	6579339	66,10
MC726-02.8W3A008J-WK40TF	WK40TF	1	●	M30	6579363	66,10
MC726-03.0A3A008J-WK40TF	WK40TF	1	●	M30	6579340	60,10
MC726-03.0W3A008J-WK40TF	WK40TF	1	●	M30	6579364	60,10
MC726-03.8A3A008J-WK40TF	WK40TF	1	●	M30	6579341	60,10
MC726-03.8W3A008J-WK40TF	WK40TF	1	●	M30	6579365	60,10
MC726-04.0A3A008J-WK40TF	WK40TF	1	●	M30	6579342	60,10
MC726-04.0W3A008J-WK40TF	WK40TF	1	●	M30	6579366	60,10
MC726-04.8A3A016J-WK40TF	WK40TF	1	●	M30	6579343	60,10
MC726-04.8W3A016J-WK40TF	WK40TF	1	●	M30	6579367	60,10
MC726-05.0A3A016J-WK40TF	WK40TF	1	●	M30	6579344	60,10
MC726-05.0W3A016J-WK40TF	WK40TF	1	●	M30	6579368	60,10
MC726-05.8A4A016J-WK40TF	WK40TF	1	●	M30	6579345	60,10
MC726-05.8W4A016J-WK40TF	WK40TF	1	●	M30	6579369	60,10
MC726-06.0A4A016J-WK40TF	WK40TF	1	●	M30	6579346	60,10
MC726-06.0W4A016J-WK40TF	WK40TF	1	●	M30	6579370	60,10
MC726-07.8A4A016J-WK40TF	WK40TF	1	●	M30	6579347	84,60
MC726-07.8W4A016J-WK40TF	WK40TF	1	●	M30	6579371	84,60
MC726-08.0A4A016J-WK40TF	WK40TF	1	●	M30	6579348	84,60
MC726-08.0W4A016J-WK40TF	WK40TF	1	●	M30	6579372	84,60
MC726-09.7A4A025J-WK40TF	WK40TF	1	●	M30	6579349	107,00
MC726-09.7W4A025J-WK40TF	WK40TF	1	●	M30	6579373	107,00
MC726-10.0A4A025J-WK40TF	WK40TF	1	●	M30	6579350	107,00
MC726-10.0W4A025J-WK40TF	WK40TF	1	●	M30	6579374	107,00
MC726-12.0A4A025J-WK40TF	WK40TF	1	●	M30	6579351	145,00
MC726-12.0W4A025J-WK40TF	WK40TF	1	●	M30	6579375	145,00
MC726-14.0A4A025J-WK40TF	WK40TF	1	●	M30	6579352	174,00
MC726-14.0W4A025J-WK40TF	WK40TF	1	●	M30	6579376	174,00
MC726-16.0A4A025J-WK40TF	WK40TF	1	●	M30	6579353	217,00
MC726-16.0W4A025J-WK40TF	WK40TF	1	●	M30	6579377	217,00
MD025-06.0A5B050C-WJ30RA	WJ30RA	1	●	M30	7745662	106,00
MD025-06.0A5B050C-WJ30RD	WJ30RD	1	●	M30	7745636	106,00
MD025-08.0A5B100C-WJ30RA	WJ30RA	1	●	M30	7745663	149,00
MD025-08.0A5B100C-WJ30RD	WJ30RD	1	●	M30	7745637	149,00
MD025-10.0A5B150C-WJ30RA	WJ30RA	1	●	M30	7745664	191,00
MD025-10.0A5B150C-WJ30RD	WJ30RD	1	●	M30	7745638	191,00
MD025-10.0E5P150-WJ30RA	WJ30RA	1	●	MS5	7745702	85,60
MD025-10.0E5P150-WJ30RD	WJ30RD	1	●	MS5	7745692	85,60
MD025-12.0A6B150C-WJ30RA	WJ30RA	1	●	M30	7745665	267,00
MD025-12.0A6B150C-WJ30RD	WJ30RD	1	●	M30	7745639	267,00
MD025-12.0E6P150-WJ30RA	WJ30RA	1	●	MS5	7745703	112,00
MD025-12.0E6P150-WJ30RD	WJ30RD	1	●	MS5	7745693	112,00
MD025-16.0A6B200C-WJ30RA	WJ30RA	1	●	M30	7745666	401,00
MD025-16.0A6B200C-WJ30RD	WJ30RD	1	●	M30	7745640	401,00

Bezeichnung / Designation	Sorte / Grade	VE / US		Disc. Gr.	Article No.	EURO Stück / piece
MD025-16.0E6P200-WJ30RA	WJ30RA	1	●	MS5	7745704	174,00
MD025-16.0E6P200-WJ30RD	WJ30RD	1	●	MS5	7745694	174,00
MD025-20.0E6P200-WJ30RA	WJ30RA	1	●	MS5	7745705	207,00
MD025-20.0E6P200-WJ30RD	WJ30RD	1	●	MS5	7745695	207,00
MD025-25.0E6P300-WJ30RA	WJ30RA	1	●	MS5	7745706	258,00
MD025-25.0E6P300-WJ30RD	WJ30RD	1	●	MS5	7745696	258,00
MD025.6.35A5D051C-WJ30RA	WJ30RA	1	●	M30	7745667	101,00
MD025.6.35A5D051C-WJ30RD	WJ30RD	1	●	M30	7745641	101,00
MD025.7.94A5D102C-WJ30RA	WJ30RA	1	●	M30	7745668	141,00
MD025.7.94A5D102C-WJ30RD	WJ30RD	1	●	M30	7745642	141,00
MD025.9.53A5D152C-WJ30RA	WJ30RA	1	●	M30	7745669	181,00
MD025.9.53A5D152C-WJ30RD	WJ30RD	1	●	M30	7745643	181,00
MD025.9.53E5P152-WJ30RA	WJ30RA	1	●	MS5	7745707	85,60
MD025.9.53E5P152-WJ30RD	WJ30RD	1	●	MS5	7745697	85,60
MD025.12.7A6D152C-WJ30RA	WJ30RA	1	●	M30	7745680	253,00
MD025.12.7A6D152C-WJ30RD	WJ30RD	1	●	M30	7745644	253,00
MD025.12.7E6P152-WJ30RA	WJ30RA	1	●	MS5	7745708	112,00
MD025.12.7E6P152-WJ30RD	WJ30RD	1	●	MS5	7745698	112,00
MD025.15.9A6D203C-WJ30RA	WJ30RA	1	●	M30	7745681	381,00
MD025.15.9A6D203C-WJ30RD	WJ30RD	1	●	M30	7745645	381,00
MD025.15.9E6P203-WJ30RA	WJ30RA	1	●	MS5	7745709	174,00
MD025.15.9E6P203-WJ30RD	WJ30RD	1	●	MS5	7745699	174,00
MD025.19.1E6P203-WJ30RA	WJ30RA	1	●	MS5	7745710	207,00
MD025.19.1E6P203-WJ30RD	WJ30RD	1	●	MS5	7745700	207,00
MD025.25.4E6P318-WJ30RA	WJ30RA	1	●	MS5	7745711	258,00
MD025.25.4E6P318-WJ30RD	WJ30RD	1	●	MS5	7745701	258,00
MD101		1	●	095	5008480	2,46
MD102		1	●	095	5008481	3,21
MD103		1	●	095	5008482	3,26
MD128-06.0A6LJ-WJ30RA	WJ30RA	1	●	M30	7873165	87,30
MD128-06.0A6LJ-WJ30RD	WJ30RD	1	●	M30	7873226	87,30
MD128-06.0A6L050J-WJ30RA	WJ30RA	1	●	M30	7873212	96,10
MD128-06.0A6L050J-WJ30RD	WJ30RD	1	●	M30	7873233	96,10
MD128-08.0A6LJ-WJ30RA	WJ30RA	1	●	M30	7873166	122,00
MD128-08.0A6LJ-WJ30RD	WJ30RD	1	●	M30	7873227	122,00
MD128-08.0A6L050J-WJ30RA	WJ30RA	1	●	M30	7873213	134,00
MD128-08.0A6L050J-WJ30RD	WJ30RD	1	●	M30	7873234	134,00
MD128-10.0A6LJ-WJ30RA	WJ30RA	1	●	M30	7873167	157,00
MD128-10.0A6LJ-WJ30RD	WJ30RD	1	●	M30	7873228	157,00
MD128-10.0A6L050J-WJ30RA	WJ30RA	1	●	M30	7873214	173,00
MD128-10.0A6L050J-WJ30RD	WJ30RD	1	●	M30	7873235	173,00
MD128-10.0A6L100J-WJ30RA	WJ30RA	1	●	M30	7873215	173,00
MD128-10.0A6L100J-WJ30RD	WJ30RD	1	●	M30	7873236	173,00
MD128-10.0E6X-WJ30RA	WJ30RA	1	●	MS5	7873253	94,40
MD128-10.0E6X-WJ30RD	WJ30RD	1	●	MS5	7873290	94,40
MD128-10.0E6X050-WJ30RA	WJ30RA	1	●	MS5	7873258	104,00
MD128-10.0E6X050-WJ30RD	WJ30RD	1	●	MS5	7873295	104,00
MD128-10.0E6X100-WJ30RA	WJ30RA	1	●	MS5	7873259	104,00
MD128-10.0E6X100-WJ30RD	WJ30RD	1	●	MS5	7873296	104,00
MD128-12.0A6LJ-WJ30RA	WJ30RA	1	●	M30	7873168	210,00
MD128-12.0A6LJ-WJ30RD	WJ30RD	1	●	M30	7873229	210,00
MD128-12.0A6L050J-WJ30RA	WJ30RA	1	●	M30	7873216	231,00
MD128-12.0A6L050J-WJ30RD	WJ30RD	1	●	M30	7873237	231,00
MD128-12.0A6L100J-WJ30RA	WJ30RA	1	●	M30	7873217	231,00
MD128-12.0A6L100J-WJ30RD	WJ30RD	1	●	M30	7873238	231,00
MD128-12.0A6L200J-WJ30RA	WJ30RA	1	●	M30	7873218	231,00
MD128-12.0A6L200J-WJ30RD	WJ30RD	1	●	M30	7873239	231,00
MD128-12.0E6X-WJ30RA	WJ30RA	1	●	MS5	7873254	118,00
MD128-12.0E6X-WJ30RD	WJ30RD	1	●	MS5	7873291	118,00
MD128-12.0E6X050-WJ30RA	WJ30RA	1	●	MS5	7873280	130,00
MD128-12.0E6X050-WJ30RD	WJ30RD	1	●	MS5	7873297	130,00
MD128-12.0E6X100-WJ30RA	WJ30RA	1	●	MS5	7873281	130,00
MD128-12.0E6X100-WJ30RD	WJ30RD	1	●	MS5	7873298	130,00
MD128-12.0E6X200-WJ30RA	WJ30RA	1	●	MS5	7873282	130,00
MD128-12.0E6X200-WJ30RD	WJ30RD	1	●	MS5	7873299	130,00
MD128-16.0A6LJ-WJ30RA	WJ30RA	1	●	M30	7873169	332,00
MD128-16.0A6LJ-WJ30RD	WJ30RD	1	●	M30	7873230	332,00
MD128-16.0A6L050J-WJ30RA	WJ30RA	1	●	M30	7873219	365,00
MD128-16.0A6L050J-WJ30RD	WJ30RD	1	●	M30	7873240	365,00
MD128-16.0A6L100J-WJ30RA	WJ30RA	1	●	M30	7873220	365,00

Bezeichnung / Designation	Sorte / Grade	VE / US		Disc. Gr.	Article No.	EURO Stück / piece
MD128-16.0A6L100J-WJ30RD	WJ30RD	1	●	M30	7873241	365,00
MD128-16.0A6L200J-WJ30RA	WJ30RA	1	●	M30	7873221	365,00
MD128-16.0A6L200J-WJ30RD	WJ30RD	1	●	M30	7873242	365,00
MD128-16.0E6X-WJ30RA	WJ30RA	1	●	MS5	7873255	183,00
MD128-16.0E6X-WJ30RD	WJ30RD	1	●	MS5	7873292	183,00
MD128-16.0E6X050-WJ30RA	WJ30RA	1	●	MS5	7873283	201,00
MD128-16.0E6X050-WJ30RD	WJ30RD	1	●	MS5	7873300	201,00
MD128-16.0E6X100-WJ30RA	WJ30RA	1	●	MS5	7873284	201,00
MD128-16.0E6X100-WJ30RD	WJ30RD	1	●	MS5	7873301	201,00
MD128-16.0E6X200-WJ30RA	WJ30RA	1	●	MS5	7873285	201,00
MD128-16.0E6X200-WJ30RD	WJ30RD	1	●	MS5	7873302	201,00
MD128-20.0A8LJ-WJ30RA	WJ30RA	1	●	M30	7873210	553,00
MD128-20.0A8LJ-WJ30RD	WJ30RD	1	●	M30	7873231	553,00
MD128-20.0A8L100J-WJ30RA	WJ30RA	1	●	M30	7873222	608,00
MD128-20.0A8L100J-WJ30RD	WJ30RD	1	●	M30	7873243	608,00
MD128-20.0A8L400J-WJ30RA	WJ30RA	1	●	M30	7873223	608,00
MD128-20.0A8L400J-WJ30RD	WJ30RD	1	●	M30	7873244	608,00
MD128-20.0E8X-WJ30RA	WJ30RA	1	●	MS5	7873256	238,00
MD128-20.0E8X-WJ30RD	WJ30RD	1	●	MS5	7873293	238,00
MD128-20.0E8X100-WJ30RA	WJ30RA	1	●	MS5	7873286	262,00
MD128-20.0E8X100-WJ30RD	WJ30RD	1	●	MS5	7873303	262,00
MD128-20.0E8X400-WJ30RA	WJ30RA	1	●	MS5	7873287	262,00
MD128-20.0E8X400-WJ30RD	WJ30RD	1	●	MS5	7873304	262,00
MD128-25.0A8LJ-WJ30RA	WJ30RA	1	●	M30	7873211	686,00
MD128-25.0A8LJ-WJ30RD	WJ30RD	1	●	M30	7873232	686,00
MD128-25.0A8L100J-WJ30RA	WJ30RA	1	●	M30	7873224	755,00
MD128-25.0A8L100J-WJ30RD	WJ30RD	1	●	M30	7873245	755,00
MD128-25.0A8L400J-WJ30RA	WJ30RA	1	●	M30	7873225	755,00
MD128-25.0A8L400J-WJ30RD	WJ30RD	1	●	M30	7873246	755,00
MD128-25.0E8X-WJ30RA	WJ30RA	1	●	MS5	7873257	296,00
MD128-25.0E8X-WJ30RD	WJ30RD	1	●	MS5	7873294	296,00
MD128-25.0E8X100-WJ30RA	WJ30RA	1	●	MS5	7873288	326,00
MD128-25.0E8X100-WJ30RD	WJ30RD	1	●	MS5	7873305	326,00
MD128-25.0E8X400-WJ30RA	WJ30RA	1	●	MS5	7873289	326,00
MD128-25.0E8X400-WJ30RD	WJ30RD	1	●	MS5	7873306	326,00
MD133-06.0W5L030D-WJ30RA	WJ30RA	1	●	M30	7146382	92,40
MD133-06.0W5L030D-WJ30RD	WJ30RD	1	●	M30	7146356	92,40
MD133-06.0W5L030J-WJ30RA	WJ30RA	1	●	M30	7137242	84,00
MD133-06.0W5L030J-WJ30RD	WJ30RD	1	●	M30	7137213	84,00
MD133-06.0W5L030K-WJ30RA	WJ30RA	1	●	M30	7496816	84,00
MD133-06.0W5L030K-WJ30RD	WJ30RD	1	●	M30	7496810	84,00
MD133-06.0W5X030L-WJ30RA	WJ30RA	1	●	M30	7137254	102,00
MD133-06.0W5X030L-WJ30RD	WJ30RD	1	●	M30	7137236	102,00
MD133-08.0W5L040D-WJ30RA	WJ30RA	1	●	M30	7146383	129,00
MD133-08.0W5L040D-WJ30RD	WJ30RD	1	●	M30	7146357	129,00
MD133-08.0W5L040J-WJ30RA	WJ30RA	1	●	M30	7137243	118,00
MD133-08.0W5L040J-WJ30RD	WJ30RD	1	●	M30	7137214	118,00
MD133-08.0W5L040K-WJ30RA	WJ30RA	1	●	M30	7496817	118,00
MD133-08.0W5L040K-WJ30RD	WJ30RD	1	●	M30	7496811	118,00
MD133-08.0W5X040L-WJ30RA	WJ30RA	1	●	M30	7137255	143,00
MD133-08.0W5X040L-WJ30RD	WJ30RD	1	●	M30	7137237	143,00
MD133-10.0W5L050D-WJ30RA	WJ30RA	1	●	M30	7146384	166,00
MD133-10.0W5L050D-WJ30RD	WJ30RD	1	●	M30	7146358	166,00
MD133-10.0W5L050J-WJ30RA	WJ30RA	1	●	M30	7137244	151,00
MD133-10.0W5L050J-WJ30RD	WJ30RD	1	●	M30	7137215	151,00
MD133-10.0W5L050K-WJ30RA	WJ30RA	1	●	M30	7496818	151,00
MD133-10.0W5L050K-WJ30RD	WJ30RD	1	●	M30	7496812	151,00
MD133-10.0W5X050L-WJ30RA	WJ30RA	1	●	M30	7137256	184,00
MD133-10.0W5X050L-WJ30RD	WJ30RD	1	●	M30	7137238	184,00
MD133-12.0W5L060D-WJ30RA	WJ30RA	1	●	M30	7146385	222,00
MD133-12.0W5L060D-WJ30RD	WJ30RD	1	●	M30	7146359	222,00
MD133-12.0W5L060J-WJ30RA	WJ30RA	1	●	M30	7137245	202,00
MD133-12.0W5L060J-WJ30RD	WJ30RD	1	●	M30	7137216	202,00
MD133-12.0W5L060K-WJ30RA	WJ30RA	1	●	M30	7496819	202,00
MD133-12.0W5L060K-WJ30RD	WJ30RD	1	●	M30	7496813	202,00
MD133-12.0W5X060L-WJ30RA	WJ30RA	1	●	M30	7137257	245,00
MD133-12.0W5X060L-WJ30RD	WJ30RD	1	●	M30	7137239	245,00
MD133-16.0W6L080D-WJ30RA	WJ30RA	1	●	M30	7146386	368,00
MD133-16.0W6L080D-WJ30RD	WJ30RD	1	●	M30	7146380	368,00
MD133-16.0W6L080J-WJ30RA	WJ30RA	1	●	M30	7137246	334,00

Bezeichnung / Designation	Sorte / Grade	VE / US		Disc. Gr.	Article No.	EURO Stück / piece
MD133-16.0W6L080J-WJ30RD	WJ30RD	1	●	M30	7137217	334,00
MD133-16.0W6L080K-WJ30RA	WJ30RA	1	●	M30	7496820	334,00
MD133-16.0W6L080K-WJ30RD	WJ30RD	1	●	M30	7496814	334,00
MD133-16.0W6X080L-WJ30RA	WJ30RA	1	●	M30	7137258	407,00
MD133-16.0W6X080L-WJ30RD	WJ30RD	1	●	M30	7137240	407,00
MD133-20.0W6L100D-WJ30RA	WJ30RA	1	●	M30	7146387	519,00
MD133-20.0W6L100D-WJ30RD	WJ30RD	1	●	M30	7146381	519,00
MD133-20.0W6L100J-WJ30RA	WJ30RA	1	●	M30	7137247	472,00
MD133-20.0W6L100J-WJ30RD	WJ30RD	1	●	M30	7137218	472,00
MD133-20.0W6L100K-WJ30RA	WJ30RA	1	●	M30	7496821	472,00
MD133-20.0W6L100K-WJ30RD	WJ30RD	1	●	M30	7496815	472,00
MD133-20.0W6X100L-WJ30RA	WJ30RA	1	●	M30	7137259	575,00
MD133-20.0W6X100L-WJ30RD	WJ30RD	1	●	M30	7137241	575,00
MD133.6.35W5L038D-WJ30RA	WJ30RA	1	●	M30	7270263	87,80
MD133.6.35W5L038D-WJ30RD	WJ30RD	1	●	M30	7270229	87,80
MD133.6.35W5X038L-WJ30RA	WJ30RA	1	●	M30	7270271	97,20
MD133.6.35W5X038L-WJ30RD	WJ30RD	1	●	M30	7270267	97,20
MD133.9.53W5L038D-WJ30RA	WJ30RA	1	●	M30	7270264	158,00
MD133.9.53W5L038D-WJ30RD	WJ30RD	1	●	M30	7270260	158,00
MD133.9.53W5X038L-WJ30RA	WJ30RA	1	●	M30	7270272	175,00
MD133.9.53W5X038L-WJ30RD	WJ30RD	1	●	M30	7270268	175,00
MD133.12.7W5L076D-WJ30RA	WJ30RA	1	●	M30	7270265	211,00
MD133.12.7W5L076D-WJ30RD	WJ30RD	1	●	M30	7270261	211,00
MD133.12.7W5X076L-WJ30RA	WJ30RA	1	●	M30	7270273	233,00
MD133.12.7W5X076L-WJ30RD	WJ30RD	1	●	M30	7270269	233,00
MD133.15.9W6L076D-WJ30RA	WJ30RA	1	●	M30	7270266	350,00
MD133.15.9W6L076D-WJ30RD	WJ30RD	1	●	M30	7270262	350,00
MD133.15.9W6X076L-WJ30RA	WJ30RA	1	●	M30	7270274	387,00
MD133.15.9W6X076L-WJ30RD	WJ30RD	1	●	M30	7270270	387,00
MD133.19.1W6L076D-WJ30RA	WJ30RA	1	●	M30	7320128	493,00
MD133.19.1W6L076D-WJ30RD	WJ30RD	1	●	M30	7320127	493,00
MD133.19.1W6X076L-WJ30RA	WJ30RA	1	●	M30	7320220	546,00
MD133.19.1W6X076L-WJ30RD	WJ30RD	1	●	M30	7320129	546,00
MD173.6.35A7X038L-WJ30EN	WJ30EN	1	●	M30	8203543	99,60
MD173.9.53A7L038J-WJ30EN	WJ30EN	1	●	M30	8203544	131,00
MD173.9.53A7L076J-WJ30EN	WJ30EN	1	●	M30	8203545	131,00
MD173.9.53A7L152J-WJ30EN	WJ30EN	1	●	M30	8203546	131,00
MD173.12.7A7D038I-WJ30EN	WJ30EN	1	●	M30	8203498	171,00
MD173.12.7A7D076I-WJ30EN	WJ30EN	1	●	M30	8203499	171,00
MD173.12.7A7D152I-WJ30EN	WJ30EN	1	●	M30	8203530	171,00
MD173.12.7A7L076K-WJ30EN	WJ30EN	1	●	M30	8203547	196,00
MD173.12.7A7L152K-WJ30EN	WJ30EN	1	●	M30	8203548	196,00
MD173.15.9A7DI-WJ30EN	WJ30EN	1	●	M30	8203533	256,00
MD173.15.9A7D038I-WJ30EN	WJ30EN	1	●	M30	8203531	256,00
MD173.15.9A7D076I-WJ30EN	WJ30EN	1	●	M30	8203532	256,00
MD173.15.9A7LJ-WJ30EN	WJ30EN	1	●	M30	8203552	294,00
MD173.15.9A7L038J-WJ30EN	WJ30EN	1	●	M30	8203549	294,00
MD173.15.9A7L076J-WJ30EN	WJ30EN	1	●	M30	8203550	294,00
MD173.15.9A7L152J-WJ30EN	WJ30EN	1	●	M30	8203551	294,00
MD173.19.1A7D076-WJ30EN	WJ30EN	1	●	M30	8203538	356,00
MD173.19.1A7D152-WJ30EN	WJ30EN	1	●	M30	8203534	356,00
MD173.19.1A7D305-WJ30EN	WJ30EN	1	●	M30	8203535	356,00
MD173.19.1A7L076J-WJ30EN	WJ30EN	1	●	M30	8203536	409,00
MD173.19.1A7L152J-WJ30EN	WJ30EN	1	●	M30	8203537	409,00
MD173.19.1A7L305J-WJ30EN	WJ30EN	1	●	M30	8203539	409,00
MD173.19.1A7XK-WJ30EN	WJ30EN	1	●	M30	8203554	498,00
MD173.19.1A7X076K-WJ30EN	WJ30EN	1	●	M30	8203553	498,00
MD173.19.1A7X152K-WJ30EN	WJ30EN	1	●	M30	8203555	498,00
MD173.19.1A7X305K-WJ30EN	WJ30EN	1	●	M30	8203556	498,00
MD173.25.4A7D038I-WJ30EN	WJ30EN	1	●	M30	8203542	512,00
MD173.25.4A7D152I-WJ30EN	WJ30EN	1	●	M30	8203541	512,00
MD173.25.4A7D305I-WJ30EN	WJ30EN	1	●	M30	8203540	512,00
MD173.25.4A7LJ-WJ30EN	WJ30EN	1	●	M30	8203557	589,00
MD177-06.0A7B030-WJ30EN	WJ30EN	1	●	M30	8203353	66,20
MD177-06.0A7L030K-WJ30EN	WJ30EN	1	●	M30	8203354	76,20
MD177-08.0A7B040-WJ30EN	WJ30EN	1	●	M30	8203355	92,70
MD177-08.0A7L040K-WJ30EN	WJ30EN	1	●	M30	8203356	107,00
MD177-10.0A7B050-WJ30EN	WJ30EN	1	●	M30	8203357	119,00
MD177-10.0A7L050K-WJ30EN	WJ30EN	1	●	M30	8203358	137,00
MD177-12.0A7B060-WJ30EN	WJ30EN	1	●	M30	8203359	159,00

Bezeichnung / Designation	Sorte / Grade	VE / US		Disc. Gr.	Article No.	EURO Stück / piece
MD177-12.0A7L060K-WJ30EN	WJ30EN	1	●	M30	8203370	183,00
MD177-16.0A7B080-WJ30EN	WJ30EN	1	●	M30	8203371	252,00
MD177-16.0A7L080K-WJ30EN	WJ30EN	1	●	M30	8203372	289,00
MD177-20.0A7B100-WJ30EN	WJ30EN	1	●	M30	8203373	384,00
MD177-20.0A7L100K-WJ30EN	WJ30EN	1	●	M30	8203374	442,00
MD177-25.0A7B125-WJ30EN	WJ30EN	1	●	M30	8203375	477,00
MD177-25.0A7L125K-WJ30EN	WJ30EN	1	●	M30	8203376	548,00
MD177.4.76A7LK-WJ30EN	WJ30EN	1	●	M30	8203471	61,50
MD177.4.76A7L038K-WJ30EN	WJ30EN	1	●	M30	8203470	61,50
MD177.6.35A7D-WJ30EN	WJ30EN	1	●	M30	8203378	53,50
MD177.6.35A7DJ-WJ30EN	WJ30EN	1	●	M30	8203420	53,50
MD177.6.35A7D038-WJ30EN	WJ30EN	1	●	M30	8203421	53,50
MD177.6.35A7D076-WJ30EN	WJ30EN	1	●	M30	8203422	53,50
MD177.6.35A7D076J-WJ30EN	WJ30EN	1	●	M30	8203379	53,50
MD177.6.35A7XL-WJ30EN	WJ30EN	1	●	M30	8203474	74,90
MD177.6.35A7X038L-WJ30EN	WJ30EN	1	●	M30	8203472	74,90
MD177.6.35A7X076L-WJ30EN	WJ30EN	1	●	M30	8203473	74,90
MD177.9.53A7D-WJ30EN	WJ30EN	1	●	M30	8203430	85,60
MD177.9.53A7D038-WJ30EN	WJ30EN	1	●	M30	8203427	85,60
MD177.9.53A7D076-WJ30EN	WJ30EN	1	●	M30	8203428	85,60
MD177.9.53A7D152-WJ30EN	WJ30EN	1	●	M30	8203429	85,60
MD177.9.53A7LJ-WJ30EN	WJ30EN	1	●	M30	8203478	98,40
MD177.9.53A7L038J-WJ30EN	WJ30EN	1	●	M30	8203475	98,40
MD177.9.53A7L076J-WJ30EN	WJ30EN	1	●	M30	8203476	98,40
MD177.9.53A7L152J-WJ30EN	WJ30EN	1	●	M30	8203477	98,40
MD177.9.53A7S-WJ30EN	WJ30EN	1	●	M30	8203426	64,20
MD177.9.53A7S038-WJ30EN	WJ30EN	1	●	M30	8203423	64,20
MD177.9.53A7S076-WJ30EN	WJ30EN	1	●	M30	8203424	64,20
MD177.9.53A7S152-WJ30EN	WJ30EN	1	●	M30	8203425	64,20
MD177.12.7A7D-WJ30EN	WJ30EN	1	●	M30	8203438	128,00
MD177.12.7A7DI-WJ30EN	WJ30EN	1	●	M30	8203442	128,00
MD177.12.7A7DI038-WJ30EN	WJ30EN	1	●	M30	8203439	128,00
MD177.12.7A7D038-WJ30EN	WJ30EN	1	●	M30	8203435	128,00
MD177.12.7A7D076-WJ30EN	WJ30EN	1	●	M30	8203436	128,00
MD177.12.7A7D076I-WJ30EN	WJ30EN	1	●	M30	8203440	128,00
MD177.12.7A7D152-WJ30EN	WJ30EN	1	●	M30	8203437	128,00
MD177.12.7A7D152I-WJ30EN	WJ30EN	1	●	M30	8203441	128,00
MD177.12.7A7LK-WJ30EN	WJ30EN	1	●	M30	8203482	148,00
MD177.12.7A7L038K-WJ30EN	WJ30EN	1	●	M30	8203479	148,00
MD177.12.7A7L076K-WJ30EN	WJ30EN	1	●	M30	8203480	148,00
MD177.12.7A7L152K-WJ30EN	WJ30EN	1	●	M30	8203481	148,00
MD177.12.7A7S-WJ30EN	WJ30EN	1	●	M30	8203434	96,30
MD177.12.7A7S038-WJ30EN	WJ30EN	1	●	M30	8203431	96,30
MD177.12.7A7S076-WJ30EN	WJ30EN	1	●	M30	8203432	96,30
MD177.12.7A7S152-WJ30EN	WJ30EN	1	●	M30	8203433	96,30
MD177.15.9A7D-WJ30EN	WJ30EN	1	●	M30	8203448	193,00
MD177.15.9A7DI-WJ30EN	WJ30EN	1	●	M30	8203452	193,00
MD177.15.9A7D038-WJ30EN	WJ30EN	1	●	M30	8203446	193,00
MD177.15.9A7D038I-WJ30EN	WJ30EN	1	●	M30	8203449	193,00
MD177.15.9A7D076-WJ30EN	WJ30EN	1	●	M30	8203447	193,00
MD177.15.9A7D076I-WJ30EN	WJ30EN	1	●	M30	8203450	193,00
MD177.15.9A7D152I-WJ30EN	WJ30EN	1	●	M30	8203451	193,00
MD177.15.9A7LJ-WJ30EN	WJ30EN	1	●	M30	8203486	221,00
MD177.15.9A7L038J-WJ30EN	WJ30EN	1	●	M30	8203483	221,00
MD177.15.9A7L076J-WJ30EN	WJ30EN	1	●	M30	8203484	221,00
MD177.15.9A7L152J-WJ30EN	WJ30EN	1	●	M30	8203485	221,00
MD177.15.9A7S-WJ30EN	WJ30EN	1	●	M30	8203445	144,00
MD177.15.9A7S038-WJ30EN	WJ30EN	1	●	M30	8203443	144,00
MD177.15.9A7S076-WJ30EN	WJ30EN	1	●	M30	8203444	144,00
MD177.19.1A7D-WJ30EN	WJ30EN	1	●	M30	8203460	267,00
MD177.19.1A7D038-WJ30EN	WJ30EN	1	●	M30	8203465	267,00
MD177.19.1A7D076-WJ30EN	WJ30EN	1	●	M30	8203457	267,00
MD177.19.1A7D152-WJ30EN	WJ30EN	1	●	M30	8203458	267,00
MD177.19.1A7D305-WJ30EN	WJ30EN	1	●	M30	8203459	267,00
MD177.19.1A7LJ-WJ30EN	WJ30EN	1	●	M30	8203464	308,00
MD177.19.1A7L076J-WJ30EN	WJ30EN	1	●	M30	8203461	308,00
MD177.19.1A7L152J-WJ30EN	WJ30EN	1	●	M30	8203462	308,00
MD177.19.1A7L305J-WJ30EN	WJ30EN	1	●	M30	8203463	308,00
MD177.19.1A7S-WJ30EN	WJ30EN	1	●	M30	8203456	201,00
MD177.19.1A7S076-WJ30EN	WJ30EN	1	●	M30	8203453	201,00

Bezeichnung / Designation	Sorte / Grade	VE / US		Disc. Gr.	Article No.	EURO Stück / piece
MD177.19.1A7S152-WJ30EN	WJ30EN	1	●	M30	8203454	201,00
MD177.19.1A7S305-WJ30EN	WJ30EN	1	●	M30	8203455	201,00
MD177.19.1A7XK-WJ30EN	WJ30EN	1	●	M30	8203488	374,00
MD177.19.1A7X076K-WJ30EN	WJ30EN	1	●	M30	8203487	374,00
MD177.19.1A7X152K-WJ30EN	WJ30EN	1	●	M30	8203489	374,00
MD177.25.4A7DI-WJ30EN	WJ30EN	1	●	M30	8203469	385,00
MD177.25.4A7D076I-WJ30EN	WJ30EN	1	●	M30	8203466	385,00
MD177.25.4A7D152I-WJ30EN	WJ30EN	1	●	M30	8203467	385,00
MD177.25.4A7D305I-WJ30EN	WJ30EN	1	●	M30	8203468	385,00
MD177.25.4A7LJ-WJ30EN	WJ30EN	1	●	M30	8203493	443,00
MD177.25.4A7L038J-WJ30EN	WJ30EN	1	●	M30	8203490	443,00
MD177.25.4A7L076J-WJ30EN	WJ30EN	1	●	M30	8203491	443,00
MD177.25.4A7L152J-WJ30EN	WJ30EN	1	●	M30	8203494	443,00
MD177.25.4A7L305J-WJ30EN	WJ30EN	1	●	M30	8203492	443,00
MD265-16.0A3BC-WJ30DD	WJ30DD	1	●	M30	8200517	303,00
MD265-16.0A3BC-WJ30UU	WJ30UU	1	●	M30	8200513	242,00
MD265-16.0A3B200C-WJ30DD	WJ30DD	1	●	M30	8200514	333,00
MD265-16.0A3B200C-WJ30UU	WJ30UU	1	●	M30	8200510	267,00
MD265-16.0A3B300C-WJ30DD	WJ30DD	1	●	M30	8200515	333,00
MD265-16.0A3B300C-WJ30UU	WJ30UU	1	●	M30	8200511	267,00
MD265-16.0A3B400C-WJ30DD	WJ30DD	1	●	M30	8200516	333,00
MD265-16.0A3B400C-WJ30UU	WJ30UU	1	●	M30	8200512	267,00
MD265-16.0A3LD-WJ30UU	WJ30UU	1	●	M30	8200521	279,00
MD265-16.0A3L200D-WJ30UU	WJ30UU	1	●	M30	8200518	307,00
MD265-16.0A3L300D-WJ30UU	WJ30UU	1	●	M30	8200519	307,00
MD265-16.0A3L400D-WJ30UU	WJ30UU	1	●	M30	8200520	307,00
MD265-20.0A3BC-WJ30DD	WJ30DD	1	●	M30	8200529	462,00
MD265-20.0A3BC-WJ30UU	WJ30UU	1	●	M30	8200525	370,00
MD265-20.0A3B200C-WJ30DD	WJ30DD	1	●	M30	8200526	509,00
MD265-20.0A3B200C-WJ30UU	WJ30UU	1	●	M30	8200522	407,00
MD265-20.0A3B300C-WJ30DD	WJ30DD	1	●	M30	8200527	509,00
MD265-20.0A3B300C-WJ30UU	WJ30UU	1	●	M30	8200523	407,00
MD265-20.0A3B400C-WJ30DD	WJ30DD	1	●	M30	8200528	509,00
MD265-20.0A3B400C-WJ30UU	WJ30UU	1	●	M30	8200524	407,00
MD265-20.0A3LC-WJ30UU	WJ30UU	1	●	M30	8200533	425,00
MD265-20.0A3L200C-WJ30UU	WJ30UU	1	●	M30	8200530	468,00
MD265-20.0A3L300C-WJ30UU	WJ30UU	1	●	M30	8200531	468,00
MD265-20.0A3L400C-WJ30UU	WJ30UU	1	●	M30	8200532	468,00
MD265-20.0A3XD-WJ30UU	WJ30UU	1	●	M30	8200537	518,00
MD265-20.0A3X200D-WJ30UU	WJ30UU	1	●	M30	8200534	570,00
MD265-20.0A3X300D-WJ30UU	WJ30UU	1	●	M30	8200535	570,00
MD265-20.0A3X400D-WJ30UU	WJ30UU	1	●	M30	8200536	570,00
MD265-25.0A3BC-WJ30DD	WJ30DD	1	●	M30	8200545	574,00
MD265-25.0A3BC-WJ30UU	WJ30UU	1	●	M30	8200541	459,00
MD265-25.0A3B200C-WJ30DD	WJ30DD	1	●	M30	8200542	631,00
MD265-25.0A3B200C-WJ30UU	WJ30UU	1	●	M30	8200538	505,00
MD265-25.0A3B300C-WJ30DD	WJ30DD	1	●	M30	8200543	631,00
MD265-25.0A3B300C-WJ30UU	WJ30UU	1	●	M30	8200539	505,00
MD265-25.0A3B400C-WJ30DD	WJ30DD	1	●	M30	8200544	631,00
MD265-25.0A3B400C-WJ30UU	WJ30UU	1	●	M30	8200540	505,00
MD265-25.0A3LB-WJ30UU	WJ30UU	1	●	M30	8200549	528,00
MD265-25.0A3L200B-WJ30UU	WJ30UU	1	●	M30	8200546	581,00
MD265-25.0A3L300B-WJ30UU	WJ30UU	1	●	M30	8200547	581,00
MD265-25.0A3L400B-WJ30UU	WJ30UU	1	●	M30	8200548	581,00
MD265-25.0A3XC-WJ30UU	WJ30UU	1	●	M30	8200553	643,00
MD265-25.0A3X200C-WJ30UU	WJ30UU	1	●	M30	8200550	707,00
MD265-25.0A3X300C-WJ30UU	WJ30UU	1	●	M30	8200551	707,00
MD265-25.0A3X400C-WJ30UU	WJ30UU	1	●	M30	8200552	707,00
MD266-02.0A2BE-WJ30UU	WJ30UU	1	●	M30	8033635	49,90
MD266-02.0A2B020E-WJ30UU	WJ30UU	1	●	M30	8033634	54,80
MD266-03.0A2BD-WJ30UU	WJ30UU	1	●	M30	8033637	49,90
MD266-03.0A2B030D-WJ30UU	WJ30UU	1	●	M30	8033636	54,80
MD266-04.0A2BD-WJ30UU	WJ30UU	1	●	M30	8033639	49,90
MD266-04.0A2B030D-WJ30UU	WJ30UU	1	●	M30	8033638	54,80
MD266-05.0A2BC-WJ30UU	WJ30UU	1	●	M30	8033833	49,90
MD266-05.0A2B050C-WJ30UU	WJ30UU	1	●	M30	8033832	54,80
MD266-05.0A2LD-WJ30UU	WJ30UU	1	●	M30	8033831	57,30
MD266-05.0A2L050D-WJ30UU	WJ30UU	1	●	M30	8033830	63,10
MD266-06.0A2LD-WJ30UU	WJ30UU	1	●	M30	8033836	68,80
MD266-06.0A2L050D-WJ30UU	WJ30UU	1	●	M30	8033834	75,70

Bezeichnung / Designation	Sorte / Grade	VE / US		Disc. Gr.	Article No.	EURO Stück / piece
MD266-06.0A2L100D-WJ30UU	WJ30UU	1	●	M30	8033835	75,70
MD266-08.0A2LE-WJ30UU	WJ30UU	1	●	M30	8033840	96,30
MD266-08.0A2L050E-WJ30UU	WJ30UU	1	●	M30	8033837	106,00
MD266-08.0A2L100E-WJ30UU	WJ30UU	1	●	M30	8033838	106,00
MD266-08.0A2L200E-WJ30UU	WJ30UU	1	●	M30	8033839	106,00
MD266-10.0A2BC-WJ30UU	WJ30UU	1	●	M30	8033854	108,00
MD266-10.0A2B050C-WJ30UU	WJ30UU	1	●	M30	8033851	118,00
MD266-10.0A2B100C-WJ30UU	WJ30UU	1	●	M30	8033852	118,00
MD266-10.0A2B200C-WJ30UU	WJ30UU	1	●	M30	8033853	118,00
MD266-10.0A2LD-WJ30UU	WJ30UU	1	●	M30	8033850	124,00
MD266-10.0A2L050D-WJ30UU	WJ30UU	1	●	M30	8033847	136,00
MD266-10.0A2L100D-WJ30UU	WJ30UU	1	●	M30	8033848	136,00
MD266-10.0A2L200D-WJ30UU	WJ30UU	1	●	M30	8033849	136,00
MD266-10.0A3B050C-WJ30UU	WJ30UU	1	●	M30	8033844	125,00
MD266-10.0A3B100C-WJ30UU	WJ30UU	1	●	M30	8033845	125,00
MD266-10.0A3B200C-WJ30UU	WJ30UU	1	●	M30	8033846	125,00
MD266-10.0A3L050D-WJ30UU	WJ30UU	1	●	M30	8033841	144,00
MD266-10.0A3L100D-WJ30UU	WJ30UU	1	●	M30	8033842	144,00
MD266-10.0A3L200D-WJ30UU	WJ30UU	1	●	M30	8033843	144,00
MD266-12.0A2LD-WJ30UU	WJ30UU	1	●	M30	8033867	165,00
MD266-12.0A2L050D-WJ30UU	WJ30UU	1	●	M30	8033864	182,00
MD266-12.0A2L200D-WJ30UU	WJ30UU	1	●	M30	8033865	182,00
MD266-12.0A2L300D-WJ30UU	WJ30UU	1	●	M30	8033866	182,00
MD266-12.0A3B050C-WJ30UU	WJ30UU	1	●	M30	8033861	167,00
MD266-12.0A3B200C-WJ30UU	WJ30UU	1	●	M30	8033862	167,00
MD266-12.0A3B300C-WJ30UU	WJ30UU	1	●	M30	8033863	167,00
MD266-12.0A3L050D-WJ30UU	WJ30UU	1	●	M30	8033858	192,00
MD266-12.0A3L200D-WJ30UU	WJ30UU	1	●	M30	8033859	192,00
MD266-12.0A3L300D-WJ30UU	WJ30UU	1	●	M30	8033860	192,00
MD266-12.0A3X050E-WJ30UU	WJ30UU	1	●	M30	8033855	233,00
MD266-12.0A3X200E-WJ30UU	WJ30UU	1	●	M30	8033856	233,00
MD266-12.0A3X300E-WJ30UU	WJ30UU	1	●	M30	8033857	233,00
MD266-16.0A2LD-WJ30UU	WJ30UU	1	●	M30	8033884	261,00
MD266-16.0A2L050D-WJ30UU	WJ30UU	1	●	M30	8033880	288,00
MD266-16.0A2L200D-WJ30UU	WJ30UU	1	●	M30	8033881	288,00
MD266-16.0A2L300D-WJ30UU	WJ30UU	1	●	M30	8033882	288,00
MD266-16.0A2L400D-WJ30UU	WJ30UU	1	●	M30	8033883	288,00
MD266-16.0A3B050C-WJ30UU	WJ30UU	1	●	M30	8033876	264,00
MD266-16.0A3B200C-WJ30UU	WJ30UU	1	●	M30	8033877	264,00
MD266-16.0A3B300C-WJ30UU	WJ30UU	1	●	M30	8033878	264,00
MD266-16.0A3B400C-WJ30UU	WJ30UU	1	●	M30	8033879	264,00
MD266-16.0A3L050D-WJ30UU	WJ30UU	1	●	M30	8033872	304,00
MD266-16.0A3L200D-WJ30UU	WJ30UU	1	●	M30	8033873	304,00
MD266-16.0A3L300D-WJ30UU	WJ30UU	1	●	M30	8033874	304,00
MD266-16.0A3L400D-WJ30UU	WJ30UU	1	●	M30	8033875	304,00
MD266-16.0A3X050E-WJ30UU	WJ30UU	1	●	M30	8033868	370,00
MD266-16.0A3X200E-WJ30UU	WJ30UU	1	●	M30	8033869	370,00
MD266-16.0A3X300E-WJ30UU	WJ30UU	1	●	M30	8033870	370,00
MD266-16.0A3X400E-WJ30UU	WJ30UU	1	●	M30	8033871	370,00
MD266-20.0A2LC-WJ30UU	WJ30UU	1	●	M30	8033894	399,00
MD266-20.0A2L050C-WJ30UU	WJ30UU	1	●	M30	8033891	439,00
MD266-20.0A2L300C-WJ30UU	WJ30UU	1	●	M30	8033892	439,00
MD266-20.0A2L400C-WJ30UU	WJ30UU	1	●	M30	8033893	439,00
MD266-20.0A3L050C-WJ30UU	WJ30UU	1	●	M30	8033888	463,00
MD266-20.0A3L300C-WJ30UU	WJ30UU	1	●	M30	8033889	463,00
MD266-20.0A3L400C-WJ30UU	WJ30UU	1	●	M30	8033890	463,00
MD266-20.0A3X050D-WJ30UU	WJ30UU	1	●	M30	8033885	564,00
MD266-20.0A3X300D-WJ30UU	WJ30UU	1	●	M30	8033886	564,00
MD266-20.0A3X400D-WJ30UU	WJ30UU	1	●	M30	8033887	564,00
MD266-25.0A3B050B-WJ30UU	WJ30UU	1	●	M30	8033901	500,00
MD266-25.0A3B300B-WJ30UU	WJ30UU	1	●	M30	8033902	500,00
MD266-25.0A3B400B-WJ30UU	WJ30UU	1	●	M30	8033903	500,00
MD266-25.0A3L050B-WJ30UU	WJ30UU	1	●	M30	8033898	575,00
MD266-25.0A3L300B-WJ30UU	WJ30UU	1	●	M30	8033899	575,00
MD266-25.0A3L400B-WJ30UU	WJ30UU	1	●	M30	8033900	575,00
MD266-25.0A3X050C-WJ30UU	WJ30UU	1	●	M30	8033895	700,00
MD266-25.0A3X300C-WJ30UU	WJ30UU	1	●	M30	8033896	700,00
MD266-25.0A3X400C-WJ30UU	WJ30UU	1	●	M30	8033897	700,00
MD340-02.0A3PC-WK40TP	WK40TP	1	●	M30	8199040	59,20
MD340-03.0A3PC-WK40TP	WK40TP	1	●	M30	8199041	59,20

Bezeichnung / Designation	Sorte / Grade	VE / US		Disc. Gr.	Article No.	EURO Stück / piece
MD340-03.0A4BC-WK40TP	WK40TP	1	●	M30	8199050	62,30
MD340-03.0A4B020C-WK40TP	WK40TP	1	●	M30	8199061	68,60
MD340-03.0A4B050C-WK40TP	WK40TP	1	●	M30	8199062	68,60
MD340-04.0A3PC-WK40TP	WK40TP	1	●	M30	8199042	59,20
MD340-04.0A4BC-WK40TP	WK40TP	1	●	M30	8199051	62,30
MD340-04.0A4B020C-WK40TP	WK40TP	1	●	M30	8199063	68,60
MD340-04.0A4B050C-WK40TP	WK40TP	1	●	M30	8199064	68,60
MD340-05.0A3PC-WK40TP	WK40TP	1	●	M30	8199043	59,20
MD340-05.0A4BC-WK40TP	WK40TP	1	●	M30	8199052	62,30
MD340-05.0A4B050C-WK40TP	WK40TP	1	●	M30	8199065	68,60
MD340-05.0A4B100C-WK40TP	WK40TP	1	●	M30	8199066	68,60
MD340-06.0A3PC-WK40TP	WK40TP	1	●	M30	8199044	59,20
MD340-06.0A4BC-WK40TP	WK40TP	1	●	M30	8199053	62,30
MD340-06.0A4B050C-WK40TP	WK40TP	1	●	M30	8199067	68,60
MD340-06.0A4B100C-WK40TP	WK40TP	1	●	M30	8199068	68,60
MD340-06.0W5B-WK40TP	WK40TP	1	●	M30	8199094	65,40
MD340-06.0W5B050-WK40TP	WK40TP	1	●	M30	8199101	65,40
MD340-06.0W5B100-WK40TP	WK40TP	1	●	M30	8199102	65,40
MD340-06.0W5L030J-WK40TP	WK40TP	1	●	M30	8199115	75,30
MD340-08.0A3PC-WK40TP	WK40TP	1	●	M30	8199045	82,90
MD340-08.0A4BC-WK40TP	WK40TP	1	●	M30	8199054	87,30
MD340-08.0A4B050C-WK40TP	WK40TP	1	●	M30	8199069	96,00
MD340-08.0A4B100C-WK40TP	WK40TP	1	●	M30	8199070	96,00
MD340-08.0A4B200C-WK40TP	WK40TP	1	●	M30	8199071	96,00
MD340-08.0W5B-WK40TP	WK40TP	1	●	M30	8199095	91,60
MD340-08.0W5B050-WK40TP	WK40TP	1	●	M30	8199103	91,60
MD340-08.0W5B100-WK40TP	WK40TP	1	●	M30	8199104	91,60
MD340-08.0W5B200-WK40TP	WK40TP	1	●	M30	8199105	91,60
MD340-08.0W5L040J-WK40TP	WK40TP	1	●	M30	8199116	105,00
MD340-10.0A3PC-WK40TP	WK40TP	1	●	M30	8199046	107,00
MD340-10.0A4BC-WK40TP	WK40TP	1	●	M30	8199055	112,00
MD340-10.0A4B050C-WK40TP	WK40TP	1	●	M30	8199072	123,00
MD340-10.0A4B100C-WK40TP	WK40TP	1	●	M30	8199073	123,00
MD340-10.0A4B200C-WK40TP	WK40TP	1	●	M30	8199074	123,00
MD340-10.0W3PC-WK40TP	WK40TP	1	●	M30	8199084	107,00
MD340-10.0W4BC-WK40TP	WK40TP	1	●	M30	8199088	112,00
MD340-10.0W4B050C-WK40TP	WK40TP	1	●	M30	8199121	123,00
MD340-10.0W4B100C-WK40TP	WK40TP	1	●	M30	8199122	123,00
MD340-10.0W4B200C-WK40TP	WK40TP	1	●	M30	8199123	123,00
MD340-10.0W5B-WK40TP	WK40TP	1	●	M30	8199096	118,00
MD340-10.0W5B050-WK40TP	WK40TP	1	●	M30	8199106	118,00
MD340-10.0W5B100-WK40TP	WK40TP	1	●	M30	8199107	118,00
MD340-10.0W5B200-WK40TP	WK40TP	1	●	M30	8199108	118,00
MD340-10.0W5L050J-WK40TP	WK40TP	1	●	M30	8199117	135,00
MD340-12.0A3PC-WK40TP	WK40TP	1	●	M30	8199047	142,00
MD340-12.0A4BC-WK40TP	WK40TP	1	●	M30	8199056	150,00
MD340-12.0A4B050C-WK40TP	WK40TP	1	●	M30	8199075	165,00
MD340-12.0A4B100C-WK40TP	WK40TP	1	●	M30	8199076	165,00
MD340-12.0A4B200C-WK40TP	WK40TP	1	●	M30	8199077	165,00
MD340-12.0W3PC-WK40TP	WK40TP	1	●	M30	8199085	142,00
MD340-12.0W4BC-WK40TP	WK40TP	1	●	M30	8199089	150,00
MD340-12.0W4B050C-WK40TP	WK40TP	1	●	M30	8199124	165,00
MD340-12.0W4B100C-WK40TP	WK40TP	1	●	M30	8199125	165,00
MD340-12.0W4B200C-WK40TP	WK40TP	1	●	M30	8199126	165,00
MD340-12.0W5B-WK40TP	WK40TP	1	●	M30	8199097	157,00
MD340-12.0W5B050-WK40TP	WK40TP	1	●	M30	8321532	143,00
MD340-12.0W5B100-WK40TP	WK40TP	1	●	M30	8321533	143,00
MD340-12.0W5B200-WK40TP	WK40TP	1	●	M30	8321534	143,00
MD340-12.0W5L060J-WK40TP	WK40TP	1	●	M30	8199118	181,00
MD340-14.0A4BC-WK40TP	WK40TP	1	●	M30	8199057	199,00
MD340-14.0W4BC-WK40TP	WK40TP	1	●	M30	8199090	199,00
MD340-16.0A3PC-WK40TP	WK40TP	1	●	M30	8199048	225,00
MD340-16.0A4BC-WK40TP	WK40TP	1	●	M30	8199058	237,00
MD340-16.0A4B050C-WK40TP	WK40TP	1	●	M30	8199078	261,00
MD340-16.0A4B100C-WK40TP	WK40TP	1	●	M30	8199079	261,00
MD340-16.0A4B200C-WK40TP	WK40TP	1	●	M30	8199080	261,00
MD340-16.0W3PC-WK40TP	WK40TP	1	●	M30	8199086	225,00
MD340-16.0W4BC-WK40TP	WK40TP	1	●	M30	8199091	237,00
MD340-16.0W4B050C-WK40TP	WK40TP	1	●	M30	8199127	261,00
MD340-16.0W4B100C-WK40TP	WK40TP	1	●	M30	8199128	261,00

Bezeichnung / Designation	Sorte / Grade	VE / US		Disc. Gr.	Article No.	EURO Stück / piece
MD340-16.0W4B200C-WK40TP	WK40TP	1	●	M30	8199129	261,00
MD340-16.0W5B-WK40TP	WK40TP	1	●	M30	8199098	249,00
MD340-16.0W5B050-WK40TP	WK40TP	1	●	M30	8321535	226,00
MD340-16.0W5B100-WK40TP	WK40TP	1	●	M30	8321536	226,00
MD340-16.0W5B200-WK40TP	WK40TP	1	●	M30	8321537	226,00
MD340-16.0W5L080J-WK40TP	WK40TP	1	●	M30	8199119	286,00
MD340-18.0A4BC-WK40TP	WK40TP	1	●	M30	8199059	312,00
MD340-18.0W4BC-WK40TP	WK40TP	1	●	M30	8199092	312,00
MD340-20.0A3PC-WK40TP	WK40TP	1	●	M30	8199049	343,00
MD340-20.0A4BC-WK40TP	WK40TP	1	●	M30	8199060	361,00
MD340-20.0A4B100C-WK40TP	WK40TP	1	●	M30	8199081	398,00
MD340-20.0A4B200C-WK40TP	WK40TP	1	●	M30	8199082	398,00
MD340-20.0A4B400C-WK40TP	WK40TP	1	●	M30	8199083	398,00
MD340-20.0W3PC-WK40TP	WK40TP	1	●	M30	8199087	343,00
MD340-20.0W4BC-WK40TP	WK40TP	1	●	M30	8199093	361,00
MD340-20.0W4B100C-WK40TP	WK40TP	1	●	M30	8199130	398,00
MD340-20.0W4B200C-WK40TP	WK40TP	1	●	M30	8199131	398,00
MD340-20.0W4B400C-WK40TP	WK40TP	1	●	M30	8199132	398,00
MD340-20.0W5B-WK40TP	WK40TP	1	●	M30	8199099	380,00
MD340-20.0W5L100J-WK40TP	WK40TP	1	●	M30	8199120	436,00
MD340-25.0W5B-WK40TP	WK40TP	1	●	M30	8199100	471,00
MD340.1.58A3PC-WK40TP	WK40TP	1	●	M30	8198967	60,80
MD340.2.38A3PC-WK40TP	WK40TP	1	●	M30	8198968	56,20
MD340.3.18A3PC-WK40TP	WK40TP	1	●	M30	8198969	56,20
MD340.4.76A3PC-WK40TP	WK40TP	1	●	M30	8199000	56,20
MD340.6.35A3PC-WK40TP	WK40TP	1	●	M30	8199001	61,90
MD340.6.35A3P038C-WK40TP	WK40TP	1	●	M30	8199008	68,10
MD340.6.35A3P076C-WK40TP	WK40TP	1	●	M30	8199009	68,10
MD340.6.35A4DC-WK40TP	WK40TP	1	●	M30	8199016	65,10
MD340.6.35A4D038C-WK40TP	WK40TP	1	●	M30	8199022	71,60
MD340.6.35A4D076C-WK40TP	WK40TP	1	●	M30	8199023	71,60
MD340.7.93A3PC-WK40TP	WK40TP	1	●	M30	8199002	78,70
MD340.7.93A4DC-WK40TP	WK40TP	1	●	M30	8199017	82,90
MD340.9.53A3PC-WK40TP	WK40TP	1	●	M30	8199003	101,00
MD340.9.53A3P038C-WK40TP	WK40TP	1	●	M30	8199010	111,00
MD340.9.53A3P076C-WK40TP	WK40TP	1	●	M30	8199011	111,00
MD340.9.53A4DC-WK40TP	WK40TP	1	●	M30	8199018	107,00
MD340.9.53A4D038C-WK40TP	WK40TP	1	●	M30	8199024	117,00
MD340.9.53A4D076C-WK40TP	WK40TP	1	●	M30	8199025	117,00
MD340.9.53W5D-WK40TP	WK40TP	1	●	M30	8199032	112,00
MD340.9.53W5D076-WK40TP	WK40TP	1	●	M30	8199035	112,00
MD340.11.1A3PC-WK40TP	WK40TP	1	●	M30	8199004	113,00
MD340.12.7A3PC-WK40TP	WK40TP	1	●	M30	8199005	135,00
MD340.12.7A3P076C-WK40TP	WK40TP	1	●	M30	8199012	148,00
MD340.12.7A3P152C-WK40TP	WK40TP	1	●	M30	8199013	148,00
MD340.12.7A4DC-WK40TP	WK40TP	1	●	M30	8199019	142,00
MD340.12.7A4D076C-WK40TP	WK40TP	1	●	M30	8199026	156,00
MD340.12.7A4D152C-WK40TP	WK40TP	1	●	M30	8199027	156,00
MD340.12.7W5D-WK40TP	WK40TP	1	●	M30	8199033	149,00
MD340.12.7W5D076-WK40TP	WK40TP	1	●	M30	8199036	149,00
MD340.12.7W5D152-WK40TP	WK40TP	1	●	M30	8199037	149,00
MD340.15.9A3PC-WK40TP	WK40TP	1	●	M30	8199006	214,00
MD340.15.9A4DC-WK40TP	WK40TP	1	●	M30	8199020	225,00
MD340.15.9A4D076C-WK40TP	WK40TP	1	●	M30	8199028	247,00
MD340.15.9A4D152C-WK40TP	WK40TP	1	●	M30	8199029	247,00
MD340.15.9W5D-WK40TP	WK40TP	1	●	M30	8199034	236,00
MD340.19.1A3PC-WK40TP	WK40TP	1	●	M30	8199007	326,00
MD340.19.1A3P076C-WK40TP	WK40TP	1	●	M30	8199014	359,00
MD340.19.1A3P152C-WK40TP	WK40TP	1	●	M30	8199015	359,00
MD340.19.1A4DC-WK40TP	WK40TP	1	●	M30	8199021	343,00
MD340.19.1A4D076C-WK40TP	WK40TP	1	●	M30	8199030	378,00
MD340.19.1A4D152C-WK40TP	WK40TP	1	●	M30	8199031	378,00
MD340.19.1W5D076-WK40TP	WK40TP	1	●	M30	8199038	361,00
MD340.19.1W5D152-WK40TP	WK40TP	1	●	M30	8199039	361,00
MD344-06.0W4B030C-WK40TP	WK40TP	1	●	M30	8200554	68,60
MD344-08.0W4B040C-WK40TP	WK40TP	1	●	M30	8200555	96,00
MD344-10.0W4B050C-WK40TP	WK40TP	1	●	M30	8200556	123,00
MD344-12.0W4B060C-WK40TP	WK40TP	1	●	M30	8200557	165,00
MD344-16.0W4B080C-WK40TP	WK40TP	1	●	M30	8200558	261,00
MD344-20.0W4B100C-WK40TP	WK40TP	1	●	M30	8200559	398,00

Bezeichnung / Designation	Sorte / Grade	VE / US		Disc. Gr.	Article No.	EURO Stück / piece
MD377-06.0A5B050C-WK40TZ	WK40TZ	1	●	M30	7881915	111,00
MD377-06.0A5B100C-WK40TZ	WK40TZ	1	●	M30	7881916	111,00
MD377-08.0A5B050C-WK40TZ	WK40TZ	1	●	M30	7881917	156,00
MD377-08.0A5B100C-WK40TZ	WK40TZ	1	●	M30	7881918	156,00
MD377-10.0A5B050C-WK40TZ	WK40TZ	1	●	M30	7881919	200,00
MD377-10.0A5B100C-WK40TZ	WK40TZ	1	●	M30	7881930	200,00
MD377-12.0A5B050C-WK40TZ	WK40TZ	1	●	M30	7881931	267,00
MD377-12.0A5B100C-WK40TZ	WK40TZ	1	●	M30	7881932	267,00
MD377-12.0A5B200C-WK40TZ	WK40TZ	1	●	M30	7881933	267,00
MD377-12.0A5B300C-WK40TZ	WK40TZ	1	●	M30	7881934	267,00
MD377-16.0A5B300C-WK40TZ	WK40TZ	1	●	M30	7881935	422,00
MD377-16.0A5B400C-WK40TZ	WK40TZ	1	●	M30	7881936	422,00
MD377-16.0W5B300C-WK40TZ	WK40TZ	1	●	M30	7881942	422,00
MD377-16.0W5B400C-WK40TZ	WK40TZ	1	●	M30	7881943	422,00
MD377-20.0A5B300C-WK40TZ	WK40TZ	1	●	M30	7881937	645,00
MD377-20.0A5B400C-WK40TZ	WK40TZ	1	●	M30	7881938	645,00
MD377-20.0W5B300C-WK40TZ	WK40TZ	1	●	M30	7881944	645,00
MD377-20.0W5B400C-WK40TZ	WK40TZ	1	●	M30	7881945	645,00
MD377-25.0A5B300C-WK40TZ	WK40TZ	1	●	M30	7881939	800,00
MD377-25.0A5B400C-WK40TZ	WK40TZ	1	●	M30	7881940	800,00
MD377-25.0A5B635C-WK40TZ	WK40TZ	1	●	M30	7881941	800,00
MD377-25.0W5B300C-WK40TZ	WK40TZ	1	●	M30	7881946	800,00
MD377-25.0W5B400C-WK40TZ	WK40TZ	1	●	M30	7881947	800,00
MD838-16A4P301000-WJ30RA	WJ30RA	1	●	M30	7876751	385,00
MD838-16A4P401000-WJ30RA	WJ30RA	1	●	M30	7876752	385,00
MD838-16E8P201000-WJ30RD	WJ30RD	1	●	MS5	7877233	211,00
MD838-16E8P301000-WJ30RD	WJ30RD	1	●	MS5	7877234	211,00
MD838-16E8P401000-WJ30RD	WJ30RD	1	●	MS5	7877235	211,00
MD838-16E8P201000-WJ30RA	WJ30RA	1	●	MS5	7877236	211,00
MD838-12A8P300500-WJ30RA	WJ30RA	1	●	M30	7876750	292,00
MD838-16E8P301000-WJ30RA	WJ30RA	1	●	MS5	7877237	211,00
MD838-16E8P401000-WJ30RA	WJ30RA	1	●	MS5	7877238	211,00
MD838-12A4P300500-WJ30RD	WJ30RD	1	●	M30	7876737	243,00
MD838-12A4P300500-WJ30RA	WJ30RA	1	●	M30	7876749	243,00
MD838-12A8P200500-WJ30RA	WJ30RA	1	●	M30	7876748	292,00
MD838-12A4P200500-WJ30RA	WJ30RA	1	●	M30	7876747	243,00
MD838-10A8P200400-WJ30RA	WJ30RA	1	●	M30	7876746	219,00
MD838-12A8P300500-WJ30RD	WJ30RD	1	●	M30	7876738	292,00
MD838-16A4P301000-WJ30RD	WJ30RD	1	●	M30	7876739	385,00
MD838-12A8P200500-WJ30RD	WJ30RD	1	●	M30	7876736	292,00
MD838-12A4P200500-WJ30RD	WJ30RD	1	●	M30	7876735	243,00
MD838-10A8P200400-WJ30RD	WJ30RD	1	●	M30	7876734	219,00
MD838-10A4P200400-WJ30RD	WJ30RD	1	●	M30	7876733	183,00
MD838-08A4P100300-WJ30RD	WJ30RD	1	●	M30	7876732	142,00
MD838-08A4P050300-WJ30RD	WJ30RD	1	●	M30	7876731	142,00
MD838-16A4P401000-WJ30RD	WJ30RD	1	●	M30	7876740	385,00
MD838-06A4P050250-WJ30RA	WJ30RA	1	●	M30	7876741	101,00
MD838-06A4P100250-WJ30RA	WJ30RA	1	●	M30	7876742	101,00
MD838-10A4P200400-WJ30RA	WJ30RA	1	●	M30	7876745	183,00
MD838-08A4P100300-WJ30RA	WJ30RA	1	●	M30	7876744	142,00
MD838-08A4P050300-WJ30RA	WJ30RA	1	●	M30	7876743	142,00
MD838-06A4P100250-WJ30RD	WJ30RD	1	●	M30	7876730	101,00
MD838-06A4P050250-WJ30RD	WJ30RD	1	●	M30	7876689	101,00
MD839-16A4P40100-WJ30RA	WJ30RA	1	●	M30	7877294	385,00
MD839-16A4P30100-WJ30RA	WJ30RA	1	●	M30	7877293	385,00
MD839-12A4P30100-WJ30RA	WJ30RA	1	●	M30	7877292	243,00
MD839-12A4P20100-WJ30RA	WJ30RA	1	●	M30	7877291	243,00
MD839-10A4P20100-WJ30RA	WJ30RA	1	●	M30	7877290	183,00
MD839-08A4P15100-WJ30RA	WJ30RA	1	●	M30	7877289	142,00
MD839-06A4P10100-WJ30RA	WJ30RA	1	●	M30	7877288	101,00
MD839-16A4P40100-WJ30RD	WJ30RD	1	●	M30	7877287	385,00
MD839-16A4P30100-WJ30RD	WJ30RD	1	●	M30	7877286	385,00
MD839-12A4P30100-WJ30RD	WJ30RD	1	●	M30	7877285	243,00
MD839-06A4P10100-WJ30RD	WJ30RD	1	●	M30	7877281	101,00
MD839-08A4P15100-WJ30RD	WJ30RD	1	●	M30	7877282	142,00
MD839-10A4P20100-WJ30RD	WJ30RD	1	●	M30	7877283	183,00
MD839-12A4P20100-WJ30RD	WJ30RD	1	●	M30	7877284	243,00
MP060-040B10P	WDN20	1	●	044	7938977	1.509,00
MP060-050B12P	WDN20	1	●	044	7938978	1.881,00
MP060-063B14P	WDN20	1	●	044	7938979	2.276,00

Bezeichnung / Designation	Sorte / Grade	VE / US		Disc. Gr.	Article No.	EURO Stück / piece
MP060-080B16P	WDN20	1	●	044	7939000	2.694,00
MP060-100B18P	WDN20	1	●	044	7939001	3.135,00
MP060-125B22P	WDN20	1	●	044	7939002	3.716,00
MP160-016A03P	WDN20	1	●	044	7938970	816,00
MP160-020A04P	WDN20	1	●	044	7938971	1.088,00
MP160-020T04P	WDN20	1	●	044	7938973	1.088,00
MP160-025A04P	WDN20	1	●	044	7938972	1.152,00
MP160-025T04P	WDN20	1	●	044	7938974	1.152,00
MP160-032T04P	WDN20	1	●	044	7938975	1.216,00
MP160-040T04P	WDN20	1	●	044	7938976	1.280,00
MP260-004A02P	WDN20	1	●	044	7939003	326,00
MP260-005A02P	WDN20	1	●	044	7939004	326,00
MP260-006A02P	WDN20	1	●	044	7939005	326,00
MP260-008A02P	WDN20	1	●	044	7939006	358,00
MP260-010A02P	WDN20	1	●	044	7939007	477,00
MP260-012A02P	WDN20	1	●	044	7939008	597,00
MP260-016A02P	WDN20	1	●	044	7939009	776,00
MP260-016A03P	WDN20	1	●	044	7939010	816,00
MP260-016T02P	WDN20	1	●	044	7939012	776,00
MP260-016T03P	WDN20	1	●	044	7939013	816,00
MP260-020A03P	WDN20	1	●	044	7939011	1.036,00
MP260-020T03P	WDN20	1	●	044	7939014	1.036,00
MPHT120408-G88	WXN15	10	●	009	5022035	21,04
MPHW120408-A57	WKP25S	10	●	009	6071494	20,18
MPHW120408-A57	WKP35S	10	●	009	5918802	20,18
MPHX060304-A57	WKP25S	10	●	009	6071500	14,98
MPHX060304-A57	WKP35S	10	●	009	5918803	14,98
MPHX060304-G88	WXN15	10	●	009	5024081	14,98
MPHX080305-A57	WKP25S	10	●	009	6071503	16,76
MPHX080305-A57	WKP35S	10	●	009	5918804	16,76
MPHX080305-G88	WXN15	10	●	009	5022037	16,76
MPMT120408-F57	WKP35G	10	●	009	7347275	20,43
MPMT120408-F57	WKP35S	10	●	009	5918805	17,02
MPMT120408-F57	WSM35G	10	●	009	8285007	17,88
MPMT120408-F57	WSM35S	10	■	009	7058532*	17,88
MPMT120408-F57	WSP45G	10	●	009	7924245	17,87
MPMX060304-F57	WKP35G	10	●	009	7347278	15,36
MPMX060304-F57	WKP35S	10	●	009	5918806	12,81
MPMX060304-F57	WSM35G	10	●	009	8285008	13,45
MPMX060304-F57	WSM35S	10	■	009	7058533*	13,45
MPMX060304-F57	WSP45G	10	●	009	7924246	13,46
MPMX080305-F57	WKP35G	10	●	009	7347280	16,92
MPMX080305-F57	WKP35S	10	●	009	5918807	14,11
MPMX080305-F57	WSM35G	10	●	009	8285009	14,82
MPMX080305-F57	WSM35S	10	■	009	7058534*	14,82
MPMX080305-F57	WSP45G	10	●	009	7924247	14,82
MSS-E16L00-10-E		1	●	060	5028833	161,00
MSS-E16L00-1616G		1	●	060	5009177	161,00
MSS-E16L02-GX09-1		1	●	060	5009586	102,00
MSS-E16L07-GX09-1		1	●	060	5009560	102,00
MSS-E16L07-GX09-2		1	●	060	5009562	102,00
MSS-E16R00-10-E		1	●	060	5028832	161,00
MSS-E16R00-1616G		1	●	060	5009150	161,00
MSS-E16R02-GX09-1		1	●	060	5009587	102,00
MSS-E16R07-GX09-1		1	●	060	5009561	102,00
MSS-E16R07-GX09-2		1	●	060	5009563	102,00
MSS-E20L00-12-E		1	●	060	5028835	163,00
MSS-E20L00-2020J		1	●	060	5009178	163,00
MSS-E20L03-GX16-2		1	●	060	5009588	103,00
MSS-E20L12-GX16-1		1	●	060	5009564	103,00
MSS-E20L12-GX16-2		1	●	060	5009566	103,00
MSS-E20L12-GX16-3		1	●	060	5009568	103,00
MSS-E20L14-GX24-2A100150		1	●	060	5009711	134,00
MSS-E20L14-GX24-2A5070		1	●	060	5009707	134,00
MSS-E20L14-GX24-2A70100		1	●	060	5009709	134,00
MSS-E20L21-GX24-2		1	●	060	5009594	103,00
MSS-E20L90-12-E		1	●	060	5028837	163,00
MSS-E20L90-2020J		1	●	060	5009325	163,00
MSS-E20R00-12-E		1	●	060	5028834	163,00
MSS-E20R00-2020J		1	●	060	5009155	163,00

Bezeichnung / Designation	Sorte / Grade	VE / US		Disc. Gr.	Article No.	EURO Stück / piece
MSS-E20R03-GX16-2		1	●	060	5009589	103,00
MSS-E20R12-GX16-1		1	●	060	5009565	103,00
MSS-E20R12-GX16-2		1	●	060	5009567	103,00
MSS-E20R12-GX16-3		1	●	060	5009569	103,00
MSS-E20R14-GX24-2A100150		1	●	060	5009712	134,00
MSS-E20R14-GX24-2A5070		1	●	060	5009708	134,00
MSS-E20R14-GX24-2A70100		1	●	060	5009710	134,00
MSS-E20R21-GX24-2		1	●	060	5009595	103,00
MSS-E20R90-12-E		1	●	060	5028836	163,00
MSS-E20R90-2020J		1	●	060	5009327	163,00
MSS-E25L00-16-E		1	●	060	5028827	163,00
MSS-E25L00-2525L		1	●	060	5009179	163,00
MSS-E25L03-GX16-2		1	●	060	5009590	104,00
MSS-E25L12-GX16-1		1	●	060	5009570	104,00
MSS-E25L12-GX16-2		1	●	060	5009572	104,00
MSS-E25L12-GX16-3		1	●	060	5009574	104,00
MSS-E25L12-GX16-4		1	●	060	5009576	104,00
MSS-E25L15-GX24-2A100150		1	●	060	5009717	136,00
MSS-E25L15-GX24-2A5070		1	●	060	5009713	136,00
MSS-E25L15-GX24-2A70100		1	●	060	5009715	136,00
MSS-E25L15-GX24-3A100150		1	●	060	5009723	136,00
MSS-E25L15-GX24-3A150300		1	●	060	5009725	136,00
MSS-E25L15-GX24-3A5070		1	●	060	5009719	136,00
MSS-E25L15-GX24-3A70100		1	●	060	5009721	136,00
MSS-E25L15-GX24-4A100150		1	●	060	5009731	136,00
MSS-E25L15-GX24-4A150300		1	●	060	5009733	136,00
MSS-E25L15-GX24-4A5070		1	●	060	5009727	136,00
MSS-E25L15-GX24-4A70100		1	●	060	5009729	136,00
MSS-E25L21-GX24-2		1	●	060	5009596	104,00
MSS-E25L21-GX24-3		1	●	060	5009598	104,00
MSS-E25L21-GX24-3C100150		1	●	060	5113703	141,00
MSS-E25L21-GX24-3C150300		1	●	060	5113704	141,00
MSS-E25L21-GX24-3C5070		1	●	060	5113705	138,00
MSS-E25L21-GX24-3C70100		1	●	060	5113706	141,00
MSS-E25L21-GX24-4		1	●	060	5009600	104,00
MSS-E25L21-GX24-5		1	●	060	5009602	104,00
MSS-E25L25-GX24-4C100150		1	●	060	5113707	141,00
MSS-E25L25-GX24-4C150300		1	●	060	5113708	141,00
MSS-E25L25-GX24-4C5070		1	●	060	5113709	138,00
MSS-E25L25-GX24-4C70100		1	●	060	5113720	141,00
MSS-E25L35-FX3.1		1	●	060	5009683	107,00
MSS-E25L90-16-E		1	●	060	5028828	163,00
MSS-E25L90-2525L		1	●	060	5009335	163,00
MSS-E25R00-16-E		1	●	060	5028824	163,00
MSS-E25R00-2525L		1	●	060	5009162	163,00
MSS-E25R03-GX16-2		1	●	060	5009591	104,00
MSS-E25R12-GX16-1		1	●	060	5009571	104,00
MSS-E25R12-GX16-2		1	●	060	5009573	104,00
MSS-E25R12-GX16-3		1	●	060	5009575	104,00
MSS-E25R12-GX16-4		1	●	060	5009577	104,00
MSS-E25R15-GX24-2A100150		1	●	060	5009718	136,00
MSS-E25R15-GX24-2A5070		1	●	060	5009714	136,00
MSS-E25R15-GX24-2A70100		1	●	060	5009716	136,00
MSS-E25R15-GX24-3A100150		1	●	060	5009724	136,00
MSS-E25R15-GX24-3A150300		1	●	060	5009726	136,00
MSS-E25R15-GX24-3A5070		1	●	060	5009720	136,00
MSS-E25R15-GX24-3A70100		1	●	060	5009722	136,00
MSS-E25R15-GX24-4A100150		1	●	060	5009732	136,00
MSS-E25R15-GX24-4A150300		1	●	060	5009734	136,00
MSS-E25R15-GX24-4A5070		1	●	060	5009728	136,00
MSS-E25R15-GX24-4A70100		1	●	060	5009730	136,00
MSS-E25R21-GX24-2		1	●	060	5009597	104,00
MSS-E25R21-GX24-3		1	●	060	5009599	104,00
MSS-E25R21-GX24-3C100150		1	●	060	5113721	141,00
MSS-E25R21-GX24-3C150300		1	●	060	5113722	141,00
MSS-E25R21-GX24-3C5070		1	●	060	5113723	138,00
MSS-E25R21-GX24-3C70100		1	●	060	5113724	141,00
MSS-E25R21-GX24-4		1	●	060	5009601	104,00
MSS-E25R21-GX24-5		1	●	060	5009603	104,00
MSS-E25R25-FX3.1		1	●	060	5009676	107,00

Bezeichnung / Designation	Sorte / Grade	VE / US		Disc. Gr.	Article No.	EURO Stück / piece
MSS-E25R25-GX24-4C100150		1	●	060	5113725	**141,00**
MSS-E25R25-GX24-4C150300		1	●	060	5113726	**141,00**
MSS-E25R25-GX24-4C5070		1	●	060	5113727	**138,00**
MSS-E25R25-GX24-4C70100		1	●	060	5113728	**141,00**
MSS-E25R35-FX3.1		1	●	060	5009684	**107,00**
MSS-E25R90-16-E		1	●	060	5576680	**163,00**
MSS-E25R90-2525L		1	●	060	5009333	**163,00**
MSS-E32L00-3225N		1	●	060	5009180	**167,00**
MSS-E32L00-85-E		1	●	060	5028839	**166,00**
MSS-E32L03-GX16-2		1	●	060	5009592	**105,00**
MSS-E32L12-GX16-2		1	●	060	5009578	**105,00**
MSS-E32L12-GX16-3		1	●	060	5009580	**105,00**
MSS-E32L15-GX24-3A100150		1	●	060	5009737	**137,00**
MSS-E32L15-GX24-3A150300		1	●	060	5009739	**137,00**
MSS-E32L15-GX24-3A70100		1	●	060	5009735	**137,00**
MSS-E32L15-GX24-4A100150		1	●	060	5009742	**137,00**
MSS-E32L15-GX24-4A150300		1	●	060	5009743	**137,00**
MSS-E32L15-GX24-4A300900		1	●	060	5009748	**137,00**
MSS-E32L15-GX24-4A70100		1	●	060	5009741	**137,00**
MSS-E32L21-GX24-3		1	●	060	5009604	**105,00**
MSS-E32L21-GX24-4		1	●	060	5009606	**105,00**
MSS-E32L90-3225N		1	●	060	5009375	**167,00**
MSS-E32L90-85-E		1	●	060	5028841	**166,00**
MSS-E32R00-3225N		1	●	060	5009171	**167,00**
MSS-E32R00-85-E		1	●	060	5028838	**166,00**
MSS-E32R03-GX16-2		1	●	060	5009593	**105,00**
MSS-E32R12-GX16-2		1	●	060	5009579	**105,00**
MSS-E32R12-GX16-3		1	●	060	5009581	**105,00**
MSS-E32R15-GX24-3A100150		1	●	060	5009738	**137,00**
MSS-E32R15-GX24-3A150300		1	●	060	5009746	**137,00**
MSS-E32R15-GX24-3A70100		1	●	060	5009736	**137,00**
MSS-E32R15-GX24-4A100150		1	●	060	5009744	**137,00**
MSS-E32R15-GX24-4A150300		1	●	060	5009745	**137,00**
MSS-E32R15-GX24-4A300900		1	●	060	5009747	**137,00**
MSS-E32R15-GX24-4A70100		1	●	060	5009740	**137,00**
MSS-E32R21-GX24-3		1	●	060	5009605	**105,00**
MSS-E32R21-GX24-4		1	●	060	5009607	**105,00**
MSS-E32R90-3225N		1	●	060	5009357	**167,00**
MSS-E32R90-85-E		1	●	060	5028840	**166,00**
MSS-I16L02-GX09-1		1	●	060	5009657	**102,00**
MSS-I16L04-GX09-1		1	●	060	5009749	**102,00**
MSS-I16L04-GX09-2		1	●	060	5009751	**102,00**
MSS-I16L90-1,5D-E		1	●	060	5029064	**178,00**
MSS-I16L90-1,5D-N		1	●	060	5009528	**176,00**
MSS-I16L90-2,5D-E		1	●	060	5029046	**190,00**
MSS-I16L90-2,5D-N		1	●	060	5009530	**189,00**
MSS-I16R02-GX09-1		1	●	060	5009658	**102,00**
MSS-I16R04-GX09-1		1	●	060	5009750	**102,00**
MSS-I16R04-GX09-2		1	●	060	5009752	**102,00**
MSS-I16R90-1,5D-E		1	●	060	5029065	**178,00**
MSS-I16R90-1,5D-N		1	●	060	5009529	**176,00**
MSS-I16R90-2,5D-E		1	●	060	5029047	**190,00**
MSS-I16R90-2,5D-N		1	●	060	5009531	**189,00**
MSS-I20L02-GX09-1		1	●	060	5009659	**103,00**
MSS-I20L05-GX09-1		1	●	060	5009753	**103,00**
MSS-I20L05-GX09-2		1	●	060	5009755	**103,00**
MSS-I20L90-1,5D-E		1	●	060	5029066	**217,00**
MSS-I20L90-1,5D-N		1	●	060	5009532	**217,00**
MSS-I20L90-2,5D-E		1	●	060	5029048	**233,00**
MSS-I20L90-2,5D-N		1	●	060	5009534	**233,00**
MSS-I20R02-GX09-1		1	●	060	5009660	**103,00**
MSS-I20R05-GX09-1		1	●	060	5009754	**103,00**
MSS-I20R05-GX09-2		1	●	060	5009756	**103,00**
MSS-I20R90-1,5D-E		1	●	060	5029067	**217,00**
MSS-I20R90-1,5D-N		1	●	060	5009533	**217,00**
MSS-I20R90-2,5D-E		1	●	060	5029049	**231,00**
MSS-I20R90-2,5D-N		1	●	060	5009535	**233,00**
MSS-I25L02-GX09-1		1	●	060	5009661	**104,00**
MSS-I25L06-GX09-1		1	●	060	5009757	**104,00**
MSS-I25L06-GX09-2		1	●	060	5009759	**104,00**

Bezeichnung / Designation	Sorte / Grade	VE / US		Disc. Gr.	Article No.	EURO Stück / piece
MSS-I25L90-1,5D-E		1	●	060	5029068	**248,00**
MSS-I25L90-1,5D-N		1	●	060	5009536	**248,00**
MSS-I25L90-2,5D-E		1	●	060	5029050	**268,00**
MSS-I25L90-2,5D-N		1	●	060	5009546	**266,00**
MSS-I25R02-GX09-1		1	●	060	5009662	**104,00**
MSS-I25R06-GX09-1		1	●	060	5009758	**104,00**
MSS-I25R06-GX09-2		1	●	060	5009760	**104,00**
MSS-I25R90-1,5D-E		1	●	060	5029069	**248,00**
MSS-I25R90-1,5D-N		1	●	060	5009537	**248,00**
MSS-I25R90-2,5D-E		1	●	060	5029051	**268,00**
MSS-I25R90-2,5D-N		1	●	060	5009547	**266,00**
MSS-I32L03-GX16-2		1	●	060	5009663	**105,00**
MSS-I32L09-GX16-1		1	●	060	5009761	**105,00**
MSS-I32L09-GX16-2		1	●	060	5009763	**105,00**
MSS-I32L09-GX16-3		1	●	060	5009765	**105,00**
MSS-I32L09-GX16-4		1	●	060	5009767	**105,00**
MSS-I32L90-1,5D-E		1	●	060	5029070	**321,00**
MSS-I32L90-1,5D-N		1	●	060	5009538	**321,00**
MSS-I32L90-2,5D-E		1	●	060	5029052	**347,00**
MSS-I32L90-2,5D-N		1	●	060	5009540	**347,00**
MSS-I32R03-GX16-2		1	●	060	5009664	**105,00**
MSS-I32R09-GX16-1		1	●	060	5009762	**105,00**
MSS-I32R09-GX16-2		1	●	060	5009764	**105,00**
MSS-I32R09-GX16-3		1	●	060	5009766	**105,00**
MSS-I32R09-GX16-4		1	●	060	5009768	**105,00**
MSS-I32R90-1,5D-E		1	●	060	5029071	**321,00**
MSS-I32R90-1,5D-N		1	●	060	5009539	**321,00**
MSS-I32R90-2,5D-E		1	●	060	5029053	**347,00**
MSS-I32R90-2,5D-N		1	●	060	5009541	**338,00**
MSS-I40L03-GX16-2		1	●	060	5009665	**106,00**
MSS-I40L10-GX16-1		1	●	060	5009769	**106,00**
MSS-I40L10-GX16-2		1	●	060	5009771	**106,00**
MSS-I40L10-GX16-3		1	●	060	5009773	**106,00**
MSS-I40L10-GX16-4		1	●	060	5009775	**106,00**
MSS-I40L90-1,5D-E		1	●	060	5029072	**401,00**
MSS-I40L90-1,5D-N		1	●	060	5009542	**401,00**
MSS-I40L90-2,5D-E		1	●	060	5029054	**442,00**
MSS-I40L90-2,5D-N		1	●	060	5009544	**442,00**
MSS-I40N19-GX24-3		1	●	060	5009789	**123,00**
MSS-I40N19-GX24-4		1	●	060	5009790	**123,00**
MSS-I40R03-GX16-2		1	●	060	5009666	**106,00**
MSS-I40R10-GX16-1		1	●	060	5009770	**106,00**
MSS-I40R10-GX16-2		1	●	060	5009772	**106,00**
MSS-I40R10-GX16-3		1	●	060	5009774	**106,00**
MSS-I40R10-GX16-4		1	●	060	5009776	**106,00**
MSS-I40R90-1,5D-E		1	●	060	5029073	**401,00**
MSS-I40R90-1,5D-N		1	●	060	5009543	**401,00**
MSS-I40R90-2,5D-E		1	●	060	5029055	**442,00**
MSS-I40R90-2,5D-N		1	●	060	5009545	**442,00**
MTJNL2020K16		1	●	060	5008045	**100,00**
MTJNL2525M16		1	●	060	5008046	**106,00**
MTJNL2525M22		1	●	060	5008048	**106,00**
MTJNL3225P16		1	●	060	5008047	**117,00**
MTJNL3225P22		1	●	060	5008049	**117,00**
MTJNR2020K16		1	●	060	5008040	**100,00**
MTJNR2525M16		1	●	060	5008041	**106,00**
MTJNR2525M22		1	●	060	5008043	**106,00**
MTJNR3225P16		1	●	060	5008042	**117,00**
MTJNR3225P22		1	●	060	5008044	**117,00**
MX22-2E-EN-A60	WSM23S	5	●	021	7468465	**49,40**
MX22-2E-EN1.00ISO	WSM23S	5	●	021	8074134	**49,40**
MX22-2E-EN1.50ISO	WSM23S	5	●	021	8074135	**49,40**
MX22-2E-EN2.00ISO	WSM23S	5	●	021	8074136	**49,40**
MX22-2E050N01-GD8	WSM23S	5	●	021	7781247	**49,40**
MX22-2E080L5-CF5	WSM23S	5	●	021	7466521	**49,40**
MX22-2E080N01-CF5	WSM23S	5	●	021	7320486	**49,40**
MX22-2E100L10-CF5	WSM23S	5	●	021	7466523	**49,40**
MX22-2E100N01-CF5	WSM13S	5	●	021	7798745	**49,40**
MX22-2E100N01-CF5	WSM23S	5	●	021	7320487	**49,40**
MX22-2E100N01-GD8	WSM23S	5	●	021	7100198	**49,40**

Bezeichnung / Designation	Sorte / Grade	VE / US		Disc. Gr.	Article No.	EURO Stück / piece
MX22-2E100R10-CF5	WSM23S	5	●	021	7466522	49,40
MX22-2E104N01-CF5	WSM23S	5	●	021	7320488	49,40
MX22-2E120N01-CF5	WSM23S	5	●	021	7320489	49,40
MX22-2E140N01-CF5	WSM23S	5	●	021	7320520	49,40
MX22-2E147N01-CF5	WSM23S	5	●	021	7320521	49,40
MX22-2E150L10-CF5	WSM23S	5	●	021	7466525	49,40
MX22-2E150N01-CF5	WSM13S	5	●	021	7675846	49,40
MX22-2E150N01-CF5	WSM23S	5	●	021	7320522	49,40
MX22-2E150N01-GD8	WSM23S	5	●	021	7100210	49,40
MX22-2E150R10-CF5	WSM23S	5	●	021	7466524	49,40
MX22-2E157N02-CF5	WSM23S	5	●	021	7320523	49,40
MX22-2E157N08-RF5	WSM23S	5	●	021	7466528	49,40
MX22-2E170N02-CF5	WSM23S	5	●	021	7320524	49,40
MX22-2E170N02-GD8	WSM23S	5	●	021	7100212	49,40
MX22-2E185N02-CF5	WSM23S	5	●	021	7320525	49,40
MX22-2E196N02-CF5	WSM23S	5	●	021	7320526	49,40
MX22-2E200L6-CF5	WSM23S	5	●	021	7466527	49,40
MX22-2E200N02-CF5	WSM13S	5	●	021	7798747	49,40
MX22-2E200N02-CF5	WSM23S	5	●	021	7320527	49,40
MX22-2E200N02-GD8	WSM23S	5	●	021	7100215	49,40
MX22-2E200N10-RF5	WSM13S	5	●	021	7675847	49,40
MX22-2E200N10-RF5	WSM23S	5	●	021	7320528	49,40
MX22-2E200R6-CF5	WSM23S	5	●	021	7466526	49,40
MX22-2E224N02-CF5	WSM23S	5	●	021	7320529	49,40
MX22-2E224N02-GD8	WSM23S	5	●	021	7100216	49,40
MX22-2E239N02-CF5	WSM23S	5	●	021	7320530	49,40
MX22-2E239N12-RF5	WSM23S	5	●	021	7320531	49,40
MX22-2E250N02-CF5	WSM23S	5	●	021	7320532	49,40
MX22-2E275N02-CF5	WSM23S	5	●	021	7320533	49,40
MX22-2E275N02-GD8	WSM23S	5	●	021	7100218	49,40
MX22-2E300N02-CF5	WSM13S	5	●	021	7798748	49,40
MX22-2E300N02-CF5	WSM23S	5	●	021	7320534	49,40
MX22-2E300N02-GD8	WSM23S	5	●	021	7100219	49,40
MX22-2E300N15-RF5	WSM13S	5	●	021	7798750	49,40
MX22-2E300N15-RF5	WSM23S	5	●	021	7320535	49,40
MX22-2E318N02-CF5	WSM23S	5	●	021	7320536	49,40
MX22-2E318N02-GD8	WSM23S	5	●	021	7100220	49,40
MX22-2E318N16-RF5	WSM23S	5	●	021	7320537	49,40
MX22-2E325N02-CF5	WSM23S	5	●	021	7320538	49,40
MX22-2E325N02-GD8	WSM23S	5	●	021	7100221	49,40
MX22-2E335N	WMG30	5	■	021	7342974	37,00
MX22-2L150N01-GD8	WSM23S	5	●	021	7781248	49,40
MX22-2L200N02-GD8	WSM23S	5	●	021	7798740	49,40
MX22-2L280L01-VG8	WSM23S	5	●	021	7798744	49,40
MX22-2L300N02-GD8	WSM23S	5	●	021	7798742	49,40
MX22-2R150N01-GD8	WSM23S	5	●	021	7798708	49,40
MX22-2R200N02-GD8	WSM23S	5	●	021	7798709	49,40
MX22-2R280R01-VG8	WSM23S	5	●	021	7798743	49,40
MX22-2R300N02-GD8	WSM23S	5	●	021	7798741	49,40
MX22-4E-EN-AG60	WSM23S	5	●	021	7468463	56,80
MX22-4E-EN-AG60	WSM33S	5	●	021	7468464	56,80
MX22-4E400N02-CF5	WSM23S	5	●	021	7616798	56,80
MX22-4E400N04-CF5	WSM23S	5	●	021	7616793	56,80
MX22-4E400N20-RF5	WSM23S	5	●	021	7616794	56,80
MX22-4E425N02-CF5	WSM23S	5	●	021	7616795	56,80
MX22-4E480N06-CF5	WSM23S	5	●	021	7616799	56,80
MX22-4E500N02-CF5	WSM23S	5	●	021	7616811	56,80
MX22-4E500N04-CF5	WSM23S	5	●	021	7616812	56,80
MX22-4E500N25-RF5	WSM23S	5	●	021	7616813	56,80
MX22-4E525N02-CF5	WSM23S	5	■	021	7616796[1]	56,80
MX22-4E556N02-CF5	WSM23S	5	●	021	7616797	56,80
MX22-4E565N	WMG30	5	■	021	7100222	42,60
N20219-M2		1	●	THP	6476073	39,60
N20219-M2.5		1	●	THP	6476074	34,10
N20219-M3		1	●	THP	6476075	30,80
N20219-M4		1	●	THP	6476076	28,60
N20219-M5		1	●	THP	6476077	30,80
N20219-M6		1	●	THP	6476078	37,00
N20219-M8		1	●	THP	6476079	46,30
N20219-M10		1	●	THP	6476080	55,50

Bezeichnung / Designation	Sorte / Grade	VE / US		Disc. Gr.	Article No.	EURO Stück / piece
N205069-EGM2.5		1	●	THP	6476131	33,80
N205069-EGM3		1	●	THP	6476132	31,40
N205069-EGM4		1	●	THP	6476133	33,80
N205069-EGM5		1	●	THP	6476134	40,70
N205069-EGM6		1	●	THP	6476135	50,90
N205069-EGM8		1	●	THP	6476136	61,10
N20516-M1.6		1	●	THP	6476081	48,40
N20516-M2		1	●	THP	6476082	43,50
N20516-M2.3		1	●	THP	6476083	39,90
N20516-M2.5		1	●	THP	6476084	37,50
N20516-M3		1	●	THP	6476085	33,80
N20516-M3.5		1	●	THP	6476086	32,70
N20516-M4		1	●	THP	6476087	31,40
N20516-M5		1	●	THP	6476088	33,80
N20516-M6		1	●	THP	6476089	38,70
N20516-M8		1	●	THP	6476090	48,40
N20516-M10		1	●	THP	6476091	58,00
N205166-M3		1	●	THP	6476099	35,60
N205166-M4		1	●	THP	6476100	33,00
N205166-M5		1	●	THP	6476101	35,60
N205166-M6		1	●	THP	6476102	40,70
N205166-M7		1	●	THP	6476103	45,80
N205166-M8		1	●	THP	6476104	50,90
N205166-M10		1	●	THP	6476105	61,10
N20536-M2		1	●	THP	6476106	43,50
N20536-M2.5		1	●	THP	6476107	37,50
N20536-M3		1	●	THP	6476108	33,80
N20536-M4		1	●	THP	6476109	31,40
N20536-M5		1	●	THP	6476110	33,80
N20536-M6		1	●	THP	6476111	38,70
N20536-M8		1	●	THP	6476112	48,40
N205569-EGM10		1	●	THP	6476137	71,30
N205569-EGM12		1	●	THP	6476138	81,40
N205569-EGM16		1	●	THP	6476139	112,00
N20566-M6		1	●	THP	6476092	38,70
N20566-M8		1	●	THP	6476093	48,40
N20566-M10		1	●	THP	6476094	58,00
N20566-M12		1	●	THP	6476095	71,30
N20566-M14		1	●	THP	6476096	81,40
N20566-M16		1	●	THP	6476097	91,60
N20566-M20		1	●	THP	6476098	122,00
N21566-M8X1		1	●	THP	6476113	53,20
N21566-M10X1		1	●	THP	6476114	67,20
N21566-M12X1		1	●	THP	6476115	78,40
N21566-M12X1.5		1	●	THP	6476116	78,40
N21566-M14X1.5		1	●	THP	6476117	85,10
N21566-M16X1		1	●	THP	6476118	106,00
N21566-M16X1.5		1	●	THP	6476119	101,00
N21566-M18X1.5		1	●	THP	6476120	123,00
N21566-M20X1.5		1	●	THP	6476121	141,00
N225069-EGUNC6		1	●	THP	6476141	31,40
N225069-EGUNC8		1	●	THP	6476142	33,80
N225069-EGUNC10		1	●	THP	6476143	38,70
N225069-EGUNC1/4		1	●	THP	6476140	48,40
N22516-UNC2		1	●	THP	6476122	41,10
N22516-UNC4		1	●	THP	6476123	35,10
N22516-UNC6		1	●	THP	6476124	32,70
N22516-UNC8		1	●	THP	6476125	31,40
N22516-UNC10		1	●	THP	6476126	33,80
N22516-UNC1/4		1	●	THP	6476127	38,70
N22516-UNC5/16		1	●	THP	6476128	48,40
N22516-UNC3/8		1	●	THP	6476129	58,00
N235069-EGUNF10		1	●	THP	6476145	44,80
N235069-EGUNF1/4		1	●	THP	6476144	53,20
N24566-G1/8		1	●	THP	6476130	58,00
NCAE16-1616R-GX09-1		1	■	060	5009149[1]	262,00
NCAE20-2020L-GX16-1		1	■	060	5009153[1]	263,00
NCAE20-2020L-GX16-2		1	■	060	5009156[1]	263,00
NCAE20-2020R-GX16-1		1	●	060	5009154[2]	263,00
NCAE25-2525L-GX16-1		1	●	060	5009160[2]	266,00

Bezeichnung / Designation	Sorte / Grade	VE / US		Disc. Gr.	Article No.	EURO Stück / piece
NCAE25-2525L-GX16-2		1	●	060	5009163[1]	266,00
NCAE25-2525R-GX16-1		1	●	060	5009161[1]	266,00
NCAE25-2525R-GX16-2		1	●	060	5009164[1]	266,00
NCAE25-2525R-GX16-3		1	●	060	5009166[1]	266,00
NCAE25-C400L-GX16-2		1	●	065	5012151[1]	469,00
NCAE25-C400R-GX16-1		1	●	065	5012148[1]	469,00
NCAE25-C400R-GX16-2		1	●	065	5012150[1]	469,00
NCAE25-C400R-GX16-3		1	●	065	5012152[1]	469,00
NCAE25-C500L-GX16-1		1	●	065	5012163[1]	509,00
NCAE25-C500L-GX16-2		1	●	065	5012165[1]	509,00
NCAE25-C500R-GX16-2		1	■	065	5012164[2]	509,00
NCAE32-3225R-GX16-2		1	●	060	5009170[1]	274,00
NCAE32-3225R-GX16-3		1	■	060	5009173[2]	274,00
NCAE32-C600L-GX16-2		1	■	065	5012157[2]	573,00
NCAE32-C600R-GX16-2		1	●	065	5012156[1]	573,00
NCAI16-2015R-GX09-1		1	●	060	5009439[1]	281,00
NCAI16-2025L-GX09-1		1	■	060	5009466[2]	289,00
NCAI16-2025R-GX09-1		1	●	060	5009467[1]	289,00
NCAI16-2025R-GX09-2		1	■	060	5009469[2]	289,00
NCAI20-2015L-GX09-2		1	●	060	5009444[1]	322,00
NCAI20-2015R-GX09-1		1	●	060	5009443[1]	322,00
NCAI20-2015R-GX09-2		1	●	060	5009445[1]	322,00
NCAI20-2525L-GX09-1		1	●	060	5009471[1]	336,00
NCAI20-2525L-GX09-2		1	●	060	5009475[1]	336,00
NCAI20-2525R-GX09-1		1	●	060	5009473[1]	336,00
NCAI20-2525R-GX09-2		1	●	060	5009476[1]	336,00
NCAI25-2515L-GX09-2		1	●	060	5009448[1]	351,00
NCAI25-2515R-GX09-2		1	■	060	5009449[2]	351,00
NCAI25-3225L-GX09-1		1	●	060	5009477[1]	370,00
NCAI25-3225R-GX09-1		1	●	060	5009479[1]	370,00
NCAI25-3225R-GX09-2		1	●	060	5009482[1]	370,00
NCAI32-3215L-GX16-1		1	●	060	5009450[1]	424,00
NCAI32-3215L-GX16-2		1	●	060	5009452[1]	424,00
NCAI32-3215L-GX16-3		1	●	060	5009454[1]	424,00
NCAI32-3215R-GX16-1		1	●	060	5009451[1]	424,00
NCAI32-3215R-GX16-2		1	●	060	5009453[1]	424,00
NCAI32-3215R-GX16-3		1	●	060	5009455[1]	424,00
NCAI32-4025L-GX16-2		1	●	060	5009485[1]	453,00
NCAI32-4025L-GX16-3		1	●	060	5009487[1]	453,00
NCAI32-4025R-GX16-2		1	■	060	5009486[2]	453,00
NCAI32-4025R-GX16-3		1	●	060	5009488[1]	453,00
NCAI40-4015L-GX16-3		1	●	060	5009462[1]	506,00
NCAI40-4015L-GX24-3		1	●	060	5009548[1]	523,00
NCAI40-4015R-GX16-1		1	■	060	5009459[2]	506,00
NCAI40-4015R-GX16-2		1	■	060	5009461[2]	506,00
NCAI40-4015R-GX16-3		1	●	060	5009463[1]	506,00
NCAI40-4015R-GX16-4		1	●	060	5009465[1]	506,00
NCAI40-4015R-GX24-3		1	●	060	5009549[1]	523,00
NCAI40-4015R-GX24-4		1	●	060	5009551[1]	523,00
NCAI40-5025L-GX24-3		1	●	060	5009552[1]	564,00
NCAI40-5025L-GX24-4		1	●	060	5009554[1]	564,00
NCAI40-5025R-GX16-1		1	●	060	5009492[1]	549,00
NCAI40-5025R-GX16-2		1	■	060	5009495[2]	549,00
NCAI40-5025R-GX16-3		1	■	060	5009497[2]	549,00
NCAI40-5025R-GX24-3		1	●	060	5009553[1]	564,00
NCAI40-5025R-GX24-4		1	●	060	5009555[1]	564,00
NCBE20-2020R-GX24-2-21		1	●	060	5009192[1]	263,00
NCBE20-C300L-GX24-2-21		1	■	065	5015111[2]	470,00
NCBE25-2525L-GX24-2-21		1	●	060	5009193[1]	266,00
NCBE25-2525R-GX24-2-21		1	●	060	5009194[1]	266,00
NCBE25-2525R-GX24-3-21		1	●	060	5009196[1]	266,00
NCBE25-C400L-GX24-2-21		1	●	065	5012171[1]	469,00
NCBE25-C400L-GX24-3-21		1	■	065	5012173[2]	469,00
NCBE25-C400R-GX24-2-21		1	●	065	5012170[1]	469,00
NCBE25-C400R-GX24-3-21		1	●	065	5012172[1]	469,00
NCBE25-C400R-GX24-4-21		1	■	065	5012174[2]	469,00
NCBE32-3225R-GX24-3-21		1	●	060	5009202[1]	274,00
NCBE32-3225R-GX24-4-21		1	●	060	5009204[1]	274,00
NCBE32-C600L-GX24-3-21		1	●	065	5012179[1]	573,00
NCBE32-C600R-GX24-3-21		1	●	065	5012178[1]	573,00

Bezeichnung / Designation	Sorte / Grade	VE / US		Disc. Gr.	Article No.	EURO Stück / piece
NCBE32-C600R-GX24-4-21		1	●	065	5012180[1]	573,00
NCCE16-1616R-GX09-1		1	●	060	5009184[1]	262,00
NCCE20-2020L-GX16-2		1	■	060	5009185[2]	263,00
NCCE20-2020R-GX16-2		1	●	060	5009186[1]	263,00
NCCE25-2525L-GX16-2		1	■	060	5009187[2]	266,00
NCCI16-2025L-GX09-1		1	■	060	5009510[2]	289,00
NCCI16-2025R-GX09-1		1	●	060	5009511[1]	289,00
NCCI20-2525R-GX09-1		1	■	060	5009513[2]	336,00
NCCI40-4015R-GX16-2		1	■	060	5009509[2]	506,00
NCEE20-2020L-GX24-2-3		1	■	060	5009294[2]	295,00
NCEE20-2020R-GX24-2-2		1	●	060	5009295[1]	295,00
NCEE25-2525L-GX24-2-1		1	●	060	5009297[1]	300,00
NCEE25-2525L-GX24-2-3		1	■	060	5009301[2]	300,00
NCEE25-2525L-GX24-3-4		1	●	060	5009308[1]	300,00
NCEE25-2525R-GX24-2-1		1	●	060	5009298[1]	300,00
NCEE25-2525R-GX24-2-3		1	●	060	5009302[1]	300,00
NCEE25-2525R-GX24-3-1		1	■	060	5009304[2]	300,00
NCEE25-2525R-GX24-3-3		1	■	060	5009309[2]	300,00
NCEE25-2525R-GX24-3-4		1	●	060	5009310[1]	300,00
NCEE25-C400R-GX24-3-4		1	■	065	5012250[2]	500,00
NCEE25-C500R-GX24-2-1		1	■	065	5012260[2]	539,00
NCEE32-3225L-GX24-3-4		1	●	060	5009315[1]	304,00
NCEE32-3225L-GX24-4-5		1	●	060	5009323[1]	304,00
NCEE32-3225R-GX24-3-4		1	●	060	5009316[1]	304,00
NCEE32-3225R-GX24-4-5		1	■	060	5009322[2]	304,00
NCEE32-C600L-GX24-3-3		1	●	065	5012285[1]	601,00
NCEE32-C600L-GX24-3-4		1	●	065	5012287[1]	601,00
NCEE32-C600R-GX24-3-2		1	■	065	5012282[2]	601,00
NCEE32-C600R-GX24-3-4		1	■	065	5012286[2]	601,00
NCFE25-2525L-GX24-3-1		1	■	060	5014471[2]	301,00
NCFE25-2525L-GX24-3-1C		1	■	060	5013778[2]	301,00
NCFE25-2525L-GX24-3-3C		1	■	060	5009407[2]	304,00
NCFE25-2525L-GX24-3-4		1	●	060	5009397[1]	304,00
NCFE25-2525L-GX24-3-4C		1	■	060	5009409[2]	304,00
NCFE25-2525R-GX24-3-1C		1	●	060	5014474[1]	301,00
NCFE25-2525R-GX24-3-2C		1	●	060	5009406[1]	304,00
NCFE25-2525R-GX24-3-4C		1	■	060	5009410[2]	304,00
NCFE25-2525R-GX24-4-3C		1	●	060	5009414[1]	304,00
NCFE25-2525R-GX24-4-4		1	■	060	5009404[2]	304,00
NCFE25-2525R-GX24-4-4C		1	●	060	5009416[1]	304,00
NCFE25-C500L-GX24-3-4		1	●	065	5012563[1]	545,00
NCHE20-2020L-GX24-2-1		1	●	060	5009324[1]	295,00
NCHE20-2020L-GX24-2-2		1	●	060	5009328[1]	295,00
NCHE20-2020R-GX24-2-1		1	■	060	5009326[2]	295,00
NCHE20-2020R-GX24-2-3		1	●	060	5009331[1]	295,00
NCHE25-2525L-GX24-2-1		1	●	060	5009334[1]	300,00
NCHE25-2525L-GX24-2-3		1	●	060	5009339[1]	300,00
NCHE25-2525L-GX24-3-3		1	●	060	5009345[1]	300,00
NCHE25-2525L-GX24-3-4		1	●	060	5009347[1]	300,00
NCHE25-2525L-GX24-4-4		1	■	060	5009354[2]	300,00
NCHE25-2525R-GX24-2-1		1	●	060	5009332[1]	300,00
NCHE25-2525R-GX24-3-1		1	■	060	5009341[2]	300,00
NCHE32-C600L-GX24-3-4		1	■	065	5012345[2]	601,00
NCLE25-2525L-GX16-1		1	●	060	5198128[1]	266,00
NCLE25-2525L-GX24-3-21		1	■	060	5198571[2]	266,00
NCLE25-2525R-GX16-1		1	■	060	5198107[2]	266,00
NCLE25-C400L-GX16-3		1	●	065	5198675[1]	469,00
NCLE25-C500L-GX24-3-21		1	■	065	5198780[2]	509,00
NCLE32-C600L-GX16-2		1	■	065	5198699[2]	573,00
NCLE32-C600L-GX24-4-21		1	■	065	5198793[2]	573,00
NCLE32-C600R-GX24-4-21		1	■	065	5198792[2]	573,00
NCOE25-2525L-GX24-3-1		1	●	060	5199413[1]	301,00
NCOE25-2525L-GX24-3-3		1	■	060	5199415[2]	304,00
NCOE25-2525R-GX24-3-1		1	●	060	5199406[1]	301,00
NCOE25-2525R-GX24-3-2		1	■	060	5199408[2]	304,00
NCOE25-2525R-GX24-3-3		1	●	060	5199410[1]	304,00
NCOE25-2525R-GX24-3-4		1	●	060	5199412[1]	304,00
NCOE25-2525R-GX24-4-4		1	■	060	5199435[2]	304,00
NTS-EL-16 0.50ISO	WXM20	10	○	022	5012670	25,30
NTS-EL-16 0.60ISO	WXM20	10	○	022	5012673	25,30

Bezeichnung / Designation	Sorte / Grade	VE / US		Disc. Gr.	Article No.	EURO Stück / piece
NTS-EL-16 0.70ISO	WXM20	10	○	022	5012676	25,30
NTS-EL-16 0.75ISO	WXM20	10	○	022	5012679	25,30
NTS-EL-16 0.75ISO	WXP20	10	●	022	5012680	25,30
NTS-EL-16 0.80ISO	WXM20	10	○	022	5012685	25,30
NTS-EL-16 0.80ISO	WXP20	10	○	022	5012686	25,30
NTS-EL-16 1.00ISO	WXM20	10	●	022	5012691	25,30
NTS-EL-16 1.00ISO	WXP20	10	●	022	5012692	25,30
NTS-EL-16 1.25ISO	WXM20	10	○	022	5012697	25,30
NTS-EL-16 1.25ISO	WXP20	10	○	022	5012698	25,30
NTS-EL-16 1.50ISO	WXM20	10	●	022	5012703	25,30
NTS-EL-16 1.50ISO	WXP20	10	●	022	5012704	25,30
NTS-EL-16 1.75ISO	WXM20	10	○	022	5012709	25,30
NTS-EL-16 1.75ISO	WXP20	10	○	022	5012710	25,30
NTS-EL-16 2.00ISO	WXM20	10	●	022	5012715	25,30
NTS-EL-16 2.00ISO	WXP20	10	●	022	5012716	25,30
NTS-EL-16 2.50ISO	WXM20	10	○	022	5012721	25,30
NTS-EL-16 2.50ISO	WXP20	10	●	022	5012722	25,30
NTS-EL-16 3.00ISO	WXM20	10	○	022	5012727	25,30
NTS-EL-16 3.00ISO	WXP20	10	●	022	5012728	25,30
NTS-EL-16 AG60	WXM20	10	●	022	5894111	25,30
NTS-EL-16 AG60	WXP20	10	●	022	5894110	25,30
NTS-EL-16 G60	WXP20	10	●	022	5894188	25,30
NTS-EL-22 3.50ISO	WXM20	10	○	022	5012733	39,90
NTS-EL-22 5.00ISO	WXM20	10	■	022	5012751*	39,90
NTS-EL-22 N60	WXM20	10	●	022	5894298	39,90
NTS-EL-22 N60	WXP20	10	●	022	5894296	39,90
NTS-ER-16 0.50ISO	WXM20	10	●	022	5012877	25,30
NTS-ER-16 0.50ISO	WXP20	10	●	022	5012878	25,30
NTS-ER-16 0.60ISO	WXP20	10	●	022	5012881	25,30
NTS-ER-16 0.70ISO	WXM20	10	●	022	5012883	25,30
NTS-ER-16 0.70ISO	WXP20	10	●	022	5012884	25,30
NTS-ER-16 0.75ISO	WXM20	10	●	022	5012682	25,30
NTS-ER-16 0.75ISO	WXP20	10	●	022	5012683	25,30
NTS-ER-16 0.80ISO	WXM20	10	●	022	5012688	25,30
NTS-ER-16 0.80ISO	WXP20	10	●	022	5012689	25,30
NTS-ER-16 008UN	WXM20	10	○	022	5013243	25,30
NTS-ER-16 008W	WXM20	10	○	022	5013135	25,30
NTS-ER-16 009UN	WXM20	10	○	022	5013237	25,30
NTS-ER-16 009W	WXM20	10	○	022	5013129	25,30
NTS-ER-16 010UN	WXM20	10	○	022	5013231	25,30
NTS-ER-16 010W	WXM20	10	○	022	5013123	25,30
NTS-ER-16 011UN	WXM20	10	○	022	5013225	25,30
NTS-ER-16 011W	WXM20	10	●	022	5013117	25,30
NTS-ER-16 011W	WXP20	10	●	022	5013118	25,30
NTS-ER-16 012UN	WXM20	10	○	022	5013219	25,30
NTS-ER-16 012UN	WXP20	10	●	022	5013220	25,30
NTS-ER-16 012W	WXM20	10	○	022	5013111	25,30
NTS-ER-16 013UN	WXM20	10	○	022	5013213	25,30
NTS-ER-16 014UN	WXM20	10	○	022	5013207	25,30
NTS-ER-16 014W	WXM20	10	●	022	5013105	25,30
NTS-ER-16 014W	WXP20	10	●	022	5013106	25,30
NTS-ER-16 016UN	WXM20	10	○	022	5013201	25,30
NTS-ER-16 016UN	WXP20	10	○	022	5013202	25,30
NTS-ER-16 016W	WXM20	10	○	022	5012955	25,30
NTS-ER-16 018UN	WXM20	10	○	022	5013195	25,30
NTS-ER-16 018UN	WXP20	10	●	022	5013196	25,30
NTS-ER-16 018W	WXM20	10	○	022	5012949	25,30
NTS-ER-16 019W	WXM20	10	●	022	5012943	25,30
NTS-ER-16 019W	WXP20	10	●	022	5012944	25,30
NTS-ER-16 020UN	WXM20	10	●	022	5013189	25,30
NTS-ER-16 020W	WXM20	10	○	022	5012937	25,30
NTS-ER-16 022W	WXM20	10	○	022	5012931	25,30
NTS-ER-16 024UN	WXM20	10	○	022	5013183	25,30
NTS-ER-16 024W	WXM20	10	○	022	5012925	25,30
NTS-ER-16 026W	WXM20	10	○	022	5012919	25,30
NTS-ER-16 027UN	WXM20	10	○	022	5013177	25,30
NTS-ER-16 028UN	WXM20	10	○	022	5013171	25,30
NTS-ER-16 028W	WXM20	10	○	022	5012913	25,30
NTS-ER-16 032UN	WXM20	10	○	022	5013165	25,30
NTS-ER-16 1.00ISO	WXM20	10	●	022	5012694	25,30

Bezeichnung / Designation	Sorte / Grade	VE / US		Disc. Gr.	Article No.	EURO Stück / piece
NTS-ER-16 1.00ISO	WXP20	10	●	022	5012695	25,30
NTS-ER-16 1.25ISO	WXM20	10	●	022	5012700	25,30
NTS-ER-16 1.25ISO	WXP20	10	●	022	5012701	25,30
NTS-ER-16 1.50ISO	WXM20	10	●	022	5012706	25,30
NTS-ER-16 1.50ISO	WXP20	10	●	022	5012707	25,30
NTS-ER-16 1.75ISO	WXM20	10	●	022	5012712	25,30
NTS-ER-16 1.75ISO	WXP20	10	●	022	5012713	25,30
NTS-ER-16 2.00ISO	WXM20	10	●	022	5012718	25,30
NTS-ER-16 2.00ISO	WXP20	10	●	022	5012719	25,30
NTS-ER-16 2.50ISO	WXM20	10	●	022	5012724	25,30
NTS-ER-16 2.50ISO	WXP20	10	●	022	5012725	25,30
NTS-ER-16 3.00ISO	WXM20	10	●	022	5012730	25,30
NTS-ER-16 3.00ISO	WXP20	10	●	022	5012731	25,30
NTS-ER-16 AG60	WXM20	10	●	022	5894049	25,30
NTS-ER-16 AG60	WXP20	10	●	022	5894048	25,30
NTS-ER-16 G60	WXM20	10	●	022	5894187	25,30
NTS-ER-16 G60	WXP20	10	●	022	5894184	25,30
NTS-ER-22 3.50ISO	WXM20	10	●	022	5012736	39,90
NTS-ER-22 3.50ISO	WXP20	10	●	022	5012737	39,90
NTS-ER-22 4.00ISO	WXM20	10	●	022	5012742	39,90
NTS-ER-22 4.00ISO	WXP20	10	●	022	5012743	39,90
NTS-ER-22 4.50ISO	WXM20	10	●	022	5012748	39,90
NTS-ER-22 4.50ISO	WXP20	10	●	022	5012749	39,90
NTS-ER-22 5.00ISO	WXM20	10	●	022	5012754	39,90
NTS-ER-22 5.00ISO	WXP20	10	○	022	5012755	39,90
NTS-ER-22 N60	WXM20	10	●	022	5894295	39,90
NTS-ER-22 N60	WXP20	10	●	022	5894294	39,90
NTS-IL-11 0.75ISO	WMP32	10	○	022	6038271	25,30
NTS-IL-11 0.80ISO	WMP32	10	○	022	6038273	25,30
NTS-IL-11 1.00ISO	WMP32	10	○	022	6038276	25,30
NTS-IL-11 1.25ISO	WMP32	10	○	022	6038278	25,30
NTS-IL-11 1.50ISO	WMP32	10	○	022	6038321	25,30
NTS-IL-11 1.75ISO	WMP32	10	○	022	6038323	25,30
NTS-IL-11 2.00ISO	WMP32	10	○	022	6038325	25,30
NTS-IL-11 2.50ISO	WMP32	10	○	022	6038327	25,30
NTS-IL-11 A55	WMP32	10	○	022	6038991	25,30
NTS-IL-11 A60	WMP32	10	○	022	6038939	25,30
NTS-IL-16 0.50ISO	WXM20	10	○	022	5012769	25,30
NTS-IL-16 0.60ISO	WXM20	10	○	022	5012775	25,30
NTS-IL-16 0.70ISO	WXM20	10	○	022	5012781	25,30
NTS-IL-16 0.75ISO	WXM20	10	○	022	5012787	25,30
NTS-IL-16 0.75ISO	WXP20	10	○	022	5012788	25,30
NTS-IL-16 0.80ISO	WXM20	10	○	022	5012793	25,30
NTS-IL-16 0.80ISO	WXP20	10	○	022	5012794	25,30
NTS-IL-16 1.00ISO	WXM20	10	○	022	5012799	25,30
NTS-IL-16 1.00ISO	WXP20	10	●	022	5012800	25,30
NTS-IL-16 1.50ISO	WXM20	10	●	022	5012811	25,30
NTS-IL-16 1.50ISO	WXP20	10	●	022	5012812	25,30
NTS-IL-16 1.75ISO	WXM20	10	○	022	5012817	25,30
NTS-IL-16 1.75ISO	WXP20	10	○	022	5012818	25,30
NTS-IL-16 2.00ISO	WXM20	10	●	022	5012823	25,30
NTS-IL-16 2.00ISO	WXP20	10	●	022	5012824	25,30
NTS-IL-16 2.50ISO	WXM20	10	○	022	5012829	25,30
NTS-IL-16 2.50ISO	WXP20	10	○	022	5012830	25,30
NTS-IL-16 3.00ISO	WXM20	10	○	022	5012835	25,30
NTS-IL-16 3.00ISO	WXP20	10	●	022	5012836	25,30
NTS-IL-16 AG60	WXM20	10	●	022	5894047	25,30
NTS-IL-16 G60	WXM20	10	●	022	5894183	25,30
NTS-IL-22 4.00ISO	WXM20	10	○	022	5012847	39,90
NTS-IL-22 4.50ISO	WXM20	10	○	022	5012853	39,90
NTS-IL-22 5.00ISO	WXM20	10	○	022	5012859	39,90
NTS-IR-11 0.75ISO	WMP32	10	●	022	6038270	25,30
NTS-IR-11 0.80ISO	WMP32	10	●	022	6038272	25,30
NTS-IR-11 1.00ISO	WMP32	10	●	022	6038274	25,30
NTS-IR-11 1.25ISO	WMP32	10	●	022	6038277	25,30
NTS-IR-11 1.50ISO	WMP32	10	●	022	6038279	25,30
NTS-IR-11 1.75ISO	WMP32	10	●	022	6038322	25,30
NTS-IR-11 11UN	WMP32	10	●	022	6038902	25,30
NTS-IR-11 12UN	WMP32	10	●	022	6038900	25,30
NTS-IR-11 12W	WMP32	10	○	022	6038700	25,30

Bezeichnung / Designation	Sorte / Grade	VE / US		Disc. Gr.	Article No.	EURO Stück / piece
NTS-IR-11 14UN	WMP32	10	●	022	6038887	25,30
NTS-IR-11 14W	WMP32	10	●	022	6038698	25,30
NTS-IR-11 16UN	WMP32	10	●	022	6038885	25,30
NTS-IR-11 16W	WMP32	10	●	022	6038696	25,30
NTS-IR-11 18UN	WMP32	10	●	022	6038883	25,30
NTS-IR-11 18W	WMP32	10	●	022	6038694	25,30
NTS-IR-11 19W	WMP32	10	●	022	6038692	25,30
NTS-IR-11 2.00ISO	WMP32	10	●	022	6038324	25,30
NTS-IR-11 2.50ISO	WMP32	10	●	022	6038326	25,30
NTS-IR-11 20UN	WMP32	10	●	022	6038881	25,30
NTS-IR-11 20W	WMP32	10	●	022	6038690	25,30
NTS-IR-11 22W	WMP32	10	○	022	6038558	25,30
NTS-IR-11 24UN	WMP32	10	●	022	6038859	25,30
NTS-IR-11 24W	WMP32	10	○	022	6038392	25,30
NTS-IR-11 26W	WMP32	10	●	022	6038390	25,30
NTS-IR-11 27UN	WMP32	10	○	022	6038857	25,30
NTS-IR-11 28UN	WMP32	10	●	022	6038855	25,30
NTS-IR-11 32UN	WMP32	10	●	022	6038851	25,30
NTS-IR-11 32W	WMP32	10	○	022	6038368	25,30
NTS-IR-11 36UN	WMP32	10	●	022	6038838	25,30
NTS-IR-11 36W	WMP32	10	○	022	6038366	25,30
NTS-IR-11 40UN	WMP32	10	●	022	6038836	25,30
NTS-IR-11 48W	WMP32	10	○	022	6038363	25,30
NTS-IR-11 56UN	WMP32	10	○	022	6038832	25,30
NTS-IR-11 64UN	WMP32	10	●	022	6038707	25,30
NTS-IR-11 A55	WMP32	10	●	022	6038990	25,30
NTS-IR-11 A60	WMP32	10	●	022	6038937	25,30
NTS-IR-16 0.50ISO	WXM20	10	●	022	5012772	25,30
NTS-IR-16 0.50ISO	WXP20	10	●	022	5012773	25,30
NTS-IR-16 0.60ISO	WXM20	10	○	022	5012778	25,30
NTS-IR-16 0.70ISO	WXM20	10	○	022	5012784	25,30
NTS-IR-16 0.75ISO	WXM20	10	●	022	5012790	25,30
NTS-IR-16 0.75ISO	WXP20	10	●	022	5012791	25,30
NTS-IR-16 0.80ISO	WXM20	10	○	022	5012796	25,30
NTS-IR-16 0.80ISO	WXP20	10	○	022	5012797	25,30
NTS-IR-16 008UN	WXM20	10	○	022	5013369	25,30
NTS-IR-16 008W	WXM20	10	○	022	5013081	25,30
NTS-IR-16 009UN	WXM20	10	○	022	5013363	25,30
NTS-IR-16 009W	WXM20	10	○	022	5013075	25,30
NTS-IR-16 010UN	WXM20	10	○	022	5013357	25,30
NTS-IR-16 010W	WXM20	10	○	022	5013069	25,30
NTS-IR-16 011UN	WXM20	10	○	022	5013351	25,30
NTS-IR-16 011W	WXM20	10	●	022	5013063	25,30
NTS-IR-16 011W	WXP20	10	●	022	5013064	25,30
NTS-IR-16 012UN	WXM20	10	○	022	5013345	25,30
NTS-IR-16 012UN	WXP20	10	○	022	5013346	25,30
NTS-IR-16 012W	WXM20	10	○	022	5013057	25,30
NTS-IR-16 013UN	WXM20	10	○	022	5013321	25,30
NTS-IR-16 014UN	WXM20	10	○	022	5013339	25,30
NTS-IR-16 014W	WXM20	10	●	022	5013051	25,30
NTS-IR-16 014W	WXP20	10	●	022	5013052	25,30
NTS-IR-16 016UN	WXM20	10	○	022	5013333	25,30
NTS-IR-16 016W	WXM20	10	○	022	5013045	25,30
NTS-IR-16 018UN	WXM20	10	○	022	5013327	25,30
NTS-IR-16 018W	WXM20	10	○	022	5013039	25,30
NTS-IR-16 019W	WXM20	10	○	022	5013033	25,30
NTS-IR-16 020UN	WXM20	10	○	022	5013315	25,30
NTS-IR-16 1.00ISO	WXM20	10	●	022	5012802	25,30
NTS-IR-16 1.00ISO	WXP20	10	●	022	5012803	25,30
NTS-IR-16 1.25ISO	WXM20	10	●	022	5012808	25,30
NTS-IR-16 1.25ISO	WXP20	10	●	022	5012809	25,30
NTS-IR-16 1.50ISO	WXM20	10	●	022	5012814	25,30
NTS-IR-16 1.50ISO	WXP20	10	●	022	5012815	25,30
NTS-IR-16 1.75ISO	WXM20	10	●	022	5012820	25,30
NTS-IR-16 1.75ISO	WXP20	10	●	022	5012821	25,30
NTS-IR-16 2.00ISO	WXM20	10	●	022	5012826	25,30
NTS-IR-16 2.00ISO	WXP20	10	●	022	5012827	25,30
NTS-IR-16 2.50ISO	WXM20	10	●	022	5012832	25,30
NTS-IR-16 2.50ISO	WXP20	10	●	022	5012833	25,30
NTS-IR-16 3.00ISO	WXM20	10	●	022	5012838	25,30

Bezeichnung / Designation	Sorte / Grade	VE / US		Disc. Gr.	Article No.	EURO Stück / piece
NTS-IR-16 3.00ISO	WXP20	10	●	022	5012839	25,30
NTS-IR-16 AG60	WXM20	10	●	022	5894040	25,30
NTS-IR-16 AG60	WXP20	10	●	022	5116959	25,30
NTS-IR-16 G60	WXM20	10	●	022	5894114	25,30
NTS-IR-16 G60	WXP20	10	●	022	5894113	25,30
NTS-IR-22 3.50ISO	WXM20	10	○	022	5012844	39,90
NTS-IR-22 3.50ISO	WXP20	10	●	022	5012845	39,90
NTS-IR-22 4.00ISO	WXM20	10	○	022	5012850	39,90
NTS-IR-22 4.00ISO	WXP20	10	●	022	5012851	39,90
NTS-IR-22 4.50ISO	WXM20	10	○	022	5012856	39,90
NTS-IR-22 4.50ISO	WXP20	10	○	022	5012857	39,90
NTS-IR-22 5.00ISO	WXM20	10	●	022	5012862	39,90
NTS-IR-22 5.00ISO	WXP20	10	●	022	5012863	39,90
NTS-IR-22 N60	WXM20	10	●	022	5894382	39,90
NTS-IR-22 N60	WXP20	10	●	022	5894299	39,90
NTS-SEL1212-16		1	●	060	5011560	135,00
NTS-SEL1616-16		1	●	060	5011562	135,00
NTS-SEL2020-16		1	●	060	5011564	139,00
NTS-SEL2525-16		1	●	060	5011566	144,00
NTS-SEL2525-22		1	●	060	5011570	144,00
NTS-SEL3232-16		1	●	060	5011568	192,00
NTS-SEL3232-22		1	●	060	5011572	192,00
NTS-SEL4040-22		1	●	060	5011574	289,00
NTS-SER1212-16		1	●	060	5011561	135,00
NTS-SER1616-16		1	●	060	5011563	135,00
NTS-SER1616-3		1	●	060	5029270	144,00
NTS-SER2020-16		1	●	060	5011565	139,00
NTS-SER2525-16		1	●	060	5011567	144,00
NTS-SER2525-22		1	●	060	5011571	144,00
NTS-SER3232-16		1	●	060	5011569	192,00
NTS-SER3232-22		1	●	060	5011573	192,00
NTS-SER4040-22		1	●	060	5011575	289,00
NXA22-0		1	●	095	7981378	27,70
NXA22-1	H81	1	●	095	7967938	27,70
NXA22-2		1	●	095	7981379	27,70
NXA22-3		1	●	095	7981410	27,70
NXA22-4		1	●	095	7981411	27,70
NXA22-98		1	●	095	7981412	27,70
NXA22-99		1	●	095	7981413	27,70
O-RING 11X2		1	●	095	7206986	5,93
O-RING 15X2		1	●	095	7206987[1]	5,93
O-RING 20X2		1	●	095	6728376	5,93
O-RING 24X2 70/80		1	●	095	6730797	1,79
O-RING 27X2		1	●	095	6730795	5,93
O-RING 28,3X1,78 70/75		1	●	095	6730798	1,79
O-RING 34X2		1	●	095	7616627	5,93
O-RING 37,77X2,62 70/75		1	●	095	6730799	1,79
O-RING 47,29X2,62 70/75		1	●	095	6788161	2,07
ODHT050408-F57	WKP35G	10	●	009	7347304	25,30
ODHT050408-F57	WKP35S	10	●	009	5888135	21,03
ODHT050408-F57	WSP45G	10	●	009	7924248	22,11
ODHT0504ZZN-F57	WKP25S	10	●	009	7028024	21,03
ODHT0504ZZN-F57	WKP35G	10	●	009	7347305	25,30
ODHT0504ZZN-F57	WKP35S	10	●	009	5854976	21,03
ODHT0504ZZN-F57	WSM35G	10	●	009	8285010	22,09
ODHT0504ZZN-F57	WSM35S	10	■	009	6159556[2]	22,09
ODHT0504ZZN-F57	WSP45G	10	●	009	7924249	22,11
ODHT0504ZZN-G77	WSP45G	10	●	009	8112881	22,11
ODHT0504ZZN-G88	WK10	10	●	009	5004797	16,46
ODHT0504ZZN-G88	WXN15	10	●	009	5021651	21,03
ODHT060512-F57	WKP35G	10	●	009	7347306	32,90
ODHT060512-F57	WKP35S	10	●	009	5888136	27,40
ODHT060512-F57	WSP45G	10	●	009	7924250	28,80
ODHT0605ZZN-F57	WKP25S	10	●	009	7028025	27,40
ODHT0605ZZN-F57	WKP35G	10	●	009	7347307	32,90
ODHT0605ZZN-F57	WKP35S	10	●	009	5854978	27,40
ODHT0605ZZN-F57	WSM35G	10	●	009	8285011	28,80
ODHT0605ZZN-F57	WSM35S	10	■	009	6159558[2]	28,80
ODHT0605ZZN-F57	WSP45G	10	●	009	7924251	28,80
ODHT0605ZZN-G77	WSP45G	10	●	009	8112882	28,80

Bezeichnung / Designation	Sorte / Grade	VE / US		Disc. Gr.	Article No.	EURO Stück / piece
ODHT0605ZZN-G88	WK10	10	●	009	5004795	21,40
ODHT0605ZZN-G88	WXN15	10	●	009	5021889	27,40
ODHW050412-A57	WSN10	10	●	007	5004113	33,80
ODHW0504ZZN-A57	WAK15	10	●	009	5015818	19,17
ODHW0504ZZN-A57	WKP25S	10	●	009	6069465	19,17
ODHW0504ZZN-A57	WKP35G	10	●	009	7347311	22,99
ODHW0504ZZN-A57	WKP35S	10	●	009	5881169	19,17
ODHW060516-A57	WSN10	10	●	007	5004114	43,10
ODHW0605ZZN-A57	WAK15	10	●	009	5015819	24,86
ODHW0605ZZN-A57	WKP25S	10	●	009	6069466	24,86
ODHW0605ZZN-A57	WKP35G	10	●	009	7347313	29,80
ODHW0605ZZN-A57	WKP35S	10	●	009	5881320	24,86
ODHX0504ZZR-A57	WAK15	10	●	009	5015820	23,94
ODHX0504ZZR-A57	WHH15X	10	●	009	7960057	26,30
ODHX0504ZZR-A57	WKP35S	10	●	009	5918912	23,94
ODHX0605ZZN-A57	WAK15	10	●	009	5040143	31,20
ODHX0605ZZN-A57	WHH15X	10	●	009	7960058	34,30
ODHX0605ZZN-A88	WAK15	10	●	009	5040156	31,20
ODHX0605ZZN-A88	WHH15X	10	●	009	7960059	34,30
ODHX0605ZZN-A88	WXM15	10	●	009	5014063	31,20
ODHX0605ZZR-A57	WAK15	10	●	009	5015821	31,20
ODHX0605ZZR-A57	WHH15X	10	●	009	7960060	34,30
ODHX0605ZZR-A57	WKP35S	10	●	009	5918913	31,20
ODMT050408-D57	WKK25G	10	●	009	8284880	16,71
ODMT050408-D57	WKK25S	10	■	009	6702094*	16,71
ODMT050408-D57	WKP35G	10	●	009	7347317	19,10
ODMT050408-D57	WKP35S	10	●	009	5888139	15,92
ODMT050408-D57	WSM35G	10	●	009	8285012	16,71
ODMT050408-D57	WSM35S	10	■	009	7058537*	16,71
ODMT050408-D57	WSP45G	10	●	009	7924252	16,72
ODMT0504ZZN-D57	WKK25G	10	●	009	8284894	16,71
ODMT0504ZZN-D57	WKK25S	10	■	009	6702095*	16,71
ODMT0504ZZN-D57	WKP25S	10	●	009	6069400	15,92
ODMT0504ZZN-D57	WKP35G	10	●	009	7347318	19,10
ODMT0504ZZN-D57	WKP35S	10	●	009	5854975	15,92
ODMT0504ZZN-D57	WSM35G	10	●	009	8285013	16,71
ODMT0504ZZN-D57	WSM35S	10	■	009	6159559*	16,71
ODMT0504ZZN-D57	WSM45X	10	●	009	6841394	20,23
ODMT0504ZZN-D57	WSP45G	10	●	009	7924253	16,72
ODMT0504ZZN-F57	WKP25S	10	●	009	7923448	15,92
ODMT0504ZZN-F57	WKP35G	10	●	009	7923450	19,10
ODMT0504ZZN-F57	WKP35S	10	●	009	7923449	15,92
ODMT0504ZZN-F57	WSM35G	10	●	009	8285014	16,71
ODMT0504ZZN-F57	WSM35S	10	■	009	7923451*	16,71
ODMT0504ZZN-F57	WSP45G	10	●	009	7923452	16,72
ODMT060512-D57	WKK25G	10	●	009	8284867	21,80
ODMT060512-D57	WKK25S	10	■	009	6702096*	21,80
ODMT060512-D57	WKP35G	10	●	009	7347319	24,91
ODMT060512-D57	WKP35S	10	●	009	5888180	20,75
ODMT060512-D57	WSM35G	10	●	009	8285015	21,80
ODMT060512-D57	WSM35S	10	■	009	7058538*	21,80
ODMT060512-D57	WSP45G	10	●	009	7924254	21,80
ODMT0605ZZN-D57	WKK25G	10	●	009	8284875	21,80
ODMT0605ZZN-D57	WKK25S	10	■	009	6702097*	21,80
ODMT0605ZZN-D57	WKP25S	10	●	009	6069405	20,75
ODMT0605ZZN-D57	WKP35G	10	●	009	7347320	24,91
ODMT0605ZZN-D57	WKP35S	10	●	009	5854977	20,75
ODMT0605ZZN-D57	WSM35G	10	●	009	8285016	21,80
ODMT0605ZZN-D57	WSM35S	10	■	009	6159583*	21,80
ODMT0605ZZN-D57	WSM45X	10	●	009	6841393	26,40
ODMT0605ZZN-D57	WSP45G	10	●	009	7924255	21,80
ODMT0605ZZN-F57	WKP25S	10	●	009	7923453	20,75
ODMT0605ZZN-F57	WKP35G	10	●	009	7923455	24,91
ODMT0605ZZN-F57	WKP35S	10	●	009	7923454	20,75
ODMT0605ZZN-F57	WSM35G	10	●	009	8285017	21,80
ODMT0605ZZN-F57	WSM35S	10	■	009	7923456*	21,80
ODMT0605ZZN-F57	WSP45G	10	●	009	7923457	21,80
ODMW050408-A57	WAK15	10	●	009	5015822	14,31
ODMW050408-A57	WKK25G	10	●	009	8284892	15,03
ODMW050408-A57	WKK25S	10	■	009	6702098*	15,03

Bezeichnung / Designation	Sorte / Grade	VE / US		Disc. Gr.	Article No.	EURO Stück / piece
ODMW050408-A57	WKP25S	10	●	009	6069407	14,31
ODMW050408-A57	WKP35G	10	■	009	7347321*	17,16
ODMW050408-A57	WKP35S	10	●	009	5888183	14,31
ODMW050408T-A27	WKK25G	10	●	009	8284890	15,03
ODMW050408T-A27	WKK25S	10	■	009	6702099*	15,03
ODMW050408T-A27	WKP25S	10	●	009	6069408	14,31
ODMW050408T-A27	WKP35G	10	●	009	7347323	17,16
ODMW050408T-A27	WKP35S	10	●	009	5888181	14,31
ODMW060508-A57	WAK15	10	●	009	5015823	18,62
ODMW060508-A57	WKK25G	10	●	009	8284883	19,57
ODMW060508-A57	WKK25S	10	■	009	6702100*	19,57
ODMW060508-A57	WKP25S	10	●	009	6069409	18,62
ODMW060508-A57	WKP35G	10	●	009	7347326	22,38
ODMW060508-A57	WKP35S	10	●	009	5888184	18,62
ODMW060508T-A27	WKK25G	10	●	009	8284866	19,57
ODMW060508T-A27	WKK25S	10	■	009	6702101*	19,57
ODMW060508T-A27	WKP25S	10	●	009	6069440	18,62
ODMW060508T-A27	WKP35G	10	●	009	7347328	22,38
ODMW060508T-A27	WKP35S	10	●	009	5888182	18,62
ONHF050408-F67	WAK15	10	●	009	6389522	35,50
ONHF050408-F67	WHH15X	10	●	009	7960084	39,10
ONHF050408-F67	WKP25S	10	●	009	6389591	35,50
ONHU050408-F67	WKP35G	10	●	009	7304973	42,60
ONHU050408-F67	WSM35G	10	●	009	8285018	37,30
ONHU050408-F67	WSM35S	10	■	009	7304974*	37,30
ONMU050408-D57	WKP35G	10	●	009	7304976	32,00
ONMU050408-D57	WSP45G	10	●	009	8201925	28,00
OPHN050412-A57	WSN10	10	●	007	5004112	34,80
OPHN0504ZZN-A27	WCB80	1	●	005	5004070	94,10
OPHN0504ZZN-A57	WAK15	10	●	009	5015655	20,18
OPHN0504ZZN-A57	WKP25S	10	●	009	6070033	20,18
OPHN0504ZZN-A57	WSN10	10	●	007	5004118	34,80
OPHX0504ZZN-A57	WAK15	10	●	009	5040126	25,20
OPHX0504ZZN-A57	WHH15X	10	●	009	8159200	27,70
OPHX0504ZZN-A88	WAK15	10	●	009	5040127	25,20
OPHX0504ZZN-A88	WXM15	10	●	009	5013955	25,20
OPHX0504ZZR-A27	WCB80	1	●	005	5004071	107,00
OPHX0504ZZR-A57	WAK15	10	●	009	5015656	25,20
P20200-M1.6		1	●	THP	6435269	44,00
P20200-M2		1	●	THP	6435420	39,60
P20200-M2.2		1	●	THP	6435421	37,30
P20200-M2.5		1	●	THP	6435422	34,10
P20200-M3		1	●	THP	6149076	30,80
P20200-M3.5		1	●	THP	6149077	29,70
P20200-M4		1	●	THP	6149078	28,60
P20200-M5		1	●	THP	6149079	30,80
P20200-M6		1	●	THP	6149100	35,20
P20200-M8		1	●	THP	6149101	46,30
P20200-M10		1	●	THP	6149102	55,50
P20200-1.1	WKP35S	10	●	009	5918446	26,60
P20200-1.2	WKP35S	10	●	009	5918447	26,60
P20200-1.3	WKP35S	10	●	009	5918448	26,60
P20200-1.4	WKP35S	10	●	009	5918449	26,60
P20200-1.5	WKP35S	10	●	009	5918470	26,60
P20200-2.1	WKP35S	10	●	009	5918471	29,10
P20200-2.2	WKP35S	10	●	009	5918472	29,10
P20200-2.3	WKP35S	10	●	009	5918473	29,10
P20200-3.1	WKP35S	10	●	009	5918474	30,60
P20200-3.2	WKP35S	10	●	009	5918475	30,60
P20200-3.3	WKP35S	10	●	009	5918476	30,60
P20210-M1		1	●	THP	6159832	50,50
P20210-M1.2		1	●	THP	6159833	48,40
P20210-M1.4		1	●	THP	6159834	46,20
P20210-M1.6		1	●	THP	6159835	44,00
P20210-M1.8		1	●	THP	6159836	41,70
P20210-M2		1	●	THP	6159837	39,60
P20210-M2.2		1	●	THP	6159838	37,30
P20210-M2.3		1	●	THP	6159839	36,30
P20210-M2.5		1	●	THP	6159850	34,10
P20210-M2.6		1	●	THP	6159851	32,90

Bezeichnung / Designation	Sorte / Grade	VE / US		Disc. Gr.	Article No.	EURO Stück / piece
P20210-M3		1	●	THP	6159852	30,80
P20210-M3.5		1	●	THP	6159853	29,70
P20210-M4		1	●	THP	6159854	28,60
P20210-M4.5		1	●	THP	6159855	29,70
P20210-M5		1	●	THP	6159856	30,80
P20210-M6		1	●	THP	6159857	35,20
P2021005-M1.2	TIN	1	●	THP	6159858	60,40
P2021005-M1.4	TIN	1	●	THP	6159859	57,70
P2021005-M1.6	TIN	1	●	THP	6159860	55,00
P2021005-M2	TIN	1	●	THP	6159861	49,40
P2021005-M2.5	TIN	1	●	THP	6159862	42,60
P2021005-M3	TIN	1	●	THP	6159863	38,50
P2021005-M3.5	TIN	1	●	THP	6159864	37,10
P2021005-M4	TIN	1	●	THP	6159865	35,70
P2021005-M5	TIN	1	●	THP	6159866	38,50
P2021005-M6	TIN	1	●	THP	6159867	44,00
P202103-M4		1	●	THP	6231664	42,10
P202103-M5		1	●	THP	6231665	45,30
P202103-M6		1	●	THP	6231666	51,80
P202108-M2		1	●	THP	6149103	39,60
P202108-M3		1	●	THP	6149104	30,80
P202108-M4		1	●	THP	6149105	28,60
P202108-M5		1	●	THP	6149106	30,80
P202108-M6		1	●	THP	6149107	37,00
P202108-M8		1	●	THP	6149108	46,30
P202108-M10		1	●	THP	6149109	55,50
P20230-M2		1	●	THP	6149110	39,60
P20230-M2.3		1	●	THP	6149111	36,30
P20230-M2.5		1	●	THP	6149112	34,10
P20230-M2.6		1	●	THP	6149113	32,90
P20230-M3		1	●	THP	6149114	30,80
P20230-M3.5		1	●	THP	6149115	29,70
P20230-M4		1	●	THP	6149116	28,60
P20230-M5		1	●	THP	6149117	30,80
P2023005-M2	TIN	1	●	THP	6149118	49,40
P2023005-M2.5	TIN	1	●	THP	6149119	42,60
P2023005-M3	TIN	1	●	THP	6149120	38,50
P2023005-M3.5	TIN	1	●	THP	6149121	37,10
P2023005-M4	TIN	1	●	THP	6149122	35,70
P2023005-M5	TIN	1	●	THP	6149123	38,50
P202603-M8		1	●	THP	6220237	64,70
P202603-M10		1	●	THP	6220238	77,70
P202603-M12		1	●	THP	6220239	90,70
P202603-M14		1	●	THP	6220270	104,00
P202603-M16		1	●	THP	6220271	117,00
P202603-M20		1	●	THP	6220272	163,00
P202608-M12		1	●	THP	6149130	64,70
P202608-M16		1	●	THP	6149131	83,30
P202608-M20		1	●	THP	6149132	117,00
P203009-EGM2.5		1	●	THP	6149133	32,40
P203009-EGM3		1	●	THP	6149134	30,10
P203009-EGM4		1	●	THP	6149135	32,40
P203009-EGM5		1	●	THP	6149136	37,00
P203009-EGM6		1	●	THP	6149137	46,30
P203009-EGM8		1	●	THP	6149138	55,50
P20310-M2		1	●	THP	6149139	41,60
P20310-M2.2		1	●	THP	6149140	39,30
P20310-M2.5		1	●	THP	6149141	35,90
P20310-M3		1	●	THP	6149142	32,40
P20310-M3.5		1	●	THP	6149143	31,20
P20310-M4		1	●	THP	6149144	30,10
P20310-M5		1	●	THP	6149145	32,40
P20310-M6		1	●	THP	6149146	37,00
P20310-M7		1	●	THP	6149147	41,60
P20310-M8		1	●	THP	6149148	46,30
P20310-M10		1	●	THP	6149149	55,50
P2031005-M2	TIN	1	●	THP	6149170	52,00
P2031005-M2.2	TIN	1	●	THP	6149171	49,20
P2031005-M2.5	TIN	1	●	THP	6149172	44,80
P2031005-M3	TIN	1	●	THP	6149173	40,50

Bezeichnung / Designation	Sorte / Grade	VE / US		Disc. Gr.	Article No.	EURO Stück / piece
P2031005-M4	TIN	1	●	THP	6149174	37,60
P2031005-M5	TIN	1	●	THP	6149175	40,50
P2031005-M6	TIN	1	●	THP	6149176	46,30
P2031005-M7	TIN	1	●	THP	6149177	52,00
P2031005-M8	TIN	1	●	THP	6149178	57,80
P2031005-M10	TIN	1	●	THP	6149179	69,40
P2031006-M2	TICN	1	●	THP	6149150	57,20
P2031006-M2.5	TICN	1	●	THP	6149151	49,30
P2031006-M3	TICN	1	●	THP	6149152	44,50
P2031006-M4	TICN	1	●	THP	6149153	41,40
P2031006-M5	TICN	1	●	THP	6149154	44,50
P2031006-M6	TICN	1	●	THP	6149155	50,90
P2031006-M8	TICN	1	●	THP	6149156	63,60
P2031006-M10	TICN	1	●	THP	6149157	76,30
P203103-M3		1	●	THP	6149158	38,90
P203103-M4		1	●	THP	6149159	36,10
P203103-M5		1	●	THP	6149160	38,90
P203103-M6		1	●	THP	6149161	44,40
P203103-M8		1	●	THP	6149162	55,50
P203103-M10		1	●	THP	6149163	66,60
P2031035-M3	TIN	1	●	THP	6149164	48,60
P2031035-M4	TIN	1	●	THP	6149165	45,10
P2031035-M5	TIN	1	●	THP	6149166	48,60
P2031035-M6	TIN	1	●	THP	6149167	55,50
P2031035-M8	TIN	1	●	THP	6149168	69,40
P2031035-M10	TIN	1	●	THP	6149169	83,30
P20330-M2.5		1	●	THP	6149180	35,90
P20330-M3		1	●	THP	6149181	32,40
P20330-M3.5		1	●	THP	6149182	31,20
P20330-M4		1	●	THP	6149183	30,10
P20330-M5		1	●	THP	6149184	32,40
P20330-M6		1	●	THP	6149185	37,00
P20330-M7		1	●	THP	6149186	41,60
P20330-M8		1	●	THP	6149187	46,30
P20330-M10		1	●	THP	6149188	55,50
P2033005-M6	TIN	1	●	THP	6149189	46,30
P2033005-M8	TIN	1	●	THP	6149190	57,80
P2033005-M10	TIN	1	●	THP	6149191	69,40
P20340-M2		1	●	THP	6149192	41,60
P20340-M2.5		1	●	THP	6149193	35,90
P20340-M2.6		1	●	THP	6149194	34,70
P20340-M3		1	●	THP	6149195	32,40
P20340-M3.5		1	●	THP	6149196	31,20
P20340-M4		1	●	THP	6149197	30,10
P20340-M5		1	●	THP	6149198	32,40
P20340-M6		1	●	THP	6149199	37,00
P20340-M8		1	●	THP	6149200	46,30
P20340-M10		1	●	THP	6149201	55,50
P2034005-M2	TIN	1	●	THP	6149202	52,00
P2034005-M2.5	TIN	1	●	THP	6149203	44,80
P2034005-M3	TIN	1	●	THP	6149204	40,50
P2034005-M3.5	TIN	1	●	THP	6149205	39,00
P2034005-M4	TIN	1	●	THP	6149206	37,60
P2034005-M5	TIN	1	●	THP	6149207	40,50
P2034005-M6	TIN	1	●	THP	6149208	46,30
P2034005-M8	TIN	1	●	THP	6149209	57,80
P2034005-M10	TIN	1	●	THP	6149210	69,40
P203509-EGM10		1	●	THP	6149211	64,70
P203509-EGM12		1	●	THP	6149212	74,00
P203509-EGM16		1	●	THP	6149213	102,00
P20360-M2		1	●	THP	6149214	41,60
P20360-M2.5		1	●	THP	6149215	35,90
P20360-M3		1	●	THP	6149216	32,40
P20360-M4		1	●	THP	6149217	30,10
P20360-M5		1	●	THP	6149218	32,40
P20360-M6		1	●	THP	6149219	37,00
P20360-M7		1	●	THP	6149220	41,60
P20360-M8		1	●	THP	6149221	46,30
P20360-M9		1	●	THP	6149222	50,90
P20360-M10		1	●	THP	6149223	55,50

Bezeichnung / Designation	Sorte / Grade	VE / US		Disc. Gr.	Article No.	EURO Stück / piece
P20360-M12		1	●	THP	6149224	**64,70**
P20360-M14		1	●	THP	6149225	**74,00**
P20360-M16		1	●	THP	6149226	**83,30**
P20360-M18		1	●	THP	6149227	**102,00**
P20360-M20		1	●	THP	6149228	**117,00**
P20360-M22		1	●	THP	6149229	**136,00**
P20360-M24		1	●	THP	6149230	**155,00**
P20360-M27		1	●	THP	6149231	**214,00**
P20360-M30		1	●	THP	6149232	**253,00**
P20360-M33		1	●	THP	6149233	**291,00**
P20360-M36		1	●	THP	6149234	**350,00**
P20360-M39		1	●	THP	6149235	**408,00**
P20360-M42		1	●	THP	6149236	**486,00**
P20360-M45		1	●	THP	6149237	**573,00**
P20360-M48		1	●	THP	6149238	**661,00**
P20360-M52		1	●	THP	6149239	**777,00**
P20360-M56		1	●	THP	6149240	**894,00**
P2036005-M6	TIN	1	●	THP	6149241	**46,30**
P2036005-M8	TIN	1	●	THP	6149242	**57,80**
P2036005-M10	TIN	1	●	THP	6149243	**69,40**
P2036005-M12	TIN	1	●	THP	6149244	**81,00**
P2036005-M14	TIN	1	●	THP	6149245	**92,50**
P2036005-M16	TIN	1	●	THP	6149246	**104,00**
P2036005-M18	TIN	1	●	THP	6149247	**127,00**
P2036005-M20	TIN	1	●	THP	6149248	**146,00**
P2036005-M24	TIN	1	●	THP	6149249	**194,00**
P2036005-M27	TIN	1	●	THP	6149250	**267,00**
P2036005-M30	TIN	1	●	THP	6149251	**316,00**
P2036005-M36	TIN	1	●	THP	6149252	**437,00**
P2036006-M6	TICN	1	●	THP	6149253	**50,90**
P2036006-M8	TICN	1	●	THP	6149254	**63,60**
P2036006-M10	TICN	1	●	THP	6149255	**76,30**
P2036006-M12	TICN	1	●	THP	6149256	**89,00**
P2036006-M16	TICN	1	●	THP	6149257	**115,00**
P2036006-M20	TICN	1	●	THP	6319508	**133,00**
P2036006-M24	TICN	1	●	THP	6149258	**214,00**
P2036006-M30	TICN	1	●	THP	6149259	**347,00**
P203603-M3		1	●	THP	6382875	**38,90**
P203603-M4		1	●	THP	6382876	**36,10**
P203603-M5		1	●	THP	6149260	**38,90**
P203603-M6		1	●	THP	6149261	**44,40**
P203603-M8		1	●	THP	6149262	**55,50**
P203603-M10		1	●	THP	6149263	**66,60**
P203603-M12		1	●	THP	6149264	**77,70**
P203603-M14		1	●	THP	6149265	**88,80**
P203603-M16		1	●	THP	6149266	**99,90**
P203603-M20		1	●	THP	6149267	**140,00**
P2036035-M5	TIN	1	●	THP	6149268	**48,60**
P2036035-M6	TIN	1	●	THP	6149269	**55,50**
P2036035-M8	TIN	1	●	THP	6149270	**69,40**
P2036035-M10	TIN	1	●	THP	6149271	**83,30**
P2036035-M12	TIN	1	●	THP	6149272	**97,10**
P2036035-M14	TIN	1	●	THP	6149273	**111,00**
P2036035-M16	TIN	1	●	THP	6149274	**125,00**
P2036035-M20	TIN	1	●	THP	6149275	**175,00**
P20380-M5		1	●	THP	6149276	**32,40**
P20380-M6		1	●	THP	6149277	**37,00**
P20380-M8		1	●	THP	6149278	**46,30**
P20380-M10		1	●	THP	6149279	**55,50**
P20380-M12		1	●	THP	6149280	**64,70**
P20380-M14		1	●	THP	6149281	**74,00**
P20380-M16		1	●	THP	6149282	**83,30**
P20380-M20		1	●	THP	6149284	**117,00**
P20380-M24		1	●	THP	6149285	**155,00**
P20390-M12		1	●	THP	6149286	**64,70**
P20390-M16		1	●	THP	6149287	**83,30**
P20390-M20		1	●	THP	6149288	**117,00**
P2039005-M12	TIN	1	●	THP	6149289	**81,00**
P2039005-M16	TIN	1	●	THP	6149290	**104,00**
P2039005-M20	TIN	1	●	THP	6149291	**146,00**

Bezeichnung / Designation	Sorte / Grade	VE / US		Disc. Gr.	Article No.	EURO Stück / piece
P20509-M2		1	●	THP	6244442	**45,80**
P20509-M2.5		1	●	THP	6244443	**39,50**
P20509-M3		1	●	THP	6244444	**35,60**
P20509-M4		1	●	THP	6244445	**33,00**
P20509-M5		1	●	THP	6244446	**35,60**
P20509-M6		1	●	THP	6244447	**40,70**
P20509-M7		1	●	THP	6244448	**45,80**
P20509-M8		1	●	THP	6244449	**50,90**
P20509-M10		1	●	THP	6244450	**61,10**
P205099-EGM2.5		1	●	THP	6244421	**35,60**
P205099-EGM3		1	●	THP	6244422	**33,00**
P205099-EGM4		1	●	THP	6244423	**35,60**
P205099-EGM5		1	●	THP	6244424	**40,70**
P205099-EGM6		1	●	THP	6244425	**50,90**
P205099-EGM8		1	●	THP	6244426	**61,10**
P205183-M3		1	●	THP	6268343	**35,60**
P205183-M4		1	●	THP	6268344	**33,00**
P205183-M5		1	●	THP	6268345	**35,60**
P205183-M6		1	●	THP	6268346	**40,70**
P205183-M8		1	●	THP	6268347	**50,90**
P205183-M10		1	●	THP	6268348	**61,10**
P2051832-M3	THL	1	●	THP	6244463	**49,00**
P2051832-M4	THL	1	●	THP	6244464	**45,50**
P2051832-M5	THL	1	●	THP	6244465	**49,00**
P2051832-M6	THL	1	●	THP	6244466	**56,00**
P2051832-M8	THL	1	●	THP	6244467	**70,00**
P2051832-M10	THL	1	●	THP	6244468	**84,00**
P20519-M1.6		1	●	THP	6244427	**48,40**
P20519-M2		1	●	THP	6244428	**45,80**
P20519-M2.2		1	●	THP	6244429	**43,30**
P20519-M2.5		1	●	THP	6244430	**39,50**
P20519-M2.6		1	●	THP	6244431	**38,20**
P20519-M3		1	●	THP	6244432	**35,60**
P20519-M3.5		1	●	THP	6244433	**34,30**
P20519-M4		1	●	THP	6244469	**33,00**
P20519-M4.5		1	●	THP	6244434	**34,30**
P20519-M5		1	●	THP	6244470	**35,60**
P20519-M6		1	●	THP	6244471	**40,70**
P20519-M7		1	●	THP	6244435	**45,80**
P20519-M8		1	●	THP	6244472	**50,90**
P20519-M10		1	●	THP	6244473	**61,10**
P2051905-M2	TIN	1	●	THP	6244474	**57,20**
P2051905-M2.5	TIN	1	●	THP	6244475	**49,30**
P2051905-M3	TIN	1	●	THP	6244476	**44,50**
P2051905-M3.5	TIN	1	●	THP	6244477	**42,90**
P2051905-M4	TIN	1	●	THP	6244478	**41,40**
P2051905-M5	TIN	1	●	THP	6244479	**44,50**
P2051905-M6	TIN	1	●	THP	6244480	**50,90**
P2051905-M8	TIN	1	●	THP	6244481	**63,60**
P2051905-M10	TIN	1	●	THP	6244482	**76,30**
P2051935-M3		1	●	THP	6244436	**49,90**
P2051935-M4		1	●	THP	6244437	**46,30**
P2051935-M5		1	●	THP	6244438	**49,90**
P2051935-M6		1	●	THP	6244439	**57,00**
P2051935-M8		1	●	THP	6244440	**71,20**
P2051935-M10		1	●	THP	6244441	**85,50**
P205198-M3		1	●	THP	6244451	**35,60**
P205198-M4		1	●	THP	6244452	**33,00**
P205198-M5		1	●	THP	6244453	**35,60**
P205198-M6		1	●	THP	6244454	**40,70**
P205198-M8		1	●	THP	6244455	**50,90**
P205198-M10		1	●	THP	6244456	**61,10**
P20539-M2		1	●	THP	6244483	**45,80**
P20539-M2.3		1	●	THP	6244484	**42,00**
P20539-M2.5		1	●	THP	6244485	**39,50**
P20539-M3		1	●	THP	6244486	**35,60**
P20539-M3.5		1	●	THP	6244487	**34,30**
P20539-M4		1	●	THP	6244488	**33,00**
P20539-M5		1	●	THP	6244489	**35,60**
P20539-M6		1	●	THP	6244490	**40,70**

Bezeichnung / Designation	Sorte / Grade	VE / US		Disc. Gr.	Article No.	EURO Stück / piece
P20539-M8		1	●	THP	6244491	50,90
P20539-M10		1	●	THP	6244492	61,10
P2053905-M2.5	TIN	1	●	THP	6244493	49,30
P2053905-M3	TIN	1	●	THP	6244494	44,50
P2053905-M4	TIN	1	●	THP	6244495	41,40
P2053905-M5	TIN	1	●	THP	6244496	44,50
P2053905-M6	TIN	1	●	THP	6244497	50,90
P2053905-M8	TIN	1	●	THP	6244498	63,60
P2053905-M10	TIN	1	●	THP	6244499	76,30
P20549-M2		1	●	THP	6244500	45,80
P20549-M2.5		1	●	THP	6244501	39,50
P20549-M3		1	●	THP	6244502	35,60
P20549-M4		1	●	THP	6244503	33,00
P20549-M5		1	●	THP	6244504	35,60
P20549-M6		1	●	THP	6244505	40,70
P20549-M8		1	●	THP	6244506	50,90
P20549-M10		1	●	THP	6244507	61,10
P2054905-M3	TIN	1	●	THP	6244508	44,50
P2054905-M4	TIN	1	●	THP	6244509	41,40
P2054905-M5	TIN	1	●	THP	6244510	44,50
P2054905-M6	TIN	1	●	THP	6244511	50,90
P2054905-M8	TIN	1	●	THP	6244512	63,60
P2054905-M10	TIN	1	●	THP	6244513	76,30
P205599-EGM10		1	●	THP	6244514	74,80
P205599-EGM12		1	●	THP	6244515	85,50
P205599-EGM14		1	●	THP	6244516	96,20
P205599-EGM16		1	●	THP	6244517	112,00
P205599-EGM20		1	●	THP	6244518	160,00
P205599-EGM24		1	●	THP	6244519	256,00
P205683-M8		1	●	THP	6268349	50,90
P205683-M10		1	●	THP	6268370	61,10
P205683-M12		1	●	THP	6268371	71,30
P205683-M14		1	●	THP	6268372	81,40
P205683-M16		1	●	THP	6268373	91,60
P205683-M20		1	●	THP	6268374	128,00
P2056832-M8	THL	1	●	THP	6244545	70,00
P2056832-M10	THL	1	●	THP	6244546	84,00
P2056832-M12	THL	1	●	THP	6244547	98,00
P2056832-M14	THL	1	●	THP	6244548	112,00
P2056832-M16	THL	1	●	THP	6244549	126,00
P2056832-M20	THL	1	●	THP	6244550	176,00
P20569-M4		1	●	THP	6244520	33,00
P20569-M5		1	●	THP	6244521	35,60
P20569-M6		1	●	THP	6244551	40,70
P20569-M8		1	●	THP	6244552	50,90
P20569-M9		1	●	THP	6244522	56,00
P20569-M10		1	●	THP	6244553	61,10
P20569-M11		1	●	THP	6244523	66,20
P20569-M12		1	●	THP	6244554	71,30
P20569-M14		1	●	THP	6244555	81,40
P20569-M16		1	●	THP	6244556	91,60
P20569-M18		1	●	THP	6244557	112,00
P20569-M20		1	●	THP	6244558	128,00
P20569-M22		1	●	THP	6244559	150,00
P20569-M24		1	●	THP	6244560	171,00
P20569-M27		1	●	THP	6244561	235,00
P20569-M30		1	●	THP	6244562	278,00
P20569-M33		1	●	THP	6244563	321,00
P20569-M36		1	●	THP	6244828	385,00
P20569-M39		1	●	THP	6244564	449,00
P20569-M42		1	●	THP	6244829	534,00
P20569-M45		1	●	THP	6244565	630,00
P20569-M48		1	●	THP	6244830	727,00
P20569-M52		1	●	THP	6244566	896,00
P20569-M56		1	●	THP	6244567	1.030,00
P20569-M60		1	●	THP	6244568	1.164,00
P20569-M64		1	●	THP	6244569	1.358,00
P2056905-M12	TIN	1	●	THP	6244570	89,00
P2056905-M14	TIN	1	●	THP	6258246	102,00
P2056905-M16	TIN	1	●	THP	6244571	115,00

Bezeichnung / Designation	Sorte / Grade	VE / US		Disc. Gr.	Article No.	EURO Stück / piece
P2056905-M18	TIN	1	●	THP	6258247	134,00
P2056905-M20	TIN	1	●	THP	6244572	160,00
P2056905-M24	TIN	1	●	THP	6244573	214,00
P2056905-M30	TIN	1	●	THP	6244574	347,00
P2056935-M8		1	●	THP	6244524	71,20
P2056935-M10		1	●	THP	6244525	85,50
P2056935-M12		1	●	THP	6244526	99,70
P2056935-M14		1	●	THP	6244527	114,00
P2056935-M16		1	●	THP	6244528	128,00
P2056935-M18		1	●	THP	6244529	157,00
P2056935-M20		1	●	THP	6244530	180,00
P205698-M12		1	●	THP	6244533	74,80
P205698-M14		1	●	THP	6244534	85,50
P205698-M16		1	●	THP	6244535	96,20
P205698-M20		1	●	THP	6244536	128,00
P205698-M24		1	●	THP	6244537	171,00
P205698-M30		1	●	THP	6244538	278,00
P20589-M5		1	●	THP	6244575	35,60
P20589-M6		1	●	THP	6244576	40,70
P20589-M8		1	●	THP	6244577	50,90
P20589-M10		1	●	THP	6244578	61,10
P20589-M12		1	●	THP	6244579	74,80
P20589-M14		1	●	THP	6244580	85,50
P20589-M16		1	●	THP	6244581	96,20
P2058905-M12	TIN	1	●	THP	6244582	93,50
P2058905-M16	TIN	1	●	THP	6244583	120,00
P20599-M8		1	●	THP	6244584	50,90
P20599-M10		1	●	THP	6244585	61,10
P20599-M12		1	●	THP	6244586	74,80
P20599-M16		1	●	THP	6244587	96,20
P20599-M20		1	●	THP	6244588	128,00
P20599-M24		1	■	THP	6244589*	171,00
P2059905-M12	TIN	1	●	THP	6244590	93,50
P2059905-M16	TIN	1	●	THP	6244591	120,00
P2059905-M20	TIN	1	●	THP	6244592	160,00
P2059905-M24	TIN	1	●	THP	6244593	214,00
P21210-M2X0.25		1	●	THP	6149292	43,50
P21210-M3X0.25		1	●	THP	6149296	33,80
P21210-M3X0.35		1	●	THP	6149297	33,80
P21210-M4X0.35		1	●	THP	6149299	31,40
P21210-M4X0.5		1	●	THP	6149300	31,40
P21210-M5X0.5		1	●	THP	6149302	35,60
P21210-M5X0.75		1	●	THP	6149303	35,60
P21210-M6X0.5		1	●	THP	6149304	40,70
P21210-M6X0.75		1	●	THP	6149305	40,70
P21210-M7X0.75		1	●	THP	6149306	45,80
P21210-M8X1		1	●	THP	6149307	50,90
P21210-M10X1		1	●	THP	6149308	61,10
P21210-M2.2X0.25		1	●	THP	6149293	41,10
P21210-M2.3X0.25		1	●	THP	6149294	39,90
P21210-M2.5X0.35		1	●	THP	6149295	37,50
P21210-M3.5X0.35		1	●	THP	6149298	32,70
P21210-M4.5X0.5		1	●	THP	6149301	32,70
P212608-M8X1		1	●	THP	6149309	50,90
P212608-M10X1		1	●	THP	6149310	61,10
P212608-M12X1		1	●	THP	6149311	74,80
P212608-M12X1.5		1	●	THP	6149312	74,80
P212608-M14X1.5		1	●	THP	6149313	85,50
P212608-M16X1		1	●	THP	6149314	96,20
P212608-M16X1.5		1	●	THP	6149315	96,20
P212608-M18X1.5		1	●	THP	6149316	112,00
P212608-M20X1.5		1	●	THP	6149317	128,00
P21360-M4X0.5		1	●	THP	6149318	33,00
P21360-M5X0.5		1	●	THP	6149319	35,60
P21360-M6X0.5		1	●	THP	6149320	40,70
P21360-M6X0.75		1	●	THP	6149321	40,70
P21360-M8X0.5		1	●	THP	6149322	50,90
P21360-M8X0.75		1	●	THP	6149323	50,90
P21360-M8X1		1	●	THP	6149324	50,90
P21360-M9X1		1	●	THP	6149325	56,00

Bezeichnung / Designation	Sorte / Grade	VE / US		Disc. Gr.	Article No.	EURO Stück / piece
P21360-M10X0.5		1	●	THP	6149326	61,10
P21360-M10X0.75		1	●	THP	6149327	61,10
P21360-M10X1		1	●	THP	6149328	61,10
P21360-M10X1.25		1	●	THP	6149329	61,10
P21360-M12X0.5		1	●	THP	6149330	74,80
P21360-M12X1		1	●	THP	6149331	74,80
P21360-M12X1.25		1	●	THP	6149332	74,80
P21360-M12X1.5		1	●	THP	6149333	74,80
P21360-M14X1		1	●	THP	6149334	85,50
P21360-M14X1.25		1	●	THP	6149335	85,50
P21360-M14X1.5		1	●	THP	6149336	85,50
P21360-M16X1		1	●	THP	6149337	96,20
P21360-M16X1.5		1	●	THP	6149338	96,20
P21360-M18X1		1	●	THP	6149339	112,00
P21360-M18X1.5		1	●	THP	6149340	112,00
P21360-M18X2		1	●	THP	6149341	112,00
P21360-M20X1		1	●	THP	6149342	128,00
P21360-M20X1.5		1	●	THP	6149343	128,00
P21360-M20X2		1	●	THP	6149344	128,00
P21360-M22X1		1	●	THP	6149345	150,00
P21360-M22X1.5		1	●	THP	6149346	150,00
P21360-M22X2		1	●	THP	6149347	150,00
P21360-M24X1		1	●	THP	6149348	171,00
P21360-M24X1.5		1	●	THP	6149349	171,00
P21360-M24X2		1	●	THP	6149350	171,00
P21360-M25X1.5		1	●	THP	6149351	192,00
P21360-M26X1.5		1	●	THP	6149352	214,00
P21360-M27X1		1	●	THP	6149353	235,00
P21360-M27X1.5		1	●	THP	6149354	235,00
P21360-M27X2		1	●	THP	6149355	235,00
P21360-M28X1.5		1	●	THP	6149356	256,00
P21360-M30X1		1	●	THP	6149357	278,00
P21360-M30X1.5		1	●	THP	6149358	278,00
P21360-M30X2		1	●	THP	6149359	278,00
P21360-M32X1.5		1	●	THP	6149360	299,00
P21360-M32X2		1	●	THP	6149361	299,00
P21360-M33X1.5		1	●	THP	6149362	321,00
P21360-M33X2		1	●	THP	6149363	321,00
P21360-M35X1.5		1	●	THP	6149364	363,00
P21360-M36X1.5		1	●	THP	6149365	385,00
P21360-M36X2		1	●	THP	6149366	385,00
P21360-M36X3		1	●	THP	6149367	385,00
P21360-M38X1.5		1	●	THP	6149368	448,00
P21360-M39X2		1	●	THP	6149369	449,00
P21360-M40X1.5		1	●	THP	6149370	493,00
P21360-M40X2		1	●	THP	6149371	470,00
P21360-M42X1.5		1	●	THP	6149372	560,00
P21360-M42X2		1	●	THP	6149373	534,00
P21360-M42X3		1	●	THP	6149374	534,00
P21360-M45X1.5		1	●	THP	6149375	660,00
P21360-M48X1.5		1	●	THP	6149376	761,00
P21360-M48X3		1	●	THP	6149377	727,00
P21360-M50X1.5		1	●	THP	6149378	828,00
P2136005-M5X0.5	TIN	1	●	THP	6149379	44,50
P2136005-M6X0.5	TIN	1	●	THP	6149380	50,90
P2136005-M6X0.75	TIN	1	●	THP	6149382	50,90
P2136005-M8X0.5	TIN	1	●	THP	6149381	63,60
P2136005-M8X0.75	TIN	1	●	THP	6149384	63,60
P2136005-M8X1	TIN	1	●	THP	6149383	63,60
P2136005-M10X1	TIN	1	●	THP	6149385	76,30
P2136005-M10X1.25	TIN	1	●	THP	6149386	76,30
P2136005-M12X1	TIN	1	●	THP	6149387	93,50
P2136005-M12X1.5	TIN	1	●	THP	6149388	93,50
P2136005-M14X1.5	TIN	1	●	THP	6149389	107,00
P2136005-M16X1.5	TIN	1	●	THP	6149390	120,00
P2136005-M18X1.5	TIN	1	●	THP	6149391	140,00
P2136005-M20X1.5	TIN	1	●	THP	6149392	160,00
P2136005-M22X1.5	TIN	1	●	THP	6149393	187,00
P2136005-M24X1.5	TIN	1	●	THP	6149394	214,00
P2136005-M24X2	TIN	1	●	THP	6149395	214,00

Bezeichnung / Designation	Sorte / Grade	VE / US		Disc. Gr.	Article No.	EURO Stück / piece
P2136005-M27X2	TIN	1	●	THP	6149396	294,00
P2136005-M30X1.5	TIN	1	●	THP	6149397	347,00
P2136005-M30X2	TIN	1	●	THP	6149398	347,00
P21380-M4X0.5		1	●	THP	6149399	33,00
P21380-M5X0.5		1	●	THP	6149400	35,60
P21380-M6X0.5		1	●	THP	6149401	40,70
P21380-M6X0.75		1	●	THP	6149402	40,70
P21380-M8X0.75		1	●	THP	6149403	50,90
P21380-M8X1		1	●	THP	6149404	50,90
P21380-M10X1		1	●	THP	6149405	61,10
P21380-M10X1.25		1	●	THP	6149407	61,10
P21380-M12X1		1	●	THP	6149406	74,80
P21380-M12X1.25		1	●	THP	6149408	74,80
P21380-M12X1.5		1	●	THP	6149409	74,80
P21380-M14X1.5		1	●	THP	6149410	85,50
P21380-M16X1.5		1	●	THP	6149411	96,20
P21380-M18X1.5		1	●	THP	6149412	112,00
P21380-M20X1.5		1	●	THP	6149413	128,00
P21380-M22X1.5		1	●	THP	6149414	150,00
P21380-M24X1.5		1	●	THP	6149415	171,00
P2138005-M8X1	TIN	1	●	THP	6149416	63,60
P2138005-M10X1	TIN	1	●	THP	6149417	76,30
P2138005-M12X1	TIN	1	●	THP	6149418	93,50
P2138005-M12X1.5	TIN	1	●	THP	6149419	93,50
P2138005-M14X1.5	TIN	1	●	THP	6149420	107,00
P2138005-M16X1.5	TIN	1	●	THP	6149421	120,00
P21519-M3X0.25		1	●	THP	6244595	39,20
P21519-M3X0.35		1	●	THP	6244596	39,20
P21519-M4X0.35		1	●	THP	6244597	36,40
P21519-M4X0.5		1	●	THP	6244598	36,40
P21519-M5X0.5		1	●	THP	6244600	39,20
P21519-M6X0.5		1	●	THP	6244601	44,80
P21519-M6X0.75		1	●	THP	6244602	44,80
P21519-M7X0.75		1	●	THP	6244603	50,40
P21519-M8X1		1	●	THP	6244604	56,00
P21519-M10X1		1	●	THP	6244605	67,20
P21519-M2.5X0.35		1	●	THP	6244594	43,40
P21519-M4.5X0.5		1	●	THP	6244599	37,80
P215599-EGM8X1		1	●	THP	6244606	67,20
P215599-EGM10X1		1	●	THP	6244607	78,40
P215599-EGM12X1.5		1	●	THP	6244608	94,00
P215599-EGM14X1.5		1	●	THP	6244609	106,00
P215599-EGM16X1.5		1	●	THP	6244610	123,00
P21569-M8X0.75		1	●	THP	6244611	56,00
P21569-M8X1		1	●	THP	6244612	56,00
P21569-M9X1		1	●	THP	6244613	61,60
P21569-M10X0.75		1	●	THP	6244614	67,20
P21569-M10X1		1	●	THP	6244615	67,20
P21569-M10X1.25		1	●	THP	6244616	67,20
P21569-M12X1		1	●	THP	6244617	82,30
P21569-M12X1.25		1	●	THP	6244618	82,30
P21569-M12X1.5		1	●	THP	6244638	82,30
P21569-M14X1		1	●	THP	6244619	94,00
P21569-M14X1.25		1	●	THP	6244620	94,00
P21569-M14X1.5		1	●	THP	6244639	94,00
P21569-M16X1		1	●	THP	6244621	106,00
P21569-M16X1.5		1	●	THP	6244640	106,00
P21569-M18X1		1	●	THP	6244622	123,00
P21569-M18X1.5		1	●	THP	6244641	123,00
P21569-M20X1		1	●	THP	6244623	141,00
P21569-M20X1.5		1	●	THP	6244642	141,00
P21569-M20X2		1	●	THP	6244643	141,00
P21569-M22X1		1	●	THP	6244624	165,00
P21569-M22X1.5		1	●	THP	6244644	165,00
P21569-M22X2		1	●	THP	6244645	165,00
P21569-M24X1		1	●	THP	6244625	197,00
P21569-M24X1.5		1	●	THP	6244646	197,00
P21569-M24X2		1	●	THP	6244647	197,00
P21569-M26X1.5		1	●	THP	6244648	246,00
P21569-M27X1.5		1	●	THP	6244626	271,00

Bezeichnung / Designation	Sorte / Grade	VE / US		Disc. Gr.	Article No.	EURO Stück / piece
P21569-M27X2		1	●	THP	6244649	271,00
P21569-M30X1.5		1	●	THP	6244650	320,00
P21569-M30X2		1	●	THP	6244651	320,00
P21569-M32X1.5		1	●	THP	6244652	345,00
P21569-M33X1.5		1	●	THP	6244653	369,00
P21569-M33X2		1	●	THP	6244654	369,00
P21569-M36X1.5		1	●	THP	6244655	443,00
P21569-M36X2		1	●	THP	6244656	443,00
P21569-M36X3		1	●	THP	6244657	443,00
P21569-M38X1.5		1	●	THP	6244658	493,00
P21569-M39X2		1	●	THP	6244659	517,00
P21569-M39X3		1	●	THP	6244660	517,00
P21569-M40X1.5		1	●	THP	6244661	542,00
P21569-M42X1.5		1	●	THP	6244662	644,00
P21569-M42X2		1	●	THP	6244663	644,00
P21569-M42X3		1	●	THP	6244664	644,00
P21569-M45X1.5		1	●	THP	6244665	760,00
P21569-M48X1.5		1	●	THP	6244666	875,00
P21569-M48X2		1	●	THP	6244667	875,00
P21569-M48X3		1	●	THP	6244668	875,00
P21569-M52X3		1	●	THP	6244670	1.030,00
P2156905-M8X1	TIN	1	●	THP	6244627	70,00
P2156905-M10X1	TIN	1	●	THP	6244628	84,00
P2156905-M10X1.25	TIN	1	●	THP	6244629	84,00
P2156905-M12X1	TIN	1	●	THP	6244630	103,00
P2156905-M12X1.25	TIN	1	●	THP	6244631	103,00
P2156905-M12X1.5	TIN	1	●	THP	6244632	103,00
P2156905-M14X1.5	TIN	1	●	THP	6244633	118,00
P2156905-M16X1.5	TIN	1	●	THP	6244634	132,00
P2156905-M18X1.5	TIN	1	●	THP	6244635	154,00
P2156905-M20X1.5	TIN	1	●	THP	6244636	176,00
P2156905-M22X1.5	TIN	1	●	THP	6244637	206,00
P21589-M8X1		1	●	THP	6244671	56,00
P21589-M10X1		1	●	THP	6244672	67,20
P21589-M12X1		1	●	THP	6244673	82,30
P21589-M12X1.5		1	●	THP	6244674	82,30
P21589-M14X1.5		1	●	THP	6244675	94,00
P21589-M16X1.5		1	●	THP	6244676	106,00
P2158905-M8X1	TIN	1	●	THP	6244679	70,00
P2158905-M10X1	TIN	1	●	THP	6244680	84,00
P2158905-M12X1	TIN	1	●	THP	6244681	103,00
P2158905-M12X1.5	TIN	1	●	THP	6244682	103,00
P2158905-M14X1.5	TIN	1	●	THP	6244683	118,00
P2158905-M16X1.5	TIN	1	●	THP	6244684	132,00
P2158905-M18X1.5	TIN	1	●	THP	6244685	154,00
P22200-UNC2		1	●	THP	6382879	37,30
P22200-UNC4		1	●	THP	6382900	31,90
P22200-UNC6		1	●	THP	6382901	29,70
P22200-UNC8		1	●	THP	6382902	28,60
P22210-UNC2		1	●	THP	6149422	37,30
P22210-UNC4		1	●	THP	6149423	31,90
P22210-UNC6		1	●	THP	6149424	29,70
P22210-UNC8		1	●	THP	6149425	28,60
P223009-EGUNC6		1	●	THP	6149427	30,10
P223009-EGUNC8		1	●	THP	6149428	32,40
P223009-EGUNC10		1	●	THP	6149429	37,00
P223009-EGUNC1/4		1	●	THP	6149426	46,30
P22310-UNC2		1	●	THP	6149431	39,30
P22310-UNC4		1	●	THP	6149433	33,50
P22310-UNC5		1	●	THP	6149434	32,40
P22310-UNC6		1	●	THP	6149436	31,20
P22310-UNC8		1	●	THP	6149437	30,10
P22310-UNC10		1	●	THP	6149438	32,40
P22310-UNC12		1	●	THP	6149439	32,40
P22310-UNC1/4		1	●	THP	6149430	37,00
P22310-UNC5/16		1	●	THP	6149435	46,30
P22310-UNC3/8		1	●	THP	6149432	55,50
P2231005-UNC6	TIN	1	●	THP	6149440	39,00
P22360-UNC7/16		1	●	THP	6149445	60,10
P22360-UNC1/2		1	●	THP	6149442	64,70

Bezeichnung / Designation	Sorte / Grade	VE / US		Disc. Gr.	Article No.	EURO Stück / piece
P22360-UNC9/16		1	●	THP	6149447	74,00
P22360-UNC5/8		1	●	THP	6149444	83,30
P22360-UNC3/4		1	●	THP	6149443	104,00
P22360-UNC7/8		1	●	THP	6149446	130,00
P22360-UNC1		1	●	THP	6149441	167,00
P22360-UNC1.1/8		1	●	THP	6149450	233,00
P22360-UNC1.1/4		1	●	THP	6149449	272,00
P22360-UNC1.1/2		1	●	THP	6149448	389,00
P2236005-UNC1/2	TIN	1	●	THP	6149451	81,00
P2236005-UNC5/8	TIN	1	●	THP	6149453	104,00
P2236005-UNC3/4	TIN	1	●	THP	6149452	130,00
P22509-UNC2		1	●	THP	6244702	43,30
P22509-UNC3		1	●	THP	6244703	39,50
P22509-UNC4		1	●	THP	6244705	36,90
P22509-UNC6		1	●	THP	6244707	34,30
P22509-UNC8		1	●	THP	6244708	33,00
P22509-UNC10		1	●	THP	6244709	35,60
P22509-UNC1/4		1	●	THP	6244701	40,70
P22509-UNC5/16		1	●	THP	6244706	50,90
P22509-UNC3/8		1	●	THP	6244704	61,10
P225099-EGUNC6		1	●	THP	6244687	33,00
P225099-EGUNC8		1	●	THP	6244688	35,60
P225099-EGUNC10		1	●	THP	6244689	40,70
P225099-EGUNC1/4		1	●	THP	6244686	50,90
P22519-UNC2		1	●	THP	6244691	43,30
P22519-UNC3		1	●	THP	6244692	39,50
P22519-UNC4		1	●	THP	6244694	36,90
P22519-UNC5		1	●	THP	6244695	35,60
P22519-UNC6		1	●	THP	6244697	34,30
P22519-UNC8		1	●	THP	6244698	33,00
P22519-UNC10		1	●	THP	6244699	35,60
P22519-UNC12		1	●	THP	6244700	35,60
P22519-UNC1/4		1	●	THP	6244690	40,70
P22519-UNC5/16		1	●	THP	6244696	50,90
P22519-UNC3/8		1	●	THP	6244693	61,10
P22559-UNC5/16		1	●	THP	6244724	50,90
P22559-UNC3/8		1	●	THP	6244723	61,10
P22559-UNC7/16		1	●	THP	6244726	66,20
P22559-UNC1/2		1	●	THP	6244721	74,80
P22559-UNC9/16		1	●	THP	6244728	85,50
P22559-UNC5/8		1	●	THP	6244725	96,20
P22559-UNC3/4		1	●	THP	6244722	120,00
P22559-UNC7/8		1	●	THP	6244727	150,00
P22559-UNC1		1	●	THP	6244720	192,00
P22559-UNC1.1/4		1	●	THP	6244729	299,00
P22569-UNC7/16		1	●	THP	6244714	66,20
P22569-UNC1/2		1	●	THP	6244711	74,80
P22569-UNC9/16		1	●	THP	6244716	85,50
P22569-UNC5/8		1	●	THP	6244713	96,20
P22569-UNC3/4		1	●	THP	6244712	120,00
P22569-UNC7/8		1	●	THP	6244715	150,00
P22569-UNC1		1	●	THP	6244710	192,00
P22569-UNC1.1/8		1	●	THP	6244719	256,00
P22569-UNC1.1/4		1	●	THP	6244718	299,00
P22569-UNC1.1/2		1	●	THP	6244717	427,00
P23200-UNF4		1	●	THP	6382905	35,10
P23200-UNF6		1	●	THP	6382906	32,70
P23200-UNF8		1	●	THP	6382907	31,40
P23200-UNF10		1	●	THP	6382908	33,80
P23200-UNF12		1	●	THP	6382909	35,60
P23200-UNF1/4		1	●	THP	6382903	40,70
P23210-UNF0		1	●	THP	6149454	49,50
P23210-UNF1		1	●	THP	6149455	45,90
P23210-UNF2		1	●	THP	6149457	41,10
P23210-UNF3		1	●	THP	6149458	37,50
P23210-UNF4		1	●	THP	6149459	35,10
P23210-UNF6		1	●	THP	6149460	32,70
P23210-UNF8		1	●	THP	6149461	31,40
P23210-UNF10		1	●	THP	6149462	33,80
P23210-UNF12		1	●	THP	6149463	35,60

Bezeichnung / Designation	Sorte / Grade	VE / US		Disc. Gr.	Article No.	EURO Stück / piece
P23210-UNF1/4		1	●	THP	6149456	40,70
P2321005-UNF1/4	TIN	1	●	THP	6149464	50,90
P233009-EGUNF6		1	●	THP	6149468	33,00
P233009-EGUNF8		1	●	THP	6149469	35,60
P233009-EGUNF10		1	●	THP	6149470	40,70
P233009-EGUNF1/4		1	●	THP	6149466	50,90
P233509-EGUNF5/16		1	●	THP	6149473	61,10
P233509-EGUNF3/8		1	●	THP	6149472	71,30
P233509-EGUNF7/16		1	●	THP	6149474	80,10
P233509-EGUNF1/2		1	●	THP	6149471	85,50
P23360-UNF5/16		1	●	THP	6149479	50,90
P23360-UNF3/8		1	●	THP	6149478	61,10
P23360-UNF7/16		1	●	THP	6149481	66,20
P23360-UNF1/2		1	●	THP	6149476	74,80
P23360-UNF9/16		1	●	THP	6149483	85,50
P23360-UNF5/8		1	●	THP	6149480	96,20
P23360-UNF3/4		1	●	THP	6149477	120,00
P23360-UNF7/8		1	●	THP	6149482	150,00
P23360-UNF1		1	●	THP	6149475	192,00
P23360-UNF1.1/8		1	●	THP	6149486	256,00
P23360-UNF1.1/4		1	●	THP	6149485	299,00
P23360-UNF1.3/8		1	●	THP	6149487	363,00
P23360-UNF1.1/2		1	●	THP	6149484	427,00
P2336005-UNF5/16	TIN	1	●	THP	6149491	63,60
P2336005-UNF3/8	TIN	1	●	THP	6149490	76,30
P2336005-UNF7/16	TIN	1	●	THP	6149493	82,70
P2336005-UNF1/2	TIN	1	●	THP	6149488	93,50
P2336005-UNF5/8	TIN	1	●	THP	6149492	120,00
P2336005-UNF3/4	TIN	1	●	THP	6149489	150,00
P233602-UNEF1/4		1	●	THP	6149495	44,40
P233602-UNEF5/16		1	●	THP	6149498	55,50
P233602-UNEF3/8		1	●	THP	6149497	66,60
P233602-UNEF7/16		1	●	THP	6149500	72,20
P233602-UNEF1/2		1	●	THP	6149494	81,60
P233602-UNEF9/16		1	●	THP	6149502	93,30
P233602-UNEF5/8		1	●	THP	6149499	105,00
P233602-UNEF11/16		1	●	THP	6149503	122,00
P233602-UNEF3/4		1	●	THP	6149496	131,00
P233602-UNEF7/8		1	●	THP	6149501	163,00
P235099-EGUNF6		1	●	THP	6244731	36,40
P235099-EGUNF8		1	●	THP	6244732	39,20
P235099-EGUNF10		1	●	THP	6244733	44,80
P235099-EGUNF1/4		1	●	THP	6244730	56,00
P23519-UNF1		1	●	THP	6244734	53,20
P23519-UNF2		1	●	THP	6244736	47,60
P23519-UNF3		1	●	THP	6244737	43,40
P23519-UNF4		1	●	THP	6244738	40,60
P23519-UNF5		1	●	THP	6244739	39,20
P23519-UNF6		1	●	THP	6244740	37,80
P23519-UNF8		1	●	THP	6244741	36,40
P23519-UNF10		1	●	THP	6244742	39,20
P23519-UNF12		1	●	THP	6244743	39,20
P23519-UNF1/4		1	●	THP	6244735	44,80
P2351905-UNF10	TIN	1	●	THP	6244745	49,00
P2351905-UNF1/4	TIN	1	●	THP	6244744	56,00
P2352-1R	WKP25S	10	●	009	7028028	27,30
P2352-1R	WKP35S	10	●	009	5918905	27,30
P2352-2R	WKP35S	10	●	009	5918906	36,10
P2352-2R	WPM	10	●	009	5004733	25,30
P23522-1R	WKP35S	10	●	009	5918910	33,40
P235599-EGUNF5/16		1	●	THP	6244748	67,20
P235599-EGUNF3/8		1	●	THP	6244747	78,40
P235599-EGUNF7/16		1	●	THP	6244749	88,20
P235599-EGUNF1/2		1	●	THP	6244746	94,00
P23569-UNF5/16		1	●	THP	6244754	56,00
P23569-UNF3/8		1	●	THP	6244753	67,20
P23569-UNF7/16		1	●	THP	6244756	72,70
P23569-UNF1/2		1	●	THP	6244751	82,30
P23569-UNF9/16		1	●	THP	6244758	94,00
P23569-UNF5/8		1	●	THP	6244755	106,00

Bezeichnung / Designation	Sorte / Grade	VE / US		Disc. Gr.	Article No.	EURO Stück / piece
P23569-UNF3/4		1	●	THP	6244752	132,00
P23569-UNF7/8		1	●	THP	6244757	165,00
P23569-UNF1		1	●	THP	6244750	222,00
P23569-UNF1.1/8		1	●	THP	6244761	296,00
P23569-UNF1.1/4		1	●	THP	6244760	345,00
P23569-UNF1.3/8		1	●	THP	6244762	419,00
P23569-UNF1.1/2		1	●	THP	6244759	493,00
P2356905-UNF5/16	TIN	1	●	THP	6244766	70,00
P2356905-UNF3/8	TIN	1	●	THP	6244765	84,00
P2356905-UNF7/16	TIN	1	●	THP	6244768	91,00
P2356905-UNF1/2	TIN	1	●	THP	6244763	103,00
P2356905-UNF9/16	TIN	1	●	THP	6244770	118,00
P2356905-UNF5/8	TIN	1	●	THP	6244767	132,00
P2356905-UNF3/4	TIN	1	●	THP	6244764	165,00
P2356905-UNF7/8	TIN	1	●	THP	6244769	206,00
P235692-UNEF1/4		1	●	THP	6244773	48,90
P235692-UNEF5/16		1	●	THP	6244776	61,10
P235692-UNEF3/8		1	●	THP	6244775	73,30
P235692-UNEF7/16		1	●	THP	6244778	79,40
P235692-UNEF1/2		1	●	THP	6244772	89,80
P235692-UNEF9/16		1	●	THP	6244780	103,00
P235692-UNEF5/8		1	●	THP	6244777	115,00
P235692-UNEF11/16		1	●	THP	6244781	135,00
P235692-UNEF3/4		1	●	THP	6244774	144,00
P235692-UNEF7/8		1	●	THP	6244779	180,00
P235692-UNEF1		1	●	THP	6244771	242,00
P23696-1.0	WKP25S	10	●	004	6072487	27,00
P23696-1.0	WKP35G	10	●	004	7347294	32,40
P23696-1.0	WKP35S	10	●	004	5690456	27,00
P23696-1.0	WSM35G	10	●	004	8285019	28,30
P23696-1.0	WSM35S	10	■	004	6159588*	28,30
P23696-1.0	WSP45G	10	●	004	7924256	28,30
P23696-2.0	WKP25S	10	●	004	6072488	33,70
P23696-2.0	WKP35G	10	●	004	7347296	40,50
P23696-2.0	WKP35S	10	●	004	5882880	33,70
P23696-2.0	WSM35G	10	●	004	8285020	35,40
P23696-2.0	WSM35S	10	■	004	6159590*	35,40
P23696-2.0	WSP45G	10	●	004	7924257	35,40
P24360-G1/8		1	●	THP	6149507	50,00
P24360-G1/4		1	●	THP	6149506	62,40
P24360-G3/8		1	●	THP	6149510	78,70
P24360-G1/2		1	●	THP	6149505	105,00
P24360-G5/8		1	●	THP	6149511	122,00
P24360-G3/4		1	●	THP	6149509	175,00
P24360-G7/8		1	●	THP	6149512	227,00
P24360-G1		1	●	THP	6149504	262,00
P24360-G1.1/4		1	●	THP	6149514	437,00
P24360-G1.1/2		1	●	THP	6149513	623,00
P24360-G2		1	●	THP	6149508	953,00
P2436005-G1/8	TIN	1	●	THP	6149519	62,40
P2436005-G1/4	TIN	1	●	THP	6149518	78,00
P2436005-G3/8	TIN	1	●	THP	6149521	98,40
P2436005-G1/2	TIN	1	●	THP	6149517	131,00
P2436005-G3/4	TIN	1	●	THP	6149520	219,00
P2436005-G1	TIN	1	●	THP	6149516	328,00
P24569-G1/8		1	●	THP	6244785	55,00
P24569-G1/4		1	●	THP	6244784	72,10
P24569-G3/8		1	●	THP	6244788	86,60
P24569-G1/2		1	●	THP	6244783	115,00
P24569-G5/8		1	●	THP	6244789	135,00
P24569-G3/4		1	●	THP	6244787	202,00
P24569-G7/8		1	●	THP	6244790	262,00
P24569-G1		1	●	THP	6244782	302,00
P24569-G1.1/8		1	●	THP	6244793	403,00
P24569-G1.1/4		1	●	THP	6244792	527,00
P24569-G1.1/2		1	●	THP	6244791	716,00
P24569-G1.3/4		1	●	THP	6244794	906,00
P24569-G2		1	●	THP	6244786	1.095,00
P2456905-G1/8	TIN	1	●	THP	6244798	68,70
P2456905-G1/4	TIN	1	●	THP	6244797	90,20

Bezeichnung / Designation	Sorte / Grade	VE / US		Disc. Gr.	Article No.	EURO Stück / piece
P2456905-G3/8	TIN	1	●	THP	6244800	108,00
P2456905-G1/2	TIN	1	●	THP	6244796	144,00
P2456905-G3/4	TIN	1	●	THP	6244799	252,00
P2456905-G1	TIN	1	●	THP	6244795	378,00
P26300-0601-D61	WSM37G	10	●	TII	8414222	23,92
P26300-0601-D61	WSM37S	10	●	TII	7493807*	22,78
P26300-0601-D67	WSM37G	10	●	TII	8414226	23,92
P26300-0601-D67	WSM37S	10	●	TII	6953368*	22,78
P26300-0602-D61	WSM37G	10	●	TII	8414217	23,92
P26300-0602-D61	WSM37S	10	●	TII	7493808*	22,78
P26300-0602-D67	WSM37G	10	●	TII	8414227	23,92
P26300-0602-D67	WSM37S	10	●	TII	6953369*	22,78
P26300-0901-D61	WSM37G	10	●	TII	8414219	25,20
P26300-0901-D61	WSM37S	10	●	TII	7493809*	24,00
P26300-0901-D67	WSM37G	10	●	TII	8414220	25,20
P26300-0901-D67	WSM37S	10	●	TII	7356304*	24,00
P26300-0902-D61	WSM37G	10	●	TII	8414228	25,20
P26300-0902-D61	WSM37S	10	●	TII	7493810*	24,00
P26300-0902-D67	WSM37G	10	●	TII	8414229	25,20
P26300-0902-D67	WSM37S	10	●	TII	6953380*	24,00
P26300-1101-D61	WSM37G	10	●	TII	8414213	27,70
P26300-1101-D61	WSM37S	10	●	TII	7493811*	26,40
P26300-1102-D61	WSM37G	10	●	TII	8414218	27,70
P26300-1102-D61	WSM37S	10	●	TII	7493812*	26,40
P26300-1102-D67	WSM37G	10	●	TII	8414225	27,70
P26300-1102-D67	WSM37S	10	●	TII	7013083*	26,40
P26300-1401-D61	WSM37G	10	●	TII	8414212	31,50
P26300-1401-D61	WSM37S	10	●	TII	7493813*	30,00
P26300-1401-D67	WSM37G	10	●	TII	8414215	31,50
P26300-1401-D67	WSM37S	10	●	TII	7356305*	30,00
P26300-1402-D61	WSM37G	10	●	TII	8414214	31,50
P26300-1402-D61	WSM37S	10	●	TII	7493814*	30,00
P26300-1402-D67	WSM37G	10	●	TII	8414221	31,50
P26300-1402-D67	WSM37S	10	●	TII	7356306*	30,00
P26300-1404-D61	WSM37G	10	●	TII	8414223	31,50
P26300-1404-D61	WSM37S	10	●	TII	7493815*	30,00
P26300-1404-D67	WSM37G	10	●	TII	8414224	31,50
P26300-1404-D67	WSM37S	10	●	TII	7013084*	30,00
P26300-2204-D61	WSM37G	10	●	TII	8414210	49,40
P26300-2204-D61	WSM37S	10	●	TII	7566139*	47,10
P26310-09G11-D61	WSM37G	10	●	TII	8414216	19,39
P26310-09G11-D61	WSM37S	10	●	TII	7566170*	18,44
P26310-14G11-D61	WSM37G	10	●	TII	8414211	24,23
P26310-14G11-D61	WSM37S	10	●	TII	7566171*	23,08
P26315R10	WKP25S	10	●	009	6071595	16,83
P26315R10	WKP35S	10	●	009	5918420	16,83
P26315R10	WSP45G	10	●	009	8112883	17,68
P26315R12	WKP25S	10	●	009	6071597	17,89
P26315R12	WKP35S	10	●	009	5918421	17,89
P26315R12	WSP45G	10	●	009	8112884	18,79
P26315R15	WKP25S	10	●	009	6071619	18,95
P26315R15	WKP35S	10	●	009	5918423	18,95
P26315R15	WSP45G	10	●	009	8112885	19,90
P26315R16	WKP25S	10	●	009	6071643	18,95
P26315R16	WKP35S	10	●	009	5918425	18,95
P26315R16	WSP45G	10	●	009	8112886	19,90
P26315R19.05	WKP35S	10	●	009	5918426	20,02
P26315R20	WKP25S	10	●	009	6071644	20,02
P26315R20	WKP35S	10	●	009	5918427	20,02
P26315R20	WSP45G	10	●	009	8112887	21,02
P26315R25	WKP25S	10	●	009	6071646	21,05
P26315R25	WKP35S	10	●	009	5918428	21,05
P26315R25	WSP45G	10	●	009	8112888	22,11
P26315R31	WKP25S	10	●	009	6071649	23,17
P26315R31	WKP35S	10	●	009	5918440	23,17
P26315R31	WSP45G	10	●	009	8112889	24,34
P26325R31	WKP25S	10	●	009	6071654	23,17
P26325R31	WKP35S	10	●	009	5918442	23,17
P26325R31	WSP45G	10	●	009	8112890	24,34
P26335R10	WKP35G	10	●	009	7347360	20,23

Bezeichnung / Designation	Sorte / Grade	VE / US		Disc. Gr.	Article No.	EURO Stück / piece
P26335R10	WKP35S	10	●	009	5888066	16,83
P26335R10	WSM35G	10	●	009	8285021	17,68
P26335R10	WSM35S	10	■	009	6159591*	17,68
P26335R10	WSP45G	10	●	009	7924258	17,70
P26335R14	WKP25S	10	●	009	6071662	18,95
P26335R14	WKP35G	10	●	009	7347361	22,75
P26335R14	WKP35S	10	●	009	5888067	18,95
P26335R14	WSM35G	10	●	009	8285022	19,90
P26335R14	WSM35S	10	■	009	6161402*	19,90
P26335R14	WSP45G	10	●	009	7924259	19,91
P26335R25	WKP25S	10	●	009	6071664	21,05
P26335R25	WKP35G	10	●	009	7347363	25,30
P26335R25	WKP35S	10	●	009	5888068	21,05
P26335R25	WSM35G	10	●	009	8285023	22,11
P26335R25	WSM35S	10	■	009	6161404*	22,11
P26335R25	WSP45G	10	●	009	7924260	22,13
P26337R10	WKP35G	10	●	009	7347373	20,23
P26337R10	WKP35S	10	●	009	5888069	16,83
P26337R10	WSP45G	10	●	009	8112891	17,68
P26337R14	WKP35G	10	●	009	7347374	22,75
P26337R14	WKP35S	10	●	009	5888130	18,95
P26337R14	WSP45G	10	●	009	8112892	19,90
P26337R25	WKP25S	10	●	009	6071681	21,05
P26337R25	WKP35G	10	●	009	7347376	25,30
P26337R25	WKP35S	10	●	009	5888131	21,05
P26337R25	WSP45G	10	●	009	8112893	22,11
P26339R10	WKP35G	10	●	009	7347377	20,23
P26339R10	WKP35S	10	●	009	5888132	16,83
P26339R10	WSM35G	10	●	009	8285024	17,68
P26339R10	WSM35S	10	■	009	6161405*	17,68
P26339R10	WSP45G	10	●	009	7924261	17,70
P26339R14	WKP35G	10	●	009	7347378	22,75
P26339R14	WKP35S	10	●	009	5888133	18,95
P26339R14	WSM35G	10	●	009	8285025	19,90
P26339R14	WSM35S	10	■	009	6161407*	19,90
P26339R14	WSP45G	10	●	009	7924262	19,90
P26339R25	WKP25S	10	●	009	6071688	21,05
P26339R25	WKP35G	10	●	009	7347382	25,30
P26339R25	WKP35S	10	●	009	5888134	21,05
P26339R25	WSM35G	10	●	009	8285026	22,11
P26339R25	WSM35S	10	■	009	6161408*	22,11
P26339R25	WSP45G	10	●	009	7924263	22,13
P26379-R10	WSP45G	10	●	009	7924264	17,70
P26379-R14	WKP35G	10	●	009	7347385	22,75
P26379-R14	WKP35S	10	●	009	5923537	18,95
P26379-R14	WSP45G	10	●	009	7924265	19,91
P26379-R25	WKP35G	10	●	009	7347387	25,30
P26379-R25	WKP35S	10	●	009	5923538	21,05
P26379-R25	WSP45G	10	●	009	7924266	22,13
P265676-UN1.1/8		1	●	THP	6244804	290,00
P265676-UN1.1/4		1	●	THP	6244803	339,00
P265676-UN1.3/8		1	●	THP	6244806	411,00
P265676-UN1.1/2		1	●	THP	6244802	484,00
P265676-UN1.5/8		1	●	THP	6244807	632,00
P265676-UN1.3/4		1	●	THP	6244805	746,00
P265676-UN1.7/8		1	●	THP	6244808	859,00
P265676-UN2		1	●	THP	6244801	935,00
P265676-UN2.1/4		1	●	THP	6244809	1.163,00
P2700-0	WKM	10	●	009	5004605	12,62
P2700-0	WPM	10	●	009	5004606	12,62
P2700-0	WTL71	10	●	009	5005029	16,76
P2700-3R	WKM	10	●	009	5004611	13,64
P2700-3R	WTL71	10	●	009	5005030	17,29
P2701-3R	WKM	10	●	009	5004613	10,14
P2701-3R	WPM	10	●	009	5004826	10,14
P2706-3R	WKM	10	●	009	5004677	18,53
P2707-3R	WKM	10	●	009	5004680	12,62
P2707-3R	WPM	10	●	009	5004830	12,62
P2707-3R	WTL71	10	●	009	5005749	15,99
P2707-4R	WKM	10	●	009	5004622	13,98

Bezeichnung / Designation	Sorte / Grade	VE / US		Disc. Gr.	Article No.	EURO Stück / piece
P2707-4R	WPM	10	●	009	5004832	13,98
P27201-3R	WKM	10	●	009	5004615	18,07
P27215-00	WKM	10	●	009	5004705	10,54
P27215-00	WTL71	10	●	009	5005021	13,51
P27215-3R	WKM	10	●	009	5004709	11,63
P27215-3R	WTL71	10	●	009	5005697	14,31
P27261-4R	WKM	10	●	009	5004617	27,80
P27275-3R	WTL71	10	●	009	5005689	19,82
P27275-4R	WTL71	10	●	009	5005072	22,54
P27475-0	WTL74	10	■	019	5004386*	11,26
P27475-000	WTL74	10	■	019	5021705*	12,18
P27475-1	WTL74	10	■	019	5004388*	14,07
P27475-1.5	WTL74	10	■	019	5021702*	17,34
P27475-2	WTL74	10	■	019	5004390*	17,34
P27475-2.5	WTL74	10	■	019	5021703*	22,56
P27475-3	WTL74	10	■	019	5004392*	22,60
P27477-2	WAP35	10	●	019	5030140	17,34
P27479-3	WAP35	10	■	019	5030149*	22,56
P2792-1	WKM	10	●	009	5004715	20,88
P2792-1	WXN15	10	●	009	5024159	25,90
P2808-1	WKM	10	●	009	5004696	17,63
P2809-1	WKM	10	●	009	5004692	9,14
P2809-1	WPM	10	●	009	5013451	9,14
P2809-1	WTL71	10	●	009	5005754	12,66
P28210-BSW1/8		1	●	THP	6149523	32,30
P28210-BSW3/16		1	●	THP	6149524	32,30
P28210-BSW1/4		1	●	THP	6149522	38,90
P28210-BSW5/16		1	●	THP	6149526	48,60
P28210-BSW3/8		1	●	THP	6149525	58,30
P28360-BSW7/16		1	●	THP	6149531	63,10
P28360-BSW1/2		1	●	THP	6149528	68,00
P28360-BSW5/8		1	●	THP	6149530	87,40
P28360-BSW3/4		1	●	THP	6149529	115,00
P28360-BSW7/8		1	●	THP	6149532	143,00
P28360-BSW1		1	●	THP	6149527	184,00
P2840S-1N-A57	WKP25S	10	●	019	6863841	15,74
P2840S-1N-A57	WKP35S	10	●	019	6863877	15,74
P2840S-1N-A57	WSP45G	10	●	019	7969002	16,56
P2840S-1N-A57	WXP40	10	■	019	6864011*	14,61
P2840S-1N-E67	WK40	10	●	019	7487731	11,23
P2840S-1N-E67	WKP35S	10	●	019	6863892	15,74
P2840S-1N-E67	WSP45G	10	●	019	7969007	16,56
P2840S-1N-E67	WXP40	10	■	019	6864016*	14,61
P2840S-1N-E77	WN15	10	●	019	8272932	12,89
P2840S-1N-E77	WNN15	10	●	019	8087896	18,18
P2840S-2N-A57	WKP25S	10	●	019	6863842	15,74
P2840S-2N-A57	WKP35S	10	●	019	6863878	15,74
P2840S-2N-A57	WSP45G	10	●	019	7969003	16,56
P2840S-2N-A57	WXP40	10	■	019	6864012*	14,61
P2840S-2N-E67	WK40	10	●	019	7487732	11,23
P2840S-2N-E67	WKP35S	10	●	019	6863893	15,74
P2840S-2N-E67	WSP45G	10	●	019	7969008	16,56
P2840S-2N-E67	WXP40	10	■	019	6864017*	14,61
P2840S-2N-E77	WN15	10	●	019	8272933	12,89
P2840S-2N-E77	WNN15	10	●	019	8087897	18,18
P2840S-3N-A57	WKP25S	10	●	019	6863843	15,74
P2840S-3N-A57	WKP35S	10	●	019	6863879	15,74
P2840S-3N-A57	WSP45G	10	●	019	7969004	16,56
P2840S-3N-A57	WXP40	10	■	019	6864013*	14,61
P2840S-3N-E67	WK40	10	●	019	7487733	11,23
P2840S-3N-E67	WKP35S	10	●	019	6863894	15,74
P2840S-3N-E67	WSP45G	10	●	019	7969009	16,56
P2840S-3N-E67	WXP40	10	■	019	6864018*	14,61
P2840S-3N-E77	WN15	10	●	019	8272934	12,89
P2840S-3N-E77	WNN15	10	●	019	8087898	18,18
P2840S-4N-A57	WKP25S	10	●	019	6863844	17,44
P2840S-4N-A57	WKP35S	10	●	019	6863890	17,44
P2840S-4N-A57	WSP45G	10	●	019	7969005	18,33
P2840S-4N-A57	WXP40	10	■	019	6864014*	16,33
P2840S-4N-E67	WK40	10	●	019	7487734	12,57

Bezeichnung / Designation	Sorte / Grade	VE / US		Disc. Gr.	Article No.	EURO Stück / piece
P2840S-4N-E67	WKP35S	10	●	019	6863895	17,44
P2840S-4N-E67	WSP45G	10	●	019	7969060	18,33
P2840S-4N-E67	WXP40	10	■	019	6864019*	16,33
P2840S-4N-E77	WN15	10	●	019	8272935	14,29
P2840S-4N-E77	WNN15	10	●	019	8087899	20,15
P2840S-5N-A57	WKP25S	10	●	019	6863845	17,44
P2840S-5N-A57	WKP35S	10	●	019	6863891	17,44
P2840S-5N-A57	WSP45G	10	●	019	7969006	18,33
P2840S-5N-A57	WXP40	10	■	019	6864015*	16,33
P2840S-5N-E67	WK40	10	●	019	7487735	12,57
P2840S-5N-E67	WKP35S	10	●	019	6863896	17,44
P2840S-5N-E67	WSP45G	10	●	019	7969061	18,33
P2840S-5N-E67	WXP40	10	■	019	6864020*	16,33
P2840S-5N-E77	WN15	10	●	019	8272936	14,29
P2840S-5N-E77	WNN15	10	●	019	8087900	20,15
P2840S-6N-A57	WKP35S	10	●	019	7487800	21,88
P2840S-6N-A57	WSP45G	10	●	019	7969203	22,98
P2840S-6N-E67	WK40	10	●	019	7487736	15,81
P2840S-6N-E67	WKP35S	10	●	019	7487802	21,88
P2840S-6N-E67	WSP45G	10	●	019	7969062	22,98
P2840S-6N-E77	WN15	10	●	019	8272937	17,93
P2840S-6N-E77	WNN15	10	●	019	8087901	25,30
P2840S-7N-A57	WKP35S	10	●	019	7487801	21,88
P2840S-7N-A57	WSP45G	10	●	019	7969204	22,98
P2840S-7N-E67	WK40	10	●	019	7487737	15,81
P2840S-7N-E67	WKP35S	10	●	019	7487803	21,88
P2840S-7N-E67	WSP45G	10	●	019	7969063	22,98
P2840S-7N-E77	WN15	10	●	019	8272938	17,93
P2840S-7N-E77	WNN15	10	●	019	8087902	25,30
P2841S-1N-A57	WKP25S	10	●	019	6863871	13,89
P2841S-1N-A57	WKP35S	10	●	019	6863902	13,89
P2841S-1N-A57	WSP45G	10	●	019	7969064	14,61
P2841S-1N-A57	WXP40	10	●	019	7487812	13,02
P2841S-1N-E57	WKP25S	10	●	019	6863846	13,89
P2841S-1N-E57	WKP35S	10	●	019	6863897	13,89
P2841S-1N-E57	WSP45G	10	●	019	7969069	14,61
P2841S-1N-E57	WXP40	10	●	019	7487819	13,02
P2841S-1N-E67	WKP35S	10	●	019	6863907	13,89
P2841S-1N-E67	WSP45G	10	●	019	7969074	14,61
P2841S-1N-E67	WXP40	10	●	019	7487826	13,02
P2841S-2N-A57	WKP25S	10	●	019	6863872	13,89
P2841S-2N-A57	WKP35S	10	●	019	6863903	13,89
P2841S-2N-A57	WSP45G	10	●	019	7969065	14,61
P2841S-2N-A57	WXP40	10	●	019	7487813	13,02
P2841S-2N-E57	WKP25S	10	●	019	6863847	13,89
P2841S-2N-E57	WKP35S	10	●	019	6863898	13,89
P2841S-2N-E57	WSP45G	10	●	019	7969070	14,61
P2841S-2N-E57	WXP40	10	●	019	7487820	13,02
P2841S-2N-E67	WKP35S	10	●	019	6863908	13,89
P2841S-2N-E67	WSP45G	10	●	019	7969075	14,61
P2841S-2N-E67	WXP40	10	●	019	7487827	13,02
P2841S-3N-A57	WKP25S	10	●	019	6863873	13,89
P2841S-3N-A57	WKP35S	10	●	019	6863904	13,89
P2841S-3N-A57	WSP45G	10	●	019	7969066	14,61
P2841S-3N-A57	WXP40	10	●	019	7487814	13,02
P2841S-3N-E57	WKP25S	10	●	019	6863848	13,89
P2841S-3N-E57	WKP35S	10	●	019	6863899	13,89
P2841S-3N-E57	WSP45G	10	●	019	7969071	14,61
P2841S-3N-E57	WXP40	10	●	019	7487821	13,02
P2841S-3N-E67	WKP35S	10	●	019	6863909	13,89
P2841S-3N-E67	WSP45G	10	●	019	7969076	14,61
P2841S-3N-E67	WXP40	10	●	019	7487828	13,02
P2841S-4N-A57	WKP25S	10	●	019	6863874	15,55
P2841S-4N-A57	WKP35S	10	●	019	6863905	15,55
P2841S-4N-A57	WSP45G	10	●	019	7969067	16,33
P2841S-4N-A57	WXP40	10	●	019	7487815	14,52
P2841S-4N-E57	WKP25S	10	●	019	6863849	15,55
P2841S-4N-E57	WKP35S	10	●	019	5100478	15,55
P2841S-4N-E57	WSP45G	10	●	019	7969072	16,33
P2841S-4N-E57	WXP40	10	●	019	7487822	14,52

Bezeichnung / Designation	Sorte / Grade	VE / US		Disc. Gr.	Article No.	EURO Stück / piece
P2841S-4N-E67	WKP35S	10	●	019	6863910	15,55
P2841S-4N-E67	WSP45G	10	●	019	7969077	16,33
P2841S-4N-E67	WXP40	10	●	019	7487829	14,52
P2841S-5N-A57	WKP25S	10	●	019	6863875	15,55
P2841S-5N-A57	WKP35S	10	●	019	6863906	15,55
P2841S-5N-A57	WSP45G	10	●	019	7969068	16,33
P2841S-5N-A57	WXP40	10	●	019	7487816	14,52
P2841S-5N-E57	WKP25S	10	●	019	6863870	15,55
P2841S-5N-E57	WKP35S	10	●	019	6863901	15,55
P2841S-5N-E57	WSP45G	10	●	019	7969073	16,33
P2841S-5N-E57	WXP40	10	●	019	7487823	14,52
P2841S-5N-E67	WKP35S	10	●	019	6863911	15,55
P2841S-5N-E67	WSP45G	10	●	019	7969078	16,33
P2841S-5N-E67	WXP40	10	●	019	7487830	14,52
P2841S-6N-A57	WKP25S	10	●	019	7487738	19,46
P2841S-6N-A57	WKP35S	10	●	019	7487804	19,46
P2841S-6N-A57	WSP45G	10	●	019	7969205	20,43
P2841S-6N-A57	WXP40	10	●	019	7487817	18,06
P2841S-6N-E57	WKP35S	10	●	019	7487806	19,46
P2841S-6N-E57	WSP45G	10	●	019	7969207	20,43
P2841S-6N-E57	WXP40	10	●	019	7487824	18,06
P2841S-6N-E67	WKP35S	10	●	019	7487808	19,46
P2841S-6N-E67	WSP45G	10	●	019	7969209	20,43
P2841S-6N-E67	WXP40	10	●	019	7487831	18,06
P2841S-7N-A57	WKP25S	10	●	019	7487739	19,46
P2841S-7N-A57	WKP35S	10	●	019	7487805	19,46
P2841S-7N-A57	WSP45G	10	●	019	7969206	20,43
P2841S-7N-A57	WXP40	10	●	019	7487818	18,06
P2841S-7N-E57	WKP35S	10	●	019	7487807	19,46
P2841S-7N-E57	WSP45G	10	●	019	7969208	20,43
P2841S-7N-E57	WXP40	10	●	019	7487825	18,06
P2841S-7N-E67	WKP35S	10	●	019	7487809	19,46
P2841S-7N-E67	WSP45G	10	●	019	7969210	20,43
P2841S-7N-E67	WXP40	10	●	019	7487832	18,06
P28467-1	WAK15	10	●	019	5020327	15,74
P28475-1	WTP35	10	■	019	5023733*	13,35
P28475-2	WTP35	10	●	019	5023951	13,35
P28475-3	WTP35	10	●	019	5021353	13,35
P28475-4	WTP35	10	●	019	5022031	14,87
P28477-1	WAK15	10	●	019	5015757	13,89
P28477-2	WAK15	10	●	019	5015758	13,89
P28477-2	WKP25	10	■	019	7290579*	13,89
P28477-3	WKP25	10	■	019	7291781*	13,89
P28495-1	WKM	10	●	009	5004685	11,63
P28495-1	WTL71	10	●	009	5005685	15,20
P28519-BSW1/8		1	●	THP	6244811	37,40
P28519-BSW3/16		1	●	THP	6244812	37,40
P28519-BSW1/4		1	●	THP	6244810	42,80
P28519-BSW5/16		1	●	THP	6244814	53,40
P28519-BSW3/8		1	●	THP	6244813	64,10
P28569-BSW7/16		1	●	THP	6244819	69,50
P28569-BSW1/2		1	●	THP	6244816	74,80
P28569-BSW5/8		1	●	THP	6244818	101,00
P28569-BSW3/4		1	●	THP	6244817	126,00
P28569-BSW7/8		1	●	THP	6244820	157,00
P28569-BSW1		1	●	THP	6244815	202,00
P2901-1R	WAK15	10	●	009	5040157	22,69
P2901-1R	WHH15X	10	●	009	7960061	24,96
P2901-1R	WK10	10	●	009	5004585	15,46
P2901-1R	WXM15	10	●	009	5015888	22,69
P2903-2R	WAK15	10	●	009	5036583	25,60
P2903-2R	WHH15X	10	●	009	7960062	28,10
P2903-2R	WK10	10	●	009	5004750	19,16
P2903-2R	WXM15	10	●	009	5015889	25,60
P2905-1	WAK15	10	●	009	5040158	32,20
P2905-1	WHH15X	10	●	009	7960063	35,40
P2905-1	WK10	10	●	009	5004598	24,29
P2905-1	WXM15	10	●	009	5015887	32,20
P29221-04	WTL82	10	■	019	5004507*	23,27
P29223-02	WTL82	10	■	019	5004264*	23,27

Bezeichnung / Designation	Sorte / Grade	VE / US		Disc. Gr.	Article No.	EURO Stück / piece
P29223-12	WTL82	10	■	019	5004265*	26,30
P29475-04-0	WTL74	10	■	019	5030159*	18,32
P29475-08-2	WTL74	10	■	019	5030161*	18,88
P3201-D07.94	WHH15X	10	●	009	7960103	40,30
P3201-D08	WHH15X	10	●	009	7960087	40,30
P3201-D09.52	WHH15X	10	●	009	7960104	42,60
P3201-D10	WHH15X	10	●	009	7960088	42,60
P3201-D10	WKP25	10	●	009	5092241	40,70
P3201-D10	WKP35	10	●	009	5052100	40,70
P3201-D12	WHH15X	10	●	009	7960089	45,00
P3201-D12	WKP25	10	●	009	5092242	43,00
P3201-D12	WKP35	10	●	009	5052101	43,00
P3201-D12.7	WHH15X	10	●	009	7960105	45,00
P3201-D15.87	WHH15X	10	●	009	7960106	47,40
P3201-D16	WHH15X	10	●	009	7960090	47,40
P3201-D16	WKP25	10	●	009	5092243	45,20
P3201-D16	WKP35	10	●	009	5052102	45,20
P3201-D19.05	WHH15X	10	●	009	7960107	54,50
P3201-D20	WHH15X	10	●	009	7960091	54,50
P3201-D20	WKP25	10	●	009	5092244	52,00
P3201-D20	WKP35	10	●	009	5052103	52,00
P3201-D25	WHH15X	10	●	009	7960092	73,40
P3201-D25	WKP25	10	●	009	5092245	70,10
P3201-D25	WKP35	10	●	009	5052104	70,10
P3201-D25.4	WHH15X	10	●	009	7960108	73,40
P3201-D30	WHH15X	5	●	009	7960093	99,50
P3201-D31.75	WHH15X	5	●	009	7960109	107,00
P3201-D32	WHH15X	5	●	009	7960094	107,00
P3202-D16	WXM25	10	●	009	5014093	45,20
P3202-D20	WXM25	10	●	009	5014097	52,00
P3204-D07.94	WHH15X	10	●	009	7960140	52,70
P3204-D07.94	WSP46G	10	●	009	8448226	50,30
P3204-D08	WHH15X	10	●	009	7960095	52,70
P3204-D08	WSM36	10	●	009	5591800	50,30
P3204-D08	WSP46	10	●	009	5591801	50,30
P3204-D08	WSP46G	10	●	009	8091507	50,30
P3204-D09.52	WHH15X	10	●	009	7960141	55,80
P3204-D09.52	WSP46	10	●	009	5591849	53,20
P3204-D09.52	WSP46G	10	●	009	8091636	53,20
P3204-D10	WHH15X	10	●	009	7960096	55,80
P3204-D10	WSM36	10	●	009	5591802	53,20
P3204-D10	WSP46	10	●	009	5591803	53,20
P3204-D10	WSP46G	10	●	009	8091508	53,20
P3204-D12	WHH15X	10	●	009	7960097	58,80
P3204-D12	WSM36	10	●	009	5591804	56,20
P3204-D12	WSP46	10	●	009	5591805	56,20
P3204-D12	WSP46G	10	●	009	8091509	56,20
P3204-D12.7	WHH15X	10	●	009	7960142	58,80
P3204-D12.7	WSM36	10	●	009	5591850	56,20
P3204-D12.7	WSP46	10	●	009	5591851	56,20
P3204-D12.7	WSP46G	10	●	009	8091637	56,20
P3204-D15.87	WHH15X	10	●	009	7960143	62,00
P3204-D15.87	WSP46	10	●	009	5591853	59,10
P3204-D15.87	WSP46G	10	●	009	8091638	59,10
P3204-D16	WHH15X	10	●	009	7960098	62,00
P3204-D16	WKP25	10	●	009	5092014	59,10
P3204-D16	WSM36	10	●	009	5591806	59,10
P3204-D16	WSP46	10	●	009	5591807	59,10
P3204-D16	WSP46G	10	●	009	8091630	59,10
P3204-D19.05	WHH15X	10	●	009	7960144	71,20
P3204-D19.05	WSM36	10	●	009	5591854	68,00
P3204-D19.05	WSP46	10	●	009	5591855	68,00
P3204-D19.05	WSP46G	10	●	009	8091639	68,00
P3204-D20	WHH15X	10	●	009	7960099	71,20
P3204-D20	WKP25	10	●	009	5092016	68,00
P3204-D20	WSM36	10	●	009	5591808	68,00
P3204-D20	WSP46	10	●	009	5591809	68,00
P3204-D20	WSP46G	10	●	009	8091631	68,00
P3204-D25	WHH15X	10	●	009	7960100	96,00
P3204-D25	WSM36	10	●	009	5591840	91,60

Bezeichnung / Designation	Sorte / Grade	VE / US		Disc. Gr.	Article No.	EURO Stück / piece
P3204-D25	WSP46	10	●	009	5591841	91,60
P3204-D25	WSP46G	10	●	009	8091632	91,60
P3204-D25.4	WHH15X	10	●	009	7960145	96,00
P3204-D25.4	WSP46	10	●	009	5591857	91,60
P3204-D25.4	WSP46G	10	●	009	8091720	91,60
P3204-D30	WHH15X	5	●	009	7960101	130,00
P3204-D30	WSM36	5	●	009	5591842	124,00
P3204-D30	WSP46	5	●	009	5591843	124,00
P3204-D30	WSP46G	5	●	009	8448225	124,00
P3204-D31.75	WHH15X	5	●	009	7960146	139,00
P3204-D31.75	WSP46	5	●	009	5591859	133,00
P3204-D31.75	WSP46G	5	●	009	8448227	133,00
P3204-D32	WHH15X	5	●	009	7960102	139,00
P3204-D32	WSM36	5	●	009	5591844	133,00
P3204-D32	WSP46	5	●	009	5591845	133,00
P3204-D32	WSP46G	5	●	009	8091633	133,00
P40310-M3		1	●	THP	6149533	32,40
P40310-M4		1	●	THP	6149534	30,10
P40310-M5		1	●	THP	6149535	32,40
P40310-M6		1	●	THP	6149536	37,00
P40310-M8		1	●	THP	6149537	46,30
P40310-M10		1	●	THP	6149538	55,50
P40360-M12		1	●	THP	6149539	64,70
P40360-M14		1	●	THP	6149540	74,00
P40360-M16		1	●	THP	6149541	83,30
P40360-M20		1	●	THP	6149542	117,00
P40519-M3		1	●	THP	6244821	35,60
P40519-M4		1	●	THP	6244822	33,00
P40519-M5		1	●	THP	6244823	35,60
P40519-M6		1	●	THP	6244824	40,70
P40519-M8		1	●	THP	6244825	50,90
P40519-M10		1	●	THP	6244826	61,10
P40569-M12		1	●	THP	6244827	74,80
P4130-4R12-E47	WKK10S	10	●	019	7782318	40,10
P4130-4R12-E47	WKK20S	10	●	019	7782319	40,10
P4130-4R12-E47	WKP30S	10	●	019	7782320	40,10
P4160-2L08-E47	WKK20S	10	●	019	7782315	36,50
P4160-2L08-E47	WKP30S	10	●	019	7782316	36,50
P4160-2L08-E47	WSM20S	10	●	019	7782317	36,50
P4160-2R04-E47	WKK20S	10	●	019	7782229	36,50
P4160-2R04-E47	WKP30S	10	●	019	7782310	36,50
P4160-2R04-E47	WSM20S	10	●	019	7782311	36,50
P4160-2R08-E47	WKK20S	10	●	019	7782312	36,50
P4160-2R08-E47	WKP30S	10	●	019	7782313	36,50
P4160-2R08-E47	WSM20S	10	●	019	7782314	36,50
P4406-1	WKP35S	10	●	009	5918500	16,41
P4406-2	WKP35S	10	●	009	5918501	16,76
P4406-3	WKP35S	10	●	009	5918502	17,77
P4406-4	WAK15	10	●	009	5040242	18,22
P4406-4	WKP35S	10	●	009	5918503	18,22
P4406-4	WPM	10	●	009	5004668	13,79
P4406-5	WKP35S	10	●	009	5918504	19,08
P44280-1R08-D57	WSM35G	10	●	009	8285027	41,00
P44280-1R08-D57	WSM35S	10	■	009	6161433*	41,00
P44280-1R10-D57	WKP25S	10	●	009	7028030	39,00
P44280-1R10-D57	WSM35G	10	●	009	8285028	41,00
P44280-1R125-D57	WSM35G	10	●	009	8285029	41,00
P44280-1R15-D57	WSM35G	10	●	009	8285030	41,00
P44280-1R15-D57	WSM35S	10	■	009	7058541*	41,00
P44280-1R20-D57	WKP25S	10	●	009	7028032	39,00
P44280-1R20-D57	WSM35G	10	●	009	8285031	41,00
P44280-1R20-D57	WSM35S	10	■	009	6161437*	41,00
P44280-2R25-D57	WKP25S	10	●	009	7028033	40,40
P44280-2R25-D57	WSM35G	10	●	009	8285032	42,40
P44280-2R25-D57	WSM35S	10	■	009	7058542*	42,40
P44280-2R30-D57	WKP25S	10	●	009	7028034	40,40
P44280-2R30-D57	WSM35G	10	●	009	8285033	42,40
P44280-2R30-D57	WSM35S	10	■	009	7058543*	42,40
P44280-2R40-D57	WSM35G	10	●	009	8285034	42,40
P44280-2R40-D57	WSM35S	10	■	009	6161445*	42,40

Bezeichnung / Designation	Sorte / Grade	VE / US		Disc. Gr.	Article No.	EURO Stück / piece
P44290-1R08-D57	WKP25S	10	●	009	7028035	30,00
P44290-1R08-D57	WSM35G	10	●	009	8441404	32,60
P44290-1R08-D57	WSM35S	10	●	009	7858369	32,60
P44290-1R10-D57	WKP25S	10	●	009	7028036	30,00
P44290-1R125-D57	WKP25S	10	●	009	7028037	30,00
P44290-1R20-D57	WKP25S	10	●	009	7028038	30,00
P44290-2R25-D57	WKP25S	10	●	009	7028039	31,00
P44290-2R30-D57	WKP25S	10	●	009	7028040	31,00
P44290-2R30-D57	WSM35G	10	●	009	8285035	32,60
P44290-2R30-D57	WSM35S	10	■	009	7858400*	32,60
P44290-2R40-D57	WSM35G	10	●	009	8285036	32,60
P44290-2R40-D57	WSM35S	10	■	009	7858401*	32,60
P44462-1	WKP35S	10	●	009	5918506	20,79
P44462-3	WKP35S	10	●	009	5918509	22,84
P4460-2R04-G88	WNN15	10	●	019	8043658	27,40
P4460-2R08-G88	WK10	10	●	019	7782321	20,58
P4460-2R08-G88	WNN15	10	●	019	7782322	27,40
P45420-G67	WHH15X	10	●	009	7960071	32,40
P45420-G67	WXM15	10	●	009	5535307	29,40
P45424-1-G67	WAK15	10	●	009	6625041	32,40
P45424-1-G67	WHH15X	10	●	009	7960072	32,40
P45424-2-G67	WAK15	10	●	009	6109211	52,90
P45424-2-G67	WHH15X	10	●	009	7960073	52,90
P4840C-1R-E67	WKP35S	10	●	019	6168282	13,76
P4840C-1R-E67	WSP45G	10	●	019	7968832	14,46
P4840C-1R-E67	WXP40	10	●	019	6154404	12,89
P4840C-1R-E77	WN15	10	●	019	8272924	11,27
P4840C-1R-E77	WNN15	10	●	019	8087888	15,89
P4840C-2R-E67	WKP35S	10	●	019	6168818	15,30
P4840C-2R-E67	WSP45G	10	●	019	7968833	16,06
P4840C-2R-E67	WXP40	10	●	019	6154405	14,29
P4840C-2R-E77	WN15	10	●	019	8272925	12,53
P4840C-2R-E77	WNN15	10	●	019	8087889	17,67
P4840C-3R-E67	WKP35S	10	●	019	6168941	16,81
P4840C-3R-E67	WSP45G	10	●	019	7968834	17,66
P4840C-3R-E67	WXP40	10	●	019	6154407	15,72
P4840C-3R-E77	WN15	10	●	019	8272926	13,79
P4840C-3R-E77	WNN15	10	●	019	8087890	19,43
P4840C-4R-E67	WKP35S	10	●	019	6168942	18,37
P4840C-4R-E67	WSP45G	10	●	019	7968835	19,27
P4840C-4R-E67	WXP40	10	●	019	6154409	17,14
P4840C-4R-E77	WN15	10	●	019	8272927	15,04
P4840C-4R-E77	WNN15	10	●	019	8087891	21,21
P4840C-5R-E67	WKP35S	10	●	019	6168948	19,13
P4840C-5R-E67	WSP45G	10	●	019	7968836	20,08
P4840C-5R-E67	WXP40	10	●	019	6154461	17,87
P4840C-5R-E77	WN15	10	●	019	8272928	15,67
P4840C-5R-E77	WNN15	10	●	019	8087892	22,09
P4840C-6R-E67	WKP35S	10	●	019	6168949	19,88
P4840C-6R-E67	WSP45G	10	●	019	7968837	20,88
P4840C-6R-E67	WXP40	10	●	019	6154464	18,57
P4840C-6R-E77	WN15	10	●	019	8272929	16,28
P4840C-6R-E77	WNN15	10	●	019	8087893	22,96
P4840C-7R-E67	WKP35S	10	●	019	6168970	20,65
P4840C-7R-E67	WSP45G	10	●	019	7968838	21,67
P4840C-7R-E67	WXP40	10	●	019	6154465	19,28
P4840C-7R-E77	WN15	10	●	019	8272930	16,91
P4840C-7R-E77	WNN15	10	●	019	8087894	23,84
P4840C-8R-E67	WKP35S	10	●	019	6168971	21,41
P4840C-8R-E67	WSP45G	10	●	019	7968839	22,49
P4840C-8R-E67	WXP40	10	●	019	6154466	20,03
P4840C-8R-E77	WN15	10	●	019	8272931	17,54
P4840C-8R-E77	WNN15	10	●	019	8087895	24,75
P4840P-1R-A57	WKP25S	10	●	019	6171421	13,76
P4840P-1R-A57	WKP35S	10	●	019	6170402	13,76
P4840P-1R-A57	WSP45G	10	●	019	7968890	14,46
P4840P-1R-E57	WKP25S	10	●	019	6171451	13,76
P4840P-1R-E57	WKP35S	10	●	019	6170425	13,76
P4840P-1R-E57	WSP45G	10	●	019	7968898	14,46
P4840P-1R-E67	WKP25S	10	●	019	6171464	13,76

Bezeichnung / Designation	Sorte / Grade	VE / US		Disc. Gr.	Article No.	EURO Stück / piece
P4840P-1R-E67	WKP35S	10	●	019	6171332	13,76
P4840P-1R-E67	WSP45G	10	●	019	7968906	14,46
P4840P-1R-E77	WN15	10	●	019	8272916	11,27
P4840P-1R-E77	WNN15	10	●	019	8087880	15,89
P4840P-2R-A57	WKP25S	10	●	019	6171422	15,30
P4840P-2R-A57	WKP35S	10	●	019	6170404	15,30
P4840P-2R-A57	WSP45G	10	●	019	7968891	16,06
P4840P-2R-E57	WKP25S	10	●	019	6171453	15,30
P4840P-2R-E57	WKP35S	10	●	019	6170426	15,30
P4840P-2R-E57	WSP45G	10	●	019	7968899	16,06
P4840P-2R-E67	WKP25S	10	●	019	6171465	15,30
P4840P-2R-E67	WKP35S	10	●	019	6171333	15,30
P4840P-2R-E67	WSP45G	10	●	019	7968907	16,06
P4840P-2R-E77	WN15	10	●	019	8272917	12,53
P4840P-2R-E77	WNN15	10	●	019	8087881	17,67
P4840P-3R-A57	WKP25S	10	●	019	6171423	16,81
P4840P-3R-A57	WKP35S	10	●	019	6170405	16,81
P4840P-3R-A57	WSP45G	10	●	019	7968892	17,66
P4840P-3R-E57	WKP25S	10	●	019	6171454	16,81
P4840P-3R-E57	WKP35S	10	●	019	6170427	16,81
P4840P-3R-E57	WSP45G	10	●	019	7968900	17,66
P4840P-3R-E67	WKP25S	10	●	019	6171466	16,81
P4840P-3R-E67	WKP35S	10	●	019	6171334	16,81
P4840P-3R-E67	WSP45G	10	●	019	7968908	17,66
P4840P-3R-E77	WN15	10	●	019	8272918	13,79
P4840P-3R-E77	WNN15	10	●	019	8087882	19,43
P4840P-4R-A57	WKP25S	10	●	019	6171424	18,37
P4840P-4R-A57	WKP35S	10	●	019	6170409	18,37
P4840P-4R-A57	WSP45G	10	●	019	7968893	19,27
P4840P-4R-E57	WKP25S	10	●	019	6171455	18,37
P4840P-4R-E57	WKP35S	10	●	019	6170428	18,37
P4840P-4R-E57	WSP45G	10	●	019	7968901	19,27
P4840P-4R-E67	WKP25S	10	●	019	6171468	18,37
P4840P-4R-E67	WKP35S	10	●	019	6171335	18,37
P4840P-4R-E67	WSP45G	10	●	019	7968909	19,27
P4840P-4R-E77	WN15	10	●	019	8272919	15,04
P4840P-4R-E77	WNN15	10	●	019	8087883	21,21
P4840P-5R-A57	WKP25S	10	●	019	6171425	19,13
P4840P-5R-A57	WKP35S	10	●	019	6170421	19,13
P4840P-5R-A57	WSP45G	10	●	019	7968894	20,08
P4840P-5R-E57	WKP25S	10	●	019	6171456	19,13
P4840P-5R-E57	WKP35S	10	●	019	6170450	19,13
P4840P-5R-E57	WSP45G	10	●	019	7968902	20,08
P4840P-5R-E67	WKP25S	10	●	019	6171469	19,13
P4840P-5R-E67	WKP35S	10	●	019	6171336	19,13
P4840P-5R-E67	WSP45G	10	●	019	7968910	20,08
P4840P-5R-E77	WN15	10	●	019	8272920	15,67
P4840P-5R-E77	WNN15	10	●	019	8087884	22,09
P4840P-6R-A57	WKP25S	10	●	019	6171428	19,88
P4840P-6R-A57	WKP35S	10	●	019	6170422	19,88
P4840P-6R-A57	WSP45G	10	●	019	7968895	20,88
P4840P-6R-E57	WKP25S	10	●	019	6171458	19,88
P4840P-6R-E57	WKP35S	10	●	019	6170451	19,88
P4840P-6R-E57	WSP45G	10	●	019	7968903	20,88
P4840P-6R-E67	WKP25S	10	●	019	6171490	19,88
P4840P-6R-E67	WKP35S	10	●	019	6171337	19,88
P4840P-6R-E67	WSP45G	10	●	019	7968911	20,88
P4840P-6R-E77	WN15	10	●	019	8272921	16,28
P4840P-6R-E77	WNN15	10	●	019	8087885	22,96
P4840P-7R-A57	WKP25S	10	●	019	6171429	20,65
P4840P-7R-A57	WKP35S	10	●	019	6170423	20,65
P4840P-7R-A57	WSP45G	10	●	019	7968896	21,67
P4840P-7R-E57	WKP25S	10	●	019	6171462	20,65
P4840P-7R-E57	WKP35S	10	●	019	6170452	20,65
P4840P-7R-E57	WSP45G	10	●	019	7968904	21,67
P4840P-7R-E67	WKP25S	10	●	019	6171491	20,65
P4840P-7R-E67	WKP35S	10	●	019	6171338	20,65
P4840P-7R-E67	WSP45G	10	●	019	7968912	21,67
P4840P-7R-E77	WN15	10	●	019	8272922	16,91
P4840P-7R-E77	WNN15	10	●	019	8087886	23,84

Bezeichnung / Designation	Sorte / Grade	VE / US		Disc. Gr.	Article No.	EURO Stück / piece
P4840P-8R-A57	WKP25S	10	●	019	6171450	21,41
P4840P-8R-A57	WKP35S	10	●	019	6170424	21,41
P4840P-8R-A57	WSP45G	10	●	019	7968897	22,49
P4840P-8R-E57	WKP25S	10	●	019	6171463	21,41
P4840P-8R-E57	WKP35S	10	●	019	6170453	21,41
P4840P-8R-E57	WSP45G	10	●	019	7968905	22,49
P4840P-8R-E67	WKP25S	10	●	019	6171492	21,41
P4840P-8R-E67	WKP35S	10	●	019	6171339	21,41
P4840P-8R-E67	WSP45G	10	●	019	7968913	22,49
P4840P-8R-E77	WN15	10	●	019	8272923	17,54
P4840P-8R-E77	WNN15	10	●	019	8087887	24,75
P4841C-1R-A57	WKP35S	10	●	019	6169011	12,18
P4841C-1R-A57	WSP45G	10	●	019	7968914	12,78
P4841C-1R-A57	WXP40	10	●	019	6154467	11,39
P4841C-1R-E57	WKP35S	10	●	019	6169062	12,18
P4841C-1R-E57	WSP45G	10	●	019	7968922	12,78
P4841C-1R-E57	WXP40	10	●	019	6154550	11,39
P4841C-2R-A57	WKP35S	10	●	019	6169013	13,53
P4841C-2R-A57	WSP45G	10	●	019	7968915	14,21
P4841C-2R-A57	WXP40	10	●	019	6154469	12,69
P4841C-2R-E57	WKP35S	10	●	019	6169063	13,53
P4841C-2R-E57	WSP45G	10	●	019	7968923	14,21
P4841C-2R-E57	WXP40	10	●	019	6154554	12,69
P4841C-3R-A57	WKP35S	10	●	019	6169015	14,89
P4841C-3R-A57	WSP45G	10	●	019	7968916	15,63
P4841C-3R-A57	WXP40	10	●	019	6154480	13,90
P4841C-3R-E57	WKP35S	10	●	019	6169064	14,89
P4841C-3R-E57	WSP45G	10	●	019	7968924	15,63
P4841C-3R-E57	WXP40	10	●	019	6154556	13,90
P4841C-4R-A57	WKP35S	10	●	019	6169016	16,24
P4841C-4R-A57	WSP45G	10	●	019	7968917	17,05
P4841C-4R-A57	WXP40	10	●	019	6154481	15,17
P4841C-4R-E57	WKP35S	10	●	019	6169065	16,24
P4841C-4R-E57	WSP45G	10	●	019	7968925	17,05
P4841C-4R-E57	WXP40	10	●	019	6154559	15,17
P4841C-5R-A57	WKP35S	10	●	019	6169017	16,92
P4841C-5R-A57	WSP45G	10	●	019	7968918	17,76
P4841C-5R-A57	WXP40	10	●	019	6154484	15,82
P4841C-5R-E57	WKP35S	10	●	019	6169067	16,92
P4841C-5R-E57	WSP45G	10	●	019	7968926	17,76
P4841C-5R-E57	WXP40	10	●	019	6154590	15,82
P4841C-6R-A57	WKP35S	10	●	019	6169018	17,63
P4841C-6R-A57	WSP45G	10	●	019	7968919	18,51
P4841C-6R-A57	WXP40	10	●	019	6154485	16,44
P4841C-6R-E57	WKP35S	10	●	019	6169068	17,63
P4841C-6R-E57	WSP45G	10	●	019	7968927	18,51
P4841C-6R-E57	WXP40	10	●	019	6154591	16,44
P4841C-7R-A57	WKP35S	10	●	019	6169019	18,29
P4841C-7R-A57	WSP45G	10	●	019	7968920	19,21
P4841C-7R-A57	WXP40	10	●	019	6154487	17,07
P4841C-7R-E57	WKP35S	10	●	019	6169069	18,29
P4841C-7R-E57	WSP45G	10	●	019	7968928	19,21
P4841C-7R-E57	WXP40	10	●	019	6154594	17,07
P4841C-8R-A57	WKP35S	10	●	019	6169060	18,95
P4841C-8R-A57	WSP45G	10	●	019	7968921	19,90
P4841C-8R-A57	WXP40	10	●	019	6154489	17,72
P4841C-8R-E57	WKP35S	10	●	019	6169080	18,95
P4841C-8R-E57	WSP45G	10	●	019	7968929	19,90
P4841C-8R-E57	WXP40	10	●	019	6154597	17,72
P4841P-1R-A57	WKP25S	10	●	019	6169184	12,18
P4841P-1R-A57	WKP35S	10	●	019	6169086	12,18
P4841P-1R-A57	WSP45G	10	●	019	7968930	12,78
P4841P-1R-E57	WKP25S	10	●	019	6169991	12,18
P4841P-1R-E57	WKP35S	10	●	019	6169106	12,18
P4841P-1R-E57	WSP45G	10	●	019	7968938	12,78
P4841P-2R-A57	WKP25S	10	●	019	6169249	13,53
P4841P-2R-A57	WKP35S	10	●	019	6169088	13,53
P4841P-2R-A57	WSP45G	10	●	019	7968931	14,21
P4841P-2R-E57	WKP25S	10	●	019	6169992	13,53
P4841P-2R-E57	WKP35S	10	●	019	6169107	13,53

Bezeichnung / Designation	Sorte / Grade	VE / US		Disc. Gr.	Article No.	EURO Stück / piece
P4841P-2R-E57	WSP45G	10	●	019	7968939	14,21
P4841P-3R-A57	WKP25S	10	●	019	6169845	14,88
P4841P-3R-A57	WKP35S	10	●	019	6169100	14,88
P4841P-3R-A57	WSP45G	10	●	019	7968932	15,62
P4841P-3R-E57	WKP25S	10	●	019	6169993	14,88
P4841P-3R-E57	WKP35S	10	●	019	6169108	14,88
P4841P-3R-E57	WSP45G	10	●	019	7968940	15,62
P4841P-4R-A57	WKP25S	10	●	019	6169846	16,24
P4841P-4R-A57	WKP35S	10	●	019	6169101	16,24
P4841P-4R-A57	WSP45G	10	●	019	7968933	17,05
P4841P-4R-E57	WKP25S	10	●	019	6169995	16,24
P4841P-4R-E57	WKP35S	10	●	019	6169109	16,24
P4841P-4R-E57	WSP45G	10	●	019	7968941	17,05
P4841P-5R-A57	WKP25S	10	●	019	6169848	16,92
P4841P-5R-A57	WKP35S	10	●	019	6169102	16,92
P4841P-5R-A57	WSP45G	10	●	019	7968934	17,76
P4841P-5R-E57	WKP25S	10	●	019	6169997	16,92
P4841P-5R-E57	WKP35S	10	●	019	6169131	16,92
P4841P-5R-E57	WSP45G	10	●	019	7968942	17,76
P4841P-6R-A57	WKP25S	10	●	019	6169880	17,60
P4841P-6R-A57	WKP35S	10	●	019	6169103	17,60
P4841P-6R-A57	WSP45G	10	●	019	7968935	18,48
P4841P-6R-E57	WKP25S	10	●	019	6169998	17,60
P4841P-6R-E57	WKP35S	10	●	019	6169132	17,60
P4841P-6R-E57	WSP45G	10	●	019	7968943	18,48
P4841P-7R-A57	WKP25S	10	●	019	6169882	18,29
P4841P-7R-A57	WKP35S	10	●	019	6169104	18,29
P4841P-7R-A57	WSP45G	10	●	019	7968936	19,21
P4841P-7R-E57	WKP25S	10	●	019	6169999	18,29
P4841P-7R-E57	WKP35S	10	●	019	6169133	18,29
P4841P-7R-E57	WSP45G	10	●	019	7968944	19,21
P4841P-8R-A57	WKP25S	10	●	019	6169883	18,95
P4841P-8R-A57	WKP35S	10	●	019	6169105	18,95
P4841P-8R-A57	WSP45G	10	●	019	7968937	19,90
P4841P-8R-E57	WKP25S	10	●	019	6170001	18,95
P4841P-8R-E57	WKP35S	10	●	019	6169134	18,95
P4841P-8R-E57	WSP45G	10	●	019	7968945	19,90
P6001-D12,00R	WPP45C	1	●	018	6305275	93,40
P6001-D12,10R	WPP45C	1	●	018	6521178	93,40
P6001-D12,20R	WPP45C	1	●	018	6521179	93,40
P6001-D12,30R	WPP45C	1	●	018	6521230	93,40
P6001-D12,40R	WPP45C	1	●	018	6521231	93,40
P6001-D12,50R	WPP45C	1	●	018	6305314	93,40
P6001-D12,60R	WPP45C	1	●	018	6521232	93,40
P6001-D12,70R	WPP45C	1	●	018	6305315	93,40
P6001-D12,80R	WPP45C	1	●	018	6521233	93,40
P6001-D12,90R	WPP45C	1	●	018	6521234	93,40
P6001-D12,95R	WPP45C	1	■	018	6521235*	93,40
P6001-D13,00R	WPP45C	1	●	018	6305317	93,40
P6001-D13,11R	WPP45C	1	●	018	6521236	93,40
P6001-D13,20R	WPP45C	1	●	018	6521237	93,40
P6001-D13,25R	WPP45C	1	■	018	6521238*	93,40
P6001-D13,30R	WPP45C	1	●	018	6521239	93,40
P6001-D13,40R	WPP45C	1	●	018	6521240	93,40
P6001-D13,50R	WPP45C	1	●	018	6305318	93,40
P6001-D13,60R	WPP45C	1	●	018	6521241	93,40
P6001-D13,70R	WPP45C	1	●	018	6521242	93,40
P6001-D13,80R	WPP45C	1	●	018	6521243	93,40
P6001-D13,89R	WPP45C	1	●	018	6521244	93,40
P6001-D14,00R	WPP45C	1	●	018	6305319	99,20
P6001-D14,10R	WPP45C	1	●	018	6521245	99,20
P6001-D14,20R	WPP45C	1	●	018	6521246	99,20
P6001-D14,30R	WPP45C	1	●	018	6305371	99,20
P6001-D14,40R	WPP45C	1	●	018	6521247	99,20
P6001-D14,50R	WPP45C	1	●	018	6305372	99,20
P6001-D14,60R	WPP45C	1	●	018	6305373	99,20
P6001-D14,68R	WPP45C	1	●	018	6521248	99,20
P6001-D14,80R	WPP45C	1	●	018	6305375	99,20
P6001-D14,90R	WPP45C	1	●	018	6521249	99,20
P6001-D15,00R	WPP45C	1	●	018	6305377	99,20

Bezeichnung / Designation	Sorte / Grade	VE / US		Disc. Gr.	Article No.	EURO Stück / piece
P6001-D15,09R	WPP45C	1	●	018	6521250	99,20
P6001-D15,20R	WPP45C	1	●	018	6521251	99,20
P6001-D15,30R	WPP45C	1	●	018	6521252	99,20
P6001-D15,40R	WPP45C	1	■	018	6521253*	99,20
P6001-D15,47R	WPP45C	1	●	018	6521254	99,20
P6001-D15,50R	WPP45C	1	●	018	6305378	99,20
P6001-D15,60R	WPP45C	1	●	018	6521255	99,20
P6001-D15,70R	WPP45C	1	●	018	6521256	99,20
P6001-D15,80R	WPP45C	1	●	018	6521257	99,20
P6001-D15,87R	WPP45C	1	●	018	6521258	99,20
P6001-D16,00R	WPP45C	1	●	018	6305379	105,00
P6001-D16,13R	WPP45C	1	●	018	6521259	105,00
P6001-D16,26R	WPP45C	1	●	018	6305390	105,00
P6001-D16,43R	WPP45C	1	●	018	6521260	105,00
P6001-D16,50R	WPP45C	1	●	018	6305392	105,00
P6001-D16,66R	WPP45C	1	●	018	6305393	105,00
P6001-D16,70R	WPP45C	1	●	018	6521261	105,00
P6001-D17,00R	WPP45C	1	●	018	6305394	105,00
P6001-D17,07R	WPP45C	1	●	018	6306592	105,00
P6001-D17,20R	WPP45C	1	●	018	6514486	105,00
P6001-D17,45R	WPP45C	1	●	018	6306593	105,00
P6001-D17,50R	WPP45C	1	●	018	6306711	105,00
P6001-D17,70R	WPP45C	1	●	018	6306712	105,00
P6001-D17,86R	WPP45C	1	●	018	6521262	105,00
P6001-D18,00R	WPP45C	1	●	018	6306713	111,00
P6001-D18,24R	WPP45C	1	●	018	6521263	111,00
P6001-D18,50R	WPP45C	1	●	018	6306714	111,00
P6001-D18,65R	WPP45C	1	●	018	6306715	111,00
P6001-D18,70R	WPP45C	1	●	018	6521264	111,00
P6001-D18,80R	WPP45C	1	●	018	6521265	111,00
P6001-D19,00R	WPP45C	1	●	018	6306716	111,00
P6001-D19,05R	WPP45C	1	●	018	6521266	111,00
P6001-D19,20R	WPP45C	1	●	018	6521267	111,00
P6001-D19,25R	WPP45C	1	●	018	6306717	111,00
P6001-D19,30R	WPP45C	1	●	018	6521268	111,00
P6001-D19,43R	WPP45C	1	●	018	6306718	111,00
P6001-D19,50R	WPP45C	1	●	018	6306719	111,00
P6001-D19,60R	WPP45C	1	●	018	6521269	111,00
P6001-D19,70R	WPP45C	1	●	018	6306740	111,00
P6001-D19,84R	WPP45C	1	●	018	6306741	111,00
P6001-D20,00R	WPP45C	1	●	018	6306742	117,00
P6001-D20,20R	WPP45C	1	●	018	6521270	117,00
P6001-D20,24R	WPP45C	1	●	018	6521271	117,00
P6001-D20,50R	WPP45C	1	●	018	6306743	117,00
P6001-D20,62R	WPP45C	1	●	018	6521272	117,00
P6001-D20,70R	WPP45C	1	●	018	6306744	117,00
P6001-D21,00R	WPP45C	1	●	018	6306745	117,00
P6001-D21,41R	WPP45C	1	●	018	6521273	117,00
P6001-D21,50R	WPP45C	1	●	018	6306747	117,00
P6001-D21,70R	WPP45C	1	●	018	6521274	117,00
P6001-D21,83R	WPP45C	1	●	018	6521275	117,00
P6001-D22,00R	WPP45C	1	●	018	6306749	123,00
P6001-D22,22R	WPP45C	1	●	018	6306774	123,00
P6001-D22,42R	WPP45C	1	●	018	6521276	123,00
P6001-D22,47R	WPP45C	1	■	018	6521277*	123,00
P6001-D22,50R	WPP45C	1	●	018	6306775	123,00
P6001-D22,62R	WPP45C	1	●	018	6521278	123,00
P6001-D22,70R	WPP45C	1	●	018	6521279	123,00
P6001-D22,77R	WPP45C	1	■	018	6521280*	123,00
P6001-D23,00R	WPP45C	1	●	018	6306776	123,00
P6001-D23,39R	WPP45C	1	●	018	6521281	123,00
P6001-D23,50R	WPP45C	1	●	018	6306777	123,00
P6001-D23,70R	WPP45C	1	●	018	6521282	123,00
P6001-D23,80R	WPP45C	1	●	018	6306778	123,00
P6001-D24,00R	WPP45C	1	●	018	6306779	134,00
P6001-D24,21R	WPP45C	1	●	018	6521283	134,00
P6001-D24,50R	WPP45C	1	●	018	6306800	134,00
P6001-D24,59R	WPP45C	1	●	018	6521284	134,00
P6001-D24,70R	WPP45C	1	●	018	6521285	134,00
P6001-D25,00R	WPP45C	1	●	018	6306801	134,00

Bezeichnung / Designation	Sorte / Grade	VE / US		Disc. Gr.	Article No.	EURO Stück / piece
P6001-D25,25R	WPP45C	1	●	018	6306803	134,00
P6001-D25,40R	WPP45C	1	●	018	6306804	134,00
P6001-D25,50R	WPP45C	1	●	018	6306805	134,00
P6001-D25,65R	WPP45C	1	●	018	6521286	134,00
P6001-D25,70R	WPP45C	1	●	018	6521287	134,00
P6001-D25,80R	WPP45C	1	●	018	6521288	134,00
P6001-D26,00R	WPP45C	1	●	018	6306806	146,00
P6001-D26,25R	WPP45C	1	●	018	6306809	146,00
P6001-D26,50R	WPP45C	1	●	018	6306821	146,00
P6001-D26,59R	WPP45C	1	●	018	6521289	146,00
P6001-D27,00R	WPP45C	1	●	018	6306822	146,00
P6001-D27,38R	WPP45C	1	●	018	6521290	146,00
P6001-D27,50R	WPP45C	1	●	018	6306823	146,00
P6001-D27,78R	WPP45C	1	●	018	6521291	146,00
P6001-D28,00R	WPP45C	1	●	018	6306825	158,00
P6001-D28,17R	WPP45C	1	●	018	6521292	158,00
P6001-D28,50R	WPP45C	1	●	018	6306826	158,00
P6001-D28,57R	WPP45C	1	●	018	6521293	158,00
P6001-D29,00R	WPP45C	1	●	018	6306827	158,00
P6001-D29,37R	WPP45C	1	●	018	6521294	158,00
P6001-D29,50R	WPP45C	1	●	018	6306828	158,00
P6001-D29,77R	WPP45C	1	●	018	6521295	158,00
P6001-D30,00R	WPP45C	1	●	018	6306829	169,00
P6001-D30,15R	WPP45C	1	●	018	6521296	169,00
P6001-D30,50R	WPP45C	1	●	018	6306860	169,00
P6001-D31,00R	WPP45C	1	●	018	6306861	169,00
P6001-D31,50R	WPP45C	1	●	018	6306862	169,00
P6001-D31,75R	WPP45C	1	●	018	6306863	169,00
P6001-D31,99R	WPP45C	1	●	018	6306864	169,00
P6001-D32,00R	WPP45C	1	●	018	6521297	181,00
P6001-D32,10R	WPP45C	1	●	018	6521298	181,00
P6001-D33,00R	WPP45C	1	●	018	6521299	181,00
P6001-D34,00R	WPP45C	1	●	018	6521300	193,00
P6001-D35,00R	WPP45C	1	●	018	6521301	193,00
P6001-D36,00R	WPP45C	1	●	018	6521302	204,00
P6001-D37,00R	WPP45C	1	●	018	6521303	204,00
P6001-D37,99R	WPP45C	1	●	018	6521304	204,00
P6003-D12,00R	WMP35	1	●	018	5656107	93,40
P6003-D12,10R	WMP35	1	●	018	6254692	93,40
P6003-D12,20R	WMP35	1	●	018	6254760	93,40
P6003-D12,30R	WMP35	1	●	018	6254766	93,40
P6003-D12,40R	WMP35	1	●	018	6254767	93,40
P6003-D12,50R	WMP35	1	●	018	5833823	93,40
P6003-D12,60R	WMP35	1	●	018	6254768	93,40
P6003-D12,70R	WMP35	1	●	018	5656108	93,40
P6003-D12,80R	WMP35	1	●	018	6254820	93,40
P6003-D12,90R	WMP35	1	●	018	6254821	93,40
P6003-D12,95R	WMP35	1	●	018	6255986	93,40
P6003-D13,00R	WMP35	1	●	018	5626643	93,40
P6003-D13,11R	WMP35	1	●	018	6254823	93,40
P6003-D13,20R	WMP35	1	●	018	5833824	93,40
P6003-D13,25R	WMP35	1	●	018	6255987	93,40
P6003-D13,30R	WMP35	1	●	018	6254824	93,40
P6003-D13,40R	WMP35	1	●	018	6254825	93,40
P6003-D13,50R	WMP35	1	●	018	5833825	93,40
P6003-D13,60R	WMP35	1	●	018	6254875	93,40
P6003-D13,70R	WMP35	1	●	018	5833826	93,40
P6003-D13,80R	WMP35	1	●	018	6254878	93,40
P6003-D13,89R	WMP35	1	●	018	6254877	93,40
P6003-D14,00R	WMP35	1	●	018	5656089	99,20
P6003-D14,10R	WMP35	1	●	018	6254955	99,20
P6003-D14,20R	WMP35	1	●	018	6254956	99,20
P6003-D14,30R	WMP35	1	●	018	5833827	99,20
P6003-D14,40R	WMP35	1	●	018	6254958	99,20
P6003-D14,50R	WMP35	1	●	018	5833828	99,20
P6003-D14,60R	WMP35	1	●	018	6254959	99,20
P6003-D14,68R	WMP35	1	●	018	5833829	99,20
P6003-D14,80R	WMP35	1	●	018	6254970	99,20
P6003-D14,90R	WMP35	1	●	018	6254971	99,20
P6003-D15,00R	WMP35	1	●	018	5656140	99,20

Bezeichnung / Designation	Sorte / Grade	VE / US		Disc. Gr.	Article No.	EURO Stück / piece
P6003-D15,09R	WMP35	1	●	018	6254973	99,20
P6003-D15,20R	WMP35	1	●	018	6254974	99,20
P6003-D15,30R	WMP35	1	●	018	6254976	99,20
P6003-D15,40R	WMP35	1	●	018	6254990	99,20
P6003-D15,47R	WMP35	1	●	018	6254978	99,20
P6003-D15,50R	WMP35	1	●	018	5656141	99,20
P6003-D15,60R	WMP35	1	●	018	6254992	99,20
P6003-D15,70R	WMP35	1	●	018	5833850	99,20
P6003-D15,80R	WMP35	1	●	018	6254993	99,20
P6003-D15,87R	WMP35	1	●	018	5833851	99,20
P6003-D16,00R	WMP35	1	●	018	5656168	105,00
P6003-D16,13R	WMP35	1	●	018	6255988	105,00
P6003-D16,26R	WMP35	1	●	018	5833852	105,00
P6003-D16,43R	WMP35	1	●	018	6255989	105,00
P6003-D16,50R	WMP35	1	●	018	5833853	105,00
P6003-D16,66R	WMP35	1	●	018	5833854	105,00
P6003-D16,70R	WMP35	1	●	018	6256030	105,00
P6003-D17,00R	WMP35	1	●	018	5656180	105,00
P6003-D17,07R	WMP35	1	●	018	6254996	105,00
P6003-D17,20R	WMP35	1	●	018	6514489	105,00
P6003-D17,45R	WMP35	1	●	018	5833855	105,00
P6003-D17,50R	WMP35	1	●	018	5656181	105,00
P6003-D17,70R	WMP35	1	●	018	5833857	105,00
P6003-D17,86R	WMP35	1	●	018	6254998	105,00
P6003-D18,00R	WMP35	1	●	018	5626644	111,00
P6003-D18,24R	WMP35	1	●	018	5833858	111,00
P6003-D18,50R	WMP35	1	●	018	5833921	111,00
P6003-D18,65R	WMP35	1	●	018	6254999	111,00
P6003-D18,70R	WMP35	1	●	018	6256033	111,00
P6003-D18,80R	WMP35	1	●	018	6256035	111,00
P6003-D19,00R	WMP35	1	●	018	5656185	111,00
P6003-D19,05R	WMP35	1	●	018	5833922	111,00
P6003-D19,20R	WMP35	1	●	018	6256036	111,00
P6003-D19,25R	WMP35	1	●	018	5833923	111,00
P6003-D19,30R	WMP35	1	●	018	6256037	111,00
P6003-D19,43R	WMP35	1	●	018	5833924	111,00
P6003-D19,50R	WMP35	1	●	018	5656187	111,00
P6003-D19,60R	WMP35	1	●	018	6256038	111,00
P6003-D19,70R	WMP35	1	●	018	5833925	111,00
P6003-D19,84R	WMP35	1	●	018	5833926	111,00
P6003-D20,00R	WMP35	1	●	018	5656188	117,00
P6003-D20,20R	WMP35	1	●	018	6255000	117,00
P6003-D20,24R	WMP35	1	●	018	5833928	117,00
P6003-D20,50R	WMP35	1	●	018	5656200	117,00
P6003-D20,62R	WMP35	1	●	018	5833929	117,00
P6003-D20,70R	WMP35	1	●	018	6255128	117,00
P6003-D21,00R	WMP35	1	●	018	5656202	117,00
P6003-D21,41R	WMP35	1	●	018	6255312	117,00
P6003-D21,50R	WMP35	1	●	018	5833951	117,00
P6003-D21,70R	WMP35	1	●	018	6255313	117,00
P6003-D21,83R	WMP35	1	●	018	5833952	117,00
P6003-D22,00R	WMP35	1	●	018	5656203	123,00
P6003-D22,22R	WMP35	1	●	018	5833953	123,00
P6003-D22,42R	WMP35	1	●	018	6256039	123,00
P6003-D22,47R	WMP35	1	●	018	6256050	123,00
P6003-D22,50R	WMP35	1	●	018	5833954	123,00
P6003-D22,62R	WMP35	1	●	018	6255314	123,00
P6003-D22,70R	WMP35	1	●	018	6255318	123,00
P6003-D22,77R	WMP35	1	●	018	6256051	123,00
P6003-D23,00R	WMP35	1	●	018	5656205	123,00
P6003-D23,39R	WMP35	1	●	018	5833955	123,00
P6003-D23,50R	WMP35	1	●	018	5833956	123,00
P6003-D23,70R	WMP35	1	●	018	6255380	123,00
P6003-D23,80R	WMP35	1	●	018	5833957	123,00
P6003-D24,00R	WMP35	1	●	018	5656220	134,00
P6003-D24,21R	WMP35	1	●	018	6255383	134,00
P6003-D24,50R	WMP35	1	●	018	5833959	134,00
P6003-D24,59R	WMP35	1	●	018	6255384	134,00
P6003-D24,70R	WMP35	1	●	018	6255386	134,00
P6003-D25,00R	WMP35	1	●	018	5656221	134,00

Bezeichnung / Designation	Sorte / Grade	VE / US		Disc. Gr.	Article No.	EURO Stück / piece
P6003-D25,25R	WMP35	1	●	018	5833970	134,00
P6003-D25,40R	WMP35	1	●	018	5833971	134,00
P6003-D25,50R	WMP35	1	●	018	5656223	134,00
P6003-D25,65R	WMP35	1	●	018	5833973	134,00
P6003-D25,70R	WMP35	1	●	018	6256052	134,00
P6003-D25,80R	WMP35	1	●	018	6255387	134,00
P6003-D26,00R	WMP35	1	●	018	5638483	146,00
P6003-D26,25R	WMP35	1	●	018	6255389	146,00
P6003-D26,50R	WMP35	1	●	018	5656224	146,00
P6003-D26,59R	WMP35	1	●	018	6255390	146,00
P6003-D27,00R	WMP35	1	●	018	5656226	146,00
P6003-D27,38R	WMP35	1	●	018	6255391	146,00
P6003-D27,50R	WMP35	1	●	018	5833974	146,00
P6003-D27,78R	WMP35	1	●	018	6255392	146,00
P6003-D28,00R	WMP35	1	●	018	5656227	158,00
P6003-D28,17R	WMP35	1	●	018	6255393	158,00
P6003-D28,50R	WMP35	1	●	018	5833976	158,00
P6003-D28,57R	WMP35	1	●	018	5833977	158,00
P6003-D29,00R	WMP35	1	●	018	5656232	158,00
P6003-D29,37R	WMP35	1	●	018	6255394	158,00
P6003-D29,50R	WMP35	1	●	018	5656234	158,00
P6003-D29,77R	WMP35	1	●	018	6255395	158,00
P6003-D30,00R	WMP35	1	●	018	5626646	169,00
P6003-D30,15R	WMP35	1	●	018	6255396	169,00
P6003-D30,50R	WMP35	1	●	018	5638484	169,00
P6003-D31,00R	WMP35	1	●	018	5656235	169,00
P6003-D31,50R	WMP35	1	●	018	5833980	169,00
P6003-D31,75R	WMP35	1	●	018	5833981	169,00
P6003-D31,99R	WMP35	1	●	018	6255397	169,00
P6003-D32,00R	WMP35	1	●	018	5885202	181,00
P6003-D32,10R	WMP35	1	●	018	6256053	181,00
P6003-D33,00R	WMP35	1	●	018	5885203	181,00
P6003-D34,00R	WMP35	1	●	018	5885204	193,00
P6003-D35,00R	WMP35	1	●	018	5885205	193,00
P6003-D36,00R	WMP35	1	●	018	5885206	204,00
P6003-D37,00R	WMP35	1	●	018	5885207	204,00
P6003-D37,99R	WMP35	1	●	018	5885208	204,00
P6004-D12,00R	WNN25	1	●	018	5656239	93,40
P6004-D12,50R	WNN25	1	●	018	5656242	93,40
P6004-D13,00R	WNN25	1	●	018	5656244	93,40
P6004-D13,50R	WNN25	1	●	018	5656245	93,40
P6004-D14,00R	WNN25	1	●	018	5656247	99,20
P6004-D14,50R	WNN25	1	●	018	5656249	99,20
P6004-D14,80R	WNN25	1	●	018	5684484	99,20
P6004-D15,00R	WNN25	1	●	018	5656250	99,20
P6004-D15,50R	WNN25	1	●	018	5656251	99,20
P6004-D16,00R	WNN25	1	●	018	5656253	105,00
P6004-D16,50R	WNN25	1	●	018	5656255	105,00
P6004-D16,66R	WNN25	1	●	018	5684485	105,00
P6004-D17,00R	WNN25	1	●	018	5656256	105,00
P6004-D17,50R	WNN25	1	●	018	5656257	105,00
P6004-D17,70R	WNN25	1	●	018	5684487	105,00
P6004-D18,00R	WNN25	1	●	018	5656258	111,00
P6004-D18,50R	WNN25	1	●	018	5656259	111,00
P6004-D18,65R	WNN25	1	●	018	5684488	111,00
P6004-D19,00R	WNN25	1	●	018	5656260	111,00
P6004-D19,50R	WNN25	1	●	018	5656263	111,00
P6004-D19,70R	WNN25	1	●	018	5684490	111,00
P6004-D19,84R	WNN25	1	●	018	5684492	111,00
P6004-D20,00R	WNN25	1	●	018	5656264	117,00
P6004-D20,50R	WNN25	1	●	018	5656267	117,00
P6004-D21,00R	WNN25	1	●	018	5656268	117,00
P6004-D21,50R	WNN25	1	●	018	5656284	117,00
P6004-D21,70R	WNN25	1	●	018	5684493	117,00
P6004-D22,00R	WNN25	1	●	018	5656285	123,00
P6004-D22,50R	WNN25	1	●	018	5656286	123,00
P6004-D23,00R	WNN25	1	●	018	5656287	123,00
P6004-D23,50R	WNN25	1	●	018	5656289	123,00
P6004-D24,00R	WNN25	1	●	018	5656290	134,00
P6004-D24,50R	WNN25	1	●	018	5656292	134,00

Bezeichnung / Designation	Sorte / Grade	VE / US		Disc. Gr.	Article No.	EURO Stück / piece
P6004-D25,00R	WNN25	1	●	018	5656294	134,00
P6004-D25,50R	WNN25	1	●	018	5656295	134,00
P6004-D26,00R	WNN25	1	●	018	5656298	146,00
P6004-D26,50R	WNN25	1	●	018	5656300	146,00
P6004-D27,00R	WNN25	1	●	018	5656301	146,00
P6004-D27,50R	WNN25	1	●	018	5656302	146,00
P6004-D28,00R	WNN25	1	●	018	5656304	158,00
P6004-D28,50R	WNN25	1	●	018	5656305	158,00
P6004-D29,00R	WNN25	1	●	018	5656307	158,00
P6004-D29,50R	WNN25	1	●	018	5656310	158,00
P6004-D30,00R	WNN25	1	●	018	5656312	169,00
P6004-D30,50R	WNN25	1	●	018	5656313	169,00
P6004-D31,00R	WNN25	1	●	018	5656314	169,00
P6004-D31,50R	WNN25	1	●	018	5656315	169,00
P6005-D12,00R	WKK45C	1	●	018	6838079	93,40
P6005-D12,10R	WKK45C	1	●	018	6838080	93,40
P6005-D12,20R	WKK45C	1	●	018	6838081	93,40
P6005-D12,30R	WKK45C	1	●	018	6838082	93,40
P6005-D12,40R	WKK45C	1	●	018	6838083	93,40
P6005-D12,50R	WKK45C	1	●	018	6838084	93,40
P6005-D12,60R	WKK45C	1	●	018	6838085	93,40
P6005-D12,70R	WKK45C	1	●	018	6838086	93,40
P6005-D12,80R	WKK45C	1	●	018	6838087	93,40
P6005-D12,90R	WKK45C	1	●	018	6838088	93,40
P6005-D12,95R	WKK45C	1	●	018	6838089	93,40
P6005-D13,00R	WKK45C	1	●	018	6838090	93,40
P6005-D13,10R	WKK45C	1	●	018	6838091	93,40
P6005-D13,20R	WKK45C	1	●	018	6838093	93,40
P6005-D13,25R	WKK45C	1	●	018	6838094	93,40
P6005-D13,30R	WKK45C	1	●	018	6838095	93,40
P6005-D13,40R	WKK45C	1	●	018	6838096	93,40
P6005-D13,49R	WKK45C	1	●	018	6838097	93,40
P6005-D13,50R	WKK45C	1	●	018	6838098	93,40
P6005-D13,60R	WKK45C	1	●	018	6838099	93,40
P6005-D13,70R	WKK45C	1	●	018	6838100	93,40
P6005-D13,80R	WKK45C	1	●	018	6838101	93,40
P6005-D13,90R	WKK45C	1	●	018	6838103	93,40
P6005-D14,00R	WKK45C	1	●	018	6838104	99,20
P6005-D14,10R	WKK45C	1	●	018	6838105	99,20
P6005-D14,20R	WKK45C	1	●	018	6838106	99,20
P6005-D14,29R	WKK45C	1	●	018	6838107	99,20
P6005-D14,30R	WKK45C	1	●	018	6838108	99,20
P6005-D14,40R	WKK45C	1	●	018	6838109	99,20
P6005-D14,50R	WKK45C	1	●	018	6838110	99,20
P6005-D14,60R	WKK45C	1	●	018	6838111	99,20
P6005-D14,68R	WKK45C	1	●	018	6838112	99,20
P6005-D14,70R	WKK45C	1	●	018	6838113	99,20
P6005-D14,80R	WKK45C	1	●	018	6838114	99,20
P6005-D14,90R	WKK45C	1	●	018	6838115	99,20
P6005-D15,00R	WKK45C	1	●	018	6838116	99,20
P6005-D15,08R	WKK45C	1	●	018	6838117	99,20
P6005-D15,09R	WKK45C	1	●	018	6838118	99,20
P6005-D15,10R	WKK45C	1	●	018	6838119	99,20
P6005-D15,20R	WKK45C	1	●	018	6838120	99,20
P6005-D15,30R	WKK45C	1	●	018	6838121	99,20
P6005-D15,40R	WKK45C	1	●	018	6838122	99,20
P6005-D15,50R	WKK45C	1	●	018	6838125	99,20
P6005-D15,60R	WKK45C	1	●	018	6838126	99,20
P6005-D15,70R	WKK45C	1	●	018	6838127	99,20
P6005-D15,80R	WKK45C	1	●	018	6838128	99,20
P6005-D15,88R	WKK45C	1	●	018	6838130	99,20
P6005-D15,90R	WKK45C	1	●	018	6838131	99,20
P6005-D16,00R	WKK45C	1	●	018	6838132	105,00
P6005-D16,13R	WKK45C	1	●	018	6838133	105,00
P6005-D16,26R	WKK45C	1	●	018	6838134	105,00
P6005-D16,27R	WKK45C	1	●	018	6838135	105,00
P6005-D16,43R	WKK45C	1	●	018	6838136	105,00
P6005-D16,50R	WKK45C	1	●	018	6838137	105,00
P6005-D16,66R	WKK45C	1	●	018	6838138	105,00
P6005-D16,67R	WKK45C	1	●	018	6838139	105,00

Bezeichnung / Designation	Sorte / Grade	VE / US		Disc. Gr.	Article No.	EURO Stück / piece
P6005-D16,70R	WKK45C	1	●	018	6838140	**105,00**
P6005-D16,80R	WKK45C	1	●	018	6838141	**105,00**
P6005-D17,00R	WKK45C	1	●	018	6838142	**105,00**
P6005-D17,07R	WKK45C	1	●	018	6838143	**105,00**
P6005-D17,20R	WKK45C	1	●	018	6838144	**105,00**
P6005-D17,45R	WKK45C	1	●	018	6838145	**105,00**
P6005-D17,50R	WKK45C	1	●	018	6838147	**105,00**
P6005-D17,70R	WKK45C	1	●	018	6838148	**105,00**
P6005-D17,80R	WKK45C	1	●	018	6838149	**105,00**
P6005-D17,86R	WKK45C	1	●	018	6838150	**105,00**
P6005-D18,00R	WKK45C	1	●	018	6838151	**111,00**
P6005-D18,24R	WKK45C	1	●	018	6838152	**111,00**
P6005-D18,26R	WKK45C	1	●	018	6838153	**111,00**
P6005-D18,50R	WKK45C	1	●	018	6838154	**111,00**
P6005-D18,65R	WKK45C	1	●	018	6838155	**111,00**
P6005-D18,70R	WKK45C	1	●	018	6838156	**111,00**
P6005-D18,80R	WKK45C	1	●	018	6838157	**111,00**
P6005-D19,00R	WKK45C	1	●	018	6838158	**111,00**
P6005-D19,05R	WKK45C	1	●	018	6838159	**111,00**
P6005-D19,20R	WKK45C	1	●	018	6838160	**111,00**
P6005-D19,25R	WKK45C	1	●	018	6838161	**111,00**
P6005-D19,30R	WKK45C	1	●	018	6838162	**111,00**
P6005-D19,35R	WKK45C	1	●	018	8271005	**111,00**
P6005-D19,43R	WKK45C	1	●	018	6838163	**111,00**
P6005-D19,50R	WKK45C	1	●	018	6838165	**111,00**
P6005-D19,60R	WKK45C	1	●	018	6838166	**111,00**
P6005-D19,70R	WKK45C	1	●	018	6838167	**111,00**
P6005-D19,80R	WKK45C	1	●	018	6838168	**111,00**
P6005-D19,84R	WKK45C	1	●	018	6838169	**111,00**
P6005-D20,00R	WKK45C	1	●	018	6838170	**117,00**
P6005-D20,20R	WKK45C	1	●	018	6838171	**117,00**
P6005-D20,24R	WKK45C	1	●	018	6838172	**117,00**
P6005-D20,50R	WKK45C	1	●	018	6838173	**117,00**
P6005-D20,62R	WKK45C	1	●	018	6838174	**117,00**
P6005-D20,70R	WKK45C	1	●	018	6838176	**117,00**
P6005-D21,00R	WKK45C	1	●	018	6838177	**117,00**
P6005-D21,12R	WKK45C	1	●	018	8271006	**117,00**
P6005-D21,41R	WKK45C	1	●	018	6838178	**117,00**
P6005-D21,43R	WKK45C	1	●	018	6838179	**117,00**
P6005-D21,50R	WKK45C	1	●	018	6838180	**117,00**
P6005-D21,70R	WKK45C	1	●	018	6838181	**117,00**
P6005-D21,83R	WKK45C	1	●	018	6838182	**117,00**
P6005-D22,00R	WKK45C	1	●	018	6838183	**123,00**
P6005-D22,22R	WKK45C	1	●	018	6838184	**123,00**
P6005-D22,23R	WKK45C	1	●	018	6838185	**123,00**
P6005-D22,42R	WKK45C	1	●	018	6838186	**123,00**
P6005-D22,50R	WKK45C	1	●	018	6838188	**123,00**
P6005-D22,70R	WKK45C	1	●	018	6838190	**123,00**
P6005-D22,77R	WKK45C	1	●	018	6838191	**123,00**
P6005-D23,00R	WKK45C	1	●	018	6838192	**123,00**
P6005-D23,02R	WKK45C	1	●	018	6838193	**123,00**
P6005-D23,39R	WKK45C	1	●	018	6838194	**123,00**
P6005-D23,50R	WKK45C	1	●	018	6838195	**123,00**
P6005-D23,70R	WKK45C	1	●	018	6838196	**123,00**
P6005-D23,80R	WKK45C	1	●	018	6838197	**123,00**
P6005-D23,81R	WKK45C	1	●	018	6838198	**123,00**
P6005-D24,00R	WKK45C	1	●	018	6838199	**134,00**
P6005-D24,21R	WKK45C	1	●	018	6838200	**134,00**
P6005-D24,50R	WKK45C	1	●	018	6838201	**134,00**
P6005-D24,59R	WKK45C	1	●	018	6838202	**134,00**
P6005-D24,61R	WKK45C	1	●	018	6838203	**134,00**
P6005-D24,70R	WKK45C	1	●	018	6838204	**134,00**
P6005-D25,00R	WKK45C	1	●	018	6838205	**134,00**
P6005-D25,25R	WKK45C	1	●	018	6838206	**134,00**
P6005-D25,40R	WKK45C	1	●	018	6838207	**134,00**
P6005-D25,50R	WKK45C	1	●	018	6838208	**134,00**
P6005-D25,70R	WKK45C	1	●	018	6838210	**134,00**
P6005-D25,80R	WKK45C	1	●	018	6838211	**134,00**
P6005-D26,00R	WKK45C	1	●	018	6838212	**146,00**
P6005-D26,25R	WKK45C	1	●	018	6838213	**146,00**

Bezeichnung / Designation	Sorte / Grade	VE / US		Disc. Gr.	Article No.	EURO Stück / piece
P6005-D26,50R	WKK45C	1	●	018	6838214	**146,00**
P6005-D26,59R	WKK45C	1	●	018	6838215	**146,00**
P6005-D27,00R	WKK45C	1	●	018	6838216	**146,00**
P6005-D27,50R	WKK45C	1	●	018	6838218	**146,00**
P6005-D27,78R	WKK45C	1	●	018	6838219	**146,00**
P6005-D28,00R	WKK45C	1	●	018	6838220	**158,00**
P6005-D28,17R	WKK45C	1	●	018	6838221	**158,00**
P6005-D28,50R	WKK45C	1	●	018	6838222	**158,00**
P6005-D28,57R	WKK45C	1	●	018	6838223	**158,00**
P6005-D29,00R	WKK45C	1	●	018	6838224	**158,00**
P6005-D29,50R	WKK45C	1	●	018	6838226	**158,00**
P6005-D29,77R	WKK45C	1	●	018	6838227	**158,00**
P6005-D30,00R	WKK45C	1	●	018	6838228	**169,00**
P6005-D30,15R	WKK45C	1	●	018	6838229	**169,00**
P6005-D30,50R	WKK45C	1	●	018	6838230	**169,00**
P6005-D31,00R	WKK45C	1	●	018	6838231	**169,00**
P6005-D31,50R	WKK45C	1	●	018	6838232	**169,00**
P6005-D31,75R	WKK45C	1	●	018	6838233	**169,00**
P6005-D31,99R	WKK45C	1	●	018	6838234	**169,00**
P6005-D32,00R	WKK45C	1	●	018	6838235	**181,00**
P6005-D32,10R	WKK45C	1	●	018	6838236	**181,00**
P6005-D33,00R	WKK45C	1	●	018	6838237	**181,00**
P6005-D34,00R	WKK45C	1	●	018	6838238	**193,00**
P6005-D35,00R	WKK45C	1	●	018	6838239	**193,00**
P6005-D36,00R	WKK45C	1	●	018	6838240	**204,00**
P6005-D37,00R	WKK45C	1	●	018	6838241	**204,00**
P6005-D37,99R	WKK45C	1	●	018	6838242	**204,00**
P6006-D12,00R	WPP25	1	●	018	8060250	**93,40**
P6006-D12,10R	WPP25	1	●	018	8202344	**93,40**
P6006-D12,20R	WPP25	1	●	018	8202345	**93,40**
P6006-D12,30R	WPP25	1	●	018	8202346	**93,40**
P6006-D12,40R	WPP25	1	●	018	8202347	**93,40**
P6006-D12,50R	WPP25	1	●	018	8060251	**93,40**
P6006-D12,60R	WPP25	1	●	018	8202348	**93,40**
P6006-D12,70R	WPP25	1	●	018	8060252	**93,40**
P6006-D12,80R	WPP25	1	●	018	8202349	**93,40**
P6006-D12,90R	WPP25	1	●	018	8202380	**93,40**
P6006-D12,95R	WPP25	1	●	018	8202381	**93,40**
P6006-D13,00R	WPP25	1	●	018	8060253	**93,40**
P6006-D13,11R	WPP25	1	●	018	8202382	**93,40**
P6006-D13,20R	WPP25	1	●	018	8202383	**93,40**
P6006-D13,25R	WPP25	1	●	018	8202384	**93,40**
P6006-D13,30R	WPP25	1	●	018	8202385	**93,40**
P6006-D13,35R	WPP25	1	●	018	8202386	**93,40**
P6006-D13,40R	WPP25	1	●	018	8202387	**93,40**
P6006-D13,45R	WPP25	1	●	018	8202388	**93,40**
P6006-D13,50R	WPP25	1	●	018	8060254	**93,40**
P6006-D13,60R	WPP25	1	●	018	8202389	**93,40**
P6006-D13,70R	WPP25	1	●	018	8060255	**93,40**
P6006-D13,80R	WPP25	1	●	018	8202390	**93,40**
P6006-D13,89R	WPP25	1	●	018	8202391	**93,40**
P6006-D14,00R	WPP25	1	●	018	8060256	**99,20**
P6006-D14,10R	WPP25	1	●	018	8060257	**99,20**
P6006-D14,20R	WPP25	1	●	018	8060258	**99,20**
P6006-D14,30R	WPP25	1	●	018	8060259	**99,20**
P6006-D14,40R	WPP25	1	●	018	8202392	**99,20**
P6006-D14,50R	WPP25	1	●	018	8060260	**99,20**
P6006-D14,60R	WPP25	1	●	018	8202393	**99,20**
P6006-D14,68R	WPP25	1	●	018	8060261	**99,20**
P6006-D14,80R	WPP25	1	●	018	8202394	**99,20**
P6006-D14,90R	WPP25	1	●	018	8202395	**99,20**
P6006-D15,00R	WPP25	1	●	018	8060262	**99,20**
P6006-D15,09R	WPP25	1	●	018	8060263	**99,20**
P6006-D15,20R	WPP25	1	●	018	8060264	**99,20**
P6006-D15,30R	WPP25	1	●	018	8060265	**99,20**
P6006-D15,35R	WPP25	1	●	018	8202396	**99,20**
P6006-D15,40R	WPP25	1	●	018	8202397	**99,20**
P6006-D15,47R	WPP25	1	●	018	8202398	**99,20**
P6006-D15,50R	WPP25	1	●	018	8060266	**99,20**
P6006-D15,60R	WPP25	1	●	018	8202399	**99,20**

Bezeichnung / Designation	Sorte / Grade	VE / US		Disc. Gr.	Article No.	EURO Stück / piece
P6006-D15,70R	WPP25	1	●	018	8060267	99,20
P6006-D15,80R	WPP25	1	●	018	8202400	99,20
P6006-D15,87R	WPP25	1	●	018	8060268	99,20
P6006-D16,00R	WPP25	1	●	018	8060269	105,00
P6006-D16,13R	WPP25	1	●	018	8202401	99,20
P6006-D16,26R	WPP25	1	●	018	8060270	105,00
P6006-D16,43R	WPP25	1	●	018	8202402	105,00
P6006-D16,50R	WPP25	1	●	018	8060271	105,00
P6006-D16,66R	WPP25	1	●	018	8060272	105,00
P6006-D16,70R	WPP25	1	●	018	8060273	105,00
P6006-D16,85R	WPP25	1	●	018	8202403	105,00
P6006-D17,00R	WPP25	1	●	018	8060274	105,00
P6006-D17,07R	WPP25	1	●	018	8060275	105,00
P6006-D17,20R	WPP25	1	●	018	8202404	105,00
P6006-D17,35R	WPP25	1	●	018	8202405	105,00
P6006-D17,45R	WPP25	1	●	018	8060276	105,00
P6006-D17,50R	WPP25	1	●	018	8060277	105,00
P6006-D17,60R	WPP25	1	●	018	8202406	105,00
P6006-D17,70R	WPP25	1	●	018	8060278	105,00
P6006-D17,86R	WPP25	1	●	018	8060279	105,00
P6006-D18,00R	WPP25	1	●	018	8060280	111,00
P6006-D18,24R	WPP25	1	●	018	8060281	111,00
P6006-D18,50R	WPP25	1	●	018	8060282	111,00
P6006-D18,65R	WPP25	1	●	018	8060283	111,00
P6006-D18,70R	WPP25	1	●	018	8060284	111,00
P6006-D18,80R	WPP25	1	●	018	8202407	111,00
P6006-D19,00R	WPP25	1	●	018	8060285	111,00
P6006-D19,05R	WPP25	1	●	018	8060286	111,00
P6006-D19,10R	WPP25	1	●	018	8202408	111,00
P6006-D19,20R	WPP25	1	●	018	8202409	111,00
P6006-D19,25R	WPP25	1	●	018	8060287	111,00
P6006-D19,30R	WPP25	1	●	018	8202410	111,00
P6006-D19,35R	WPP25	1	●	018	8202411	111,00
P6006-D19,43R	WPP25	1	●	018	8202412	111,00
P6006-D19,50R	WPP25	1	●	018	8060288	111,00
P6006-D19,60R	WPP25	1	●	018	8202413	111,00
P6006-D19,70R	WPP25	1	●	018	8060289	111,00
P6006-D19,84R	WPP25	1	●	018	8060290	111,00
P6006-D20,00R	WPP25	1	●	018	8060291	117,00
P6006-D20,20R	WPP25	1	●	018	8202414	117,00
P6006-D20,24R	WPP25	1	●	018	8060292	117,00
P6006-D20,50R	WPP25	1	●	018	8060293	117,00
P6006-D20,62R	WPP25	1	●	018	8060294	117,00
P6006-D20,70R	WPP25	1	●	018	8060295	117,00
P6006-D20,85R	WPP25	1	●	018	8202415	117,00
P6006-D21,00R	WPP25	1	●	018	8060296	117,00
P6006-D21,41R	WPP25	1	●	018	8202416	117,00
P6006-D21,50R	WPP25	1	●	018	8060297	117,00
P6006-D21,70R	WPP25	1	●	018	8060298	117,00
P6006-D21,83R	WPP25	1	●	018	8202417	117,00
P6006-D22,00R	WPP25	1	●	018	8060299	123,00
P6006-D22,22R	WPP25	1	●	018	8060300	123,00
P6006-D22,42R	WPP25	1	●	018	8202418	117,00
P6006-D22,47R	WPP25	1	●	018	8202419	123,00
P6006-D22,50R	WPP25	1	●	018	8060301	123,00
P6006-D22,60R	WPP25	1	●	018	8202420	123,00
P6006-D22,62R	WPP25	1	●	018	8202421	123,00
P6006-D22,70R	WPP25	1	●	018	8060302	123,00
P6006-D22,77R	WPP25	1	●	018	8202422	123,00
P6006-D23,00R	WPP25	1	●	018	8060303	123,00
P6006-D23,10R	WPP25	1	●	018	8202423	123,00
P6006-D23,39R	WPP25	1	●	018	8202424	123,00
P6006-D23,50R	WPP25	1	●	018	8060304	123,00
P6006-D23,70R	WPP25	1	●	018	8202425	123,00
P6006-D23,80R	WPP25	1	●	018	8060305	123,00
P6006-D24,00R	WPP25	1	●	018	8060306	134,00
P6006-D24,21R	WPP25	1	●	018	8202426	134,00
P6006-D24,50R	WPP25	1	●	018	8060307	134,00
P6006-D24,59R	WPP25	1	●	018	8202427	134,00
P6006-D24,70R	WPP25	1	●	018	8060308	134,00

Bezeichnung / Designation	Sorte / Grade	VE / US		Disc. Gr.	Article No.	EURO Stück / piece
P6006-D25,00R	WPP25	1	●	018	8060309	134,00
P6006-D25,25R	WPP25	1	●	018	8060310	134,00
P6006-D25,40R	WPP25	1	●	018	8060311	134,00
P6006-D25,50R	WPP25	1	●	018	8060312	134,00
P6006-D25,60R	WPP25	1	●	018	8202428	134,00
P6006-D25,65R	WPP25	1	●	018	8060313	134,00
P6006-D25,70R	WPP25	1	●	018	8060314	134,00
P6006-D25,80R	WPP25	1	●	018	8060315	134,00
P6006-D26,00R	WPP25	1	●	018	8060316	146,00
P6006-D26,25R	WPP25	1	●	018	8060317	146,00
P6006-D26,50R	WPP25	1	●	018	8060318	146,00
P6006-D26,59R	WPP25	1	●	018	8202429	146,00
P6006-D27,00R	WPP25	1	●	018	8060319	146,00
P6006-D27,38R	WPP25	1	●	018	8202430	146,00
P6006-D27,50R	WPP25	1	●	018	8060320	146,00
P6006-D27,78R	WPP25	1	●	018	8202431	146,00
P6006-D28,00R	WPP25	1	●	018	8060321	158,00
P6006-D28,17R	WPP25	1	●	018	8202432	158,00
P6006-D28,35R	WPP25	1	●	018	8202433	158,00
P6006-D28,50R	WPP25	1	●	018	8060322	158,00
P6006-D28,57R	WPP25	1	●	018	8060323	158,00
P6006-D29,00R	WPP25	1	●	018	8060324	158,00
P6006-D29,10R	WPP25	1	●	018	8202434	158,00
P6006-D29,37R	WPP25	1	●	018	8202435	158,00
P6006-D29,50R	WPP25	1	●	018	8060325	158,00
P6006-D29,77R	WPP25	1	●	018	8202436	158,00
P6006-D30,00R	WPP25	1	●	018	8060326	169,00
P6006-D30,15R	WPP25	1	●	018	8202437	169,00
P6006-D30,50R	WPP25	1	●	018	8060327	169,00
P6006-D31,00R	WPP25	1	●	018	8060328	169,00
P6006-D31,35R	WPP25	1	●	018	8202438	169,00
P6006-D31,50R	WPP25	1	●	018	8060329	169,00
P6006-D31,75R	WPP25	1	●	018	8060330	169,00
P6006-D31,99R	WPP25	1	●	018	8060331	169,00
P6006-D32,00R	WPP25	1	●	018	8060332	181,00
P6006-D32,10R	WPP25	1	●	018	8202439	181,00
P6006-D33,00R	WPP25	1	●	018	8060333	181,00
P6006-D34,00R	WPP25	1	●	018	8060334	193,00
P6006-D34,10R	WPP25	1	●	018	8202440	193,00
P6006-D34,60R	WPP25	1	●	018	8202441	193,00
P6006-D35,00R	WPP25	1	●	018	8060335	193,00
P6006-D36,00R	WPP25	1	●	018	8060336	204,00
P6006-D37,00R	WPP25	1	●	018	8060337	204,00
P6006-D37,99R	WPP25	1	●	018	8060338	204,00
P6500-0R-B88-E1	WXP15	1	●	011	5102288	50,30
P6500-1R-A88-E1	WXP15	1	●	011	5102275	45,30
P6500-1R-B88-E1	WXK05	1	●	011	5903584	50,30
P6500-1R-B88-E1	WXP15	1	●	011	5102289	50,30
P6500-1R-B88-E5	WXK05	1	●	011	5903589	50,30
P6500-2R-A88-E1	WXP15	1	●	011	5102276	45,30
P6500-2R-B88-E1	WXK05	1	●	011	5903583	50,30
P6500-2R-B88-E1	WXP15	1	●	011	5102290	50,30
P6500-2R-B88-E5	WXK05	1	●	011	5903588	50,30
P6500-4R-A88-E1	WXP15	1	●	011	5102277	50,20
P6500-4R-B88-E1	WXK05	1	●	011	5903581	55,90
P6500-4R-B88-E1	WXP15	1	●	011	5102291	55,90
P6500-4R-B88-E5	WXK05	1	●	011	5903587	55,90
PCBNL2525M12		1	●	060	5007921	105,00
PCBNL2525M16		1	●	060	5007922	105,00
PCBNL3232P16		1	●	060	5007923	141,00
PCBNL3232P19		1	●	060	5007924	141,00
PCBNR2525M12		1	●	060	5007917	105,00
PCBNR2525M16		1	●	060	5007918	105,00
PCBNR3232P16		1	●	060	5007919	141,00
PCBNR3232P19		1	●	060	5007920	141,00
PCFNR12CA-12		1	●	060	7583158	167,00
PCKNL2525M12		1	●	060	5007926	105,00
PCKNR2525M12		1	●	060	5007925	105,00
PCLNL12CA-12		1	●	060	5007850	167,00
PCLNL1616H09		1	●	060	6047334	89,10

Bezeichnung / Designation	Sorte / Grade	VE / US		Disc. Gr.	Article No.	EURO Stück / piece
PCLNL1616H12		1	●	060	5634163	89,10
PCLNL16CA-12		1	●	060	5007852	167,00
PCLNL2020K09		1	●	060	6047336	99,30
PCLNL2020K12		1	●	060	5007907	99,30
PCLNL20CA-16		1	●	060	5007854	204,00
PCLNL2525M09		1	●	060	6047338	105,00
PCLNL2525M12		1	●	060	5007908	105,00
PCLNL2525M16		1	●	060	5007910	105,00
PCLNL3225P12		1	●	060	5007909	116,00
PCLNL3225P16		1	●	060	5007911	116,00
PCLNL3232P16		1	●	060	5007912	141,00
PCLNL3232P19		1	●	060	5007913	141,00
PCLNL4040S19		1	●	060	5007914	188,00
PCLNL4040S25		1	●	060	5634108	188,00
PCLNL5050T25		1	●	060	6016394	283,00
PCLNR12CA-12		1	●	060	5007849	167,00
PCLNR1616H09		1	●	060	6047335	89,10
PCLNR1616H12		1	●	060	5634187	89,10
PCLNR16CA-12		1	●	060	5007851	167,00
PCLNR2020K09		1	●	060	6047337	99,30
PCLNR2020K12		1	●	060	5007899	99,30
PCLNR20CA-16		1	●	060	5007853	204,00
PCLNR2525M09		1	●	060	6047350	105,00
PCLNR2525M12		1	●	060	5007900	105,00
PCLNR2525M16		1	●	060	5007902	105,00
PCLNR25CA-19		1	■	060	7583159*	232,00
PCLNR3225P12		1	●	060	5007901	116,00
PCLNR3225P16		1	●	060	5007903	116,00
PCLNR3232P16		1	●	060	5007904	141,00
PCLNR3232P19		1	●	060	5007905	141,00
PCLNR4040S19		1	●	060	5007906	188,00
PCLNR4040S25		1	●	060	5634109	188,00
PCLNR5050T25		1	●	060	6016395	283,00
PCSNL2525M12		1	●	060	5007916	105,00
PCSNR2525M12		1	●	060	5007915	105,00
PDJNL1616H11		1	●	060	5008052	89,10
PDJNL2020K11		1	●	060	5008053	99,30
PDJNL2020K15		1	●	060	5008034	99,30
PDJNL2525M11		1	●	060	5008054	105,00
PDJNL2525M15		1	●	060	5008035	105,00
PDJNL3225P11		1	●	060	5008055	116,00
PDJNL3225P15		1	●	060	5008036	116,00
PDJNL3232P15		1	●	060	5008037	141,00
PDJNR1616H11		1	●	060	5008056	89,10
PDJNR2020K11		1	●	060	5008057	99,30
PDJNR2020K15		1	●	060	5008030	99,30
PDJNR2525M11		1	●	060	5008058	105,00
PDJNR2525M15		1	●	060	5008031	105,00
PDJNR3225P11		1	●	060	5008059	116,00
PDJNR3225P15		1	●	060	5008032	116,00
PDJNR3232P15		1	●	060	5008033	141,00
PK230		1	●	095	5006553	42,90
PK240		1	●	095	5041504	20,41
PK240-SET		1	●	095	5097975	31,80
PK241		1	●	095	5041496	9,56
PK241-SET		1	●	095	5098060	18,34
PK242		1	●	095	5041472	15,63
PK242-SET		1	●	095	5098061	26,90
PK243		1	●	095	5041498	19,29
PK243-SET		1	●	095	5098064	31,00
PK244		1	●	095	5042261	24,30
PK244-SET		1	●	095	5098059	33,10
PK245		1	●	095	5055787	24,30
PK245-SET		1	●	095	5098065	63,50
PK246		1	●	095	5055788	25,20
PK246-SET		1	●	095	5098066	66,90
PK247		1	●	095	5103266	30,20
PK251		1	●	095	5103271	41,60
PK252		1	●	095	5103273	45,50
PK253		1	●	095	5103274	54,30

Bezeichnung / Designation	Sorte / Grade	VE / US		Disc. Gr.	Article No.	EURO Stück / piece
PK254		1	●	095	6258370	24,30
PK254-SET		1	●	095	6258656	63,50
PK255		1	●	095	6313980	132,00
PK255-SET		1	●	095	6802175	136,00
PK256		1	●	095	6313986	132,00
PK256-SET		1	●	095	6802176	136,00
PK257-SET		1	●	095	6385821	19,78
PK258-SET		1	●	095	6385822	18,34
PK260		1	●	095	6728377	43,80
PK261L		1	●	095	6822733	81,50
PK261L-SET		1	●	095	6953175	91,90
PK261R		1	●	095	6822734	81,50
PK261R-SET		1	●	095	6953174	91,90
PK263		1	●	095	6940795	57,90
PK264		1	●	095	7036587	132,00
PK264-SET		1	●	095	7098014	136,00
PK265L		1	●	095	7316621	81,50
PK265L-SET		1	●	095	7463383	91,90
PK265R		1	●	095	7316620	81,50
PK265R-SET		1	●	095	7463384	91,90
PK266L		1	●	095	7036589	81,50
PK266L-SET		1	●	095	7098015	91,90
PK266R		1	●	095	7036588	81,50
PK266R-SET		1	●	095	7098016	91,90
PK267		1	●	095	7463381	132,00
PK267-SET		1	●	095	7463382	145,00
PK268		1	●	095	7631435	132,00
PK268-SET		1	●	095	7631436	145,00
PK301		1	●	095	5109430	40,70
PK301-SET		1	●	095	5236938	63,50
PRDCN2020K10		1	●	060	6913387	99,30
PRDCN2525M10		1	●	060	6913388	105,00
PRDCN2525M12		1	●	060	5008804	105,00
PRDCN3225P12		1	●	060	5008805	116,00
PRDCN3225P16		1	●	060	5008806	116,00
PRDCN3232P20		1	●	060	5674708	141,00
PRDCN4040S25		1	●	060	5008808	188,00
PRDCN5050U32		1	●	060	5674709	283,00
PRGCL2020K10		1	●	060	6913389	99,30
PRGCL2525M10		1	●	060	6913422	105,00
PRGCL2525M12		1	●	060	5008758	105,00
PRGCL3225P12		1	●	060	5008760	116,00
PRGCL3225P16		1	●	060	5008762	116,00
PRGCL3232P20		1	●	060	5674706	141,00
PRGCL4040S25		1	●	060	5008766	188,00
PRGCR2525M10		1	●	060	6913421	105,00
PRGCR2525M12		1	●	060	5008757	105,00
PRGCR3225P12		1	●	060	5008759	116,00
PRGCR3225P16		1	●	060	5008761	116,00
PRGCR3232P20		1	●	060	5674707	141,00
PRGCR4040S25		1	●	060	5008765	188,00
PSBNL2020K12		1	●	060	5007935	99,30
PSBNL2525M12		1	●	060	5007936	105,00
PSBNL2525M15		1	●	060	5007938	105,00
PSBNL3225P12		1	●	060	5007937	116,00
PSBNL3232P15		1	●	060	5007939	141,00
PSBNL3232P19		1	●	060	5007940	141,00
PSBNL4040S19		1	●	060	5007941	188,00
PSBNL4040S25		1	●	060	5007942	188,00
PSBNL5050T25		1	●	060	6016393	283,00
PSBNR2020K12		1	●	060	5007927	99,30
PSBNR2525M12		1	●	060	5007928	105,00
PSBNR2525M15		1	●	060	5007930	105,00
PSBNR3225P12		1	●	060	5007929	116,00
PSBNR3232P15		1	●	060	5007931	141,00
PSBNR3232P19		1	●	060	5007932	141,00
PSBNR4040S19		1	●	060	5007933	188,00
PSBNR4040S25		1	●	060	5007934	188,00
PSBNR5050T25		1	●	060	6016040	283,00
PSDNN1212F09		1	●	060	6047390	89,10

Bezeichnung / Designation	Sorte / Grade	VE / US		Disc. Gr.	Article No.	EURO Stück / piece
PSDNN1616H09		1	●	060	6047391	89,10
PSDNN2020K12		1	●	060	5008003	99,30
PSDNN2525M12		1	●	060	5007943	105,00
PSDNN3225P12		1	●	060	5007944	116,00
PSDNN3225P15		1	●	060	5007945	116,00
PSDNN3232P19		1	●	060	5007946	141,00
PSDNN4040S25		1	●	060	5674731	188,00
PSKNL12CA-12		1	●	060	5007858	167,00
PSKNL16CA-12		1	●	060	5007860	167,00
PSKNL2020K12		1	●	060	5007950	99,30
PSKNL2525M12		1	●	060	5007951	105,00
PSKNL3232P19		1	●	060	5007952	141,00
PSKNR10CA-09		1	●	060	7583221	167,00
PSKNR12CA-12		1	●	060	5007857	167,00
PSKNR16CA-12		1	●	060	5007859	167,00
PSKNR2020K12		1	●	060	5007947	99,30
PSKNR20CA-15		1	●	060	5007861	204,00
PSKNR2525M12		1	●	060	5007948	105,00
PSKNR25CA-19		1	■	060	7583220*	232,00
PSKNR3232P19		1	●	060	5007949	141,00
PSSNL1616H09		1	●	060	6047352	89,10
PSSNL2020K12		1	●	060	5007959	99,30
PSSNL2525M12		1	●	060	5007960	105,00
PSSNL2525M15		1	●	060	5007962	105,00
PSSNL3225P12		1	●	060	5007961	116,00
PSSNL3232P19		1	●	060	5007964	141,00
PSSNR12CA-12		1	●	060	7583222	167,00
PSSNR1616H09		1	●	060	6047353	89,10
PSSNR2020K12		1	●	060	5007953	99,30
PSSNR2525M12		1	●	060	5007954	105,00
PSSNR2525M15		1	●	060	5007956	105,00
PSSNR3225P12		1	●	060	5007955	116,00
PSSNR3232P19		1	●	060	5007958	141,00
PTFCL12CA-16		1	●	060	5009066	167,00
PTFCR12CA-16		1	●	060	5009065	167,00
PTFNL12CA-16		1	●	060	5007856	167,00
PTFNL1616H16		1	●	060	6047398	89,10
PTFNL2020K16		1	●	060	5007968	99,30
PTFNL2525M16		1	●	060	5007969	105,00
PTFNL3225P16		1	■	060	5007970*	116,00
PTFNR12CA-16		1	●	060	5007855	167,00
PTFNR1616H16		1	●	060	6047399	89,10
PTFNR2020K16		1	●	060	5007965	99,30
PTFNR2525M16		1	●	060	5007966	105,00
PTFNR3225P16		1	■	060	5007967*	116,00
PTGNL1616H11		1	○	060	6047394*	89,10
PTGNL1616H16		1	●	060	5674733	89,10
PTGNL2020K16		1	●	060	5007976	99,30
PTGNL2525M16		1	●	060	5007977	105,00
PTGNL3225P16		1	○	060	5007978*	116,00
PTGNL4040S27		1	●	060	6016590	188,00
PTGNR1616H11		1	●	060	6047395	89,10
PTGNR1616H16		1	●	060	5674734	89,10
PTGNR2020K16		1	●	060	5007971	99,30
PTGNR2525M16		1	●	060	5007972	105,00
PTGNR3225P16		1	●	060	5007973	116,00
PTGNR4040S27		1	●	060	6016591	188,00
PVHBL1616H11		1	●	060	5008869	89,10
PVHBL2020K11		1	●	060	5008871	99,30
PVHBL2020K16		1	●	060	5008746	99,30
PVHBL2525M11		1	●	060	5008873	105,00
PVHBL2525M16		1	●	060	5008748	105,00
PVHBL3225P16		1	●	060	5008750	116,00
PVHBR1616H11		1	●	060	5008868	89,10
PVHBR2020K11		1	●	060	5008870	99,30
PVHBR2020K16		1	●	060	5008745	99,30
PVHBR2525M11		1	●	060	5008872	105,00
PVHBR2525M16		1	●	060	5008747	105,00
PVHBR3225P16		1	●	060	5008749	116,00
PVJBL1616H11		1	●	060	5008875	89,10

Bezeichnung / Designation	Sorte / Grade	VE / US		Disc. Gr.	Article No.	EURO Stück / piece
PVJBL1616H16		1	●	060	5008800	89,10
PVJBL2020K11		1	●	060	5008877	99,30
PVJBL2020K16		1	●	060	5008737	99,30
PVJBL2525M11		1	●	060	5008879	105,00
PVJBL2525M16		1	●	060	5008739	105,00
PVJBL3225P16		1	●	060	5008741	116,00
PVJBR1616H11		1	●	060	5008874	89,10
PVJBR1616H16		1	●	060	5008799	89,10
PVJBR2020K11		1	●	060	5008876	99,30
PVJBR2020K16		1	●	060	5008736	99,30
PVJBR2525M11		1	●	060	5008878	105,00
PVJBR2525M16		1	●	060	5008738	105,00
PVJBR3225P16		1	●	060	5008740	116,00
PVVBN2020K11		1	●	060	5008881	99,30
PVVBN2020K16		1	●	060	5008742	99,30
PVVBN2525M11		1	●	060	5008882	105,00
PVVBN2525M16		1	●	060	5008743	105,00
PVVBN3225P16		1	●	060	5008744	116,00
PWLNL1616H06		1	●	060	5008004	89,10
PWLNL2020K06		1	●	060	5008008	99,30
PWLNL2020K08		1	●	060	5008018	99,30
PWLNL2525M06		1	●	060	5008010	105,00
PWLNL2525M08		1	●	060	5008019	105,00
PWLNL2525M10		1	●	060	5008012	105,00
PWLNL3225P08		1	●	060	5008020	116,00
PWLNL3225P10		1	●	060	5008006	116,00
PWLNR1616H06		1	●	060	5008007	89,10
PWLNR2020K06		1	●	060	5008009	99,30
PWLNR2020K08		1	●	060	5008021	99,30
PWLNR2525M06		1	●	060	5008011	105,00
PWLNR2525M08		1	●	060	5008022	105,00
PWLNR2525M10		1	●	060	5008013	105,00
PWLNR3225P08		1	●	060	5008023	116,00
PWLNR3225P10		1	●	060	5008005	116,00
Q25-SCLCL-17020-09		1	●	060	7956471	354,00
Q25-SCLCR-17020-09		1	●	060	7956470	354,00
Q25-SDUCL-17012-11X		1	●	060	7956477	354,00
Q25-SDUCL-17020-11		1	●	060	7956473	354,00
Q25-SDUCR-17012-11X		1	●	060	7956476	354,00
Q25-SDUCR-17020-11		1	●	060	7956472	354,00
Q25-SDXCL-17018-11		1	●	060	7956475	354,00
Q25-SDXCR-17018-11		1	●	060	7956474	354,00
Q25-STFCL-17020-11		1	●	060	7956479	354,00
Q25-STFCR-17020-11		1	●	060	7956478	354,00
Q25-SVUBL-17020-11		1	●	060	7956481	354,00
Q25-SVUBR-17020-11		1	●	060	7956480	354,00
Q32-DCLNL-22032-12		1	●	060	7796342	396,00
Q32-DCLNR-22032-12		1	●	060	7796341	396,00
Q32-DDUNL-22032-11		1	●	060	7956255	396,00
Q32-DDUNL-22032-15		1	●	060	7796350	396,00
Q32-DDUNR-22032-11		1	●	060	7956254	396,00
Q32-DDUNR-22032-15		1	●	060	7796349	396,00
Q32-DWLNL-22032-06		1	●	060	7956259	396,00
Q32-DWLNL-22035-08		1	●	060	7796356	396,00
Q32-DWLNR-22032-06		1	●	060	7956258	396,00
Q32-DWLNR-22035-08		1	●	060	7796355	396,00
Q32-SCLCL-22032-09		1	●	060	7796362	396,00
Q32-SCLCL-22032-12		1	●	060	7796364	396,00
Q32-SCLCR-22032-09		1	●	060	7796361	396,00
Q32-SCLCR-22032-12		1	●	060	7796363	396,00
Q32-SDUCL-22018-11X		1	●	060	7796386	396,00
Q32-SDUCL-22032-11		1	●	060	7796374	396,00
Q32-SDUCR-22018-11X		1	●	060	7796385	396,00
Q32-SDUCR-22032-11		1	●	060	7796373	396,00
Q32-SDXCL-22025-11		1	●	060	7796380	396,00
Q32-SDXCR-22025-11		1	●	060	7796379	396,00
Q32-STFCL-22032-16		1	●	060	7796392	396,00
Q32-STFCR-22032-16		1	●	060	7796391	396,00
Q32-SVUBL-22032-16		1	●	060	7796398	396,00
Q32-SVUBR-22032-16		1	●	060	7796397	396,00

Bezeichnung / Designation	Sorte / Grade	VE / US		Disc. Gr.	Article No.	EURO Stück / piece
Q40-DCLNL-27032-12		1	●	060	7796344	417,00
Q40-DCLNR-27032-12		1	●	060	7796343	417,00
Q40-DDUNL-27032-11		1	●	060	7956257	417,00
Q40-DDUNL-27032-15		1	●	060	7796352	417,00
Q40-DDUNR-27032-11		1	●	060	7956256	417,00
Q40-DDUNR-27032-15		1	●	060	7796351	417,00
Q40-DWLNL-27037-08		1	●	060	7796358	417,00
Q40-DWLNR-27037-08		1	●	060	7796357	417,00
Q40-SCLCL-27032-09		1	●	060	7796366	417,00
Q40-SCLCL-27032-12		1	●	060	7796368	417,00
Q40-SCLCR-27032-09		1	●	060	7796365	417,00
Q40-SCLCR-27032-12		1	●	060	7796367	417,00
Q40-SDUCL-27017-11X		1	●	060	7796388	417,00
Q40-SDUCL-27032-11		1	●	060	7796376	417,00
Q40-SDUCR-27017-11X		1	●	060	7796387	417,00
Q40-SDUCR-27032-11		1	●	060	7796375	417,00
Q40-SDXCL-27025-11		1	●	060	7796382	417,00
Q40-SDXCR-27025-11		1	●	060	7796381	417,00
Q40-STFCL-27032-16		1	●	060	7796394	417,00
Q40-STFCR-27032-16		1	●	060	7796393	417,00
Q40-SVUBL-27032-16		1	●	060	7796400	417,00
Q40-SVUBR-27032-16		1	●	060	7796399	417,00
Q50-DCLNL-32032-12		1	●	060	7796346	437,00
Q50-DCLNL-32037-16		1	●	060	7796348	437,00
Q50-DCLNR-32032-12		1	●	060	7796345	437,00
Q50-DCLNR-32037-16		1	●	060	7796347	437,00
Q50-DDUNL-32032-15		1	●	060	7796354	437,00
Q50-DDUNR-32032-15		1	●	060	7796353	437,00
Q50-DWLNL-32038-08		1	●	060	7796360	437,00
Q50-DWLNR-32038-08		1	●	060	7796359	437,00
Q50-SCLCL-32032-09		1	●	060	7796370	437,00
Q50-SCLCL-32032-12		1	●	060	7796372	437,00
Q50-SCLCR-32032-09		1	●	060	7796369	437,00
Q50-SCLCR-32032-12		1	●	060	7796371	437,00
Q50-SDUCL-32017-11X		1	●	060	7796390	437,00
Q50-SDUCL-32032-11		1	●	060	7796378	437,00
Q50-SDUCR-32017-11X		1	●	060	7796389	437,00
Q50-SDUCR-32032-11		1	●	060	7796377	437,00
Q50-SDXCL-32025-11		1	●	060	7796384	437,00
Q50-SDXCR-32025-11		1	●	060	7796383	437,00
Q50-STFCL-32032-16		1	●	060	7796396	437,00
Q50-STFCR-32032-16		1	●	060	7796395	437,00
Q50-SVUBL-32032-16		1	●	060	7796402	437,00
Q50-SVUBR-32032-16		1	●	060	7796401	437,00
RCGT0502M0-PF5	WS10	10	●	029	5873779	7,99
RCGT0602M0-MN2	WN10	10	●	028	8132988	7,72
RCGT0602M0-MN2	WNN10	10	●	028	6955709	9,44
RCGT0803M0-MN2	WN10	10	●	028	8132989	8,51
RCGT0803M0-MN2	WNN10	10	●	028	6955710	10,40
RCGT0803M0-PF5	WSM30	10	●	029	5357518	11,27
RCGT10T3M0-MN2	WN10	10	●	028	8132990	9,67
RCGT10T3M0-MN2	WNN10	10	●	028	6955711	11,78
RCGT10T3M0-PF5	WSM30	10	●	029	5357519	12,81
RCGT120400-MN2	WNN10	10	●	028	6955712	14,16
RCGT1204M0-MN2	WN10	10	●	028	8132991	11,60
RCGT1204M0-MN2	WNN10	10	●	028	6955713	14,16
RCGT1204M0-PF5	WS10	10	●	029	5873835	12,59
RCGX060600E	WIS30	10	●	024	8377370	29,30
RCGX060600T01020	WIS10	10	●	024	6188135	29,30
RCGX060600T01020	WIS30	10	●	024	8377371	29,30
RCGX090700E	WIS10	10	●	024	6188163	29,30
RCGX090700E	WIS30	10	●	024	8377372	29,30
RCGX090700T01020	WIS10	10	●	024	6188161	29,30
RCGX090700T01020	WWS20	10	●	024	6189016	52,10
RCGX120700E	WIS10	10	●	024	6188171	31,50
RCGX120700E	WIS30	10	●	024	8377373	31,50
RCGX120700T01020	WIS10	10	●	024	6188166	31,50
RCGX120700T01020	WIS30	10	●	024	8377374	31,50
RCMT0602M0-FM4	WSM10S	10	●	029	6917258	8,17
RCMT0602M0-FM4	WSM20S	10	●	029	6917259	8,17

Bezeichnung / Designation	Sorte / Grade	VE / US		Disc. Gr.	Article No.	EURO Stück / piece
RCMT0602M0-FP4	WPP10G	10	●	029	8204990	8,42
RCMT0602M0-FP4	WPP20G	10	●	029	8204959	8,42
RCMT0602M0-FP4	WPP20S	10	■	029	6440438[1]	8,42
RCMT0602M0-RK4	WKK20S	10	●	029	6651089	8,17
RCMT0602M0-RM4	WSM20S	10	●	029	6917300	8,17
RCMT0602M0-RM4	WSM30S	10	●	029	6917301	8,17
RCMT0602M0-RP4	WPP20G	10	●	029	8204991	8,42
RCMT0602M0-RP4	WPP30G	10	●	029	8204992	8,42
RCMT060300-RM4	WSM20S	10	●	029	6917302	8,59
RCMT060300-RP4	WPP20G	10	●	029	8204993	8,84
RCMT0803M0-FM4	WSM10S	10	●	029	6917260	9,01
RCMT0803M0-FM4	WSM20S	10	●	029	6917261	9,01
RCMT0803M0-FM4	WSM30S	10	●	029	6917262	9,01
RCMT0803M0-FP4	WPP20G	10	●	029	8204994	9,28
RCMT0803M0-RK4	WKK20S	10	●	029	6651100	9,01
RCMT0803M0-RM4	WMP20S	10	●	029	6631240	9,01
RCMT0803M0-RM4	WSM20S	10	●	029	6839119	9,01
RCMT0803M0-RM4	WSM30S	10	●	029	6839120	9,01
RCMT0803M0-RP4	WPP10G	10	●	029	8204997	9,28
RCMT0803M0-RP4	WPP20G	10	●	029	8204995	9,28
RCMT0803M0-RP4	WPP30G	10	●	029	8204996	9,28
RCMT09T300-RM4	WSM20S	10	●	029	6917303	9,81
RCMT09T300-RP4	WPP20G	10	●	029	8204998	10,10
RCMT09T300-RP4	WPP20S	10	■	029	6461217[1]	10,10
RCMT10T3M0-FM4	WSM10S	10	●	029	6917263	10,17
RCMT10T3M0-FM4	WSM20S	10	●	029	6917264	10,17
RCMT10T3M0-FM4	WSM30S	10	●	029	6917265	10,17
RCMT10T3M0-FP4	WPP20G	10	●	029	8201086	10,46
RCMT10T3M0-FP4	WPP20S	10	●	029	6439431[2]	10,46
RCMT10T3M0-HU6	WPP10G	10	●	029	8205000	10,46
RCMT10T3M0-HU6	WPP10S	10	■	029	6415481[1]	10,46
RCMT10T3M0-HU6	WPP20G	10	●	029	8204999	10,46
RCMT10T3M0-HU6	WPP20S	10	■	029	6438748[1]	10,46
RCMT10T3M0-HU6	WPP30G	10	●	029	8205001	10,46
RCMT10T3M0-HU6	WPP30S	10	■	029	6438749[1]	10,46
RCMT10T3M0-RK4	WKK10S	10	●	029	6651101	10,17
RCMT10T3M0-RK4	WKK20S	10	●	029	6651102	10,17
RCMT10T3M0-RM4	WMP20S	10	●	029	6631241	10,17
RCMT10T3M0-RM4	WSM20S	10	●	029	6839121	10,17
RCMT10T3M0-RM4	WSM30S	10	●	029	6839122	10,17
RCMT10T3M0-RP4	WPP10G	10	●	029	8205004	10,46
RCMT10T3M0-RP4	WPP20G	10	●	029	8205002	10,46
RCMT10T3M0-RP4	WPP20S	10	■	029	6461382[1]	10,46
RCMT10T3M0-RP4	WPP30G	10	●	029	8205003	10,46
RCMT120400-RM4	WSM20S	10	●	029	6917304	12,28
RCMT120400-RP4	WPP20G	10	●	029	8205005	12,66
RCMT1204M0-FM4	WSM10S	10	●	029	6917266	12,28
RCMT1204M0-FM4	WSM20S	10	●	029	6917267	12,28
RCMT1204M0-FM4	WSM30S	10	●	029	6917268	12,28
RCMT1204M0-FP4	WPP10G	10	●	029	8205007	12,66
RCMT1204M0-FP4	WPP20G	10	●	029	8205006	12,66
RCMT1204M0-HU6	WPP10G	10	●	029	8205010	12,66
RCMT1204M0-HU6	WPP20G	10	●	029	8205008	12,66
RCMT1204M0-HU6	WPP30G	10	●	029	8205009	12,66
RCMT1204M0-RK4	WKK10S	10	●	029	6651103	12,28
RCMT1204M0-RK4	WKK20S	10	●	029	6651104	12,28
RCMT1204M0-RM4	WMP20S	10	●	029	6631242	12,28
RCMT1204M0-RM4	WSM20S	10	●	029	6839123	12,28
RCMT1204M0-RM4	WSM30S	10	●	029	6839124	12,28
RCMT1204M0-RP4	WPP10G	10	●	029	8205013	12,66
RCMT1204M0-RP4	WPP20G	10	●	029	8205011	12,66
RCMT1204M0-RP4	WPP20S	10	■	029	6461387[1]	12,66
RCMT1204M0-RP4	WPP30G	10	●	029	8205012	12,66
RCMT1605M0-RK4	WKK20S	10	●	029	6651105	22,47
RCMT1605M0-RP4	WPP10G	10	●	029	8205015	23,14
RCMT1605M0-RP4	WPP20G	10	●	029	8205016	23,14
RCMT1605M0-RP4	WPP30G	10	●	029	8205014	23,14
RCMT1606M0-HU6	WKK20S	10	●	029	6438759	22,47
RCMT1606M0-HU6	WPP10G	10	●	029	8205017	23,14
RCMT1606M0-HU6	WPP10S	10	■	029	6416354[1]	23,14

Bezeichnung / Designation	Sorte / Grade	VE / US		Disc. Gr.	Article No.	EURO Stück / piece
RCMT1606M0-HU6	WPP20G	10	●	029	8205018	23,14
RCMT1606M0-HU6	WPP30G	10	●	029	8205019	23,14
RCMT1606M0-RK4	WKK10S	10	●	029	6958563	22,47
RCMT1606M0-RK4	WKK20S	10	●	029	6651106	22,47
RCMT1606M0-RM4	WSM20S	10	●	029	6917305	22,47
RCMT1606M0-RM4	WSM30S	10	●	029	6917306	22,47
RCMT1606M0-RP4	WPP10G	10	●	029	8205020	23,14
RCMT1606M0-RP4	WPP20G	10	●	029	8205022	23,14
RCMT1606M0-RP4	WPP30G	10	●	029	8205021	23,14
RCMX120400-PR5	WPP20	10	■	029	5202024[1]	12,66
RCMX1204M0-PR5	WPP20G	10	●	029	8369458[1]	12,66
RCMX2006M0-HU6	WKK20S	10	●	029	6438945	32,70
RCMX2006M0-HU6	WPP10G	10	●	029	8205025	33,70
RCMX2006M0-HU6	WPP20G	10	●	029	8205023	33,70
RCMX2006M0-HU6	WPP20S	10	■	029	6438942[1]	33,70
RCMX2006M0-HU6	WPP30G	10	●	029	8205024	33,70
RCMX2006M0-HU6	WPP30S	10	●	029	6438944[2]	33,70
RCMX2507M0-HU6	WPP10G	5	●	029	8205028	54,70
RCMX2507M0-HU6	WPP20G	5	●	029	8205026	54,70
RCMX2507M0-HU6	WPP20S	5	■	029	6438960[1]	54,70
RCMX2507M0-HU6	WPP30G	5	●	029	8205027	54,70
RCMX3209M0-HU6	WPP10G	5	●	029	8205029	101,00
RCMX3209M0-HU6	WPP20G	5	●	029	8205030	101,00
RCMX3209M0-HU6	WPP30G	5	●	029	8205031	101,00
RDGT0803M0-G88	WK10	10	●	009	5004971	11,07
RDGT0803M0-G88	WXN15	10	●	009	5021817	13,89
RDGT10T3M0-G88	WK10	10	●	009	5004973	11,79
RDGT10T3M0-G88	WXN15	10	●	009	5021818	14,83
RDGT1204M0-G85	WMG40	10	●	009	5004976	14,70
RDGT1204M0-G88	WK10	10	●	009	5004975	14,70
RDGT1204M0-G88	WXN15	10	●	009	5021819	18,44
RDGT1605M0-G88	WK10	10	●	009	5004908	17,51
RDGT1605M0-G88	WXN15	10	●	009	5022023	21,90
RDGT2006M0-G85	WMG40	10	●	009	5004980	23,98
RDGT2006M0-G88	WK10	10	●	009	5004979	23,98
RDGT2006M0-G88	WXN15	10	●	009	5021821	30,00
RDGX0501M0-G88	WK10	10	●	009	7924020	8,76
RDGX07T1M0-G88	WK10	10	●	009	7924021	10,34
RDGX1003M0-G88	WK10	10	●	009	7924022	10,81
RDGX12T3M0-G88	WK10	10	●	009	7924023	13,42
RDGX1604M0-G88	WK10	10	●	009	7924024	15,87
RDGX2006M0-G88	WK10	10	●	009	7924025	21,40
RDHW0803M0-A57	WHH15X	10	●	009	8159201	14,57
RDHW10T3M0-A57	WHH15X	10	●	009	8159202	15,26
RDHW10T3M0T-A27	WKP35S	10	●	009	5917966[3]	13,86
RDHW1204M0-A57	WHH15X	10	●	009	8159203	18,92
RDHW1204M0T-A27	WKP25S	10	●	009	6071236	17,20
RDHW1204M0T-A27	WKP35S	10	●	009	5917967[3]	17,20
RDHW1605M0-A57	WHH15X	10	●	009	8159204	22,39
RDHW1605M0T-A27	WKP35S	10	●	009	5917969[3]	20,35
RDHW2006M0-A57	WHH15X	10	●	009	8159205	30,20
RDHW2006M0T-A27	WKP25S	10	●	009	6071386	27,40
RDHX0501M0-A57	WHH15X	10	●	009	7960050	12,34
RDHX0501M0-A57	WKK25G	10	●	009	8284912	11,76
RDHX0501M0-A57	WKK25S	10	■	009	7988265[1]	11,76
RDHX0501M0-A57	WKP25S	10	●	009	7028046	11,22
RDHX0501M0-A57	WKP35G	10	●	009	7924027	13,46
RDHX0501M0-A57	WKP35S	10	●	009	7924026	11,22
RDHX0702M0-A57	WHH15X	10	●	009	7960052	14,57
RDHX07T1M0-A57	WHH15X	10	●	009	7960051	14,57
RDHX07T1M0-A57	WKK25G	10	●	009	8284914	13,91
RDHX07T1M0-A57	WKK25S	10	■	009	7988345[1]	13,91
RDHX07T1M0-A57	WKP25S	10	●	009	7988344	13,25
RDHX07T1M0-A57	WKP35G	10	●	009	7924029	15,92
RDHX07T1M0-A57	WKP35S	10	●	009	7924028	13,25
RDHX1003M0-A57	WHH15X	10	●	009	7960053	15,27
RDHX1003M0-A57	WKP35G	10	●	009	7924031	16,65
RDHX1003M0-A57	WKP35S	10	●	009	7924030	13,86
RDHX1003M0T-A27	WKP25S	10	●	009	6071389	13,86
RDHX1003M0T-A27	WKP35S	10	●	009	5918023	13,86

Bezeichnung / Designation	Sorte / Grade	VE / US		Disc. Gr.	Article No.	EURO Stück / piece
RDHX12T3M0-A57	WHH15X	10	●	009	7960055	18,93
RDHX12T3M0-A57	WKP35G	10	●	009	7924033	20,65
RDHX12T3M0-A57	WKP35S	10	●	009	7924032	17,20
RDHX12T3M0T-A27	WKP25S	10	●	009	6071450	17,20
RDHX12T3M0T-A27	WKP35G	10	●	009	7347344	20,65
RDHX12T3M0T-A27	WKP35S	10	●	009	5918024	17,20
RDHX1604M0-A57	WHH15X	10	●	009	7960054	22,40
RDHX1604M0-A57	WKP35G	10	●	009	7924035	24,42
RDHX1604M0-A57	WKP35S	10	●	009	7924034	20,35
RDHX1604M0T-A27	WKP25S	10	●	009	6071451	20,35
RDHX2006M0-A57	WHH15X	10	●	009	7960056	30,20
RDHX2006M0-A57	WKP35G	10	●	009	7924037	32,90
RDHX2006M0-A57	WKP35S	10	●	009	7924036	27,40
RDHX2006M0T-A27	WKP35S	10	●	009	5918026	27,40
RDMT0803M0-D57	WKP35S	10	●	009	5918028	10,76
RDMT0803M0-D57	WSM35G	10	●	009	8285037	11,30
RDMT0803M0-D57	WSM35S	10	●	009	6161449	11,30
RDMT0803M0-D57	WSP45G	10	●	009	7924267	11,29
RDMT10T3M0-D57	WKP25S	10	●	009	6071158	11,29
RDMT10T3M0-D57	WKP35G	10	●	009	7347348	13,55
RDMT10T3M0-D57	WKP35S	10	●	009	5918029	11,29
RDMT10T3M0-D57	WSM35G	10	●	009	8285038	11,86
RDMT10T3M0-D57	WSM35S	10	●	009	6161452	11,86
RDMT10T3M0-D57	WSP45G	10	●	009	7924268	11,87
RDMT1204M0-D57	WKP25S	10	●	009	6071190	13,47
RDMT1204M0-D57	WKP35G	10	●	009	7347349	16,16
RDMT1204M0-D57	WKP35S	10	●	009	5918050	13,47
RDMT1204M0-D57	WSM35G	10	●	009	8285039	14,14
RDMT1204M0-D57	WSM35S	10	●	009	6161455	14,14
RDMT1204M0-D57	WSP45G	10	●	009	7924269	14,16
RDMT1605M0-D57	WKP25S	10	●	009	6071193	18,10
RDMT1605M0-D57	WKP35G	10	●	009	7347351	21,73
RDMT1605M0-D57	WKP35S	10	●	009	5918052	18,10
RDMT1605M0-D57	WSM35G	10	●	009	8285040	19,01
RDMT1605M0-D57	WSM35S	10	●	009	6161471	19,01
RDMT1605M0-D57	WSP45G	10	●	009	7924270	19,01
RDMT2006M0-D57	WKP25S	10	●	009	6071194	22,84
RDMT2006M0-D57	WKP35G	10	●	009	7347352	27,40
RDMT2006M0-D57	WKP35S	10	●	009	5918053	22,84
RDMT2006M0-D57	WSM35G	10	●	009	8285041	23,99
RDMT2006M0-D57	WSM35S	10	●	009	6161472	23,99
RDMT2006M0-D57	WSP45G	10	●	009	7924271	23,99
RDMW0803M0T-A27	WKP35S	10	●	009	5918054	9,78
RDMW10T3M0T-A27	WKP25S	10	●	009	6071198	9,78
RDMW10T3M0T-A27	WKP35S	10	●	009	5918055	9,78
RDMW1204M0T-A27	WKP25S	10	●	009	6071199	11,42
RDMW1204M0T-A27	WKP35S	10	●	009	5918056	11,42
RDMW1605M0T-A27	WKP25S	10	●	009	6071200	17,02
RDMW1605M0T-A27	WKP35G	10	●	009	7347356	20,43
RDMW1605M0T-A27	WKP35S	10	●	009	5918057	17,02
RDMW2006M0T-A27	WKP25S	10	●	009	6071201	20,70
RDMW2006M0T-A27	WKP35G	10	●	009	7347357	24,86
RDMW2006M0T-A27	WKP35S	10	●	009	5918058	20,70
RDMX0501M0-D57	WKK25G	10	●	009	8284913	7,84
RDMX0501M0-D57	WKK25S	10	■	009	7988267[1]	7,84
RDMX0501M0-D57	WKP25S	10	●	009	7988266	7,48
RDMX0501M0-D57	WKP35G	10	●	009	7924038	8,98
RDMX0501M0-D57	WKP35S	10	●	009	7924039	7,49
RDMX0501M0-D57	WSM35G	10	●	009	8441374	7,84
RDMX0501M0-D57	WSM35S	10	●	009	7988268	7,84
RDMX0501M0-D57	WSP45G	10	●	009	7924040	7,86
RDMX07T1M0-D57	WKK25G	10	●	009	8284915	9,12
RDMX07T1M0-D57	WKK25S	10	■	009	7988347[1]	9,12
RDMX07T1M0-D57	WKP25S	10	●	009	7988346	8,67
RDMX07T1M0-D57	WKP35G	10	●	009	7924041	10,37
RDMX07T1M0-D57	WKP35S	10	●	009	7924042	8,63
RDMX07T1M0-D57	WSM35G	10	●	009	8441386	9,11
RDMX07T1M0-D57	WSM35S	10	●	009	7988348	9,11
RDMX07T1M0-D57	WSP45G	10	●	009	7924043	9,07
RDMX1003M0-D57	WKP35G	10	●	009	7924044	11,72

Bezeichnung / Designation	Sorte / Grade	VE / US		Disc. Gr.	Article No.	EURO Stück / piece
RDMX1003M0-D57	WKP35S	10	●	009	7924045	9,78
RDMX1003M0-D57	WSP45G	10	●	009	7924046	10,28
RDMX1003M0T-A27	WKP25S	10	●	009	6071203	9,78
RDMX1003M0T-A27	WKP35G	10	●	009	7347359	11,72
RDMX1003M0T-A27	WKP35S	10	●	009	5918070	9,78
RDMX12T3M0-D57	WKP35G	10	●	009	7924047	13,69
RDMX12T3M0-D57	WKP35S	10	●	009	7924048	11,42
RDMX12T3M0-D57	WSP45G	10	●	009	7924049	12,00
RDMX12T3M0T-A27	WKP25S	10	●	009	6071204	11,42
RDMX12T3M0T-A27	WKP35G	10	●	009	7347362	13,69
RDMX12T3M0T-A27	WKP35S	10	●	009	5918071	11,42
RDMX1604M0-D57	WKP35G	10	●	009	7924050	20,43
RDMX1604M0-D57	WKP35S	10	●	009	7924051	17,02
RDMX1604M0-D57	WSP45G	10	●	009	7924052	17,88
RDMX1604M0T-A27	WKP25S	10	●	009	6071205	17,02
RDMX1604M0T-A27	WKP35G	10	●	009	7347364	20,43
RDMX1604M0T-A27	WKP35S	10	●	009	5918073	17,02
RDMX2006M0-D57	WKP35G	10	●	009	7924053	24,86
RDMX2006M0-D57	WKP35S	10	●	009	7924054	20,70
RDMX2006M0-D57	WSP45G	10	●	009	7924055	21,74
RECYCLING KOMPLETTBOX M		1	●	095	6212292	25,20
RECYCLING KOMPLETTBOX S		1	●	095	6257287	20,41
RECYCLING KOMPLETTBOX XL		1	●	095	6212293	36,60
RNGN120400TM-S	WBK30	2	●	023	7823847	188,00
RNGN120400TS-0	WBK20	2	●	023	7823846	188,00
RNGN120700E	WIS10	10	●	024	6188175	22,11
RNGN120700E	WIS30	10	●	024	8377375	22,11
RNGN120700E	WWS20	10	●	024	6189031	39,40
RNGN120700T01020	WIS10	10	●	024	6188172	22,11
RNGN120700T01020	WIS30	10	●	024	8377376	22,11
RNGN120700T01020	WWS20	10	●	024	6189030	39,40
RNGN150700T01020	WWS20	10	●	024	6189032	53,40
RNMA120400-RK5	WKK20S	10	●	027	7469020	14,27
RNMG120400-RP5	WPP20G	10	●	027	8116169	14,70
RNMG120400-RP5	WS10	10	●	027	7469021	10,72
RNMX1005M0-G57	WSM35G	10	●	009	8285042	18,33
RNMX1005M0-G57	WSM35S	10	●	009	7807048	18,33
RNMX1005M0-G57	WSP45G	10	●	009	8201926	18,35
RNMX1005M0-G57	WSP45S	10	■	009	7807047*	18,35
RNMX1005M0-K67	WSM35G	10	●	009	8441372	18,35
RNMX1005M0-K67	WSM35S	10	●	009	7807090	18,35
RNMX1005M0-K67	WSP45G	10	●	009	8201927	18,35
RNMX1005M0-K67	WSP45S	10	■	009	7807049*	18,35
RNMX1206M0-G57	WSM35G	10	●	009	8441399	22,01
RNMX1206M0-G57	WSM35S	10	●	009	7807091	22,01
RNMX1206M0-G57	WSP45G	10	●	009	8201928	22,02
RNMX1206M0-G57	WSP45S	10	■	009	7037590*	22,02
RNMX1206M0-K67	WSM35G	10	●	009	8441389	22,01
RNMX1206M0-K67	WSM35S	10	●	009	7807092	22,01
RNMX1206M0-K67	WSP45G	10	●	009	8201929	22,02
RNMX1206M0-K67	WSP45S	10	■	009	7037547*	22,02
ROGX0803M04-G88	WK10	10	●	009	7988416	9,63
ROGX0803M04-G88	WXN15	10	●	009	8230819	12,04
ROGX10T3M08-G88	WK10	10	●	009	7936312	11,52
ROGX10T3M08-G88	WXN15	10	●	009	8230890	14,41
ROGX1204M08-G88	WK10	10	●	009	7985310	13,86
ROGX1204M08-G88	WXN15	10	●	009	8230891	17,33
ROGX1605M08-G88	WK10	10	●	009	7988531	18,68
ROGX1605M08-G88	WXN15	10	●	009	8230892	23,35
ROGX2006M08-G88	WK10	10	●	009	7988563	24,89
ROGX2006M08-G88	WXN15	10	●	009	8230893	31,10
ROHX0803M0-D57	WSM35G	10	●	009	8285043	12,62
ROHX0803M0-D67	WSM35G	10	●	009	8441368	12,63
ROHX0803M0-D67	WSM35S	10	●	009	7058547	12,63
ROHX0803M04-A57	WHH15X	10	●	009	7988349	13,23
ROHX0803M04-A57	WKK25G	10	●	009	8284902	12,62
ROHX0803M04-A57	WKK25S	10	■	009	7988413*	12,62
ROHX0803M04-A57	WKP25S	10	●	009	7988410	12,03
ROHX0803M04-A57	WKP35G	10	●	009	7988411	14,42
ROHX0803M04-A57	WKP35S	10	●	009	7988412	12,03

Bezeichnung / Designation	Sorte / Grade	VE / US		Disc. Gr.	Article No.	EURO Stück / piece
ROHX0803M04-D57	WKP35S	10	●	009	8132873	12,03
ROHX0803M04-D57	WSM35G	10	●	009	8441375	12,63
ROHX0803M04-D57	WSM35S	10	●	009	8132874	12,63
ROHX0803M04-D57	WSP45G	10	●	009	8132875	12,65
ROHX0803M04-D67	WSP45G	10	●	009	8132876	12,65
ROHX10T3M0-D57	WKP35G	10	●	009	7347369	17,30
ROHX10T3M0-D57	WKP35S	10	●	009	5888008	14,41
ROHX10T3M0-D57	WSM35G	10	●	009	8285044	15,13
ROHX10T3M0-D57	WSM35S	10	■	009	6161474*	15,13
ROHX10T3M0-D57	WSP45G	10	●	009	7924274	15,14
ROHX10T3M0-D67	WKP35G	10	●	009	7347370	17,30
ROHX10T3M0-D67	WSM35G	10	●	009	8441391	15,13
ROHX10T3M0-D67	WSM35S	10	●	009	7058548	15,13
ROHX10T3M0-D67	WSP45G	10	●	009	7924275	15,14
ROHX10T3M0-F67	W3536	10	●	009	6111174	18,31
ROHX10T3M0-F67	WMP45G	10	■	009	7508635*	19,07
ROHX10T3M0-F67	WSM35G	10	●	009	8441392	15,13
ROHX10T3M0-F67	WSM35S	10	●	009	7058549	15,13
ROHX10T3M0-F67	WSP45G	10	●	009	7924276	15,14
ROHX10T3M08-A57	WHH15X	10	●	009	7936264	15,84
ROHX10T3M08-A57	WKK25G	10	●	009	8284904	15,13
ROHX10T3M08-A57	WKK25S	10	■	009	7936268*	15,13
ROHX10T3M08-A57	WKP25S	10	●	009	7936267	14,41
ROHX10T3M08-A57	WKP35G	10	●	009	7936265	17,30
ROHX10T3M08-A57	WKP35S	10	●	009	7936266	14,41
ROHX10T3M0T-A27	WKP35S	10	●	009	5888002	14,41
ROHX1204M0-D57	W3536	10	●	009	6111190	22,00
ROHX1204M0-D57	WKP35G	10	●	009	7347375	20,79
ROHX1204M0-D57	WKP35S	10	●	009	5888009	17,32
ROHX1204M0-D57	WSM35G	10	●	009	8285045	18,19
ROHX1204M0-D57	WSM35S	10	■	009	6161527*	18,19
ROHX1204M0-D57	WSP45G	10	●	009	7924277	18,20
ROHX1204M0-D67	W3536	10	●	009	6111194	22,00
ROHX1204M0-D67	WKP35G	10	●	009	7347379	20,79
ROHX1204M0-D67	WKP35S	10	●	009	5888060	17,32
ROHX1204M0-D67	WSM35G	10	●	009	8285046	18,19
ROHX1204M0-D67	WSM35S	10	■	009	7058550*	18,19
ROHX1204M0-D67	WSP45G	10	●	009	7924278	18,20
ROHX1204M0-F67	W3536	10	●	009	5957406	22,00
ROHX1204M0-F67	WKP35G	10	●	009	7347380	20,79
ROHX1204M0-F67	WMP45G	10	■	009	7508637*	22,93
ROHX1204M0-F67	WSM35G	10	●	009	8285047	18,19
ROHX1204M0-F67	WSM35S	10	■	009	7058551*	18,19
ROHX1204M0-F67	WSP45G	10	●	009	7924279	18,20
ROHX1204M08-A57	WHH15X	10	●	009	7985263	19,06
ROHX1204M08-A57	WKK25G	10	●	009	8284906	18,19
ROHX1204M08-A57	WKK25S	10	■	009	7985267*	18,19
ROHX1204M08-A57	WKP25S	10	●	009	7985266	17,32
ROHX1204M08-A57	WKP35G	10	●	009	7985264	20,79
ROHX1204M08-A57	WKP35S	10	●	009	7985265	17,32
ROHX1204M0T-A27	WKP35G	10	●	009	7347381	20,79
ROHX1204M0T-A27	WKP35S	10	●	009	5888004	17,32
ROHX1605M0-D57	WKP35S	10	●	009	5888050	23,34
ROHX1605M0-D57	WSP45G	10	●	009	7924280	24,54
ROHX1605M0-D67	WSP45G	10	●	009	7924281	24,54
ROHX1605M08-A57	WHH15X	10	●	009	7988514	25,70
ROHX1605M08-A57	WKK25G	10	●	009	8284908	24,50
ROHX1605M08-A57	WKK25S	10	■	009	7988518*	24,50
ROHX1605M08-A57	WKP25S	10	●	009	7988517	23,34
ROHX1605M08-A57	WKP35G	10	●	009	7988516	28,00
ROHX1605M08-A57	WKP35S	10	●	009	7988515	23,34
ROHX1605M0T-A27	WKP35G	10	●	009	7347389	28,00
ROHX1605M0T-A27	WKP35S	10	●	009	5888005	23,34
ROHX2006M0-D57	WSP45G	10	●	009	8201930	33,10
ROHX2006M0-D57	WSP45S	10	■	009	6427978*	33,10
ROHX2006M08-A57	WHH15X	10	●	009	7988532	34,60
ROHX2006M08-A57	WKK25G	10	●	009	8284910	33,10
ROHX2006M08-A57	WKK25S	10	■	009	7988536*	33,10
ROHX2006M08-A57	WKP25S	10	●	009	7988535	31,50
ROHX2006M08-A57	WKP35G	10	●	009	7988534	37,80

Bezeichnung / Designation	Sorte / Grade	VE / US		Disc. Gr.	Article No.	EURO Stück / piece
ROHX2006M08-A57	WKP35S	10	●	009	7988533	31,50
ROHX2006M08-D57	WKP35S	10	●	009	8132940	31,50
ROHX2006M0T8-A27	WKP35S	10	●	009	8132941	31,50
ROMX0803M0-D57	WSM35G	10	●	009	8285048	9,55
ROMX0803M04-D57	WKK25G	10	●	009	8284903	9,55
ROMX0803M04-D57	WKK25S	10	■	009	7988415*	9,55
ROMX0803M04-D57	WKP25S	10	●	009	7988414	9,10
ROMX0803M04-D57	WKP35S	10	●	009	8132877	9,10
ROMX0803M04-D57	WSM35G	10	●	009	8441382	9,55
ROMX0803M04-D57	WSM35S	10	●	009	8132878	9,55
ROMX0803M04-D57	WSP45G	10	●	009	8132879	9,56
ROMX10T3M0-D57	W3536	10	●	009	6261325	13,90
ROMX10T3M0-D57	WKP35G	10	●	009	7347393	13,14
ROMX10T3M0-D57	WKP35S	10	●	009	5888054	10,95
ROMX10T3M0-D57	WMP45G	10	●	009	8182158	14,46
ROMX10T3M0-D57	WSM35G	10	●	009	8285051	11,49
ROMX10T3M0-D57	WSM35S	10	■	009	6161549*	11,49
ROMX10T3M0-D57	WSM45X	10	●	009	6841389	13,90
ROMX10T3M0-D57	WSP45G	10	●	009	7924283	11,49
ROMX10T3M0-D67	WSM35G	10	●	009	8285052	11,49
ROMX10T3M0-D67	WSM35S	10	■	009	6949984*	11,49
ROMX10T3M0-D67	WSM45X	10	●	009	6949985	13,90
ROMX10T3M0-D67	WSP45G	10	●	009	8112895	11,49
ROMX10T3M0-F67	WMP45G	10	●	009	8182159	14,46
ROMX10T3M0-F67	WSM45X	10	●	009	6841391	13,90
ROMX10T3M0-F67	WSP45G	10	●	009	8112896	11,49
ROMX10T3M08-D57	WKK25G	10	●	009	8284905	11,49
ROMX10T3M08-D57	WKK25S	10	■	009	7936306*	11,49
ROMX10T3M08-D57	WKP25S	10	●	009	7936303	10,95
ROMX10T3M08-D57	WKP35G	10	●	009	7936305	13,14
ROMX10T3M08-D57	WKP35S	10	●	009	7936304	10,95
ROMX10T3M08-D57	WSM35G	10	●	009	8285049	11,49
ROMX10T3M08-D57	WSM35S	10	■	009	7936308*	11,49
ROMX10T3M08-D57	WSP45G	10	●	009	7936307	11,49
ROMX10T3M08-F67	WSM35G	10	●	009	8285050	11,49
ROMX10T3M08-F67	WSM35S	10	■	009	7936310*	11,49
ROMX10T3M08-F67	WSM45X	10	●	009	8127339	13,90
ROMX10T3M08-F67	WSP45G	10	●	009	7936309	11,49
ROMX10T3M0T8-A27	WKK25G	10	●	009	8284878	11,49
ROMX10T3M0T8-A27	WKK25S	10	■	009	7936301*	11,49
ROMX10T3M0T8-A27	WKP25S	10	●	009	7936302	10,95
ROMX10T3M0T8-A27	WKP35G	10	●	009	7936269	13,14
ROMX10T3M0T8-A27	WKP35S	10	●	009	7936300	10,95
ROMX1204M0-D57	W3536	10	●	009	6176506	16,64
ROMX1204M0-D57	WKP35G	10	●	009	7347394	15,72
ROMX1204M0-D57	WKP35S	10	●	009	5888055	13,10
ROMX1204M0-D57	WMP45G	10	●	009	8182190	17,37
ROMX1204M0-D57	WSM35G	10	●	009	8285055	13,76
ROMX1204M0-D57	WSM35S	10	■	009	6161550*	13,76
ROMX1204M0-D57	WSM45X	10	●	009	6841390	16,64
ROMX1204M0-D57	WSP45G	10	●	009	7924284	13,76
ROMX1204M0-D67	WMP45G	10	●	009	8182192	17,37
ROMX1204M0-D67	WSM45X	10	●	009	6949988	16,64
ROMX1204M0-D67	WSP45G	10	●	009	8112897	13,76
ROMX1204M0-F67	WMP45G	10	●	009	8182191	17,37
ROMX1204M0-F67	WSM45X	10	●	009	6841392	16,64
ROMX1204M0-F67	WSP45G	10	●	009	8112898	13,76
ROMX1204M08-D57	WKK25G	10	●	009	8284907	13,76
ROMX1204M08-D57	WKK25S	10	■	009	7985305*	13,76
ROMX1204M08-D57	WKP25S	10	●	009	7985302	13,10
ROMX1204M08-D57	WKP35G	10	●	009	7985304	15,72
ROMX1204M08-D57	WKP35S	10	●	009	7985303	13,10
ROMX1204M08-D57	WSM35G	10	●	009	8285053	13,76
ROMX1204M08-D57	WSM35S	10	■	009	7985307*	13,76
ROMX1204M08-D57	WSP45G	10	●	009	7985306	13,76
ROMX1204M08-F67	WSM35G	10	●	009	8285054	13,76
ROMX1204M08-F67	WSM35S	10	■	009	7985309*	13,76
ROMX1204M08-F67	WSM45X	10	●	009	8127370	16,64
ROMX1204M08-F67	WSP45G	10	●	009	7985308	13,76
ROMX1204M0T8-A27	WKK25G	10	●	009	8284869	13,76

Bezeichnung / Designation	Sorte / Grade	VE / US		Disc. Gr.	Article No.	EURO Stück / piece
ROMX1204M0T8-A27	WKK25S	10	■	009	7985300*	13,76
ROMX1204M0T8-A27	WKP25S	10	●	009	7985301	13,10
ROMX1204M0T8-A27	WKP35G	10	●	009	7985268	15,72
ROMX1204M0T8-A27	WKP35S	10	●	009	7985269	13,10
ROMX1605M0-D57	WKP35G	10	●	009	7347395	21,23
ROMX1605M0-D57	WKP35S	10	●	009	5888056	17,71
ROMX1605M0-D57	WSM35G	10	●	009	8285058	18,59
ROMX1605M0-D57	WSM35S	10	■	009	6161551*	18,59
ROMX1605M0-D57	WSP45G	10	●	009	7924285	18,58
ROMX1605M08-D57	WKK25G	10	●	009	8284909	18,59
ROMX1605M08-D57	WKK25S	10	■	009	7988526*	18,59
ROMX1605M08-D57	WKP25S	10	●	009	7988523	17,71
ROMX1605M08-D57	WKP35G	10	●	009	7988525	21,23
ROMX1605M08-D57	WKP35S	10	●	009	7988524	17,71
ROMX1605M08-D57	WSM35G	10	●	009	8285056	18,59
ROMX1605M08-D57	WSM35S	10	■	009	7988528*	18,59
ROMX1605M08-D57	WSP45G	10	●	009	7988527	18,58
ROMX1605M08-F67	WSM35G	10	●	009	8285057	18,59
ROMX1605M08-F67	WSM35S	10	■	009	7988530*	18,59
ROMX1605M08-F67	WSM45X	10	●	009	8127371	22,49
ROMX1605M08-F67	WSP45G	10	●	009	7988529	18,58
ROMX1605M0T8-A27	WKK25G	10	●	009	8284871	18,59
ROMX1605M0T8-A27	WKK25S	10	■	009	7988519*	18,59
ROMX1605M0T8-A27	WKP25S	10	●	009	7988520	17,71
ROMX1605M0T8-A27	WKP35G	10	●	009	7988522	21,23
ROMX1605M0T8-A27	WKP35S	10	●	009	7988521	17,71
ROMX2006M0-D57	WSM35G	10	●	009	8285059	25,10
ROMX2006M08-D57	WKK25G	10	●	009	8284911	25,10
ROMX2006M08-D57	WKK25S	10	■	009	7988562*	25,10
ROMX2006M08-D57	WKP25S	10	●	009	7988561	23,92
ROMX2006M08-D57	WKP35G	10	●	009	8132942	28,70
ROMX2006M08-D57	WKP35S	10	●	009	8132943	23,92
ROMX2006M08-D57	WSM35G	10	●	009	8441381	25,10
ROMX2006M08-D57	WSM35S	10	●	009	8132944	25,10
ROMX2006M08-D57	WSP45G	10	●	009	8132945	25,10
ROMX2006M0T8-A27	WKK25G	10	●	009	8284856	25,10
ROMX2006M0T8-A27	WKP25S	10	●	009	7988537	23,92
ROMX2006M0T8-A27	WKP35G	10	●	009	7988539	28,70
ROMX2006M0T8-A27	WKP35S	10	●	009	7988538	23,92
ROMX250700-G77	WSP45G	5	●	009	8201931	47,80
ROMX250700-G77	WSP45S	5	■	009	7057779*	47,80
RPGN090300E	WIS10	10	●	024	7945310	18,48
RPGN090300E	WIS30	10	●	024	8377377	18,48
RPGN090300T01020	WIS10	10	●	024	6590064	18,48
RPGN090300T01020	WIS30	10	●	024	8377378	18,48
RPGN120400E	WIS10	10	●	024	7945311	19,85
RPGN120400E	WIS30	10	●	024	8377379	19,85
RPGN120400T01020	WIS10	10	●	024	6590063	19,85
RPGN120400T01020	WIS30	10	●	024	8377380	19,85
RPNT1204M0	WTL71	10	●	009	5005027	17,97
RS101		1	●	095	5008475	1,79
RS102		1	●	095	5008476	3,21
RS103		1	●	095	5008477	2,19
RS104		1	●	095	5008478	3,21
RS105		1	●	095	5008479	2,19
RS106		1	●	095	5008486	16,30
RS107		1	●	095	5008487	26,90
RS108		1	●	095	5008507	3,68
RS113		1	●	095	5006908	8,33
RS114		1	●	095	5006909	8,33
RS115		1	●	095	5006910	8,33
RS116		1	●	095	5042165	1,79
RS117		1	●	095	5042164	1,79
RS118		1	●	095	5837653	3,68
RS120		1	●	095	5871661	1,79
RS121		1	●	095	6385549	3,88
RS122		1	●	095	6385820	4,25
RS123		1	●	095	7968103	3,32
RS124		1	●	095	7968104	4,65
S16M-NTS-IL16-20		1	●	060	5011600	144,00

Bezeichnung / Designation	Sorte / Grade	VE / US		Disc. Gr.	Article No.	EURO Stück / piece
S16M-NTS-IR16-20		1	●	060	5011601	144,00
S2021302-M2	THL	1	●	TH4	5101655	51,90
S2021302-M2.5	THL	1	●	TH4	5101656	51,10
S2021302-M3	THL	1	●	TH4	5101657	39,70
S2021302-M4	THL	1	●	TH4	5101658	42,00
S2021302-M5	THL	1	●	TH4	5101659	43,50
S2021302-M6	THL	1	●	TH4	5101660	55,00
S2021302-M8	THL	1	●	TH4	5101661	64,10
S2021302-M10	THL	1	●	TH4	5101662	79,30
S2021305-M2	TIN	1	●	TH4	5101663	49,10
S2021305-M2.5	TIN	1	●	TH4	5101664	48,40
S2021305-M3	TIN	1	●	TH4	5101665	36,90
S2021305-M4	TIN	1	●	TH4	5101666	39,10
S2021305-M5	TIN	1	●	TH4	5101667	40,60
S2021305-M6	TIN	1	●	TH4	5101668	49,10
S2021305-M8	TIN	1	●	TH4	5101669	59,20
S2021305-M10	TIN	1	●	TH4	5101670	71,10
S2026302-M12	THL	1	●	TH4	5101682	97,60
S2026302-M14	THL	1	●	TH4	5101681	121,00
S2026302-M16	THL	1	●	TH4	5101680	134,00
S2026302-M20	THL	1	●	TH4	5101679	226,00
S2026302-M24	THL	1	●	TH4	5101678	275,00
S2026305-M12	TIN	1	●	TH4	5101677	90,20
S2026305-M14	TIN	1	●	TH4	5101676	113,00
S2026305-M16	TIN	1	●	TH4	5101675	119,00
S2026305-M20	TIN	1	●	TH4	5101674	211,00
S2026305-M24	TIN	1	●	TH4	5101673	247,00
S2051302-M2	THL	1	●	TH4	5101672	56,40
S2051302-M2.5	THL	1	●	TH4	5101671	55,00
S2051302-M3	THL	1	●	TH4	5101683	45,80
S2051302-M4	THL	1	●	TH4	5101695	48,10
S2051302-M5	THL	1	●	TH4	5101694	47,30
S2051302-M6	THL	1	●	TH4	5101693	60,30
S2051302-M8	THL	1	●	TH4	5101692	70,20
S2051302-M10	THL	1	●	TH4	5101691	86,90
S2051305-M2	TIN/VAP	1	●	TH4	5101690	56,40
S2051305-M2.5	TIN/VAP	1	●	TH4	5101689	55,00
S2051305-M3	TIN/VAP	1	●	TH4	5101688	45,80
S2051305-M4	TIN/VAP	1	●	TH4	5101687	48,10
S2051305-M5	TIN/VAP	1	●	TH4	5101686	47,30
S2051305-M6	TIN/VAP	1	●	TH4	5101685	60,30
S2051305-M8	TIN/VAP	1	●	TH4	5101684	70,20
S2051305-M10	TIN/VAP	1	●	TH4	5101707	86,90
S2051312-M5	THL	1	●	TH5	5101706	66,30
S2051312-M6	THL	1	●	TH5	5101705	79,30
S2051312-M8	THL	1	●	TH5	5101704	96,10
S2051312-M10	THL	1	●	TH5	5101703	107,00
S2051315-M5	TIN/VAP	1	●	TH5	5101702	66,30
S2051315-M6	TIN/VAP	1	●	TH5	5101701	79,30
S2051315-M8	TIN/VAP	1	●	TH5	5101700	96,10
S2051315-M10	TIN/VAP	1	●	TH5	5101699	107,00
S20516-M3		1	●	TH4	5075364	38,60
S20516-M4		1	●	TH4	5075365	38,60
S20516-M5		1	●	TH4	5075366	39,50
S20516-M6		1	●	TH4	5075367	42,10
S20516-M8		1	●	TH4	5075368	49,60
S20516-M10		1	●	TH4	5075369	57,20
S2051604-M4	CRN	1	●	TH4	5075371	47,10
S2051604-M5	CRN	1	●	TH4	5075372	47,90
S2051604-M6	CRN	1	●	TH4	5075373	57,40
S2051604-M8	CRN	1	●	TH4	5075374	70,70
S2051604-M10	CRN	1	●	TH4	5075375	80,10
S2056302-M12	THL	1	●	TH4	5101698	104,00
S2056302-M14	THL	1	●	TH4	5101697	124,00
S2056302-M16	THL	1	●	TH4	5101696	142,00
S2056302-M20	THL	1	●	TH4	5101719	232,00
S2056302-M24	THL	1	●	TH4	5101718	282,00
S2056305-M12	TIN/VAP	1	●	TH4	5101717	104,00
S2056305-M14	TIN/VAP	1	●	TH4	5101716	124,00
S2056305-M16	TIN/VAP	1	●	TH4	5101715	142,00

Bezeichnung / Designation	Sorte / Grade	VE / US		Disc. Gr.	Article No.	EURO Stück / piece
S2056305-M20	TIN/VAP	1	●	TH4	5101714	232,00
S2056305-M24	TIN/VAP	1	●	TH4	5101713	282,00
S2056312-M12	THL	1	●	TH5	5101712	119,00
S2056312-M14	THL	1	●	TH5	5101711	143,00
S2056312-M16	THL	1	●	TH5	5101710	146,00
S2056312-M20	THL	1	●	TH5	5101709	235,00
S2056315-M12	TIN/VAP	1	●	TH5	5101708	119,00
S2056315-M14	TIN/VAP	1	●	TH5	5101731	143,00
S2056315-M16	TIN/VAP	1	●	TH5	5101730	146,00
S2056315-M20	TIN/VAP	1	●	TH5	5101729	235,00
S2061305-M3	TIN	1	●	TH7	5101728	78,30
S2061305-M4	TIN	1	●	TH7	5101727	82,90
S2061305-M5	TIN	1	●	TH7	5101726	84,60
S2061305-M6	TIN	1	●	TH7	5101725	92,20
S2061305-M8	TIN	1	●	TH7	5101724	111,00
S2061305-M10	TIN	1	●	TH7	5101723	132,00
S2061306-M3	TICN	1	●	TH7	5101722	81,40
S2061306-M4	TICN	1	●	TH7	5101721	84,60
S2061306-M5	TICN	1	●	TH7	5101720	86,00
S2061306-M6	TICN	1	●	TH7	5101743	99,90
S2061306-M8	TICN	1	●	TH7	5101742	117,00
S2061306-M10	TICN	1	●	TH7	5101741	141,00
S2061345-M4	TIN	1	●	TH7	5101740	119,00
S2061345-M5	TIN	1	●	TH7	5101739	122,00
S2061345-M6	TIN	1	●	TH7	5101738	130,00
S2061345-M8	TIN	1	●	TH7	5101737	155,00
S2061345-M10	TIN	1	●	TH7	5101736	186,00
S2066305-M12	TIN	1	●	TH7	5101735	144,00
S2066306-M12	TICN	1	●	TH7	5101734	152,00
S2066345-M12	TIN	1	●	TH7	5101733	217,00
S20Q-NTS-IL16-17		1	●	060	5011602	164,00
S20Q-NTS-IL16-20		1	●	060	5011604	164,00
S20Q-NTS-IL16-24		1	●	060	5011606	164,00
S20Q-NTS-IL22-27		1	●	060	5011616	164,00
S20Q-NTS-IR16-17		1	●	060	5011603	164,00
S20Q-NTS-IR16-20		1	●	060	5011605	164,00
S20Q-NTS-IR16-24		1	●	060	5011607	164,00
S20Q-NTS-IR22-27		1	●	060	5011617	164,00
S2126302-M8X1	THL	1	●	TH4	5101732	86,90
S2126302-M10X1.25	THL	1	●	TH4	5101754	113,00
S2126302-M12X1.25	THL	1	●	TH4	5101753	119,00
S2126302-M12X1.5	THL	1	●	TH4	5101752	105,00
S2126302-M14X1.5	THL	1	●	TH4	5101751	136,00
S2126302-M16X1.5	THL	1	●	TH4	5101750	145,00
S2126305-M8X1	TIN	1	●	TH4	5101749	82,10
S2126305-M10X1.25	TIN	1	●	TH4	5101747	105,00
S2126305-M12X1.25	TIN	1	●	TH4	5101746	112,00
S2126305-M12X1.5	TIN	1	●	TH4	5101745	97,80
S2126305-M14X1.5	TIN	1	●	TH4	5101744	121,00
S2126305-M16X1.5	TIN	1	●	TH4	5101767	130,00
S2156302-M8X1	THL	1	●	TH4	5101766	90,00
S2156302-M10X1	THL	1	●	TH4	5101765	97,60
S2156302-M10X1.25	THL	1	●	TH4	5101764	114,00
S2156302-M12X1.25	THL	1	●	TH4	5101763	125,00
S2156302-M12X1.5	THL	1	●	TH4	5101762	113,00
S2156302-M14X1.5	THL	1	●	TH4	5101761	136,00
S2156302-M16X1.5	THL	1	●	TH4	5101760	159,00
S2156305-M8X1	TIN/VAP	1	●	TH4	5101759	90,00
S2156305-M10X1	TIN/VAP	1	●	TH4	5101758	97,60
S2156305-M10X1.25	TIN/VAP	1	●	TH4	5101757	114,00
S2156305-M12X1.5	TIN/VAP	1	●	TH4	5101779	113,00
S2156305-M14X1.5	TIN/VAP	1	●	TH4	5101778	136,00
S2156305-M16X1.5	TIN/VAP	1	●	TH4	5101777	159,00
S2166305-M8X1	TIN	1	●	TH7	5101790	131,00
S2166305-M10X1	TIN	1	●	TH7	5101789	132,00
S2456302-G1/8	THL	1	●	TH4	5101795	100,00
S2456302-G1/4	THL	1	●	TH4	5101794	119,00
S2456302-G3/8	THL	1	●	TH4	5101793	163,00
S2456302-G1/2	THL	1	●	TH4	5101792	267,00
S25R-NTS-IL16-29		1	●	060	5011608	184,00

Bezeichnung / Designation	Sorte / Grade	VE / US		Disc. Gr.	Article No.	EURO Stück / piece
S25R-NTS-IL22-32		1	●	060	5011618	184,00
S25R-NTS-IR16-29		1	●	060	5011609	184,00
S25R-NTS-IR22-32		1	●	060	5011619	184,00
S32S-NTS-IL16-29		1	●	060	5011610	241,00
S32S-NTS-IL16-36		1	●	060	5011612	241,00
S32S-NTS-IL22-32		1	●	060	5011620	241,00
S32S-NTS-IL22-39		1	●	060	5011622	241,00
S32S-NTS-IR16-29		1	●	060	5011611	241,00
S32S-NTS-IR16-36		1	●	060	5011613	241,00
S32S-NTS-IR22-32		1	●	060	5011621	241,00
S32S-NTS-IR22-39		1	●	060	5011623	241,00
S40T-NTS-IL16-44		1	●	060	5011614	308,00
S40T-NTS-IL22-47		1	●	060	5011624	308,00
S40T-NTS-IR16-44		1	●	060	5011615	308,00
S40T-NTS-IR22-47		1	●	060	5011625	308,00
SBN2020-26-K		1	●	060	5009205	247,00
SBN2520-32-K		1	●	060	5009206	247,00
SBN3229-32-K		1	●	060	5009207	253,00
SBN3229-46-K		1	●	060	5009208	430,00
SBN4037-46-K		1	●	060	5009209	430,00
SCFCL10CA-09		1	●	060	5007875	167,00
SCFCL12CA-12		1	●	060	5007886	167,00
SCFCR10CA-09		1	●	060	5007876	167,00
SCFCR12CA-12		1	●	060	5007885	167,00
SCGT09T304-FM2	WSM20S	10	●	029	7054063	20,39
SCGT09T304-FN2	WNN10	10	●	028	6955656	18,83
SCGT09T304-MM4	WSM01	10	●	029	7021262	21,00
SCGT09T304-MM4	WSM20S	10	●	029	6844624	20,39
SCGT09T304-MN2	WN10	10	●	028	8132992	15,44
SCGT09T304-MN2	WNN10	10	●	028	6955714	18,83
SCGT09T304-MN2	WSM01	10	●	029	7021451	21,00
SCGT09T304-MP4	WPP20G	10	●	029	8204922	21,01
SCGT09T304-MP4	WPP20S	10	●	029	6222745[1]	21,01
SCGT09T308-FM2	WSM20S	10	●	029	7054064	20,39
SCGT09T308-FN2	WNN10	10	●	028	6955657	18,83
SCGT09T308-MK4	WKK20S	10	●	029	6363506	20,39
SCGT09T308-MM4	WSM01	10	●	029	7021263	21,00
SCGT09T308-MM4	WSM20S	10	●	029	6844625	20,39
SCGT09T308-MN2	WN10	10	●	028	8132993	15,44
SCGT09T308-MN2	WNN10	10	●	028	6955715	18,83
SCGT09T308-MN2	WSM01	10	●	029	7021452	21,00
SCGT09T308-MP4	WPP20G	10	●	029	8204923	21,01
SCGT120408-FM2	WSM20S	10	●	029	7054065	21,85
SCGT120408-FN2	WNN10	10	●	028	6955658	20,16
SCGT120408-MK4	WKK20S	10	●	029	6342637	21,85
SCGT120408-MM4	WSM20S	10	●	029	6844626	21,85
SCGT120408-MN2	WN10	10	●	028	8132994	16,54
SCGT120408-MN2	WNN10	10	●	028	6955716	20,16
SCGT120408-MP4	WPP20G	10	●	029	8204924	22,50
SCGW09T304FS-9	WDN10	2	●	025	6674549	110,00
SCGW09T304TS-4	WBK20	2	●	023	7823869	126,00
SCGW09T308TS-4	WBK20	2	●	023	7823870	126,00
SCLCL082B		1	●	060	6346587	94,10
SCLCL1010E06		1	●	060	5327496	96,80
SCLCL10CA-09		1	●	060	5007874	167,00
SCLCL1212F06		1	●	060	5335350	96,80
SCLCL1212F09		1	●	060	5327498	96,80
SCLCL1212J09-S-P		1	●	060	8337933	212,00
SCLCL1616H06		1	●	060	5335353	96,80
SCLCL1616H09		1	●	060	5327590	96,80
SCLCL1616X09-S-P		1	●	060	8337935	212,00
SCLCL163D		1	●	060	6346815	111,00
SCLCL2020K06		1	●	060	5335785	108,00
SCLCL2020K09		1	●	060	5327592	108,00
SCLCL2020K12		1	●	060	5327594	108,00
SCLCL2525M09		1	●	060	5335788	114,00
SCLCL2525M12		1	●	060	5327596	114,00
SCLCR082B		1	●	060	6346814	94,10
SCLCR1010E06		1	●	060	5327497	96,80
SCLCR10CA-09		1	●	060	5007873	167,00

Bezeichnung / Designation	Sorte / Grade	VE / US		Disc. Gr.	Article No.	EURO Stück / piece
SCLCR1212F06		1	●	060	5335352	96,80
SCLCR1212F09		1	●	060	5327499	96,80
SCLCR1212J09-S-P		1	●	060	8337932	212,00
SCLCR12CA-12		1	●	060	5007883	167,00
SCLCR1616H06		1	●	060	5335784	96,80
SCLCR1616H09		1	●	060	5327591	96,80
SCLCR1616X09-S-P		1	●	060	8337934	212,00
SCLCR163D		1	●	060	6346816	111,00
SCLCR2020K06		1	●	060	5335787	108,00
SCLCR2020K09		1	●	060	5327593	108,00
SCLCR2020K12		1	●	060	5327595	108,00
SCLCR2525M09		1	●	060	5335790	114,00
SCLCR2525M12		1	●	060	5327597	114,00
SCMT060204-E47	WPP20S	10	●	019	7077864	9,71
SCMT060204-E47	WSM10S	10	●	019	7077865	9,71
SCMT060204-E47	WSM20S	10	●	019	7077866	9,71
SCMT060204-E47	WSM30S	10	●	019	7077867	9,71
SCMT060204-FM4	WMP20S	10	●	029	7021198	9,71
SCMT060204-FM4	WSM20S	10	●	029	7021199	9,71
SCMT060204-FP4	WPP10G	10	●	029	8204925	9,99
SCMT09T304-E47	WPP20S	10	●	019	7077868	11,31
SCMT09T304-E47	WSM10S	10	●	019	7077869	11,31
SCMT09T304-E47	WSM20S	10	●	019	7077870	11,31
SCMT09T304-FK6	WKK10S	10	●	029	6733990	11,31
SCMT09T304-FK6	WKK20S	10	●	029	6733989	11,31
SCMT09T304-FM4	WMP20S	10	●	029	6464951	11,31
SCMT09T304-FM4	WSM20S	10	●	029	6839051	11,31
SCMT09T304-FM4	WSM30S	10	●	029	6839052	11,31
SCMT09T304-FM6	WSM30S	10	●	029	7054145	11,31
SCMT09T304-FP4	WEP10C	10	●	029	7735657	10,17
SCMT09T304-FP4	WPP10G	10	●	029	8204927	11,65
SCMT09T304-FP4	WPP20G	10	●	029	8204926	11,65
SCMT09T304-FP4	WPP20S	10	■	029	6440266[2]	11,65
SCMT09T304-FP6	WPP20G	10	●	029	8204928	11,65
SCMT09T304-MK4	WKK10S	10	●	029	6485624	11,31
SCMT09T304-MK4	WKK20S	10	●	029	6421278	11,31
SCMT09T304-MM4	WMP20S	10	●	029	6636299	11,31
SCMT09T304-MM4	WSM10S	10	●	029	6836832	11,31
SCMT09T304-MM4	WSM20S	10	●	029	6836831	11,31
SCMT09T304-MP4	WPP20G	10	●	029	8204929	11,65
SCMT09T304-RK4	WKK10S	10	●	029	6651109	11,31
SCMT09T304-RK4	WKK20S	10	●	029	6651120	11,31
SCMT09T304-RM4	WSM20S	10	●	029	6917307	11,31
SCMT09T304-RM4	WSM30S	10	●	029	6917308	11,31
SCMT09T304-RP4	WPP10G	10	●	029	8204932	11,65
SCMT09T304-RP4	WPP20G	10	●	029	8204930	11,65
SCMT09T304-RP4	WPP20S	10	■	029	6444835[2]	11,65
SCMT09T304-RP4	WPP30G	10	●	029	8204931	11,65
SCMT09T304-RP4	WPP30S	10	■	029	6444836[2]	11,65
SCMT09T308-E47	WPP20S	10	●	019	7077872	11,31
SCMT09T308-E47	WSM10S	10	●	019	7077873	11,31
SCMT09T308-E47	WSM20S	10	●	019	7077874	11,31
SCMT09T308-E47	WSM30S	10	●	019	7077875	11,31
SCMT09T308-FK6	WKK10S	10	●	029	6733992	11,31
SCMT09T308-FK6	WKK20S	10	●	029	6733991	11,31
SCMT09T308-FM4	WMP20S	10	●	029	6465023	11,31
SCMT09T308-FM4	WSM20S	10	●	029	6839053	11,31
SCMT09T308-FM4	WSM30S	10	●	029	6839054	11,31
SCMT09T308-FM6	WSM20S	10	●	029	7054146	11,31
SCMT09T308-FM6	WSM30S	10	●	029	7054147	11,31
SCMT09T308-FP4	WEP10C	10	●	029	7735658	10,17
SCMT09T308-FP4	WKP01G	10	●	029	8422892	11,65
SCMT09T308-FP4	WPP10G	10	●	029	8204933	11,65
SCMT09T308-FP4	WPP20G	10	●	029	8204934	11,65
SCMT09T308-FP6	WPP20G	10	●	029	8204935	11,65
SCMT09T308-FP6	WPP20S	10	■	029	6730400[2]	11,65
SCMT09T308-MK4	WKK10S	10	●	029	6485626	11,31
SCMT09T308-MK4	WKK20S	10	●	029	6484711	11,31
SCMT09T308-MM4	WMP20S	10	●	029	6636300	11,31
SCMT09T308-MM4	WSM10S	10	●	029	6836834	11,31

Bezeichnung / Designation	Sorte / Grade	VE / US		Disc. Gr.	Article No.	EURO Stück / piece
SCMT09T308-MM4	WSM20S	10	●	029	6836833	11,31
SCMT09T308-MM4	WSM30S	10	●	029	7054179	11,31
SCMT09T308-MP4	WPP10G	10	●	029	8204937	11,65
SCMT09T308-MP4	WPP20G	10	●	029	8204936	11,65
SCMT09T308-MP4	WPP20S	10	■	029	6353219[1]	11,65
SCMT09T308-PF4	WPP01	10	■	029	5262975[1]	11,65
SCMT09T308-PM5	WAK20	10	●	029	5022072	11,31
SCMT09T308-PM5	WAM30	10	●	029	5025548	11,61
SCMT09T308-PM5	WSM20	10	●	029	5614969	11,31
SCMT09T308-PS4	WAK10	10	■	029	5016291[1]	11,31
SCMT09T308-PS4	WAM20	10	●	029	5016292	11,61
SCMT09T308-PS5	WAM30	10	●	029	5025427	11,61
SCMT09T308-RK4	WKK10S	10	●	029	6651121	11,31
SCMT09T308-RK4	WKK20S	10	●	029	6651122	11,31
SCMT09T308-RM4	WMP20S	10	●	029	6461935	11,31
SCMT09T308-RM4	WSM10S	10	●	029	6839125	11,31
SCMT09T308-RM4	WSM20S	10	●	029	6839126	11,31
SCMT09T308-RM4	WSM30S	10	●	029	6839127	11,31
SCMT09T308-RP4	WPP10G	10	●	029	8204940	11,65
SCMT09T308-RP4	WPP20G	10	●	029	8204938	11,65
SCMT09T308-RP4	WPP20S	10	●	029	6444837[2]	11,65
SCMT09T308-RP4	WPP30G	10	●	029	8204939	11,65
SCMT09T308-RP4	WPP30S	10	■	029	6444839[1]	11,65
SCMT09T312-RP4	WPP10G	10	●	029	8204941	11,65
SCMT120404-FM4	WSM20S	10	●	029	7499336	16,18
SCMT120404-FP4	WPP20G	10	●	029	8204942	16,66
SCMT120404-RK4	WKK10S	10	●	029	6651123	16,18
SCMT120404-RK4	WKK20S	10	●	029	6651124	16,18
SCMT120404-RM4	WSM20S	10	●	029	6917309	16,18
SCMT120404-RM4	WSM30S	10	●	029	6917310	16,18
SCMT120404-RP4	WPP10G	10	●	029	8204944	16,66
SCMT120404-RP4	WPP20G	10	●	029	8204945	16,66
SCMT120404-RP4	WPP20S	10	■	029	6444861[1]	16,66
SCMT120404-RP4	WPP30G	10	●	029	8204943	16,66
SCMT120408-E47	WPP20S	10	●	019	7077876	16,18
SCMT120408-E47	WSM20S	10	●	019	7077878	16,18
SCMT120408-E47	WSM30S	10	●	019	7077879	16,18
SCMT120408-FK6	WKK10S	10	●	029	6733994	16,18
SCMT120408-FK6	WKK20S	10	●	029	6733993	16,18
SCMT120408-FM4	WSM20S	10	●	029	6917269	16,18
SCMT120408-FM4	WSM30S	10	●	029	6917270	16,18
SCMT120408-FM6	WSM20S	10	●	029	7054148	16,18
SCMT120408-FM6	WSM30S	10	●	029	7054149	16,18
SCMT120408-FP4	WPP20G	10	●	029	8204946	16,66
SCMT120408-FP6	WPP20G	10	●	029	8204947	16,66
SCMT120408-FP6	WPP20S	10	■	029	6730401[1]	16,66
SCMT120408-MK4	WKK10S	10	●	029	6485628	16,18
SCMT120408-MK4	WKK20S	10	●	029	6485285	16,18
SCMT120408-MM4	WMP20S	10	●	029	7156981	16,18
SCMT120408-MM4	WSM20S	10	●	029	6836835	16,18
SCMT120408-MP4	WPP10G	10	●	029	8204949	16,66
SCMT120408-MP4	WPP20G	10	●	029	8204948	16,66
SCMT120408-MP4	WPP20S	10	■	029	6450747[1]	16,66
SCMT120408-PM5	WPP20	10	■	029	5199706[1]	16,66
SCMT120408-RK4	WKK10S	10	●	029	6651125	16,18
SCMT120408-RK4	WKK20S	10	●	029	6651126	16,18
SCMT120408-RM4	WMP20S	10	●	029	6462011	16,18
SCMT120408-RM4	WSM10S	10	●	029	6839128	16,18
SCMT120408-RM4	WSM20S	10	●	029	6839129	16,18
SCMT120408-RM4	WSM30S	10	●	029	6839130	16,18
SCMT120408-RP4	WPP10G	10	●	029	8204952	16,66
SCMT120408-RP4	WPP20G	10	●	029	8204950	16,66
SCMT120408-RP4	WPP20S	10	■	029	6444865[1]	16,66
SCMT120408-RP4	WPP30G	10	●	029	8204951	16,66
SCMT120408-RP4	WPP30S	10	■	029	6444866[1]	16,66
SCMT120412-FP4	WPP20G	10	●	029	8204953	16,66
SCMT120412-RK4	WKK10S	10	●	029	6651127	16,18
SCMT120412-RK4	WKK20S	10	●	029	6651128	16,18
SCMT120412-RM4	WMP20S	10	●	029	6462081	16,18
SCMT120412-RM4	WSM20S	10	●	029	6839131	16,18

Bezeichnung / Designation	Sorte / Grade	VE / US		Disc. Gr.	Article No.	EURO Stück / piece
SCMT120412-RM4	WSM30S	10	●	029	6839132	16,18
SCMT120412-RP4	WPP10G	10	●	029	8204956	16,66
SCMT120412-RP4	WPP20G	10	●	029	8204955	16,66
SCMT120412-RP4	WPP30G	10	●	029	8204954	16,66
SCMT120412-RP4	WPP30S	10	■	029	6444881[1]	16,66
SCMW09T304-RK6	WKK20S	10	●	029	6651580	11,31
SCMW09T308-RK6	WKK10S	10	●	029	6651581	11,31
SCMW09T308-RK6	WKK20S	10	●	029	6651582	11,31
SCMW120404-RK6	WKK20S	10	●	029	6651583	16,18
SCMW120408-RK6	WKK20S	10	●	029	6651584	16,18
SCMW120412-RK6	WKK20S	10	●	029	6651585	16,18
SD1001-6IP		1	●	076	7562307	18,03
SD2000-2.5 SW		1	●	095	8251415	12,17
SD2001-6IP		1	●	076	7562308	11,80
SD4000-Q32-25		1	●	095	7821303	481,00
SD4000-Q40-35		1	●	095	7821304	481,00
SD4000-Q50-55		1	●	095	7821305	481,00
SD6000-Q32		1	●	095	7821306	93,40
SD6000-Q40		1	●	095	7821307	93,40
SD6000-Q50		1	●	095	7821308	93,40
SD9000-Q25		1	●	095	7821219	40,90
SD9000-Q32		1	●	095	7821300	43,10
SD9000-Q40		1	●	095	7821301	45,50
SD9000-Q50		1	●	095	7821302	48,50
SDEB090308-A67	WSP45G	10	●	009	8201932	19,22
SDET09T3AZN-F57	WEP20	10	●	009	7786053	14,69
SDET1204AZN-F57	WEP20	10	●	009	7786054	18,43
SDGT06T2PDR-D57	WKP25S	10	●	009	6795976	13,39
SDGT06T2PDR-D57	WKP35G	10	●	009	7169046	16,06
SDGT06T2PDR-D57	WKP35S	10	●	009	6795977	13,39
SDGT06T2PDR-D57	WSM35G	10	●	009	8285060	14,06
SDGT06T2PDR-D57	WSM35S	10	■	009	6795978[1]	14,06
SDGT06T2PDR-D57	WSP45G	10	●	009	7924287	14,07
SDGT09T3AEN-F57	WKP25S	10	●	009	7028051	16,67
SDGT09T3AEN-F57	WKP35S	10	●	009	5917466	16,67
SDGT09T3AEN-F57	WSM35G	10	●	009	8285061	17,50
SDGT09T3AEN-F57	WSM35S	10	■	009	7058553[1]	17,50
SDGT09T3AEN-F57	WSP45G	10	●	009	8201933	17,50
SDGT09T3AEN-F57	WSP45S	10	■	009	7057780[1]	17,50
SDGT09T3AEN-G88	WK10	10	●	009	5004810	13,54
SDGT09T3AEN-G88	WXN15	10	●	009	5021650	16,67
SDGT09T3AZN-F57	WAK15	10	●	009	7021676	16,67
SDGT09T3AZN-F57	WKP25S	10	●	009	7021677	16,67
SDGT09T3AZN-F57	WKP35G	10	●	009	7182230	20,00
SDGT09T3AZN-F57	WKP35S	10	●	009	7676884	16,67
SDGT09T3AZN-F57	WSM35G	10	●	009	8285062	17,50
SDGT09T3AZN-F57	WSM35S	10	■	009	7021679[1]	17,50
SDGT09T3AZN-F57	WSP45G	10	●	009	7924288	17,50
SDGT09T3AZN-G77	WSP45G	10	●	009	7924289	17,50
SDGT09T3PDR-D57	WKP25S	10	●	009	6556205	16,67
SDGT09T3PDR-D57	WKP35G	10	●	009	7170572	20,00
SDGT09T3PDR-D57	WKP35S	10	●	009	6556206	16,67
SDGT09T3PDR-D57	WSM35G	10	●	009	8285063	17,50
SDGT09T3PDR-D57	WSM35S	10	■	009	6556207[1]	17,50
SDGT09T3PDR-D57	WSP45G	10	●	009	7924290	17,50
SDGT1204AZN-F57	WAK15	10	●	009	7021684	20,95
SDGT1204AZN-F57	WKP25S	10	●	009	7021685	20,95
SDGT1204AZN-F57	WKP35G	10	●	009	7182231	25,10
SDGT1204AZN-F57	WKP35S	10	●	009	7676885	20,95
SDGT1204AZN-F57	WSM35G	10	●	009	8285064	22,00
SDGT1204AZN-F57	WSM35S	10	■	009	7021687[1]	22,00
SDGT1204AZN-F57	WSP45G	10	●	009	7924291	22,00
SDGT1204AZN-G77	WSP45G	10	●	009	7924292	22,00
SDGT1204PDR-D57	WKP25S	10	●	009	6796062	20,95
SDGT1204PDR-D57	WKP35G	10	●	009	7170566	25,10
SDGT1204PDR-D57	WKP35S	10	●	009	6796063	20,95
SDGT1204PDR-D57	WSM35G	10	●	009	8285065	22,00
SDGT1204PDR-D57	WSM35S	10	■	009	6796064[1]	22,00
SDGT1204PDR-D57	WSP45G	10	●	009	7924293	22,00
SDGW09T304-A88	WDN20	2	●	006	8168990	96,70

Bezeichnung / Designation	Sorte / Grade	VE / US		Disc. Gr.	Article No.	EURO Stück / piece
SDGW09T3AZR-A88	WDN20	2	●	006	8168992	96,70
SDGW120408-A88	WDN20	2	●	006	8168991	105,00
SDHCL1212F07		1	●	060	5008067	96,80
SDHCL1616H11		1	●	060	5335793	96,80
SDHCL2020K11		1	●	060	5335795	108,00
SDHCL2525M11		1	●	060	5335797	114,00
SDHCR1212F07		1	●	060	5008066	96,80
SDHCR1616H11		1	●	060	5335794	96,80
SDHCR2020K11		1	●	060	5335796	108,00
SDHCR2525M11		1	●	060	5335798	114,00
SDHT06T204-G88	WK10	10	●	009	6952613	13,71
SDHT06T204-G88	WXN15	10	●	009	7469771	17,14
SDHT09T304-G88	WK10	10	●	009	7220874	16,91
SDHT09T304-G88	WXN15	10	●	009	7469772	21,14
SDHT09T308-G88	WK10	10	●	009	6952615	16,91
SDHT09T308-G88	WXN15	10	●	009	7469773	21,14
SDHT09T3AZN-G88	WK10	10	●	009	7021682	16,91
SDHT09T3AZN-G88	WXN15	10	●	009	7469729	21,14
SDHT120408-G88	WK10	10	●	009	6952617	19,88
SDHT120408-G88	WXN15	10	●	009	7469774	24,87
SDHT1204AZN-G88	WK10	10	●	009	7021690	19,88
SDHT1204AZN-G88	WXN15	10	●	009	7469770	24,87
SDHW090308	WTL71	10	■	009	5005033*	17,47
SDHW09T3AEN-A57	WKP35S	10	●	009	5917467	15,25
SDHX09T3AZR-A88	WAK15	10	●	009	7021668	18,42
SDHX09T3AZR-A88	WHH15X	10	●	009	7960064	20,27
SDHX09T3AZR-A88	WXM15	10	●	009	7021669	18,42
SDHX1204AZR-A88	WAK15	10	●	009	7021671	22,69
SDHX1204AZR-A88	WHH15X	10	●	009	7960065	24,96
SDHX1204AZR-A88	WXM15	10	●	009	7021672	22,69
SDJCL1010E07		1	●	060	5327598	96,80
SDJCL1212F07		1	●	060	5008069	96,80
SDJCL1212J11-S-P		1	●	060	8337937	212,00
SDJCL1616H11		1	●	060	5327602	96,80
SDJCL1616X11-S-P		1	●	060	8337939	212,00
SDJCL2020K11		1	●	060	5327604	108,00
SDJCL2525M11		1	●	060	5327606	114,00
SDJCR1010E07		1	●	060	5327599	96,80
SDJCR1212F07		1	●	060	5008068	96,80
SDJCR1212J11-S-P		1	●	060	8337936	212,00
SDJCR1616H11		1	●	060	5327603	96,80
SDJCR1616X11-S-P		1	●	060	8337938	212,00
SDJCR2020K11		1	●	060	5327605	108,00
SDJCR2525M11		1	●	060	5327607	114,00
SDMT06T204-D51	WKP25S	10	●	009	6795982	10,31
SDMT06T204-D51	WKP35G	10	●	009	7169063	12,36
SDMT06T204-D51	WKP35S	10	●	009	6795983	10,31
SDMT06T204-D51	WSP45G	10	●	009	7924294	10,83
SDMT06T204-D57	WKK25G	10	●	009	8441385	10,83
SDMT06T204-D57	WKK25S	10	●	009	6795989	10,83
SDMT06T204-D57	WKP25S	10	●	009	6795985	10,31
SDMT06T204-D57	WKP35G	10	●	009	7169048	12,36
SDMT06T204-D57	WKP35S	10	●	009	6795986	10,31
SDMT06T204-D57	WSM35G	10	●	009	8285066	10,83
SDMT06T204-D57	WSM35S	10	■	009	6795987*	10,83
SDMT06T204-D57	WSP45G	10	●	009	7924295	10,83
SDMT06T204-F57	WAK15	10	●	009	6795990	10,31
SDMT06T204-F57	WKP25S	10	●	009	6795991	10,31
SDMT06T204-F57	WKP35G	10	●	009	7169065	12,36
SDMT06T204-F57	WKP35S	10	●	009	6795992	10,31
SDMT06T204-F57	WSM35G	10	●	009	8285067	10,83
SDMT06T204-F57	WSM35S	10	■	009	6795993*	10,83
SDMT06T204-F57	WSM45X	10	●	009	6841395	13,10
SDMT06T204-F57	WSP45G	10	●	009	7924296	10,83
SDMT06T208-F57	WKP35G	10	●	009	7182238	12,36
SDMT06T208-F57	WKP35S	10	●	009	7676886	10,31
SDMT06T208-F57	WSP45G	10	●	009	7924297	10,83
SDMT06T212-F57	WKP35G	10	●	009	7170580	12,36
SDMT06T212-F57	WKP35S	10	●	009	6795997	10,31
SDMT06T212-F57	WSM35G	10	●	009	8285068	10,83

Bezeichnung / Designation	Sorte / Grade	VE / US		Disc. Gr.	Article No.	EURO Stück / piece
SDMT06T212-F57	WSM35S	10	■	009	6840028*	10,83
SDMT06T212-F57	WSM45X	10	●	009	6841396	13,10
SDMT06T212-F57	WSP45G	10	●	009	7924298	10,83
SDMT06T2ZDR-D57	WKP35G	10	●	009	7170581	12,36
SDMT06T2ZDR-D57	WKP35S	10	●	009	6795995	10,31
SDMT06T2ZDR-D57	WSP45G	10	●	009	7924299	10,83
SDMT09T304-F57	WKP35G	10	●	009	7220872	15,06
SDMT09T304-F57	WKP35S	10	●	009	7676887	12,55
SDMT09T304-F57	WSP45G	10	●	009	7924300	13,18
SDMT09T308-D51	WKP25S	10	●	009	6807395	12,55
SDMT09T308-D51	WKP35G	10	●	009	7170611	15,06
SDMT09T308-D51	WKP35S	10	●	009	6807396	12,55
SDMT09T308-D51	WSP45G	10	●	009	7924301	13,18
SDMT09T308-D57	WKK25G	10	●	009	8284851	13,18
SDMT09T308-D57	WKK25S	10	■	009	6556178*	13,18
SDMT09T308-D57	WKP25S	10	●	009	6556174	12,55
SDMT09T308-D57	WKP35G	10	●	009	7170603	15,06
SDMT09T308-D57	WKP35S	10	●	009	6556175	12,55
SDMT09T308-D57	WSM35G	10	●	009	8285069	13,18
SDMT09T308-D57	WSM35S	10	■	009	6556176*	13,18
SDMT09T308-D57	WSP45G	10	●	009	7924302	13,18
SDMT09T308-F57	WAK15	10	●	009	6556179	12,55
SDMT09T308-F57	WKP25S	10	●	009	6556200	12,55
SDMT09T308-F57	WKP35G	10	●	009	7169067	15,06
SDMT09T308-F57	WKP35S	10	●	009	6556201	12,55
SDMT09T308-F57	WSM35G	10	●	009	8285070	13,18
SDMT09T308-F57	WSM35S	10	■	009	6556202*	13,18
SDMT09T308-F57	WSM45X	10	●	009	6841397	15,95
SDMT09T308-F57	WSP45G	10	●	009	7924303	13,18
SDMT09T312-F57	WKP35G	10	●	009	7182239	15,06
SDMT09T312-F57	WKP35S	10	●	009	7676888	12,55
SDMT09T312-F57	WSP45G	10	●	009	7924304	13,18
SDMT09T316-F57	WKP35G	10	●	009	7182240	15,06
SDMT09T316-F57	WKP35S	10	●	009	7676889	12,55
SDMT09T316-F57	WSP45G	10	●	009	7924305	13,18
SDMT09T320-F57	WKP35G	10	●	009	7170574	15,06
SDMT09T320-F57	WKP35S	10	●	009	6661427	12,55
SDMT09T320-F57	WSM35G	10	●	009	8285071	13,18
SDMT09T320-F57	WSM35S	10	■	009	6840029*	13,18
SDMT09T320-F57	WSM45X	10	●	009	6841398	15,95
SDMT09T320-F57	WSP45G	10	●	009	7924306	13,18
SDMT09T3AEN-D57	WKP35S	10	●	009	5917655	12,55
SDMT09T3AEN-D57	WSM35G	10	●	009	8285072	13,18
SDMT09T3AEN-D57	WSM35S	10	■	009	7058554*	13,18
SDMT09T3AEN-D57	WSP45G	10	●	009	8201934	13,18
SDMT09T3AEN-D57	WSP45S	10	■	009	7057781*	13,18
SDMT09T3AZN-D57	WKK25G	10	●	009	8441383	13,19
SDMT09T3AZN-D57	WKK25S	10	●	009	7034311	13,19
SDMT09T3AZN-D57	WKP25S	10	●	009	7034310	12,55
SDMT09T3AZN-D57	WKP35G	10	●	009	7182177	15,06
SDMT09T3AZN-D57	WKP35S	10	●	009	7676890	12,55
SDMT09T3AZN-D57	WSM35G	10	●	009	8285073	13,18
SDMT09T3AZN-D57	WSM35S	10	■	009	7021623*	13,18
SDMT09T3AZN-D57	WSP45G	10	●	009	7924307	13,18
SDMT09T3AZN-F57	WKP25S	10	●	009	7021625	12,55
SDMT09T3AZN-F57	WKP35G	10	●	009	7182178	15,06
SDMT09T3AZN-F57	WKP35S	10	●	009	7676891	12,55
SDMT09T3AZN-F57	WSM45X	10	●	009	7021627	15,95
SDMT09T3AZN-F57	WSP45G	10	●	009	7924308	13,18
SDMT09T3ZDR-D57	WKP35G	10	●	009	7170575	15,06
SDMT09T3ZDR-D57	WKP35S	10	●	009	6661425	12,55
SDMT09T3ZDR-D57	WSP45G	10	●	009	7924309	13,18
SDMT120408-D51	WKP25S	10	●	009	6796068	15,75
SDMT120408-D51	WKP35G	10	●	009	7170614	18,91
SDMT120408-D51	WKP35S	10	●	009	6796069	15,75
SDMT120408-D51	WSP45G	10	●	009	7924310	16,56
SDMT120408-D57	WKK25G	10	●	009	8284857	16,54
SDMT120408-D57	WKK25S	10	■	009	6796075*	16,54
SDMT120408-D57	WKP25S	10	●	009	6796071	15,75
SDMT120408-D57	WKP35G	10	●	009	7170593	18,91

Bezeichnung / Designation	Sorte / Grade	VE / US		Disc. Gr.	Article No.	EURO Stück / piece
SDMT120408-D57	WKP35S	10	●	009	6796072	15,75
SDMT120408-D57	WSM35G	10	●	009	8285074	16,54
SDMT120408-D57	WSM35S	10	■	009	6796073*	16,54
SDMT120408-D57	WSP45G	10	●	009	7924311	16,56
SDMT120408-F57	WAK15	10	●	009	6796076	15,75
SDMT120408-F57	WKP25S	10	●	009	6796077	15,75
SDMT120408-F57	WKP35G	10	●	009	7170608	18,91
SDMT120408-F57	WKP35S	10	●	009	6796078	15,75
SDMT120408-F57	WSM35G	10	●	009	8285075	16,54
SDMT120408-F57	WSM35S	10	■	009	6796079*	16,54
SDMT120408-F57	WSM45X	10	●	009	6841399	20,02
SDMT120408-F57	WSP45G	10	●	009	7924312	16,56
SDMT120412-F57	WKP35G	10	●	009	7182241	18,91
SDMT120412-F57	WKP35S	10	●	009	7676892	15,75
SDMT120412-F57	WSP45G	10	●	009	7924313	16,56
SDMT120416-F57	WKP35G	10	●	009	7182242	18,91
SDMT120416-F57	WKP35S	10	●	009	7676893	15,75
SDMT120416-F57	WSP45G	10	●	009	7924314	16,56
SDMT120420-F57	WKP35G	10	●	009	7182243	18,91
SDMT120420-F57	WKP35S	10	●	009	7676894	15,75
SDMT120420-F57	WSP45G	10	●	009	7924315	16,56
SDMT120425-F57	WKP35G	10	●	009	7170568	18,91
SDMT120425-F57	WKP35S	10	●	009	6796083	15,75
SDMT120425-F57	WSM35G	10	●	009	8285076	16,54
SDMT120425-F57	WSM35S	10	■	009	6840080*	16,54
SDMT120425-F57	WSM45X	10	●	009	6841400	20,02
SDMT120425-F57	WSP45G	10	●	009	7924316	16,56
SDMT1204AZN-D57	WAK15	10	●	009	7021632	15,75
SDMT1204AZN-D57	WKK25G	10	●	009	8284893	16,54
SDMT1204AZN-D57	WKK25S	10	■	009	7034312*	16,54
SDMT1204AZN-D57	WKP25S	10	●	009	7021633	15,75
SDMT1204AZN-D57	WKP35G	10	●	009	7182190	18,91
SDMT1204AZN-D57	WKP35S	10	●	009	7676895	15,75
SDMT1204AZN-D57	WSM35G	10	●	009	8285077	16,54
SDMT1204AZN-D57	WSM35S	10	■	009	7021635*	16,54
SDMT1204AZN-D57	WSP45G	10	●	009	7924317	16,56
SDMT1204AZN-F57	WKP25S	10	●	009	7021637	15,75
SDMT1204AZN-F57	WKP35G	10	●	009	7182191	18,91
SDMT1204AZN-F57	WKP35S	10	●	009	7676896	15,75
SDMT1204AZN-F57	WSM45X	10	●	009	7021639	20,02
SDMT1204AZN-F57	WSP45G	10	●	009	7924330	16,56
SDMT1204ZDR-D57	WKP35G	10	●	009	7170569	18,91
SDMT1204ZDR-D57	WKP35S	10	●	009	6796081	15,75
SDMT1204ZDR-D57	WSP45G	10	●	009	7924331	16,56
SDMW06T204-A57	WKP25S	10	●	009	6795980	10,31
SDMW06T204-A57	WKP35G	10	●	009	7169045	12,36
SDMW06T204-A57	WKP35S	10	●	009	6795981	10,31
SDMW09T308-A57	WKP25S	10	●	009	6807393	12,55
SDMW09T308-A57	WKP35G	10	●	009	7170577	15,06
SDMW09T308-A57	WKP35S	10	●	009	6807394	12,55
SDMW09T320-A57	WKK25G	10	●	009	8441405	13,19
SDMW09T320-A57	WKK25S	10	●	009	7296841	13,19
SDMW09T320-A57	WKP35G	10	●	009	7296842	15,06
SDMW09T320-A57	WSP45G	10	●	009	7924332	13,18
SDMW09T3AEN-A57	WKP25S	10	●	009	6071209	11,42
SDMW09T3AEN-A57	WKP35S	10	●	009	5917656	11,42
SDMW09T3AZN-A57	WAK15	10	●	009	7021579	11,42
SDMW09T3AZN-A57	WKP25S	10	■	009	7021620*	11,42
SDMW09T3AZN-A57	WKP35G	10	●	009	7182176	15,06
SDMW09T3AZN-A57	WKP35S	10	●	009	7676898	11,42
SDMW120408-A57	WKP25S	10	●	009	6796066	15,75
SDMW120408-A57	WKP35G	10	●	009	7170602	18,91
SDMW120408-A57	WKP35S	10	●	009	6796067	15,75
SDMW120425-A57	WKK25G	10	●	009	8441406	16,54
SDMW120425-A57	WKK25S	10	●	009	7296845	16,54
SDMW120425-A57	WKP35G	10	●	009	7296846	18,91
SDMW120425-A57	WSP45G	10	●	009	7924333	16,56
SDMW1204AZN-A57	WAK15	10	●	009	7021629	15,75
SDMW1204AZN-A57	WKP25S	10	●	009	7021630	15,75
SDMW1204AZN-A57	WKP35G	10	●	009	7182179	18,91

Bezeichnung / Designation	Sorte / Grade	VE / US		Disc. Gr.	Article No.	EURO Stück / piece
SDMW1204AZN-A57	WKP35S	10	●	009	7676900	15,75
SDMX0904ZDR-E27	WKP35G	10	●	009	8061855	15,06
SDMX0904ZDR-E27	WKP35S	10	●	009	8061856	12,55
SDMX0904ZDR-E27	WSM35G	10	●	009	8285078	13,18
SDMX0904ZDR-E27	WSM35S	10	■	009	8061857*	13,18
SDMX0904ZDR-E27	WSM45X	10	●	009	8061859	15,95
SDMX0904ZDR-E27	WSP45G	10	●	009	8061858	13,18
SDMX0904ZDR-E57	WKP35G	10	●	009	8301883	15,06
SDMX0904ZDR-E57	WSM35G	10	●	009	8359972	13,18
SDMX0904ZDR-E57	WSM45X	10	●	009	8301885	15,95
SDMX0904ZDR-E57	WSP45G	10	●	009	8301882	13,18
SDMX1205ZDR-E27	WKP35G	10	●	009	8061850	18,91
SDMX1205ZDR-E27	WKP35S	10	●	009	8061851	15,75
SDMX1205ZDR-E27	WSM35G	10	●	009	8285079	16,54
SDMX1205ZDR-E27	WSM35S	10	■	009	8061852*	16,54
SDMX1205ZDR-E27	WSM45X	10	●	009	8061854	20,02
SDMX1205ZDR-E27	WSP45G	10	●	009	8061853	16,56
SDMX1205ZDR-E57	WKP35G	10	●	009	8301887	18,91
SDMX1205ZDR-E57	WSM35G	10	●	009	8359973	16,56
SDMX1205ZDR-E57	WSM45X	10	●	009	8301889	20,02
SDMX1205ZDR-E57	WSP45G	10	●	009	8301886	16,56
SDNCN1010E07		1	●	060	5327608	96,80
SDNCN1212F07		1	●	060	5327609	96,80
SDNCN1616H11		1	●	060	5327610	96,80
SDNCN2020K11		1	●	060	5327611	108,00
SDNCN2525M11		1	●	060	5327612	114,00
SDNT090308	WPM	10	●	009	5004827	10,23
SDNT090308	WTL71	10	●	009	5005693	12,56
SDNW090308	WKM	10	●	009	5004609	7,93
SDNW090308	WPM	10	●	009	5004610	7,93
SEHT1204AFN	WK10	10	●	009	5004953	20,75
SEHT1204AFN	WKP35S	10	●	009	5917658	27,70
SEHT1204AFN	WSM35G	10	●	009	8285080	29,00
SEHT1204AFN	WSM35S	10	■	009	7058555*	29,00
SEHT1204AFN	WSP45G	10	●	009	8201935	29,00
SEHT1204AFN	WSP45S	10	■	009	7057782*	29,00
SEHT1204AFN-K88	WK10	10	●	009	5004774	27,30
SEHW1204AFN	WAK15	10	●	009	5015777	25,10
SEHW1204AFN	WKM	10	●	009	5004946	18,97
SEHW1204AFN	WKP25S	10	●	009	7028052	25,10
SEHW1204AFN	WKP35G	10	●	009	7421272	30,10
SEHW1204AFN	WKP35S	10	●	009	5917659	25,10
SEHW1204AFN	WTP35	10	●	009	5006051	25,70
SEHW1504AFN	WKP35S	10	●	009	5917760	33,30
SEKN1203AFN	WKP35S	10	●	009	5917761	17,48
SEKN1504AFN	WKP35S	10	●	009	5917763	23,89
SEKR1203AFTN	WKP35S	10	●	009	5917765	19,08
SEMR1203AFTN	WKP35S	10	●	009	5917769	12,81
SFFW1203EFR	WK10	10	●	009	5004658	23,74
SL0001		1	●	075	7415071	124,00
SL0002		1	●	075	7415072	124,00
SL0003		1	●	075	7415073	124,00
SL0004		1	●	075	7415074	124,00
SL0005		1	●	075	7415075	131,00
SL0006		1	●	075	7415076	131,00
SL0007		1	●	075	7415077	131,00
SL0008		1	●	075	7415078	131,00
SL0009		1	●	075	7415079	183,00
SL0010		1	●	075	7415100	183,00
SL0011		1	●	075	7415101	144,00
SL0012		1	●	075	7415102	144,00
SL0013		1	●	075	7415103	201,00
SL0014		1	●	075	7415104	201,00
SL0015		1	●	075	7415105	144,00
SL0016		1	●	075	7415106	144,00
SL0017		1	●	075	7415107	174,00
SL0018		1	●	075	7415108	174,00
SL0019		1	●	075	7415109	174,00
SL0020		1	●	075	7415110	174,00
SL0021		1	●	075	7415111	183,00

Bezeichnung / Designation	Sorte / Grade	VE / US		Disc. Gr.	Article No.	EURO Stück / piece
SL0022		1	●	075	7415112	183,00
SL0023		1	●	075	7415113	183,00
SL0024		1	●	075	7415114	183,00
SL0025		1	●	075	7415115	183,00
SL0026		1	●	075	7415116	183,00
SL0027		1	●	075	7415117	201,00
SL0028		1	●	075	7415118	201,00
SL0029		1	●	075	7415119	201,00
SL0030		1	●	075	7415120	201,00
SNEF120408R-B67	WKK25G	10	●	004	8284861	31,10
SNEF120408R-B67	WKK25S	10	■	004	6702102*	31,10
SNEF120408R-B67	WKP25S	10	●	004	6191593	29,60
SNEF120408R-B67	WKP35G	10	●	004	7347397	35,50
SNEF1204PNN-A27	WAK15	10	●	004	6514009	29,60
SNEF1204PNN-A27	WHH15X	10	●	009	8159206	32,60
SNEX1204PNN-A27	WAK15	10	●	004	7038957	29,60
SNEX1204PNN-A27	WHH15X	10	●	004	7960074	32,60
SNEX1204PNR-B67	WAK15	10	●	004	7038959	29,60
SNEX1204PNR-B67	WHH15X	10	●	004	7960075	32,60
SNEX15T612R-B67	WKP35S	10	●	004	7469960	36,70
SNGA120408SM-S	WCH10C	10	●	024	8064417	17,84
SNGA120408T02020	WCK10	10	●	024	7349626	24,96
SNGA120408TM-4	WBH20	2	●	023	7643584	123,00
SNGA120408TM-4	WBH30	2	●	023	8060973	123,00
SNGA120408TS-4	WBK20	2	●	023	7823848	123,00
SNGA120412SM-S	WCH10C	10	●	024	8064418	17,84
SNGA120412T02020	WCK10	10	●	024	7349627	24,96
SNGA120412TM-4	WBH20	2	●	023	7643585	123,00
SNGA120412TM-4	WBH30	2	●	023	8060974	123,00
SNGA120412TS-4	WBK20	2	●	023	7823851	123,00
SNGA120416T02020	WCK10	10	●	024	7349628	24,96
SNGN120408TM-S	WBK30	2	●	023	7823849	209,00
SNGN120412T02020	WCK10	10	●	024	7349629	24,96
SNGN120412TM-S	WBK30	2	●	023	7823850	209,00
SNGN120416T02020	WCK10	10	●	024	7349630	24,96
SNGN120416TM-S	WBK30	2	●	023	7823852	209,00
SNGN120708T01020	WWS20	10	●	024	6189036	39,40
SNGN120712T01020	WIS10	10	●	024	6188206	22,11
SNGN120712T01020	WWS20	10	●	024	6189037	39,40
SNGN120712T02020	WCK10	10	●	024	7349631	28,70
SNGX0904ANN-F57	WKK25G	10	●	004	8284922	23,57
SNGX0904ANN-F57	WKK25S	10	●	004	7545110	23,57
SNGX0904ANN-F57	WKP25S	10	●	004	7545109	22,45
SNGX0904ANN-F57	WKP35G	10	●	004	7545111	26,90
SNGX0904ANN-F57	WKP35S	10	●	004	7677672	22,45
SNGX0904ANN-F57	WSM35G	10	●	004	8441380	23,58
SNGX0904ANN-F57	WSM35S	10	■	004	7545112*	23,58
SNGX0904ANN-F57	WSP45G	10	●	004	7924334	23,57
SNGX0904ANN-F67	WKP35G	10	■	004	7545116*	26,90
SNGX0904ANN-F67	WKP35S	10	■	004	7677673*	22,45
SNGX0904ANN-F67	WSM35G	10	●	004	8285081	23,57
SNGX0904ANN-F67	WSM35S	10	■	004	7545117*	23,57
SNGX0904ANN-F67	WSP45G	10	●	004	7924335	23,57
SNGX0904ZNN-F57	WKK25G	10	●	004	8284926	23,57
SNGX0904ZNN-F57	WKK25S	10	■	004	7545121*	23,57
SNGX0904ZNN-F57	WKP25S	10	●	004	7545122	22,45
SNGX0904ZNN-F57	WKP35G	10	●	004	7545123	26,90
SNGX0904ZNN-F57	WSP45G	10	●	004	7924336	23,57
SNGX0904ZNN-F67	WAK15	10	●	004	7545126	22,45
SNGX0904ZNN-F67	WKP25S	10	●	004	7545127	22,45
SNGX0904ZNN-F67	WKP35G	10	●	004	7545128	26,90
SNGX0904ZNN-F67	WSM35G	10	●	004	8285082	23,57
SNGX0904ZNN-F67	WSM35S	10	■	004	7545129*	23,57
SNGX0904ZNN-F67	WSP45G	10	●	004	7924337	23,57
SNGX120512-F57	WKP25S	10	●	004	6069398	25,60
SNGX120512-F57	WKP35G	10	●	004	7170560	30,70
SNGX120512-F57	WKP35S	10	●	004	5887071	25,60
SNGX120512-F57	WSM35G	10	●	004	8285083	26,90
SNGX120512-F57	WSM35S	10	■	004	6161555*	26,90
SNGX120512-F57	WSP45G	10	●	004	7924338	26,90

Bezeichnung / Designation	Sorte / Grade	VE / US		Disc. Gr.	Article No.	EURO Stück / piece
SNGX1205ANN-F27	WKP25S	10	●	004	6069540	25,60
SNGX1205ANN-F27	WKP35G	10	●	004	7347400	30,70
SNGX1205ANN-F27	WKP35S	10	●	004	5887073	25,60
SNGX1205ANN-F57	WKK25G	10	●	004	8284853	26,90
SNGX1205ANN-F57	WKK25S	10	■	004	6702104*	26,90
SNGX1205ANN-F57	WKP25S	10	●	004	6069541	25,60
SNGX1205ANN-F57	WKP35G	10	●	004	7170609	30,70
SNGX1205ANN-F57	WKP35S	10	●	004	5887074	25,60
SNGX1205ANN-F57	WSM35G	10	●	004	8285084	26,90
SNGX1205ANN-F57	WSM35S	10	■	004	6161558*	26,90
SNGX1205ANN-F57	WSP45G	10	●	004	7924339	26,90
SNGX1205ANN-F67	WAK15	10	●	004	5040941	25,60
SNGX1205ANN-F67	WKP25S	10	●	004	6069542	25,60
SNGX1205ANN-F67	WKP35G	10	●	004	7347401	30,70
SNGX1205ANN-F67	WKP35S	10	●	004	5887075	25,60
SNGX1205ANN-F67	WSM35G	10	●	004	8285085	26,90
SNGX1205ANN-F67	WSM35S	10	■	004	6161559*	26,90
SNGX1205ANN-F67	WSP45G	10	●	004	7924340	26,90
SNGX1205ENN-F27	WKP25S	10	●	004	6069543	25,60
SNGX1205ENN-F27	WKP35G	10	●	004	7347402	30,70
SNGX1205ENN-F27	WKP35S	10	●	004	5887076	25,60
SNGX1205ENN-F57	WKK25G	10	●	004	8284854	26,90
SNGX1205ENN-F57	WKK25S	10	■	004	6702105*	26,90
SNGX1205ENN-F57	WKP25S	10	●	004	6069544	25,60
SNGX1205ENN-F57	WKP35G	10	●	004	7170594	30,70
SNGX1205ENN-F57	WKP35S	10	●	004	5887077	25,60
SNGX1205ENN-F57	WSM35G	10	●	004	8441384	26,90
SNGX1205ENN-F57	WSM35S	10	■	004	6161601*	26,90
SNGX1205ENN-F57	WSP45G	10	●	004	7924341	26,90
SNGX1205ENN-F67	WAK15	10	●	004	5101042	25,60
SNGX1205ENN-F67	WKP25S	10	●	004	6069545	25,60
SNGX1205ENN-F67	WKP35S	10	●	004	5887078	25,60
SNGX1205ENN-F67	WSM35G	10	●	004	8285086	26,90
SNGX1205ENN-F67	WSM35S	10	■	004	6161603*	26,90
SNGX1205ENN-F67	WSP45G	10	●	004	8201936	26,90
SNGX1205ZNN-F27	WKP25S	10	●	004	6069396	25,60
SNGX1205ZNN-F27	WKP35G	10	●	004	7347404	30,70
SNGX1205ZNN-F27	WKP35S	10	●	004	5887090	25,60
SNGX1205ZNN-F57	WKK25G	10	●	004	8284850	26,90
SNGX1205ZNN-F57	WKK25S	10	■	004	6702106*	26,90
SNGX1205ZNN-F57	WKP25S	10	●	004	6069546	25,60
SNGX1205ZNN-F57	WKP35G	10	●	004	7170590	30,70
SNGX1205ZNN-F57	WKP35S	10	●	004	5887093	25,60
SNGX1205ZNN-F57	WSM35G	10	●	004	8285087	26,90
SNGX1205ZNN-F57	WSM35S	10	■	004	6161604*	26,90
SNGX1205ZNN-F57	WSP45G	10	●	004	7924342	26,90
SNGX1205ZNN-F67	WAK15	10	●	004	5101033	25,60
SNGX1205ZNN-F67	WKP25S	10	●	004	6069547	25,60
SNGX1205ZNN-F67	WKP35G	10	●	004	7347406	30,70
SNGX1205ZNN-F67	WKP35S	10	●	004	5887095	25,60
SNGX1205ZNN-F67	WSM35G	10	●	004	8285088	26,90
SNGX1205ZNN-F67	WSM35S	10	■	004	6161605*	26,90
SNGX1205ZNN-F67	WSP45G	10	●	004	7924343	26,90
SNGX120716T02020	WCK10	10	■	024	7349634	28,70
SNGX1606ANN-F57	WKP35S	10	●	004	5887110	30,10
SNGX1606ANN-F57	WSP45G	10	●	004	8112899	31,60
SNHQ1205ZZR-A57T	WAK15	10	●	009	5015780	39,80
SNHQ1205ZZR-A57T	WKP25S	10	●	009	6069551	39,80
SNHQ1205ZZR-A57T	WKP35S	10	●	009	5917802	39,80
SNHX0904ANN-K88	WK10	10	●	004	7545133	17,96
SNHX0904ANN-K88	WXN15	10	●	004	7545134	22,45
SNHX0904ZNN-K88	WK10	10	●	004	7545135	17,96
SNHX0904ZNN-K88	WXN15	10	●	004	7545136	22,45
SNHX1205ANN-K88	WK10	10	●	004	5623748	19,44
SNHX1205ANN-K88	WXN15	10	●	004	5623813	23,30
SNHX1205ZNN-K88	WK10	10	●	004	7545150	19,44
SNHX1205ZNN-K88	WXN15	10	●	004	7545151	23,30
SNMA090308-RK5	WKK20S	10	●	027	6391074	9,16
SNMA120408-RK5	WKK10S	10	●	027	6411649	14,01
SNMA120408-RK5	WKK20S	10	●	027	6391225	14,01

Bezeichnung / Designation	Sorte / Grade	VE / US		Disc. Gr.	Article No.	EURO Stück / piece
SNMA120412-RK5	WKK10S	10	●	027	6411711	14,01
SNMA120412-RK5	WKK20S	10	●	027	6391270	14,01
SNMA120412-RK7	WKK10S	10	●	027	6435091	14,01
SNMA120412-RK7	WKK20S	10	●	027	6411242	14,01
SNMA120416-RK5	WKK10S	10	●	027	6411713	14,01
SNMA120416-RK5	WKK20S	10	●	027	6391636	14,01
SNMA120416-RK7	WKK10S	10	●	027	6435095	14,01
SNMA120416-RK7	WKK20S	10	●	027	6411563	14,01
SNMA150612-RK5	WKK10S	10	●	027	6411716	22,27
SNMA150612-RK5	WKK20S	10	●	027	6394620	22,27
SNMA150616-RK5	WKK20S	10	●	027	6394729	22,27
SNMA150616-RK7	WKK10S	10	●	027	6435097	22,27
SNMA150616-RK7	WKK20S	10	●	027	6411783	22,27
SNMA190616-RK5	WKK10S	10	●	027	6411743	31,10
SNMA190616-RK5	WKK20S	10	●	027	6395839	31,10
SNMA190616-RK7	WKK10S	10	●	027	6435136	31,10
SNMA190616-RK7	WKK20S	10	●	027	6411870	31,10
SNMA190624-RK5	WKK20S	10	●	027	6395933	31,10
SNMG090308-FP5	WPP10G	10	●	027	8116073	9,45
SNMG090308-FP5	WPP20G	10	●	027	8116074	9,45
SNMG090308-MK5	WKK10S	10	●	027	6356458	9,16
SNMG090308-MK5	WKK20S	10	●	027	6160877	9,16
SNMG090308-MP3	WPP10G	10	●	027	8116100	9,45
SNMG090308-MP3	WPP20G	10	●	027	8116101	9,45
SNMG090308-MP5	WPP20G	10	●	027	8116108	9,45
SNMG120404-FM5	WSM10S	10	●	027	8066674	14,01
SNMG120404-FM5	WSM20S	10	●	027	8066675	14,01
SNMG120404-FP5	WPP10G	10	●	027	8116075	14,45
SNMG120404-FP5	WPP20G	10	●	027	8116076	14,45
SNMG120404-MM5	WSM20S	10	●	027	7251956	14,01
SNMG120404-MM5	WSM30S	10	●	027	7251957	14,01
SNMG120404-MP3	WPP20G	10	●	027	8116102	14,45
SNMG120408-FM5	WSM10S	10	●	027	7091920	14,01
SNMG120408-FM5	WSM20S	10	●	027	7091921	14,01
SNMG120408-FP5	WPP10G	10	●	027	8116077	14,45
SNMG120408-FP5	WPP20G	10	●	027	8116078	14,45
SNMG120408-MK5	WKK10S	10	●	027	6353304	14,01
SNMG120408-MK5	WKK20S	10	●	027	6070386	14,01
SNMG120408-MM5	WMP20S	10	●	027	7376606	14,01
SNMG120408-MM5	WSM10S	10	●	027	7251958	14,01
SNMG120408-MM5	WSM20S	10	●	027	7251959	14,01
SNMG120408-MM5	WSM30S	10	●	027	7251960	14,01
SNMG120408-MP3	WPP10G	10	●	027	8116103	14,45
SNMG120408-MP3	WPP20G	10	●	027	8116104	14,45
SNMG120408-MP3	WPP30G	10	●	027	8116105	14,45
SNMG120408-MP5	WPP10G	10	●	027	8116109	14,45
SNMG120408-MP5	WPP20G	10	●	027	8116110	14,45
SNMG120408-MP5	WPP20S	10	■	027	6249953[1]	14,45
SNMG120408-MP5	WPP30G	10	●	027	8116111	14,45
SNMG120408-MU5	WMP20S	10	●	027	7895061	14,01
SNMG120408-MU5	WPP10G	10	●	027	8116122	14,45
SNMG120408-MU5	WPP20G	10	●	027	8116123	14,45
SNMG120408-MU5	WSM20S	10	●	027	7895062	14,01
SNMG120408-NM4	WAM30	10	●	027	5016713	14,35
SNMG120408-NM4	WSM10	10	●	027	5847174	14,01
SNMG120408-NM5	WAK10	10	●	027	5016679	14,01
SNMG120408-NMS	WSM01	10	●	027	7837154	14,42
SNMG120408-NMS	WSM10S	10	●	027	7837152	14,01
SNMG120408-NMS	WSM20S	10	●	027	7837153	14,01
SNMG120408-NR4	WAM30	10	●	027	5016900	14,35
SNMG120408-NRS	WSM10S	10	●	027	7053921	14,01
SNMG120408-NRS	WSM20S	10	●	027	7053922	14,01
SNMG120408-NRS	WSM30S	10	●	027	7053923	14,01
SNMG120408-RM5	WMP20S	10	●	027	7251127	14,01
SNMG120408-RM5	WSM20S	10	●	027	7251128	14,01
SNMG120408-RM5	WSM30S	10	●	027	7251129	14,01
SNMG120408-RP5	WPP10G	10	●	027	8116124	14,45
SNMG120408-RP5	WPP20G	10	●	027	8116125	14,45
SNMG120408-RP5	WPP20S	10	■	027	6176688[1]	14,45
SNMG120408-RP5	WPP30G	10	●	027	8116126	14,45

Bezeichnung / Designation	Sorte / Grade	VE / US		Disc. Gr.	Article No.	EURO Stück / piece
SNMG120408-RP7	WPP20G	10	●	027	8116147	14,45
SNMG120408-RP7	WPP30G	10	●	027	8116148	14,45
SNMG120412-FM5	WMP20S	10	●	027	7499335	14,01
SNMG120412-FP5	WPP20G	10	●	027	8116079	14,45
SNMG120412-MK5	WKK10S	10	●	027	6353305	14,01
SNMG120412-MK5	WKK20S	10	●	027	6121087	14,01
SNMG120412-MM5	WMP20S	10	●	027	7376607	14,01
SNMG120412-MM5	WSM10S	10	●	027	7251961	14,01
SNMG120412-MM5	WSM20S	10	●	027	7251962	14,01
SNMG120412-MM5	WSM30S	10	●	027	7251963	14,01
SNMG120412-MP3	WPP10G	10	●	027	8116106	14,45
SNMG120412-MP3	WPP20G	10	●	027	8116107	14,45
SNMG120412-MP5	WPP05G	10	●	027	8411471	14,45
SNMG120412-MP5	WPP05S	10	■	027	6613517[1]	14,45
SNMG120412-MP5	WPP10G	10	●	027	8116112	14,45
SNMG120412-MP5	WPP20G	10	●	027	8116113	14,45
SNMG120412-MP5	WPP20S	10	■	027	6303623[1]	14,45
SNMG120412-MP5	WPP30G	10	●	027	8116114	14,45
SNMG120412-NF4	WSM10	10	●	027	5847618	14,01
SNMG120412-NM5	WAK30	10	●	027	5118116	14,01
SNMG120412-NMS	WSM01	10	●	027	7837157	14,42
SNMG120412-NMS	WSM10S	10	●	027	7837155	14,01
SNMG120412-NMS	WSM20S	10	■	027	7837156[1]	14,01
SNMG120412-NRS	WSM10S	10	●	027	7053924	14,01
SNMG120412-NRS	WSM20S	10	●	027	7053925	14,01
SNMG120412-NRS	WSM30S	10	●	027	7053926	14,01
SNMG120412-NRT	WS10	10	●	027	5595812	10,65
SNMG120412-NRT	WSM20S	10	●	027	7054030	14,01
SNMG120412-RM5	WMP20S	10	●	027	7251130	14,01
SNMG120412-RM5	WSM20S	10	●	027	7251131	14,01
SNMG120412-RM5	WSM30S	10	●	027	7251132	14,01
SNMG120412-RP5	WPP05G	10	●	027	8411472	14,45
SNMG120412-RP5	WPP05S	10	■	027	6613538[1]	14,45
SNMG120412-RP5	WPP10G	10	●	027	8116127	14,45
SNMG120412-RP5	WPP20G	10	●	027	8116128	14,45
SNMG120412-RP5	WPP20S	10	■	027	6300782[1]	14,45
SNMG120412-RP5	WPP30G	10	●	027	8116129	14,45
SNMG120412-RP7	WPP20G	10	●	027	8116149	14,45
SNMG120412-RP7	WPP30G	10	●	027	8116150	14,45
SNMG120416-MK5	WKK10S	10	●	027	6353420	14,01
SNMG120416-MK5	WKK20S	10	●	027	6123817	14,01
SNMG120416-MP5	WPP10G	10	●	027	8116115	14,45
SNMG120416-MP5	WPP20G	10	●	027	8116116	14,45
SNMG120416-NMS	WSM01	10	■	027	7837160[1]	14,42
SNMG120416-NMS	WSM10S	10	●	027	7837158	14,01
SNMG120416-NMS	WSM20S	10	■	027	7837159[1]	14,01
SNMG120416-RM5	WSM20S	10	●	027	7251133	14,01
SNMG120416-RM5	WSM30S	10	●	027	7251134	14,01
SNMG120416-RP5	WPP10G	10	●	027	8116130	14,45
SNMG120416-RP5	WPP20G	10	●	027	8116131	14,45
SNMG120416-RP5	WPP20S	10	●	027	6178404[2]	14,45
SNMG120416-RP5	WPP30G	10	●	027	8116132	14,45
SNMG120416-RP5	WPP30S	10	■	027	6300786[1]	14,45
SNMG120416-RP7	WPP10G	10	●	027	8116151	14,45
SNMG120416-RP7	WPP10S	10	■	027	6815832[1]	14,45
SNMG120416-RP7	WPP20G	10	●	027	8116152	14,45
SNMG120416-RP7	WPP30G	10	●	027	8116153	14,45
SNMG150608-MP5	WPP20G	10	●	027	8116117	22,95
SNMG150612-MK5	WKK10S	10	●	027	6356483	22,27
SNMG150612-MK5	WKK20S	10	●	027	6145690	22,27
SNMG150612-MP5	WPP20G	10	●	027	8116118	22,95
SNMG150612-MP5	WPP20S	10	■	027	6256311[1]	22,95
SNMG150612-MP5	WPP30G	10	●	027	8116119	22,95
SNMG150612-NRT	WSM20S	10	●	027	7054031	22,27
SNMG150612-RM5	WMP20S	10	●	027	7251135	22,27
SNMG150612-RM5	WSM20S	10	●	027	7251136	22,27
SNMG150612-RM5	WSM30S	10	●	027	7251137	22,27
SNMG150612-RP5	WPP05G	10	●	027	8411473	22,95
SNMG150612-RP5	WPP05S	10	■	027	6613540[1]	22,95
SNMG150612-RP5	WPP10G	10	●	027	8116133	22,95

Bezeichnung / Designation	Sorte / Grade	VE / US		Disc. Gr.	Article No.	EURO Stück / piece
SNMG150612-RP5	WPP20G	10	●	027	8116134	22,95
SNMG150612-RP5	WPP30G	10	●	027	8116135	22,95
SNMG150612-RP7	WPP10G	10	●	027	8116154	22,95
SNMG150612-RP7	WPP20G	10	●	027	8116155	22,95
SNMG150612-RP7	WPP30G	10	●	027	8116156	22,95
SNMG150616-MK5	WKK10S	10	●	027	6356538	22,27
SNMG150616-MK5	WKK20S	10	●	027	6145788	22,27
SNMG150616-MP5	WPP10G	10	●	027	8116120	22,95
SNMG150616-MP5	WPP20G	10	●	027	8116121	22,95
SNMG150616-NRS	WSM10S	10	●	027	7053927	22,27
SNMG150616-NRS	WSM20S	10	●	027	7053928	22,27
SNMG150616-RM5	WSM20S	10	●	027	7251139	22,27
SNMG150616-RM5	WSM30S	10	●	027	7251140	22,27
SNMG150616-RP5	WPP05S	10	■	027	6613541[1]	22,95
SNMG150616-RP5	WPP10G	10	●	027	8116136	22,95
SNMG150616-RP5	WPP20G	10	●	027	8116137	22,95
SNMG150616-RP5	WPP30G	10	●	027	8116138	22,95
SNMG150616-RP7	WKP30S	10	●	027	6930012	22,27
SNMG150616-RP7	WPP10G	10	●	027	8116157	22,95
SNMG150616-RP7	WPP20G	10	●	027	8116158	22,95
SNMG150616-RP7	WPP30G	10	●	027	8116159	22,95
SNMG190612-MK5	WKK10S	10	●	027	6356990	31,10
SNMG190612-MK5	WKK20S	10	●	027	6145866	31,10
SNMG190612-NRS	WSM10S	10	●	027	7053929	31,10
SNMG190612-NRS	WSM20S	10	●	027	7053930	31,10
SNMG190612-RM5	WMP20S	10	●	027	7251141	31,10
SNMG190612-RM5	WSM20S	10	●	027	7251142	31,10
SNMG190612-RM5	WSM30S	10	●	027	7251143	31,10
SNMG190612-RP5	WPP10G	10	●	027	8116139	32,10
SNMG190612-RP5	WPP20G	10	●	027	8116140	32,10
SNMG190612-RP5	WPP30G	10	●	027	8116141	32,10
SNMG190612-RP7	WPP20G	10	●	027	8116160	32,10
SNMG190612-RP7	WPP30G	10	●	027	8116161	32,10
SNMG190616-MK5	WKK20S	10	●	027	6149770	31,10
SNMG190616-NRS	WSM10S	10	●	027	7053931	31,10
SNMG190616-NRS	WSM20S	10	●	027	7053932	31,10
SNMG190616-NRT	WS10	10	●	027	5638364	23,69
SNMG190616-RM5	WSM20S	10	●	027	7251145	31,10
SNMG190616-RM5	WSM30S	10	●	027	7251146	31,10
SNMG190616-RP5	WPP20G	10	●	027	8116142	32,10
SNMG190616-RP5	WPP30G	10	●	027	8116143	32,10
SNMG190616-RP7	WKP30S	10	●	027	6930013	31,10
SNMG190616-RP7	WPP10G	10	●	027	8116162	32,10
SNMG190616-RP7	WPP20G	10	●	027	8116163	32,10
SNMG190616-RP7	WPP30G	10	●	027	8116164	32,10
SNMG190624-RP5	WPP20G	10	●	027	8116144	32,10
SNMG190624-RP7	WPP20G	10	●	027	8116165	32,10
SNMG190624-RP7	WPP30G	10	●	027	8116166	32,10
SNMG250924-RP5	WPP20G	5	●	027	8116145	71,50
SNMG250924-RP5	WPP30G	5	●	027	8116146	71,50
SNMG250924-RP7	WKP30S	5	●	027	6930014	69,40
SNMG250924-RP7	WPP20G	5	●	027	8116167	71,50
SNMM120408-HU3	WPP20G	10	●	027	8138376	14,44
SNMM120408-HU3	WPP30G	10	●	027	8138377	14,44
SNMM120412-HU3	WPP20G	10	●	027	8138378	14,44
SNMM120412-HU5	WMP20S	10	●	027	7583855	14,01
SNMM120412-HU5	WPP20G	10	●	027	8116196	14,44
SNMM120412-HU5	WSM20S	10	■	027	7583800[1]	14,00
SNMM120412-HU5	WSM30S	10	●	027	7583801	14,00
SNMM120416-HU3	WPP10G	10	●	027	8138379	14,44
SNMM120416-HU3	WPP20G	10	●	027	8138380	14,44
SNMM150612-HU3	WPP20G	10	●	027	8138381	22,94
SNMM150612-HU5	WMP20S	10	●	027	7583857	22,27
SNMM150612-HU5	WPP20G	10	●	027	8116197	22,94
SNMM150612-HU5	WSM20S	10	■	027	7583802[1]	22,27
SNMM150612-HU5	WSM30S	10	●	027	7583803	22,27
SNMM150616-HU3	WPP10G	10	●	027	8138383	22,94
SNMM150616-HU3	WPP20G	10	●	027	8138382	22,94
SNMM150616-HU7	WPP10G	10	●	027	8138436	22,94
SNMM150616-HU7	WPP20G	10	●	027	8138435	22,94

Bezeichnung / Designation	Sorte / Grade	VE / US		Disc. Gr.	Article No.	EURO Stück / piece
SNMM150624-HU3	WPP20G	10	●	027	8138384	22,94
SNMM150624-HU7	WPP10G	10	●	027	8262472	22,94
SNMM150624-HU7	WPP20G	10	●	027	8138437	22,94
SNMM190612-HU3	WPP10G	10	●	027	8138385	32,10
SNMM190612-HU3	WPP20G	10	●	027	8138387	32,10
SNMM190612-HU3	WPP30G	10	●	027	8138386	32,10
SNMM190612-HU5	WMP20S	10	●	027	7583859	31,10
SNMM190612-HU5	WPP20G	10	●	027	8116198	32,10
SNMM190612-HU5	WSM20S	10	●	027	7583804[1]	31,10
SNMM190612-HU5	WSM30S	10	●	027	7583805	31,10
SNMM190612-HU7	WPP20G	10	●	027	8138439	32,10
SNMM190612-HU7	WPP30G	10	●	027	8138438	32,10
SNMM190612-NRR	WPP30S	10	■	027	6160342[1]	32,10
SNMM190616-HU3	WPP10G	10	●	027	8138388	32,10
SNMM190616-HU3	WPP20G	10	●	027	8138390	32,10
SNMM190616-HU3	WPP30G	10	●	027	8138389	32,10
SNMM190616-HU5	WMP20S	10	●	027	7583862	31,10
SNMM190616-HU5	WPP20G	10	●	027	8116199	32,10
SNMM190616-HU5	WSM20S	10	■	027	7583806[1]	31,10
SNMM190616-HU5	WSM30S	10	●	027	7583807	31,10
SNMM190616-HU7	WPP20G	10	●	027	8138441	32,10
SNMM190616-HU7	WPP30G	10	●	027	8138440	32,10
SNMM190616-NR6	WPP20	10	■	027	5092547[1]	32,10
SNMM190616-NR6	WPP20G	10	●	027	8368238[1]	32,10
SNMM190616-NRF	WPP10S	10	●	027	6163757[2]	32,10
SNMM190624-HU3	WPP20G	10	●	027	8138391	32,10
SNMM190624-HU5	WPP20G	10	●	027	8116200	32,10
SNMM190624-HU5	WPP20S	10	■	027	7837150[1]	32,10
SNMM190624-HU7	WPP10G	10	●	027	8138443	32,10
SNMM190624-HU7	WPP20G	10	●	027	8138442	32,10
SNMM190624-HU7	WPP30G	10	●	027	8138444	32,10
SNMM190624-NRR	WAK30	10	●	027	5686373	31,10
SNMM190624-NRR	WPP10S	10	■	027	6160577[1]	32,10
SNMM190624-NRR	WPP20S	10	■	027	6160578[1]	32,10
SNMM250716-HU7	WPP20G	5	●	027	8138445	62,80
SNMM250724-HU3	WPP20G	5	●	027	8138392	62,80
SNMM250724-HU7	WPP20G	5	●	027	8138446	62,80
SNMM250724-HU7	WPP30G	5	●	027	8138447	62,80
SNMM250916-HU3	WPP20G	5	●	027	8138393	71,50
SNMM250924-HU3	WPP20G	5	●	027	8138394	71,50
SNMM250924-HU5	WMP20S	5	●	027	7583865	69,40
SNMM250924-HU5	WPP20G	5	●	027	8116201	71,50
SNMM250924-HU5	WSM20S	5	■	027	7583808[1]	69,40
SNMM250924-HU5	WSM30S	5	●	027	7583809	69,40
SNMM250924-HU7	WPP10G	5	●	027	8138448	71,50
SNMM250924-HU7	WPP20G	5	●	027	8138449	71,50
SNMM250924-HU7	WPP30G	5	●	027	8138450	71,50
SNMM250924-NRR	WPP10S	5	●	027	6160672[2]	71,50
SNMM250924-NRR	WPP30S	5	■	027	6160674[1]	71,50
SNMX090408-F27	WKP25S	10	●	004	7545098	17,27
SNMX090408-F27	WKP35G	10	■	004	7545099[1]	20,72
SNMX090408-F27	WKP35S	10	●	004	7677694	17,27
SNMX090408-F57	WKK25G	10	●	004	8284919	18,13
SNMX090408-F57	WKK25S	10	●	004	7545100	18,13
SNMX090408-F57	WKP25S	10	●	004	7545101	17,27
SNMX090408-F57	WKP35G	10	●	004	7545102	20,72
SNMX090408-F57	WKP35S	10	●	004	7677695	17,27
SNMX090408-F57	WSM35G	10	●	004	8441376	18,13
SNMX090408-F57	WSM35S	10	■	004	7545103[1]	18,13
SNMX090408-F57	WSP45G	10	●	004	7924344	18,14
SNMX090408-F67	WKP25S	10	■	004	7545105[1]	17,27
SNMX090408-F67	WKP35G	10	■	004	7545106[1]	20,72
SNMX090408-F67	WKP35S	10	■	004	7677696[1]	17,27
SNMX090408-F67	WSM35G	10	●	004	8285089	18,13
SNMX090408-F67	WSM35S	10	■	004	7545107[1]	18,13
SNMX090408-F67	WSP45G	10	●	004	7924345	18,14
SNMX0904ANN-F27	WKP25S	10	■	004	7544963[1]	17,27
SNMX0904ANN-F27	WKP35G	10	●	004	7544964	20,72
SNMX0904ANN-F27	WKP35S	10	■	004	7677698[1]	17,27
SNMX0904ANN-F57	WKK25G	10	●	004	8284917	18,13

Bezeichnung / Designation	Sorte / Grade	VE / US		Disc. Gr.	Article No.	EURO Stück / piece
SNMX0904ANN-F57	WKK25S	10	■	004	7544966*	18,13
SNMX0904ANN-F57	WKP25S	10	●	004	7544965	17,27
SNMX0904ANN-F57	WKP35G	10	●	004	7544967	20,72
SNMX0904ANN-F57	WKP35S	10	●	004	7677699	17,27
SNMX0904ANN-F57	WSM35G	10	●	004	8441373	18,13
SNMX0904ANN-F57	WSM35S	10	■	004	7544968*	18,13
SNMX0904ANN-F57	WSP45G	10	●	004	7924346	18,14
SNMX0904ANN-F67	WKP35G	10	■	004	7545072*	20,72
SNMX0904ANN-F67	WKP35S	10	■	004	7677700*	17,27
SNMX0904ANN-F67	WSM35G	10	●	004	8285090	18,13
SNMX0904ANN-F67	WSM35S	10	■	004	7545073*	18,13
SNMX0904ANN-F67	WSP45G	10	●	004	7924347	18,14
SNMX0904ZNN-F27	WKP25S	10	■	004	7545075*	17,27
SNMX0904ZNN-F27	WKP35G	10	●	004	7545076	20,72
SNMX0904ZNN-F27	WKP35S	10	■	004	7677675*	17,27
SNMX0904ZNN-F57	WKK25G	10	●	004	8284897	18,13
SNMX0904ZNN-F57	WKK25S	10	■	004	7545077*	18,13
SNMX0904ZNN-F57	WKP25S	10	●	004	7545078	17,27
SNMX0904ZNN-F57	WKP35G	10	●	004	7545079	20,72
SNMX0904ZNN-F57	WKP35S	10	●	004	7677676	17,27
SNMX0904ZNN-F57	WSM35G	10	●	004	8441379	18,13
SNMX0904ZNN-F57	WSM35S	10	■	004	7545090*	18,13
SNMX0904ZNN-F57	WSP45G	10	●	004	7924348	18,14
SNMX0904ZNN-F67	WAK15	10	●	004	7545094	17,27
SNMX0904ZNN-F67	WSM35G	10	●	004	8285091	18,13
SNMX0904ZNN-F67	WSP45G	10	●	004	7924349	18,14
SNMX120512-D27	WKK25G	10	●	004	8284852	21,16
SNMX120512-D27	WKK25S	10	●	004	6702109	21,16
SNMX120512-D27	WKP25S	10	●	004	6069192	20,15
SNMX120512-D27	WKP35G	10	●	004	7347415	24,16
SNMX120512-D27	WKP35S	10	●	004	5887112	20,15
SNMX120512-F27	WKP25S	10	●	004	6069197	20,15
SNMX120512-F27	WKP35G	10	●	004	7347416	24,16
SNMX120512-F27	WKP35S	10	●	004	5887113	20,15
SNMX120512-F57	WKK25G	10	●	004	8284863	21,16
SNMX120512-F57	WKK25S	10	●	004	6702110	21,16
SNMX120512-F57	WKP25S	10	●	004	6069198	20,15
SNMX120512-F57	WKP35G	10	●	004	7170605	24,16
SNMX120512-F57	WKP35S	10	●	004	5887115	20,15
SNMX120512-F57	WSM35G	10	●	004	8285092	21,16
SNMX120512-F57	WSM35S	10	●	004	7058556	21,16
SNMX120512-F57	WSP45G	10	●	004	7924350	21,16
SNMX120512-F67	WAK15	10	●	004	5101051	20,15
SNMX120512-F67	WKP25S	10	●	004	6069199	20,15
SNMX120512-F67	WKP35G	10	●	004	7347418	24,16
SNMX120512-F67	WKP35S	10	●	004	5887116	20,15
SNMX120512-F67	WSM35G	10	●	004	8285093	21,16
SNMX120512-F67	WSM35S	10	●	004	7058557	21,16
SNMX120512-F67	WSP45G	10	●	004	8112900	21,16
SNMX120520-D27	WKK25G	10	●	004	8284900	21,16
SNMX120520-D27	WKK25S	10	●	004	6702111	21,16
SNMX120520-D27	WKP25S	10	●	004	6069280	20,15
SNMX120520-D27	WKP35G	10	●	004	7347419	24,16
SNMX120520-D27	WKP35S	10	●	004	5887117	20,15
SNMX120520-F57	WKK25G	10	●	004	8284864	21,16
SNMX120520-F57	WKK25S	10	●	004	6702112	21,16
SNMX120520-F57	WKP25S	10	●	004	6069281	20,15
SNMX120520-F57	WKP35G	10	●	004	7170557	24,16
SNMX120520-F57	WKP35S	10	●	004	5887118	20,15
SNMX120520-F57	WSM35G	10	●	004	8285094	21,16
SNMX120520-F57	WSM35S	10	●	004	7058558	21,16
SNMX120520-F57	WSP45G	10	●	004	7924351	21,16
SNMX1205ANN-F27	WKP25S	10	●	004	6069283	20,15
SNMX1205ANN-F27	WKP35G	10	●	004	7347420	24,16
SNMX1205ANN-F27	WKP35S	10	●	004	5887119	20,15
SNMX1205ANN-F57	WKK25G	10	●	004	8284858	21,16
SNMX1205ANN-F57	WKK25S	10	■	004	6702113*	21,16
SNMX1205ANN-F57	WKP25S	10	●	004	6069284	20,15
SNMX1205ANN-F57	WKP35G	10	●	004	7170612	24,16
SNMX1205ANN-F57	WKP35S	10	●	004	5887130	20,15

Bezeichnung / Designation	Sorte / Grade	VE / US		Disc. Gr.	Article No.	EURO Stück / piece
SNMX1205ANN-F67	WAK15	10	●	004	5040475	20,15
SNMX1205ANN-F67	WKP25S	10	●	004	6069285	20,15
SNMX1205ANN-F67	WKP35G	10	●	004	7347421	24,16
SNMX1205ANN-F67	WKP35S	10	●	004	5887131	20,15
SNMX1205ENN-F57	WKP25S	10	●	004	8242008	20,15
SNMX1205ENN-F57	WKP35G	10	●	004	8242009	24,16
SNMX1205ZNN-F57	WKK25G	10	●	004	8284898	21,16
SNMX1205ZNN-F57	WKK25S	10	●	004	7545145	21,16
SNMX1205ZNN-F57	WKP25S	10	●	004	7545146	20,15
SNMX1205ZNN-F57	WKP35G	10	●	004	7545147	24,16
SNMX1205ZNN-F57	WKP35S	10	●	004	7677692	20,15
SNMX160620-F27	WKP35S	10	●	004	5887133	23,69
SNMX160620-F57	WKP25S	10	●	004	6069288	23,69
SNMX160620-F57	WKP35S	10	●	004	5887134	23,69
SNMX160620-F57	WSP45G	10	●	004	8112901	24,88
SNMX160640-F57	WKP35S	10	●	004	5887138	23,69
SNMX160640-F57	WSP45G	10	●	004	8112902	24,88
SNNN150412	WPM	10	●	009	5002082	15,46
SPEB090308-A67	WSM35G	10	●	009	8441362	19,20
SPEB090308-A67	WSM35S	10	●	009	7469961	19,20
SPEB090308-A67	WSP45G	10	●	009	8201937	19,22
SPEB090308-A67	WSP45S	10	■	009	7469962*	19,22
SPEB090308-A88	WKM	10	●	009	7469963	14,63
SPEB120308-A67	WSP45G	10	●	009	8201938	26,40
SPEB120308-A67	WSP45S	10	■	009	7469964*	26,40
SPEB150408-A67	WSP45G	10	●	009	8201939	35,00
SPEB150408-A67	WSP45S	10	■	009	7469965*	35,00
SPFN1203EDR	WKM	10	●	009	5002100	21,90
SPFN1204EDN	WKP25S	10	●	009	7028056	21,52
SPFR1204ZPN	WKP35S	10	●	009	5917807	23,56
SPGT09T304-MK4	WKK20S	10	●	029	6363518	20,39
SPGT09T304-MM4	WSM20S	10	●	029	6844695	20,39
SPGT09T308-MK4	WKK20S	10	●	029	6363548	20,39
SPGT09T308-MM4	WSM20S	10	●	029	6844696	20,39
SPGT1204AEN-K88	WK10	10	●	009	5004793	16,43
SPGT1204AEN-K88	WXN15	10	●	009	5021585	20,54
SPGT1204EDR-F55	WAK15	10	●	009	5015841	20,54
SPGT1204EDR-F55	WKP35S	10	●	009	5917809	20,54
SPGT1204EDR-F55	WSM35G	10	●	009	8441393	21,57
SPGT1204EDR-F55	WSM35S	10	●	009	7058559	21,57
SPGT1204EDR-F55	WSP45G	10	●	009	8201940	21,57
SPGT1204EDR-F55	WSP45S	10	■	009	7057784*	21,57
SPGT120606-F57	WSM35G	10	●	009	8285095	23,71
SPGT120606-F57	WSM35S	10	■	009	6161609*	23,71
SPGT120606-F57	WSP45G	10	●	009	8112903	23,70
SPGW09T308FS-1	WDN10	2	●	025	7132682	68,60
SPHT060304-G88	WK10	10	●	009	5169035	15,87
SPHT060304-G88	WXN15	10	●	009	5169050	19,79
SPHT09T308-G88	WK10	10	●	009	5169036	19,79
SPHT09T308-G88	WXN15	10	●	009	5169051	23,90
SPHT120408-G88	WK10	10	●	009	5169037	22,61
SPHT120408-G88	WXN15	10	●	009	5169052	28,40
SPHW120412-A57	WSN10	10	■	007	5004120*	36,80
SPHW120416-A57	WSN10	10	■	007	5004116*	36,80
SPHW1204EDR-A88	WCD10	1	●	006	5004058	116,00
SPHW1204PDR-A88	WCD10	1	●	006	5004057	116,00
SPHX1204PDR-A88	WCD10	1	●	006	5004059	126,00
SPJW1204EDR	WAK15	10	●	009	5040237	18,62
SPJW1204EDR	WKM	10	●	009	5004579	13,79
SPJW1204EDR	WKP25S	10	●	009	7028060	18,62
SPJW1204EDR	WKP35S	10	●	009	5917873	18,62
SPJW1204EDR	WPM	10	●	009	5004580	13,79
SPKN1203EDR	WKP35S	10	●	009	5917875	17,32
SPKN1204EDR	WKP35S	10	●	009	5917876	21,62
SPKN1504EDR	WKP35S	10	●	009	5917877	26,10
SPKT1204AZN	WAK15	10	●	009	5015301	18,97
SPKT1204AZN	WKP25S	10	●	009	7028064	18,97
SPKT1204AZN	WKP35S	10	●	009	5917878	18,97
SPKT1204AZN	WSM35G	10	●	009	8285096	19,92
SPKT1204AZN	WSM35S	10	■	009	7058560*	19,92

Bezeichnung / Designation	Sorte / Grade	VE / US		Disc. Gr.	Article No.	EURO Stück / piece
SPKT1204AZN	WSP45G	10	●	009	8112904	19,92
SPKT1504AZN	WKP35S	10	●	009	5917879	27,20
SPMT060304-D51	WKP25S	10	●	009	6069442	10,31
SPMT060304-D51	WKP35S	10	●	009	5917891	10,31
SPMT060304-D51	WSM35G	10	●	009	8285097	10,83
SPMT060304-D51	WSM35S	10	■	009	7058561*	10,83
SPMT060304-D51	WSP45G	10	●	009	8112905	10,83
SPMT060304-F55	WAK15	10	●	009	5015844	10,31
SPMT060304-F55	WKP25S	10	●	009	7028066	10,31
SPMT060304-F55	WKP35G	10	●	009	7347432	12,36
SPMT060304-F55	WKP35S	10	●	009	5917893	10,31
SPMT060304-F55	WSM35G	10	●	009	8285098	10,83
SPMT060304-F55	WSM35S	10	■	009	7058562*	10,83
SPMT060304-F55	WSP45G	10	●	009	7924352	10,83
SPMT09T304-MK4	WKK20S	10	●	029	6486992	11,31
SPMT09T304-MM4	WSM20S	10	●	029	6837329	11,31
SPMT09T304-MP4	WPP20G	10	●	029	8204957	11,65
SPMT09T308-D51	WKP25S	10	●	009	6069443	12,55
SPMT09T308-D51	WKP35S	10	●	009	5917894	12,55
SPMT09T308-D51	WSM35G	10	●	009	8285099	13,18
SPMT09T308-D51	WSM35S	10	■	009	7058563*	13,18
SPMT09T308-D51	WSP45G	10	●	009	8112906	13,18
SPMT09T308-F55	WAK15	10	●	009	5015845	12,55
SPMT09T308-F55	WKP25S	10	●	009	7028067	12,55
SPMT09T308-F55	WKP35G	10	●	009	7347433	15,06
SPMT09T308-F55	WKP35S	10	●	009	5917895	12,55
SPMT09T308-F55	WSM35G	10	●	009	8285100	13,18
SPMT09T308-F55	WSM35S	10	■	009	7058564*	13,18
SPMT09T308-F55	WSP45G	10	●	009	7924353	13,18
SPMT09T308-MK4	WKK20S	10	●	029	6487454	11,72
SPMT09T308-MM4	WSM20S	10	●	029	6837380	11,72
SPMT09T308-MP4	WPP20G	10	●	029	8204958	12,07
SPMT120408-D51	WKP25S	10	●	009	6069444	14,98
SPMT120408-D51	WKP35S	10	●	009	5917896	14,98
SPMT120408-D51	WSM35G	10	●	009	8285101	15,74
SPMT120408-D51	WSM35S	10	■	009	7058565*	15,74
SPMT120408-D51	WSP45G	10	●	009	8112907	15,74
SPMT120408-F55	WAK15	10	●	009	5015846	14,98
SPMT120408-F55	WKP25S	10	●	009	7028068	14,98
SPMT120408-F55	WKP35G	10	●	009	7347434	17,99
SPMT120408-F55	WKP35S	10	●	009	5917897	14,98
SPMT120408-F55	WSM35G	10	●	009	8285102	15,74
SPMT120408-F55	WSM35S	10	■	009	7058566*	15,74
SPMT120408-F55	WSP45G	10	●	009	7924354	15,74
SPMT1204AEN	WAK15	10	●	009	5015847	14,98
SPMT1204AEN	WKP25S	10	●	009	6069445	14,98
SPMT1204AEN	WKP35S	10	●	009	5917898	14,98
SPMT1204AEN	WSP45G	10	●	009	8201941	15,74
SPMT1204AEN	WSP45S	10	■	009	7057792*	15,74
SPMT120606-D51	WKP35S	10	●	009	5917899	18,10
SPMT120606-D51	WSP45G	10	●	009	8112908	19,01
SPMT120606-D57	WKP25S	10	●	009	6069446	18,10
SPMT120606-D57	WKP35S	10	●	009	5917920	18,10
SPMT120606-D57	WSP45G	10	●	009	8112909	19,01
SPMW060304-A57	WAK15	10	●	009	5015849	9,26
SPMW060304-A57	WKP25S	10	●	009	6069447	9,26
SPMW060304T-A27	WKP35S	10	●	009	5917922	9,26
SPMW070308-A67	WKP25S	10	●	009	7469966	9,95
SPMW070308-A88	WKM	10	●	009	7469967	7,97
SPMW09T308-A57	WAK15	10	●	009	5015850	11,42
SPMW09T308-A57	WKP25S	10	●	009	6069449	11,42
SPMW09T308-A57	WKP35S	10	●	009	5917923	11,42
SPMW09T308-RK6	WKK20S	10	●	029	7021367	11,72
SPMW09T308-RK6	WSM01	10	●	029	7469034	11,67
SPMW09T308T-A27	WKP25S	10	●	009	6069460	11,42
SPMW09T308T-A27	WKP35S	10	●	009	5917924	11,42
SPMW120408-A57	WAK15	10	●	009	5015851	13,63
SPMW120408-A57	WKP25S	10	●	009	6069461	13,63
SPMW120408-A57	WKP35S	10	●	009	5917926	13,63
SPMW120408-A57	WPM	10	●	009	5004943	10,39

Bezeichnung / Designation	Sorte / Grade	VE / US		Disc. Gr.	Article No.	EURO Stück / piece
SPMW120408-RK6	WKK20S	10	●	029	7021368	16,18
SPMW120408T-A27	WKP25S	10	●	009	6069462	13,63
SPMW120408T-A27	WKP35S	10	●	009	5917927	13,63
SPMW1204AEN-A57	WKP35S	10	●	009	5917928	13,63
SPMW120606T-A27	WKP35S	10	●	009	5917960	16,41
SPNN120308	WPM	10	●	009	5002096	8,45
SPNT060304	WKM	10	●	009	5004707	8,18
SPNT060304	WTL71	10	●	009	5005017	10,57
SRACL162D		1	●	060	5523317	114,00
SRACL163D		1	●	060	5523315	114,00
SRACL164D		1	●	060	5523313	114,00
SRACL204D		1	●	060	6347117	122,00
SRACR162D		1	●	060	5523318	114,00
SRACR163D		1	●	060	5523316	114,00
SRACR164D		1	●	060	5523314	114,00
SRACR204D		1	●	060	6347119	122,00
SRDCN082		1	●	060	5523036	96,80
SRDCN103		1	●	060	5523035	96,80
SRDCN1212F06		1	●	060	5008050	96,80
SRDCN123B		1	●	060	6347301	94,10
SRDCN1616H08		1	●	060	5008051	96,80
SRDCN163D		1	●	060	6347302	111,00
SRDCN164D		1	●	060	6347307	111,00
SRDCN2020K06		1	●	060	5008836	108,00
SRDCN2020K08		1	●	060	5008837	108,00
SRDCN2020K10		1	●	060	5335815	108,00
SRDCN2020K12		1	●	060	5335817	108,00
SRDCN204D		1	●	060	6347308	122,00
SRDCN2525M06		1	●	060	5008838	114,00
SRDCN2525M08		1	●	060	5008839	114,00
SRDCN2525M10		1	●	060	5335816	114,00
SRDCN2525M12		1	●	060	5335818	114,00
SRDCN3225P12		1	●	060	5335819	126,00
SRDCN3225P16		1	●	060	5335820	126,00
SRGCL164C		1	●	060	5523037	114,00
SRGCR164C		1	●	060	5523273	114,00
SRSCL162D		1	●	060	5523311	114,00
SRSCL163D		1	●	060	5523279	114,00
SRSCL164D		1	●	060	5523277	114,00
SRSCL2020K06		1	●	060	5335822	108,00
SRSCL2020K08		1	●	060	5335827	108,00
SRSCL2020K10		1	●	060	5335831	108,00
SRSCL2020K12		1	●	060	5335836	108,00
SRSCL2525M06		1	●	060	5335824	114,00
SRSCL2525M08		1	●	060	5335829	114,00
SRSCL2525M10		1	●	060	5335834	114,00
SRSCL2525M12		1	●	060	5335838	114,00
SRSCL3225P12		1	●	060	5335840	126,00
SRSCL3225P16		1	●	060	5335842	126,00
SRSCR162D		1	●	060	5523312	114,00
SRSCR163D		1	●	060	5523310	114,00
SRSCR164D		1	●	060	5523278	114,00
SRSCR2020K06		1	●	060	5335823	108,00
SRSCR2020K08		1	●	060	5335828	108,00
SRSCR2020K10		1	●	060	5335833	108,00
SRSCR2020K12		1	●	060	5335837	108,00
SRSCR2525M06		1	●	060	5335826	114,00
SRSCR2525M08		1	●	060	5335830	114,00
SRSCR2525M10		1	●	060	5335835	114,00
SRSCR2525M12		1	●	060	5335839	114,00
SRSCR3225P12		1	●	060	5335841	126,00
SRSCR3225P16		1	●	060	5335843	126,00
SSDCL1616H09		1	●	060	5327619	96,80
SSDCL2020K09		1	●	060	5327621	108,00
SSDCL2020K12		1	●	060	5327623	108,00
SSDCL2525M12		1	●	060	5327625	114,00
SSDCN062		1	●	060	6347620	94,10
SSDCN082B		1	●	060	6347621	94,10
SSDCN1212F09		1	●	060	5327627	96,80
SSDCN1616H09		1	●	060	5327628	96,80

Bezeichnung / Designation	Sorte / Grade	VE / US		Disc. Gr.	Article No.	EURO Stück / piece
SSDCN2020K12		1	●	060	5335848	108,00
SSDCN2525M12		1	●	060	5335849	114,00
SSDCR1616H09		1	●	060	5327620	96,80
SSDCR2020K09		1	●	060	5327622	108,00
SSDCR2020K12		1	●	060	5327624	108,00
SSDCR2525M12		1	●	060	5327626	114,00
SSKCR10CA-09		1	●	060	5009049	167,00
SSR-100D-F2010		1	●	095	5006902	18,57
SSR-125D-F2010		1	●	095	5006896	19,46
SSR-160D-F2010		1	●	095	5006897	19,78
SSR-200D-F2010		1	●	095	5006898	32,20
SSR-250D-F2010		1	●	095	5006899	35,50
SSR-315D-F2010		1	●	095	5006900	102,00
SSR-80D-F2010		1	●	095	5006901	18,57
SSRCR10CA-09		1	●	060	5009051	167,00
SSSCR10CA-09		1	●	060	5009053	167,00
STFCR08CA-09		1	●	060	7583225	167,00
STFCR10CA-11		1	●	060	5009055	167,00
STGCL1212F11		1	●	060	5335850	96,80
STGCL1616H16		1	●	060	5327629	96,80
STGCL2020K16		1	●	060	5327631	108,00
STGCL2525M16		1	●	060	5327633	114,00
STGCR1212F11		1	●	060	5335851	96,80
STGCR1616H16		1	●	060	5327630	96,80
STGCR2020K16		1	●	060	5327632	108,00
STGCR2525M16		1	●	060	5327634	114,00
SVHBL1616H11		1	●	060	5335852	114,00
SVHBL2020K11		1	●	060	5335854	129,00
SVHBL2020K16		1	●	060	5327635	129,00
SVHBL2525M11		1	●	060	5335856	139,00
SVHBL2525M16		1	●	060	5327637	139,00
SVHBL3225P16		1	●	060	5327639	146,00
SVHBR1616H11		1	●	060	5335853	114,00
SVHBR2020K11		1	●	060	5335855	129,00
SVHBR2020K16		1	●	060	5327636	129,00
SVHBR2525M11		1	●	060	5335858	139,00
SVHBR2525M16		1	●	060	5327638	139,00
SVHBR3225P16		1	●	060	5327640	146,00
SVJBL1212F11		1	●	060	5327102	114,00
SVJBL1212J11-S-P		1	●	060	8338211	212,00
SVJBL1616H11		1	●	060	5327104	114,00
SVJBL1616H16		1	●	060	5335859	114,00
SVJBL1616X11-S-P		1	●	060	8338213	212,00
SVJBL2020K11		1	●	060	5327106	129,00
SVJBL2020K16		1	●	060	5327641	129,00
SVJBL2525M11		1	●	060	5327108	139,00
SVJBL2525M16		1	●	060	5327643	139,00
SVJBL3225P16		1	●	060	5327645	146,00
SVJBR1212F11		1	●	060	5327103	114,00
SVJBR1212J11-S-P		1	●	060	8338210	212,00
SVJBR1616H11		1	●	060	5327105	114,00
SVJBR1616H16		1	●	060	5335860	114,00
SVJBR1616X11-S-P		1	●	060	8338212	212,00
SVJBR2020K11		1	●	060	5327107	129,00
SVJBR2020K16		1	●	060	5327642	129,00
SVJBR2525M11		1	●	060	5327109	139,00
SVJBR2525M16		1	●	060	5327644	139,00
SVJBR3225P16		1	●	060	5327646	146,00
SVVBN1212F11		1	●	060	5327130	114,00
SVVBN1616H11		1	●	060	5327131	114,00
SVVBN2020K11		1	●	060	5327132	129,00
SVVBN2020K16		1	●	060	5327647	129,00
SVVBN2525M11		1	●	060	5327133	139,00
SVVBN2525M16		1	●	060	5327648	139,00
SVVBN3225P16		1	●	060	5327649	146,00
SW2 DIN911		1	●	095	5008432	3,88
SW2,5 DIN911		1	●	095	5008721	3,88
SW3 DIN911		1	●	095	5008433	3,88
SW4 DIN911		1	●	095	5008719	3,88
SW5 DIN 911		1	●	095	5008717	3,88

Bezeichnung / Designation	Sorte / Grade	VE / US		Disc. Gr.	Article No.	EURO Stück / piece
SW6 DIN911		1	●	095	5008718	3,88
SWFCR10CA-06		1	●	060	5007881	167,00
SWLCL1212F04		1	●	060	5335862	96,80
SWLCL1616H04		1	●	060	5335864	96,80
SWLCL1616H06		1	●	060	5335869	96,80
SWLCL2020K06		1	●	060	5335871	108,00
SWLCL2020K08		1	●	060	5335875	108,00
SWLCL2525M06		1	●	060	5335873	114,00
SWLCL2525M08		1	●	060	5335876	114,00
SWLCR1212F04		1	●	060	5335861	96,80
SWLCR1616H04		1	●	060	5335863	96,80
SWLCR1616H06		1	●	060	5335868	96,80
SWLCR2020K06		1	●	060	5335870	108,00
SWLCR2020K08		1	●	060	5335874	108,00
SWLCR2525M06		1	●	060	5335872	114,00
SWLCR2525M08		1	●	060	5335877	114,00
SX-10E1000N08-CE4	WSM33G	5	●	020	8492619	29,30
SX-10E1000N08-CE4	WSM33S	5	●	020	6572444	28,50
SX-1E150N01-CE4	WSM33G	10	●	020	8492890	13,43
SX-1E150N01-CE4	WSM33S	10	●	020	6427067	13,10
SX-1E150N01-CF5	WSM33G	10	●	020	8492891	13,43
SX-1E150N01-CF5	WSM33S	10	●	020	6646157	13,10
SX-1E150N01-SF5	WSM33G	10	●	020	8492892	13,43
SX-1E150N01-SF5	WSM33S	10	●	020	6393132	13,10
SX-1E150N01-SK8	WK1	10	●	020	7053491	12,84
SX-2E200L6-CF5	WSM33S	10	■	020	6572463*	13,80
SX-2E200N02-CE4	WKP23S	10	●	020	6572478	13,80
SX-2E200N02-CE4	WSM23S	10	●	020	6737585	13,80
SX-2E200N02-CE4	WSM33G	10	●	020	8492893	14,15
SX-2E200N02-CE4	WSM33S	10	●	020	6427069	13,80
SX-2E200N02-CE4	WSM43S	10	●	020	6427091	13,80
SX-2E200N02-CF5	WSM33G	10	●	020	8492894	14,15
SX-2E200N02-CF5	WSM33S	10	●	020	6646159	13,80
SX-2E200N02-CF5	WSM43S	10	●	020	6646220	13,80
SX-2E200N02-CF6	WSM33G	10	●	020	8492895	14,15
SX-2E200N02-CF6	WSM33S	10	●	020	6422255	13,80
SX-2E200N02-CF6	WSM43S	10	●	020	6422259	13,80
SX-2E200N02-CK8	WK1	10	●	020	7169770	13,47
SX-2E200N02-SF5	WSM33G	10	●	020	8492896	14,15
SX-2E200N02-SF5	WSM33S	10	●	020	6422456	13,80
SX-2E200N02-SF5	WSM43S	10	●	020	6422457	13,80
SX-2E200N02-SK8	WK1	10	●	020	6572481	10,37
SX-2E200R6-CE4	WSM33G	10	●	020	8492897	14,15
SX-2E200R6-CE4	WSM33S	10	●	020	6572446	13,80
SX-2E200R6-CF5	WSM33G	10	●	020	8492898	14,15
SX-2E200R6-CF5	WSM33S	10	●	020	6572458	13,80
SX-2E260N03-CE4	WSM23S	10	■	020	6913043*	13,80
SX-2E260N03-CE4	WSM33G	10	●	020	8492899	14,15
SX-2E260N03-CE4	WSM33S	10	●	020	6913041	13,80
SX-3E300L6-CE4	WKP23S	10	■	020	6913054*	15,31
SX-3E300L6-CE4	WSM33G	10	●	020	8492900	15,69
SX-3E300L6-CE4	WSM33S	10	●	020	6572453	15,31
SX-3E300L6-CF5	WSM33G	10	●	020	8492901	15,69
SX-3E300L6-CF5	WSM33S	10	●	020	6572464	15,31
SX-3E300L6-CF5	WSM43S	10	●	020	6572409	15,31
SX-3E300N02-CE4	WKP23S	10	●	020	6572479	15,31
SX-3E300N02-CE4	WSM23S	10	●	020	6737586	15,31
SX-3E300N02-CE4	WSM33G	10	●	020	8485143	15,69
SX-3E300N02-CE4	WSM33S	10	●	020	6393136	15,31
SX-3E300N02-CE4	WSM43S	10	●	020	6427093	15,31
SX-3E300N02-CF5	WSM23S	10	●	020	6913044	15,31
SX-3E300N02-CF5	WSM33G	10	●	020	8492902	15,69
SX-3E300N02-CF5	WSM33S	10	●	020	6646221	15,31
SX-3E300N02-CF5	WSM43S	10	●	020	6646222	15,31
SX-3E300N02-CF6	WSM33G	10	●	020	8492903	15,69
SX-3E300N02-CF6	WSM33S	10	●	020	6422301	15,31
SX-3E300N02-CF6	WSM43S	10	●	020	6422302	15,31
SX-3E300N02-CK8	WK1	10	●	020	7169771	14,93
SX-3E300N02-SF5	WSM33G	10	●	020	8492904	15,69
SX-3E300N02-SF5	WSM33S	10	●	020	6422459	15,31

Bezeichnung / Designation	Sorte / Grade	VE / US		Disc. Gr.	Article No.	EURO Stück / piece
SX-3E300N02-SF5	WSM43S	10	●	020	6422500	15,31
SX-3E300N02-SK8	WK1	10	●	020	6572482	11,47
SX-3E300R15-CF5	WSM33G	10	●	020	8492905	15,69
SX-3E300R15-CF5	WSM33S	10	●	020	6769608	15,31
SX-3E300R6-CE4	WKP23S	10	●	020	6913053	15,31
SX-3E300R6-CE4	WSM33G	10	●	020	8492906	15,69
SX-3E300R6-CE4	WSM33S	10	●	020	6572447	15,31
SX-3E300R6-CE4	WSM43S	10	●	020	6572391	15,31
SX-3E300R6-CF5	WSM33G	10	●	020	8492907	15,69
SX-3E300R6-CF5	WSM33S	10	●	020	6572459	15,31
SX-3E300R6-CF5	WSM43S	10	●	020	6572404	15,31
SX-3E310N03-CE4	WSM33G	10	●	020	8492908	15,69
SX-3E310N03-CE4	WSM33S	10	●	020	6913045	15,31
SX-3E310N03-CE4	WSM43S	10	●	020	6913046	15,31
SX-3E310N03-CF5	WSM33G	10	●	020	8492909	15,69
SX-3E310N03-CF5	WSM33S	10	●	020	6938494	15,31
SX-3E310N03-CF5	WSM43S	10	●	020	6938495	15,31
SX-4E400L6-CE4	WSM33G	10	●	020	8492910	16,60
SX-4E400L6-CE4	WSM33S	10	●	020	6572454	16,20
SX-4E400L6-CF5	WSM33G	10	●	020	8492911	16,60
SX-4E400L6-CF5	WSM33S	10	●	020	6572465	16,20
SX-4E400N02-CE4	WKP23S	10	●	020	6572480	16,20
SX-4E400N02-CE4	WSM23S	10	●	020	6737587	16,20
SX-4E400N02-CE4	WSM33G	10	●	020	8485144	16,60
SX-4E400N02-CE4	WSM33S	10	●	020	6427095	16,20
SX-4E400N02-CE4	WSM43S	10	●	020	6427097	16,20
SX-4E400N02-CF5	WSM33G	10	●	020	8492912	16,60
SX-4E400N02-CF5	WSM33S	10	●	020	6646223	16,20
SX-4E400N02-CF5	WSM43S	10	●	020	6646224	16,20
SX-4E400N02-CK8	WK1	10	●	020	7036968	15,83
SX-4E400N02-SF5	WSM33G	10	●	020	8492913	16,60
SX-4E400N02-SF5	WSM33S	10	●	020	6422501	16,20
SX-4E400N02-SF5	WSM43S	10	●	020	6393134	16,20
SX-4E400N02-SK8	WK1	10	●	020	6572483	12,17
SX-4E400R6-CE4	WSM33G	10	●	020	8492914	16,60
SX-4E400R6-CE4	WSM33S	10	●	020	6572448	16,20
SX-4E400R6-CE4	WSM43S	10	●	020	6572392	16,20
SX-4E400R6-CF5	WSM33G	10	●	020	8492915	16,60
SX-4E400R6-CF5	WSM33S	10	●	020	6572460	16,20
SX-4E410N03-CE4	WSM33G	10	●	020	8492916	16,60
SX-4E410N03-CE4	WSM33S	10	●	020	6913048	16,20
SX-4E480N03-CE4	WSM33G	10	●	020	8492917	17,41
SX-4E480N03-CE4	WSM33S	10	●	020	6913051	17,00
SX-5E500L6-CE4	WSM33S	10	■	020	6572455*	17,00
SX-5E500N04-CE4	WKP23S	10	●	020	6677510	17,00
SX-5E500N04-CE4	WSM33G	10	●	020	8492918	17,41
SX-5E500N04-CE4	WSM33S	10	●	020	6427098	17,00
SX-5E500N04-CE4	WSM43S	10	●	020	6427099	17,00
SX-5E500N04-CF5	WSM33G	10	●	020	8492919	17,41
SX-5E500N04-CF5	WSM33S	10	●	020	6646225	17,00
SX-5E500N04-CF5	WSM43S	10	●	020	6646226	17,00
SX-5E500N04-CK8	WK1	10	●	020	7036969	16,59
SX-5E500N04-SF5	WSM33G	10	●	020	8492920	17,41
SX-5E500N04-SF5	WSM33S	10	●	020	6423143	17,00
SX-5E500N04-SF5	WSM43S	10	●	020	6423144	17,00
SX-5E500N04-SK8	WK1	10	●	020	7053492	16,59
SX-5E500R6-CE4	WSM33G	10	●	020	8492921	17,41
SX-5E500R6-CE4	WSM33S	10	●	020	6572449	17,00
SX-6E600L6-CE4	WSM33G	10	●	020	8492922	18,41
SX-6E600L6-CE4	WSM33S	10	●	020	6572456	17,98
SX-6E600N04-CE4	WKP23S	10	●	020	6677511	17,97
SX-6E600N04-CE4	WSM33G	10	●	020	8492923	18,42
SX-6E600N04-CE4	WSM33S	10	●	020	6427111	17,97
SX-6E600N04-CE4	WSM43S	10	●	020	6427112	17,97
SX-6E600N04-CF5	WSM33G	10	●	020	8492924	18,42
SX-6E600N04-CF5	WSM33S	10	●	020	6423147	17,97
SX-6E600N04-CF5	WSM43S	10	●	020	6423148	17,97
SX-6E600R6-CE4	WSM33G	10	●	020	8492925	18,41
SX-6E600R6-CE4	WSM33S	10	●	020	6572450	17,98
SX-8E800N08-CE4	WKP23S	5	●	020	6677512	23,33

Bezeichnung / Designation	Sorte / Grade	VE / US		Disc. Gr.	Article No.	EURO Stück / piece
SX-8E800N08-CE4	WSM33G	10	●	020	8492926	23,88
SX-8E800N08-CE4	WSM33S	5	●	020	6572443	23,33
SX-8E800N08-CE4	WSM43S	5	■	020	6572387*	23,33
SX-8E800N08-UF4	WKP23S	5	●	020	7037003	23,33
SX-8E800N08-UF4	WSM33G	5	●	020	8485145	23,88
SX-8E800N08-UF4	WSM33S	5	●	020	7037001	23,33
SX-8E800N08-UF4	WSM43S	5	■	020	7037002*	23,33
T0192106-2.5X3	TICN	1	●	TII	5115636	114,00
T0192106-3.0X4	TICN	1	●	TII	5115637	167,00
T1192206-3.5X5	TICN	1	●	TII	5115648	209,00
T1192206-4.0X5	TICN	1	●	TII	5115647	209,00
T1192206-4.5X5	TICN	1	●	TII	5115646	209,00
T1291206-1.0X3	TICN	1	●	TII	5115641	114,00
T1291206-1.5X3	TICN	1	●	TII	5115639	114,00
T1291206-1.5X5	TICN	1	●	TII	5115638	209,00
T1291206-2.0X3	TICN	1	●	TII	5115650	114,00
T1291206-2.0X5	TICN	1	●	TII	5115651	209,00
T1291206-3.0X5	TICN	1	●	TII	5115652	209,00
T1820-Q25L-16I-P		1	●	060	7965730	425,00
T1820-Q25R-16I-P		1	●	060	7965699	425,00
T1820-Q32L-16I-P		1	●	060	7965732	475,00
T1820-Q32L-22I-P		1	●	060	7965738	475,00
T1820-Q32R-16I-P		1	●	060	7965731	475,00
T1820-Q32R-22I-P		1	●	060	7965737	475,00
T1820-Q40L-16I-P		1	●	060	7965734	500,00
T1820-Q40L-22I-P		1	●	060	7965740	500,00
T1820-Q40R-16I-P		1	●	060	7965733	500,00
T1820-Q40R-22I-P		1	●	060	7965739	500,00
T1820-Q50L-16I-P		1	●	060	7965736	525,00
T1820-Q50L-22I-P		1	●	060	7965742	525,00
T1820-Q50R-16I-P		1	●	060	7965735	525,00
T1820-Q50R-22I-P		1	●	060	7965741	525,00
T2710-17-W16-3-06-2-15		1	●	TIB	7976694	369,00
T2710-18-W16-3-06-2-11.3		1	●	TIB	7979206	404,00
T2710-19-W20-3-06-3-12		1	●	TIB	7976695	502,00
T2710-20-W20-3-06-3-12.7		1	●	TIB	7979207	502,00
T2710-24-W25-3-09-3-14		1	●	TIB	7976696	596,00
T2710-26-W25-3-09-3-12.7		1	●	TIB	7979208	596,00
T2710-29-W32-3-09-3-16		1	●	TIB	7976697	680,00
T2710-31-W32-3-09-3-19.1		1	●	TIB	7979209	680,00
T2710-35-W32-3-11-3-18		1	●	TIB	7976698	751,00
T2710-40-W40-3-14-3-20		1	●	TIB	7976699	902,00
T2710-43-W40-4-09-3-25.4		1	●	TIB	7979240	993,00
T2710-44-W40-3-14-3-22		1	●	TIB	7976720	984,00
T2710-52-W40-4-14-3-24		1	●	TIB	7976721	1.173,00
T2711-13-W16-1-06		1	●	TIB	7976722	255,00
T2711-15-W16-2-06		1	●	TIB	7976723	293,00
T2711-16-W16-2-06		1	●	TIB	7976728	271,00
T2711-17-W16-3-06-2-20		1	●	TIB	7951687	393,00
T2711-18-W16-3-06-2-25.4		1	●	TIB	7951688	430,00
T2711-19-W20-3-06-2-24		1	●	TIB	6953362	465,00
T2711-20-W20-3-06-2-25.4		1	●	TIB	7020617	465,00
T2711-24-W25-3-09-2-31.5		1	●	TIB	7013085	546,00
T2711-26-W25-3-09-2-32.7		1	●	TIB	7020618	546,00
T2711-29-W32-3-09-3-24		1	●	TIB	6953363	764,00
T2711-31-W32-3-09-3-25.4		1	●	TIB	7020619	764,00
T2711-35-W32-3-11-3-27		1	●	TIB	7020614	877,00
T2711-40-W40-3-14-3-30		1	●	TIB	7013086	997,00
T2711-44-W40-3-14-3-33		1	●	TIB	7356300	1.045,00
T2711-52-W40-4-14-2-60		1	●	TIB	7356301	1.093,00
T2711.20-W19-3-06-2-25.4		1	●	TIB	7020740	465,00
T2711.26-W26-3-09-2-32.7		1	●	TIB	7020741	546,00
T2711.31-W31-3-09-3-25.4		1	●	TIB	7020742	764,00
T2712-13-W16-1-06		1	●	TIB	7976724	293,00
T2712-17-W16-3-06		1	●	TIB	7976725	323,00
T2712-19-W20-3-06		1	●	TIB	7013087	381,00
T2712-24-W25-3-09		1	●	TIB	7493639	467,00
T2712-24-W25-3-09-2-31.5		1	●	TIB	7013088	601,00
T2712-26-W25-3-09-2-32.7		1	●	TIB	7493795	601,00
T2712-29-W32-3-09		1	●	TIB	7493790	537,00

Bezeichnung / Designation	Sorte / Grade	VE / US		Disc. Gr.	Article No.	EURO Stück / piece
T2712-29-W32-3-09-2-36		1	●	TIB	7013089	692,00
T2712-31-W32-3-09-2-38.1		1	●	TIB	7493796	692,00
T2712-35-W32-3-11		1	●	TIB	7493791	613,00
T2712-35-W32-3-11-2-40.5		1	●	TIB	7020615	789,00
T2712-40-W40-3-14		1	●	TIB	7493792	693,00
T2712-40-W40-3-14-2-50		1	●	TIB	7013110	893,00
T2712-44-W40-3-14		1	●	TIB	7493793	778,00
T2712-52-W40-4-14		1	●	TIB	7493794	941,00
T2712.20-W19-3-06		1	●	TIB	7493797	381,00
T2712.23-W26-3-09		1	●	TIB	7493798	467,00
T2712.28-W31-3-09		1	●	TIB	7493799	537,00
T2713-17-W16-3-06		1	●	TIB	7976727	342,00
T2713-19-W20-3-06		1	●	TIB	7493800	401,00
T2713-24-W25-3-09		1	●	TIB	7493801	509,00
T2713-29-W32-3-09		1	●	TIB	7020616	582,00
T2713-35-W32-3-11		1	●	TIB	7493802	660,00
T2713-40-W40-3-14		1	●	TIB	7493803	742,00
T2713-44-W40-3-14		1	●	TIB	7493804	830,00
T2713-52-W40-4-14		1	●	TIB	7493805	1.000,00
T2713-60-C5-4-14		1	●	TIB	7493806	995,00
T2713-73-C6-5-14		1	●	TIB	7356303	1.298,00
T2713-94-C8-5-22		1	●	TIB	7566133	1.632,00
T4691206-11X3	TICN	1	●	TII	5115653	114,00
T4691206-11X5	TICN	1	●	TII	5115654	209,00
T4691206-14X3	TICN	1	●	TII	5115655	114,00
T9111000-20X3		1	●	TIB	5115659	467,00
T9111000-25X5		1	●	TIB	5115660	543,00
T9111030-3XT10		1	●	TIB	5115664	3,10
T9111050-5XT25		1	●	TIB	5115667	7,55
T9131000-25X5		1	●	TIB	5115671	682,00
TC115-SET2-M3-M12-WY80AA	WY80AA	1	●	ZS2	7818244	164,00
TC115-SET2-M3-M12-WY80FC	WY80FC	1	●	ZS2	7818243	138,00
TC115-SET1-M3-M12-WY80AA	WY80AA	1	●	ZS2	7817859	132,00
TC115-SET1-M3-M12-WY80FC	WY80FC	1	●	ZS2	7817858	106,00
TC115-M1.6-C0-WY80AA	WY80AA	1	●	T15	7606181	29,30
TC115-M1.6-C0-WY80FC	WY80FC	1	●	T15	7606138	23,39
TC115-M2-C0-WY80AA	WY80AA	1	●	T15	7606182	26,30
TC115-M2-C0-WY80FC	WY80FC	1	●	T15	7606139	21,05
TC115-M2.5-C0-WY80AA	WY80AA	1	●	T15	7606183	23,39
TC115-M2.5-C0-WY80FC	WY80FC	1	●	T15	7606180	18,71
TC115-M3-C0-WY80AA	WY80AA	1	●	T15	6743424	20,49
TC115-M3-C0-WY80FC	WY80FC	1	●	T15	6743384	16,40
TC115-M3-CE-WY80AA	WY80AA	1	●	T15	7629582	20,49
TC115-M4-C0-WY80AA	WY80AA	1	●	T15	6743425	19,03
TC115-M4-C0-WY80FC	WY80FC	1	●	T15	6743385	15,20
TC115-M4-CE-WY80AA	WY80AA	1	●	T15	7629583	19,03
TC115-M5-C0-WY80AA	WY80AA	1	●	T15	6743426	20,49
TC115-M5-C0-WY80FC	WY80FC	1	●	T15	6743386	16,40
TC115-M5-CE-WY80AA	WY80AA	1	●	T15	7629584	20,49
TC115-M6-C0-WY80AA	WY80AA	1	●	T15	6743427	23,39
TC115-M6-C0-WY80FC	WY80FC	1	●	T15	6743387	18,72
TC115-M6-CE-WY80AA	WY80AA	1	●	T15	7629585	23,39
TC115-M8-C0-WY80AA	WY80AA	1	●	T15	6743428	29,30
TC115-M8-C0-WY80FC	WY80FC	1	●	T15	6743388	23,39
TC115-M8-CE-WY80AA	WY80AA	1	●	T15	7629586	29,30
TC115-M10-C0-WY80AA	WY80AA	1	●	T15	6743429	35,10
TC115-M10-C0-WY80FC	WY80FC	1	●	T15	6743389	28,10
TC115-M10-CE-WY80AA	WY80AA	1	●	T15	7629587	35,10
TC115-M12-L0-WY80AA	WY80AA	1	●	T15	6743430	41,00
TC115-M12-L0-WY80FC	WY80FC	1	●	T15	6743420	32,80
TC115-M12-LE-WY80AA	WY80AA	1	●	T15	7629588	41,00
TC115-M14-L0-WY80AA	WY80AA	1	●	T15	6743431	46,80
TC115-M14-L0-WY80FC	WY80FC	1	●	T15	6743421	37,40
TC115-M14-LE-WY80AA	WY80AA	1	●	T15	7629589	46,80
TC115-M16-L0-WY80AA	WY80AA	1	●	T15	6743432	52,70
TC115-M16-L0-WY80FC	WY80FC	1	●	T15	6743422	42,20
TC115-M16-LE-WY80AA	WY80AA	1	●	T15	7629590	52,70
TC115-M20-L0-WY80AA	WY80AA	1	●	T15	6743433	73,70
TC115-M20-L0-WY80FC	WY80FC	1	●	T15	6743423	59,00
TC115-M20-LE-WY80AA	WY80AA	1	●	T15	7629591	73,70

Bezeichnung / Designation	Sorte / Grade	VE / US		Disc. Gr.	Article No.	EURO Stück / piece
TC115-M8X1-L0-WY80AA	WY80AA	1	●	T15	6958842	32,20
TC115-M8X1-L0-WY80FC	WY80FC	1	●	T15	6958835	25,70
TC115-M10X1-L0-WY80AA	WY80AA	1	●	T15	6958843	38,60
TC115-M10X1-L0-WY80FC	WY80FC	1	●	T15	6958836	30,90
TC115-M10X1.25-L0-WY80AA	WY80AA	1	●	T15	7651359	38,60
TC115-M10X1.25-L0-WY80FC	WY80FC	1	●	T15	7651358	30,90
TC115-M12X1.25-L0-WY80AA	WY80AA	1	●	T15	6958844	45,10
TC115-M12X1.25-L0-WY80FC	WY80FC	1	●	T15	6958837	36,10
TC115-M12X1.5-L0-WY80AA	WY80AA	1	●	T15	6958845	45,10
TC115-M12X1.5-L0-WY80FC	WY80FC	1	●	T15	6958838	36,10
TC115-M14X1.5-L0-WY80AA	WY80AA	1	●	T15	6958846	54,10
TC115-M14X1.5-L0-WY80FC	WY80FC	1	●	T15	6958839	43,30
TC115-M16X1.5-L0-WY80AA	WY80AA	1	●	T15	6958847	60,80
TC115-M16X1.5-L0-WY80FC	WY80FC	1	●	T15	6958840	48,70
TC115-M18X1.5-L0-WY80AA	WY80AA	1	●	T15	6958848	67,60
TC115-M18X1.5-L0-WY80FC	WY80FC	1	●	T15	6958841	54,10
TC115-UNC6-C0-WY80AA	WY80AA	1	●	T15	7305168	20,49
TC115-UNC8-C0-WY80AA	WY80AA	1	●	T15	7305169	19,03
TC115-UNC10-C0-WY80AA	WY80AA	1	●	T15	7305270	20,49
TC115-UNC1/4-C0-WY80AA	WY80AA	1	●	T15	7305271	23,39
TC115-UNC5/16-C0-WY80AA	WY80AA	1	●	T15	7305272	29,30
TC115-UNC3/8-C0-WY80AA	WY80AA	1	●	T15	7305273	35,10
TC115-UNC1/2-L0-WY80AA	WY80AA	1	●	T15	7305274	41,00
TC115-UNC5/8-L0-WY80AA	WY80AA	1	●	T15	7305275	55,30
TC115-UNC3/4-L0-WY80AA	WY80AA	1	●	T15	7305276	73,70
TC115-UNF6-C0-WY80AA	WY80AA	1	●	T15	7974926	21,73
TC115-UNF10-C0-WY80AA	WY80AA	1	●	T15	7974927	22,52
TC115-UNF1/4-C0-WY80AA	WY80AA	1	●	T15	7974928	25,70
TC115-UNF5/16-C0-WY80AA	WY80AA	1	●	T15	7974929	32,20
TC115-UNF3/8-C0-WY80AA	WY80AA	1	●	T15	7974980	38,60
TC115-UNF7/16-L0-WY80AA	WY80AA	1	●	T15	7974981	41,80
TC115-UNF1/2-L0-WY80AA	WY80AA	1	●	T15	7974982	45,10
TC115.UNC1/2-L0-WY80AA	WY80AA	1	●	T15	7606559	41,00
TC115.UNC1/4-C0-WY80AA	WY80AA	1	●	T15	7606556	23,39
TC115.UNC10-C0-WY80AA	WY80AA	1	●	T15	7606555	20,49
TC115.UNC3/4-L0-WY80AA	WY80AA	1	●	T15	7606581	73,70
TC115.UNC3/8-C0-WY80AA	WY80AA	1	●	T15	7606558	35,10
TC115.UNC5/16-C0-WY80AA	WY80AA	1	●	T15	7606557	29,30
TC115.UNC5/8-L0-WY80AA	WY80AA	1	●	T15	7606580	55,30
TC115.UNC6-C0-WY80AA	WY80AA	1	●	T15	7606553	20,49
TC115.UNC8-C0-WY80AA	WY80AA	1	●	T15	7606554	19,03
TC115.UNF1/2-L0-WY80AA	WY80AA	1	●	T15	7528638	45,10
TC115.UNF1/4-C0-WY80AA	WY80AA	1	●	T15	7528634	25,70
TC115.UNF10-C0-WY80AA	WY80AA	1	●	T15	7528633	22,52
TC115.UNF3/4-L0-WY80AA	WY80AA	1	●	T15	7528671	81,10
TC115.UNF3/8-C0-WY80AA	WY80AA	1	●	T15	7528636	38,60
TC115.UNF5/16-C0-WY80AA	WY80AA	1	●	T15	7528635	32,20
TC115.UNF5/8-L0-WY80AA	WY80AA	1	●	T15	7528670	60,80
TC115.UNF7/16-L0-WY80AA	WY80AA	1	●	T15	7528637	41,80
TC115.UNF9/16-L0-WY80AA	WY80AA	1	●	T15	7528639	54,10
TC120-M3-C0-WW60AG	WW60AG	1	●	T35	7262899	61,30
TC120-M4-C0-WW60AG	WW60AG	1	●	T35	7263030	56,90
TC120-M5-C0-WW60AG	WW60AG	1	●	T35	7263031	61,30
TC120-M6-C0-WW60AG	WW60AG	1	●	T35	7263032	70,10
TC120-M8-C0-WW60AG	WW60AG	1	●	T35	7263033	87,60
TC120-M8-C1-WW60AG	WW60AG	1	●	T35	7263040	114,00
TC120-M10-C0-WW60AG	WW60AG	1	●	T35	7263034	105,00
TC120-M10-C1-WW60AG	WW60AG	1	●	T35	7263041	137,00
TC120-M12-L0-WW60AG	WW60AG	1	●	T35	7263035	129,00
TC120-M12-L1-WW60AG	WW60AG	1	●	T35	7263042	167,00
TC120-M16-L0-WW60AG	WW60AG	1	●	T35	7263036	166,00
TC120-M16-L1-WW60AG	WW60AG	1	●	T35	7263043	215,00
TC120-M20-L0-WW60AG	WW60AG	1	●	T35	7263037	221,00
TC120-M24-L0-WW60AG	WW60AG	1	●	T35	7263038	294,00
TC120-M30-L0-WW60AG	WW60AG	1	●	T35	7263039	478,00
TC121-M2-C0-WW60RG	WW60RG	1	●	T35	7240800	78,80
TC121-M3-C0-WW60RG	WW60RG	1	●	T35	7240801	61,30
TC121-M3-C0-WY80BD	WY80BD	1	●	T35	7240812	61,30
TC121-M4-C0-WW60RG	WW60RG	1	●	T35	7240802	56,90
TC121-M4-C0-WY80BD	WY80BD	1	●	T35	7240813	56,90

Bezeichnung / Designation	Sorte / Grade	VE / US		Disc. Gr.	Article No.	EURO Stück / piece
TC121-M5-C0-WW60RG	WW60RG	1	●	T35	7240803	61,30
TC121-M5-C0-WY80BD	WY80BD	1	●	T35	7240814	61,30
TC121-M5-C1-WW60RG	WW60RG	1	●	T35	7240822	79,70
TC121-M6-C0-WW60RG	WW60RG	1	●	T35	7240804	70,10
TC121-M6-C0-WY80BD	WY80BD	1	●	T35	7240815	70,10
TC121-M6-C1-WW60RG	WW60RG	1	●	T35	7240823	91,10
TC121-M8-C0-WW60RG	WW60RG	1	●	T35	7240805	87,60
TC121-M8-C0-WY80BD	WY80BD	1	●	T35	7240816	87,60
TC121-M8-C1-WW60RG	WW60RG	1	●	T35	7240824	114,00
TC121-M10-C0-WW60RG	WW60RG	1	●	T35	7240806	105,00
TC121-M10-C0-WY80BD	WY80BD	1	●	T35	7240817	105,00
TC121-M10-C1-WW60RG	WW60RG	1	●	T35	7240825	137,00
TC121-M12-L0-WW60RG	WW60RG	1	●	T35	7240807	129,00
TC121-M12-L0-WY80BD	WY80BD	1	●	T35	7240818	129,00
TC121-M12-L1-WW60RG	WW60RG	1	●	T35	7240826	167,00
TC121-M14-L0-WW60RG	WW60RG	1	●	T35	7240808	147,00
TC121-M14-L0-WY80BD	WY80BD	1	●	T35	7240819	147,00
TC121-M14-L1-WW60RG	WW60RG	1	●	T35	7240827	191,00
TC121-M16-L0-WW60RG	WW60RG	1	●	T35	7240809	166,00
TC121-M16-L0-WY80BD	WY80BD	1	●	T35	7240820	166,00
TC121-M16-L1-WW60RG	WW60RG	1	●	T35	7240828	215,00
TC121-M20-L0-WW60RG	WW60RG	1	●	T35	7240810	221,00
TC121-M20-L0-WY80BD	WY80BD	1	●	T35	7240821	221,00
TC121-M20-L1-WW60RG	WW60RG	1	●	T35	7240829	287,00
TC122-M3-C0-WW60BC	WW60BC	1	●	T35	7270122	61,30
TC122-M4-C0-WW60BC	WW60BC	1	●	T35	7270123	56,90
TC122-M5-C0-WW60BC	WW60BC	1	●	T35	7270124	61,30
TC122-M5-C1-WW60BC	WW60BC	1	●	T35	7270142	79,70
TC122-M6-C0-WW60BC	WW60BC	1	●	T35	7270125	70,10
TC122-M6-C1-WW60BC	WW60BC	1	●	T35	7270143	91,10
TC122-M8-C0-WW60BC	WW60BC	1	●	T35	7270126	87,60
TC122-M8-C1-WW60BC	WW60BC	1	●	T35	7270144	114,00
TC122-M10-C0-WW60BC	WW60BC	1	●	T35	7270127	105,00
TC122-M10-C1-WW60BC	WW60BC	1	●	T35	7270145	137,00
TC122-M12-L0-WW60BC	WW60BC	1	●	T35	7270128	129,00
TC122-M12-L1-WW60BC	WW60BC	1	●	T35	7270146	167,00
TC122-M14-L0-WW60BC	WW60BC	1	●	T35	7270129	147,00
TC122-M14-L1-WW60BC	WW60BC	1	●	T35	7270147	191,00
TC122-M16-L0-WW60BC	WW60BC	1	●	T35	7270140	166,00
TC122-M16-L1-WW60BC	WW60BC	1	●	T35	7270148	215,00
TC122-M20-L0-WW60BC	WW60BC	1	●	T35	7270141	221,00
TC122-M20-L1-WW60BC	WW60BC	1	●	T35	7270149	287,00
TC130-M4-C1-WY80AA	WY80AA	1	●	T35	8237413	43,90
TC130-M4-C1-WY80EH	WY80EH	1	●	T35	8128404	49,70
TC130-M5-C1-WY80AA	WY80AA	1	●	T35	8237414	47,30
TC130-M5-C1-WY80EH	WY80EH	1	●	T35	8128405	53,50
TC130-M6-C1-WY80AA	WY80AA	1	●	T35	8237415	54,10
TC130-M6-C1-WY80EH	WY80EH	1	●	T35	8128406	61,10
TC130-M8-C1-WY80AA	WY80AA	1	●	T35	8237416	67,60
TC130-M8-C1-WY80EH	WY80EH	1	●	T35	8128407	76,40
TC130-M8-LG-WY80AA	WY80AA	1	●	T35	8237468	94,60
TC130-M8-LG-WY80EH	WY80EH	1	●	T35	8128439	107,00
TC130-M10-C1-WY80AA	WY80AA	1	●	T35	8237417	81,10
TC130-M10-C1-WY80EH	WY80EH	1	●	T35	8128408	91,70
TC130-M10-LG-WY80AA	WY80AA	1	●	T35	8237469	114,00
TC130-M10-LG-WY80EH	WY80EH	1	●	T35	8128440	128,00
TC130-M12-L1-WY80AA	WY80AA	1	●	T35	8237418	94,60
TC130-M12-L1-WY80EH	WY80EH	1	●	T35	8128409	107,00
TC130-M12-LG-WY80AA	WY80AA	1	●	T35	8237470	132,00
TC130-M12-LG-WY80EH	WY80EH	1	●	T35	8128441	150,00
TC130-M14-L1-WY80AA	WY80AA	1	●	T35	8237419	108,00
TC130-M14-LG-WY80AA	WY80AA	1	●	T35	8237471	151,00
TC130-M16-L1-WY80AA	WY80AA	1	●	T35	8237460	122,00
TC130-M16-L1-WY80EH	WY80EH	1	●	T35	8128431	138,00
TC130-M16-LG-WY80AA	WY80AA	1	●	T35	8237472	170,00
TC130-M16-LG-WY80EH	WY80EH	1	●	T35	8128443	193,00
TC130-M20-L1-WY80AA	WY80AA	1	●	T35	8237461	162,00
TC130-M20-L1-WY80EH	WY80EH	1	●	T35	8128432	183,00
TC130-M20-LG-WY80AA	WY80AA	1	●	T35	8237473	227,00
TC130-M20-LG-WY80EH	WY80EH	1	●	T35	8128444	257,00

Bezeichnung / Designation	Sorte / Grade	VE / US		Disc. Gr.	Article No.	EURO Stück / piece
TC130-M22-L1-WY80AA	WY80AA	1	●	T35	8237462	189,00
TC130-M22-LG-WY80AA	WY80AA	1	●	T35	8237474	265,00
TC130-M24-L1-WY80AA	WY80AA	1	●	T35	8237463	227,00
TC130-M24-L1-WY80EH	WY80EH	1	●	T35	8128434	257,00
TC130-M24-LG-WY80AA	WY80AA	1	●	T35	8237475	318,00
TC130-M24-LG-WY80EH	WY80EH	1	●	T35	8128446	359,00
TC130-M27-L1-WY80AA	WY80AA	1	●	T35	8237464	312,00
TC130-M27-LG-WY80AA	WY80AA	1	●	T35	8237476	437,00
TC130-M30-L1-WY80AA	WY80AA	1	●	T35	8237465	369,00
TC130-M30-L1-WY80EH	WY80EH	1	●	T35	8128436	417,00
TC130-M30-LG-WY80AA	WY80AA	1	●	T35	8237477	517,00
TC130-M30-LG-WY80EH	WY80EH	1	●	T35	8128448	584,00
TC130-M33-LG-WY80AA	WY80AA	1	●	T35	8237478	596,00
TC130-M36-L1-WY80AA	WY80AA	1	●	T35	8237466	535,00
TC130-M36-L1-WY80EH	WY80EH	1	●	T35	8128437	605,00
TC130-M36-LG-WY80AA	WY80AA	1	●	T35	8237479	750,00
TC130-M36-LG-WY80EH	WY80EH	1	●	T35	8128450	847,00
TC130-M42-L1-WY80AA	WY80AA	1	●	T35	8237467	744,00
TC130-M42-LG-WY80AA	WY80AA	1	●	T35	8237480	1.041,00
TC130-M10X1-L1-WY80AA	WY80AA	1	●	T35	8237481	89,20
TC130-M10X1-L1-WY80EH	WY80EH	1	●	T35	8128452	101,00
TC130-M12X1.5-L1-WY80AA	WY80AA	1	●	T35	8237482	104,00
TC130-M12X1.5-L1-WY80EH	WY80EH	1	●	T35	8128453	118,00
TC130-M14X1.5-L1-WY80AA	WY80AA	1	●	T35	8237483	119,00
TC130-M14X1.5-L1-WY80EH	WY80EH	1	●	T35	8128454	134,00
TC130-M16X1.5-L1-WY80AA	WY80AA	1	●	T35	8237484	134,00
TC130-M16X1.5-L1-WY80EH	WY80EH	1	●	T35	8128455	151,00
TC130-M18X1.5-L1-WY80AA	WY80AA	1	●	T35	8237485	156,00
TC130-M18X1.5-L1-WY80EH	WY80EH	1	●	T35	8128456	177,00
TC130-M20X1.5-L1-WY80AA	WY80AA	1	●	T35	8237486	178,00
TC130-M20X1.5-L1-WY80EH	WY80EH	1	●	T35	8128457	202,00
TC130-M22X1.5-L1-WY80AA	WY80AA	1	●	T35	8237487	208,00
TC130-M22X1.5-L1-WY80EH	WY80EH	1	●	T35	8128458	235,00
TC130-M24X1.5-L1-WY80AA	WY80AA	1	●	T35	8237488	250,00
TC130-M30X2-L1-WY80AA	WY80AA	1	●	T35	8237489	406,00
TC130-M33X2-L1-WY80AA	WY80AA	1	●	T35	8237490	468,00
TC130-UNC1-L1-WY80AA	WY80AA	1	●	T35	8237497	256,00
TC130-UNC1/4-C1-WY80AA	WY80AA	1	●	T35	8237491	54,10
TC130-UNC5/16-C1-WY80AA	WY80AA	1	●	T35	8237492	67,60
TC130-UNC3/8-C1-WY80AA	WY80AA	1	●	T35	8237493	81,10
TC130-UNC1/2-L1-WY80AA	WY80AA	1	●	T35	8237494	94,60
TC130-UNC5/8-L1-WY80AA	WY80AA	1	●	T35	8237495	122,00
TC130-UNC3/4-L1-WY80AA	WY80AA	1	●	T35	8237496	162,00
TC142-G1/8-L0-WY80FC	WY80FC	1	●	T35	6907314	46,00
TC142-G1/4-L0-WY80FC	WY80FC	1	●	T35	6907315	52,60
TC142-M1.6-C0-WY80FC	WY80FC	1	●	T35	6714318	62,40
TC142-M2-C0-WW60RB	WW60RB	1	●	T35	6714351	72,30
TC142-M2-C0-WY80FC	WY80FC	1	●	T35	6714319	59,10
TC142-M2.3-C0-WY80FC	WY80FC	1	●	T35	6714330	54,20
TC142-M2.5-C0-WY80FC	WY80FC	1	●	T35	6714331	50,90
TC142-M2.6-C0-WY80FC	WY80FC	1	●	T35	6714332	49,30
TC142-M3-C0-WW60RB	WW60RB	1	●	T35	6714352	56,20
TC142-M3-C0-WY80FC	WY80FC	1	●	T35	6714333	46,00
TC142-M4-C0-WW60RB	WW60RB	1	●	T35	6714353	52,20
TC142-M4-C0-WY80FC	WY80FC	1	●	T35	6714334	42,70
TC142-M5-C0-WW60RB	WW60RB	1	●	T35	6714354	56,20
TC142-M5-C0-WY80FC	WY80FC	1	●	T35	6714335	46,00
TC142-M6-C0-WW60RB	WW60RB	1	●	T35	6714355	64,20
TC142-M6-C0-WY80FC	WY80FC	1	●	T35	6714336	52,60
TC142-M6-L0-WY80FC	WY80FC	1	●	T35	6714339	52,60
TC142-M8-C0-WW60RB	WW60RB	1	●	T35	6714356	80,30
TC142-M8-C0-WY80FC	WY80FC	1	●	T35	6714337	65,70
TC142-M8-L0-WY80FC	WY80FC	1	●	T35	6714340	65,70
TC142-M10-C0-WW60RB	WW60RB	1	●	T35	6714357	96,30
TC142-M10-C0-WY80FC	WY80FC	1	●	T35	6714338	78,80
TC142-M10-L0-WW60RB	WW60RB	1	●	T35	6714358	96,30
TC142-M10-L0-WY80FC	WY80FC	1	●	T35	6714341	78,80
TC142-M12-L0-WW60RB	WW60RB	1	●	T35	6714359	112,00
TC142-M12-L0-WY80FC	WY80FC	1	●	T35	6714342	92,00
TC142-M14-L0-WW60RB	WW60RB	1	●	T35	6714360	128,00

Bezeichnung / Designation	Sorte / Grade	VE / US		Disc. Gr.	Article No.	EURO Stück / piece
TC142-M14-L0-WY80FC	WY80FC	1	●	T35	6714343	105,00
TC142-M16-L0-WW60RB	WW60RB	1	●	T35	6714361	152,00
TC142-M16-L0-WY80FC	WY80FC	1	●	T35	6714344	124,00
TC142-M18-L0-WW60RB	WW60RB	1	●	T35	6714362	177,00
TC142-M20-L0-WW60RB	WW60RB	1	●	T35	6714363	202,00
TC142-M20-L0-WY80FC	WY80FC	1	●	T35	6714345	166,00
TC142-M24-L0-WW60RB	WW60RB	1	●	T35	6714364	270,00
TC142-M24-L0-WY80FC	WY80FC	1	●	T35	6714346	221,00
TC142-M27-L0-WY80FC	WY80FC	1	●	T35	6714347	303,00
TC142-M30-L0-WY80FC	WY80FC	1	●	T35	6714348	376,00
TC142-M33-L0-WY80FC	WY80FC	1	●	T35	6714349	434,00
TC142-M36-L0-WY80FC	WY80FC	1	●	T35	6714350	520,00
TC142-M8X1-L0-WW60RB	WW60RB	1	●	T35	6714365	88,30
TC142-M10X1-L0-WW60RB	WW60RB	1	●	T35	6714366	106,00
TC142-M10X1.25-L0-WW60RB	WW60RB	1	●	T35	6714367	106,00
TC142-M12X1-L0-WW60RB	WW60RB	1	●	T35	6714368	130,00
TC142-M12X1.25-L0-WW60RB	WW60RB	1	●	T35	6714369	130,00
TC142-M12X1.5-L0-WW60RB	WW60RB	1	●	T35	6714370	130,00
TC142-M14X1.5-L0-WW60RB	WW60RB	1	●	T35	6714371	148,00
TC142-M16X1.5-L0-WW60RB	WW60RB	1	●	T35	6714372	167,00
TC142-M20X1.5-L0-WW60RB	WW60RB	1	●	T35	6714373	223,00
TC142.UNC1/2-L0-WW60RB	WW60RB	1	●	T35	7569272	110,00
TC142.UNC1/2-L0-WY80FC	WY80FC	1	●	T35	7569263	99,00
TC142.UNC1/4-C0-WW60RB	WW60RB	1	●	T35	7569269	62,90
TC142.UNC1/4-C0-WY80FC	WY80FC	1	■	T35	7569260*	56,60
TC142.UNC10-C0-WW60RB	WW60RB	1	●	T35	7569268	55,00
TC142.UNC10-C0-WY80FC	WY80FC	1	●	T35	7569259	49,50
TC142.UNC2-C0-WY80FC	WY80FC	1	●	T35	7569255	63,60
TC142.UNC3/4-L0-WY80FC	WY80FC	1	■	T35	7569265*	178,00
TC142.UNC3/8-C0-WW60RB	WW60RB	1	●	T35	7569271	94,30
TC142.UNC3/8-C0-WY80FC	WY80FC	1	●	T35	7569262	84,90
TC142.UNC4-C0-WY80FC	WY80FC	1	●	T35	7569256	49,50
TC142.UNC5/16-C0-WW60RB	WW60RB	1	●	T35	7569270	78,60
TC142.UNC5/16-C0-WY80FC	WY80FC	1	●	T35	7569261	70,70
TC142.UNC5/8-L0-WY80FC	WY80FC	1	●	T35	7569264	134,00
TC142.UNC6-C0-WY80FC	WY80FC	1	●	T35	7569257	47,70
TC142.UNC8-C0-WW60RB	WW60RB	1	●	T35	7569267	51,10
TC142.UNC8-C0-WY80FC	WY80FC	1	●	T35	7569258	46,00
TC142.UNF1/2-L0-WY80FC	WY80FC	1	■	T35	7569280*	114,00
TC142.UNF1/4-C0-WY80FC	WY80FC	1	●	T35	7569276	62,20
TC142.UNF10-C0-WY80FC	WY80FC	1	●	T35	7569275	54,40
TC142.UNF3/8-C0-WY80FC	WY80FC	1	●	T35	7569278	93,30
TC142.UNF5/16-C0-WY80FC	WY80FC	1	■	T35	7569277*	77,80
TC142.UNF7/16-L0-WY80FC	WY80FC	1	●	T35	7569279	101,00
TC216-SET1-M3-M12-WY80FC	WY80FC	1	●	ZS2	7817856	101,00
TC216-SET1-M3-M12-WY80AA	WY80AA	1	●	ZS2	7817857	126,00
TC216-SET2-M3-M12-WY80FC	WY80FC	1	●	ZS2	7818241	133,00
TC216-SET2-M3-M12-WY80AA	WY80AA	1	●	ZS2	7818242	158,00
TC216-M1.6-C0-WY80AA	WY80AA	1	●	T15	7606187	27,90
TC216-M1.6-C0-WY80FC	WY80FC	1	●	T15	7606184	22,30
TC216-M2-C0-WY80AA	WY80AA	1	●	T15	7606188	25,10
TC216-M2-C0-WY80FC	WY80FC	1	●	T15	7606185	20,06
TC216-M2.5-C0-WY80AA	WY80AA	1	●	T15	7606189	22,30
TC216-M2.5-C0-WY80FC	WY80FC	1	●	T15	7606186	17,82
TC216-M3-C0-WY80AA	WY80AA	1	●	T15	6743444	19,51
TC216-M3-C0-WY80FC	WY80FC	1	●	T15	6743434	15,63
TC216-M4-C0-WY80AA	WY80AA	1	●	T15	6743445	18,13
TC216-M4-C0-WY80FC	WY80FC	1	●	T15	6743435	14,49
TC216-M5-C0-WY80AA	WY80AA	1	●	T15	6743446	19,51
TC216-M5-C0-WY80FC	WY80FC	1	●	T15	6743436	15,63
TC216-M6-C0-WY80AA	WY80AA	1	●	T15	6743447	22,30
TC216-M6-C0-WY80FC	WY80FC	1	●	T15	6743437	17,81
TC216-M8-C0-WY80AA	WY80AA	1	●	T15	6743448	27,90
TC216-M8-C0-WY80FC	WY80FC	1	●	T15	6743438	22,30
TC216-M10-C0-WY80AA	WY80AA	1	●	T15	6743449	33,50
TC216-M10-C0-WY80FC	WY80FC	1	●	T15	6743439	26,80
TC216-M12-L0-WY80AA	WY80AA	1	●	T15	6743450	39,00
TC216-M12-L0-WY80FC	WY80FC	1	●	T15	6743440	31,20
TC216-M14-L0-WY80AA	WY80AA	1	●	T15	6743451	46,80
TC216-M14-L0-WY80FC	WY80FC	1	●	T15	6743441	37,50

Bezeichnung / Designation	Sorte / Grade	VE / US		Disc. Gr.	Article No.	EURO Stück / piece
TC216-M16-L0-WY80AA	WY80AA	1	●	T15	6743452	52,70
TC216-M16-L0-WY80FC	WY80FC	1	●	T15	6743442	42,20
TC216-M20-L0-WY80AA	WY80AA	1	●	T15	6743453	70,20
TC216-M20-L0-WY80FC	WY80FC	1	●	T15	6743443	56,20
TC216-M8X1-L0-WY80AA	WY80AA	1	●	T15	6958856	30,60
TC216-M8X1-L0-WY80FC	WY80FC	1	●	T15	6958849	24,53
TC216-M10X1-L0-WY80AA	WY80AA	1	●	T15	6958857	36,80
TC216-M10X1-L0-WY80FC	WY80FC	1	●	T15	6958850	29,40
TC216-M10X1.25-L0-WY80AA	WY80AA	1	●	T15	7651431	36,80
TC216-M10X1.25-L0-WY80FC	WY80FC	1	●	T15	7651430	29,40
TC216-M12X1.25-L0-WY80AA	WY80AA	1	●	T15	6958858	42,90
TC216-M12X1.25-L0-WY80FC	WY80FC	1	●	T15	6958851	34,30
TC216-M12X1.5-L0-WY80AA	WY80AA	1	●	T15	6958859	42,90
TC216-M12X1.5-L0-WY80FC	WY80FC	1	●	T15	6958852	34,30
TC216-M14X1.5-L0-WY80AA	WY80AA	1	●	T15	6958860	51,50
TC216-M14X1.5-L0-WY80FC	WY80FC	1	●	T15	6958853	41,20
TC216-M16X1.5-L0-WY80AA	WY80AA	1	●	T15	6958861	57,90
TC216-M16X1.5-L0-WY80FC	WY80FC	1	●	T15	6958854	46,30
TC216-M18X1.5-L0-WY80AA	WY80AA	1	●	T15	6958862	64,20
TC216-M18X1.5-L0-WY80FC	WY80FC	1	●	T15	6958855	51,40
TC216-UNC6-C0-WY80AA	WY80AA	1	●	T15	7305277	19,51
TC216-UNC8-C0-WY80AA	WY80AA	1	●	T15	7305278	18,13
TC216-UNC10-C0-WY80AA	WY80AA	1	●	T15	7305279	19,51
TC216-UNC1/4-C0-WY80AA	WY80AA	1	●	T15	7305280	22,30
TC216-UNC5/16-C0-WY80AA	WY80AA	1	●	T15	7305281	27,90
TC216-UNC3/8-C0-WY80AA	WY80AA	1	●	T15	7305282	33,50
TC216-UNC1/2-L0-WY80AA	WY80AA	1	●	T15	7305283	39,00
TC216-UNC5/8-L0-WY80AA	WY80AA	1	●	T15	7305284	52,70
TC216-UNC3/4-L0-WY80AA	WY80AA	1	●	T15	7305285	70,20
TC216-UNF6-C0-WY80AA	WY80AA	1	●	T15	7974983	20,71
TC216-UNF10-C0-WY80AA	WY80AA	1	●	T15	7974984	21,49
TC216-UNF1/4-C0-WY80AA	WY80AA	1	●	T15	7974985	24,53
TC216-UNF5/16-C0-WY80AA	WY80AA	1	●	T15	7974986	30,60
TC216-UNF3/8-C0-WY80AA	WY80AA	1	●	T15	7974987	36,80
TC216-UNF7/16-L0-WY80AA	WY80AA	1	●	T15	7974988	39,90
TC216-UNF1/2-L0-WY80AA	WY80AA	1	●	T15	7974989	42,90
TC216.UNC1/2-L0-WY80AA	WY80AA	1	●	T15	7606588	39,00
TC216.UNC1/4-C0-WY80AA	WY80AA	1	●	T15	7606585	22,30
TC216.UNC10-C0-WY80AA	WY80AA	1	●	T15	7606584	19,51
TC216.UNC3/4-L0-WY80AA	WY80AA	1	●	T15	7606590	70,20
TC216.UNC3/8-C0-WY80AA	WY80AA	1	●	T15	7606587	33,50
TC216.UNC5/16-C0-WY80AA	WY80AA	1	●	T15	7606586	27,90
TC216.UNC5/8-L0-WY80AA	WY80AA	1	●	T15	7606589	52,70
TC216.UNC6-C0-WY80AA	WY80AA	1	●	T15	7606582	19,51
TC216.UNC8-C0-WY80AA	WY80AA	1	●	T15	7606583	18,13
TC216.UNF1/2-L0-WY80AA	WY80AA	1	●	T15	7528677	42,90
TC216.UNF1/4-C0-WY80AA	WY80AA	1	●	T15	7528673	24,53
TC216.UNF10-C0-WY80AA	WY80AA	1	●	T15	7528672	21,49
TC216.UNF3/4-L0-WY80AA	WY80AA	1	●	T15	7528680	77,30
TC216.UNF3/8-C0-WY80AA	WY80AA	1	●	T15	7528675	36,80
TC216.UNF5/16-C0-WY80AA	WY80AA	1	●	T15	7528674	30,60
TC216.UNF5/8-L0-WY80AA	WY80AA	1	●	T15	7528679	57,90
TC216.UNF7/16-L0-WY80AA	WY80AA	1	●	T15	7528676	39,90
TC216.UNF9/16-L0-WY80AA	WY80AA	1	●	T15	7528678	51,50
TC388-G1/8-C0-WJ30TU	WJ30TU	1	●	TS2	8205992	440,00
TC388-G1/4-C0-WJ30TU	WJ30TU	1	●	TS2	8205993	560,00
TC388-M3-C0-WJ30TU	WJ30TU	1	●	TS2	8205974	176,00
TC388-M4-C0-WJ30TU	WJ30TU	1	●	TS2	8205975	188,00
TC388-M5-C0-WJ30TU	WJ30TU	1	●	TS2	8205976	217,00
TC388-M6-C0-WJ30TU	WJ30TU	1	●	TS2	8205977	260,00
TC388-M8-C0-WJ30TU	WJ30TU	1	●	TS2	8205978	320,00
TC388-M10-C0-WJ30TU	WJ30TU	1	●	TS2	8205979	419,00
TC388-M12-C0-WJ30TU	WJ30TU	1	●	TS2	8205990	538,00
TC388-M16-C0-WJ30TU	WJ30TU	1	●	TS2	8205991	753,00
TC389-M3-CD-WE10TU	WE10TU	1	●	TS2	8205994	176,00
TC389-M4-CD-WE10TU	WE10TU	1	●	TS2	8205995	188,00
TC389-M5-CD-WE10TU	WE10TU	1	●	TS2	8205996	217,00
TC389-M6-CD-WE10TU	WE10TU	1	●	TS2	8205997	260,00
TC389-M8-CD-WE10TU	WE10TU	1	●	TS2	8205998	320,00
TC389-M10-CD-WE10TU	WE10TU	1	●	TS2	8205999	419,00

Bezeichnung / Designation	Sorte / Grade	VE / US		Disc. Gr.	Article No.	EURO Stück / piece
TC389-M12-CD-WE10TU	WE10TU	1	●	TS2	8206000	538,00
TC389-M16-CD-WE10TU	WE10TU	1	●	TS2	8206001	753,00
TC410-G1/8-N6-WY80AD	WY80AD	1	●	T27	7427661	91,70
TC410-G1/4-N6-WY80AD	WY80AD	1	●	T27	7427662	118,00
TC410-G3/8-N6-WY80AD	WY80AD	1	●	T27	7427663	141,00
TC410-G1/2-N6-WY80AD	WY80AD	1	●	T27	7427664	193,00
TC410-G3/4-N6-WY80AD	WY80AD	1	●	T27	7427665	330,00
TC410-G1-N6-WY80AD	WY80AD	1	●	T27	7427666	399,00
TC410-M1-C0-WY80AD	WY80AD	1	●	T27	7427486	72,40
TC410-M1.1-C0-WY80AD	WY80AD	1	●	T27	7427487	70,80
TC410-M1.2-C0-WY80AD	WY80AD	1	●	T27	7427488	69,30
TC410-M1.4-C0-WY80AD	WY80AD	1	●	T27	7427489	66,10
TC410-M1.6-C0-WY80AD	WY80AD	1	●	T27	7427490	63,00
TC410-M1.7-C0-WY80AD	WY80AD	1	●	T27	7427491	61,40
TC410-M1.8-C0-WY80AD	WY80AD	1	●	T27	7427492	59,80
TC410-M2-C0-WY80AD	WY80AD	1	●	T27	7427493	56,70
TC410-M2-C6-WY80AD	WY80AD	1	●	T27	7427538	68,60
TC410-M2-CD-WY80AD	WY80AD	1	●	T27	7427667	56,70
TC410-M2-E0-WY80AD	WY80AD	1	●	T27	7427512	56,70
TC410-M2-E6-WY80AD	WY80AD	1	●	T27	7427554	68,60
TC410-M2-F0-WY80AD	WY80AD	1	●	T27	7427522	56,70
TC410-M2-F6-WY80AD	WY80AD	1	●	T27	7427564	68,60
TC410-M2.2-C0-WY80AD	WY80AD	1	●	T27	7427494	53,50
TC410-M2.3-C0-WY80AD	WY80AD	1	●	T27	7427495	51,90
TC410-M2.5-C0-WY80AD	WY80AD	1	●	T27	7427496	48,80
TC410-M2.5-C6-WY80AD	WY80AD	1	●	T27	7427539	59,10
TC410-M2.5-E0-WY80AD	WY80AD	1	●	T27	7427513	48,80
TC410-M2.5-E6-WY80AD	WY80AD	1	●	T27	7427555	59,10
TC410-M2.5-F0-WY80AD	WY80AD	1	●	T27	7427523	48,80
TC410-M2.5-F6-WY80AD	WY80AD	1	●	T27	7427565	59,10
TC410-M2.6-C0-WY80AD	WY80AD	1	●	T27	7427497	47,20
TC410-M3-C0-WY80AD	WY80AD	1	●	T27	7427498	44,10
TC410-M3-C6-WY80AD	WY80AD	1	●	T27	7427540	54,80
TC410-M3-CD-WY80AD	WY80AD	1	●	T27	7427668	44,10
TC410-M3-CL-WY80AD	WY80AD	1	●	T27	7427530	44,10
TC410-M3-E0-WY80AD	WY80AD	1	●	T27	7427514	44,10
TC410-M3-E6-WY80AD	WY80AD	1	●	T27	7427556	54,80
TC410-M3-F0-WY80AD	WY80AD	1	●	T27	7427524	44,10
TC410-M3-F6-WY80AD	WY80AD	1	●	T27	7427566	54,80
TC410-M3.5-C0-WY80AD	WY80AD	1	●	T27	7427499	42,50
TC410-M3.5-C6-WY80AD	WY80AD	1	●	T27	7427541	52,90
TC410-M3.5-E0-WY80AD	WY80AD	1	●	T27	7427515	42,50
TC410-M3.5-E6-WY80AD	WY80AD	1	●	T27	7427557	52,90
TC410-M4-C0-WY80AD	WY80AD	1	●	T27	7427500	40,90
TC410-M4-C6-WY80AD	WY80AD	1	●	T27	7427542	52,30
TC410-M4-CD-WY80AD	WY80AD	1	●	T27	7427669	40,90
TC410-M4-CL-WY80AD	WY80AD	1	●	T27	7427531	40,90
TC410-M4-E0-WY80AD	WY80AD	1	●	T27	7427516	40,90
TC410-M4-E6-WY80AD	WY80AD	1	●	T27	7427558	52,30
TC410-M4-F0-WY80AD	WY80AD	1	●	T27	7427525	40,90
TC410-M4-F6-WY80AD	WY80AD	1	●	T27	7427567	52,30
TC410-M5-C0-WY80AD	WY80AD	1	●	T27	7427501	44,10
TC410-M5-C6-WY80AD	WY80AD	1	●	T27	7427543	56,30
TC410-M5-CD-WY80AD	WY80AD	1	●	T27	7427670	44,10
TC410-M5-CL-WY80AD	WY80AD	1	●	T27	7427532	44,10
TC410-M5-E0-WY80AD	WY80AD	1	●	T27	7427517	44,10
TC410-M5-E6-WY80AD	WY80AD	1	●	T27	7427559	56,30
TC410-M5-F0-WY80AD	WY80AD	1	●	T27	7427526	44,10
TC410-M5-F6-WY80AD	WY80AD	1	●	T27	7427568	56,30
TC410-M6-C0-WY80AD	WY80AD	1	●	T27	7427502	50,40
TC410-M6-C6-WY80AD	WY80AD	1	●	T27	7427544	64,30
TC410-M6-CD-WY80AD	WY80AD	1	●	T27	7427671	50,40
TC410-M6-CL-WY80AD	WY80AD	1	●	T27	7427533	50,40
TC410-M6-E0-WY80AD	WY80AD	1	●	T27	7427518	50,40
TC410-M6-E6-WY80AD	WY80AD	1	●	T27	7427560	64,30
TC410-M6-F0-WY80AD	WY80AD	1	●	T27	7427527	50,40
TC410-M6-F6-WY80AD	WY80AD	1	●	T27	7427569	64,30
TC410-M7-C0-WY80AD	WY80AD	1	●	T27	7427503	56,70
TC410-M7-C6-WY80AD	WY80AD	1	●	T27	7427545	72,40
TC410-M8-C0-WY80AD	WY80AD	1	●	T27	7427504	63,00

Bezeichnung / Designation	Sorte / Grade	VE / US		Disc. Gr.	Article No.	EURO Stück / piece
TC410-M8-C6-WY80AD	WY80AD	1	●	T27	7427546	80,40
TC410-M8-CD-WY80AD	WY80AD	1	●	T27	7427672	63,00
TC410-M8-CL-WY80AD	WY80AD	1	●	T27	7427534	63,00
TC410-M8-E0-WY80AD	WY80AD	1	●	T27	7427519	63,00
TC410-M8-E6-WY80AD	WY80AD	1	●	T27	7427561	80,40
TC410-M8-F0-WY80AD	WY80AD	1	●	T27	7427528	63,00
TC410-M8-F6-WY80AD	WY80AD	1	●	T27	7427570	80,40
TC410-M10-C0-WY80AD	WY80AD	1	●	T27	7427505	75,60
TC410-M10-C6-WY80AD	WY80AD	1	●	T27	7427547	96,50
TC410-M10-CL-WY80AD	WY80AD	1	●	T27	7427535	75,60
TC410-M10-E0-WY80AD	WY80AD	1	●	T27	7427520	75,60
TC410-M10-E6-WY80AD	WY80AD	1	●	T27	7427562	96,50
TC410-M10-F0-WY80AD	WY80AD	1	●	T27	7427529	75,60
TC410-M10-F6-WY80AD	WY80AD	1	●	T27	7427571	96,50
TC410-M12-L0-WY80AD	WY80AD	1	●	T27	7427506	88,10
TC410-M12-L6-WY80AD	WY80AD	1	●	T27	7427548	113,00
TC410-M12-LL-WY80AD	WY80AD	1	●	T27	7427536	88,10
TC410-M12-N0-WY80AD	WY80AD	1	●	T27	7427521	88,10
TC410-M12-N6-WY80AD	WY80AD	1	●	T27	7427563	113,00
TC410-M12-P6-WY80AD	WY80AD	1	●	T27	7427572	113,00
TC410-M14-L0-WY80AD	WY80AD	1	●	T27	7427507	101,00
TC410-M14-L6-WY80AD	WY80AD	1	●	T27	7427549	132,00
TC410-M16-L0-WY80AD	WY80AD	1	●	T27	7427508	113,00
TC410-M16-L6-WY80AD	WY80AD	1	●	T27	7427550	149,00
TC410-M16-LL-WY80AD	WY80AD	1	●	T27	7427537	113,00
TC410-M18-L0-WY80AD	WY80AD	1	●	T27	7427509	132,00
TC410-M18-L6-WY80AD	WY80AD	1	●	T27	7427551	178,00
TC410-M20-L0-WY80AD	WY80AD	1	●	T27	7427510	151,00
TC410-M20-L6-WY80AD	WY80AD	1	●	T27	7427552	203,00
TC410-M24-L0-WY80AD	WY80AD	1	●	T27	7427511	201,00
TC410-M24-L6-WY80AD	WY80AD	1	●	T27	7427553	278,00
TC410-M4X0.5-C6-WY80AD	WY80AD	1	●	T27	7427573	57,50
TC410-M5X0.5-C6-WY80AD	WY80AD	1	●	T27	7427574	61,90
TC410-M6X0.5-C6-WY80AD	WY80AD	1	●	T27	7427575	70,80
TC410-M6X0.75-C6-WY80AD	WY80AD	1	●	T27	7427576	70,80
TC410-M7X0.75-C6-WY80AD	WY80AD	1	●	T27	7427577	79,60
TC410-M8X0.5-L6-WY80AD	WY80AD	1	●	T27	7427578	88,50
TC410-M8X0.75-L6-WY80AD	WY80AD	1	●	T27	7427579	88,50
TC410-M8X1-L6-WY80AD	WY80AD	1	●	T27	7427580	88,50
TC410-M10X1-L6-WY80AD	WY80AD	1	●	T27	7427581	106,00
TC410-M10X1-NE-WY80AD	WY80AD	1	●	T27	7427598	109,00
TC410-M10X1.25-L6-WY80AD	WY80AD	1	●	T27	7427583	106,00
TC410-M12X1-L6-WY80AD	WY80AD	1	●	T27	7427582	124,00
TC410-M12X1.25-L6-WY80AD	WY80AD	1	●	T27	7427584	124,00
TC410-M12X1.5-L6-WY80AD	WY80AD	1	●	T27	7427585	124,00
TC410-M12X1.5-NE-WY80AD	WY80AD	1	●	T27	7427599	127,00
TC410-M14X1.5-L6-WY80AD	WY80AD	1	●	T27	7427586	145,00
TC410-M14X1.5-NE-WY80AD	WY80AD	1	●	T27	7427600	149,00
TC410-M16X1.5-L6-WY80AD	WY80AD	1	●	T27	7427587	163,00
TC410-M16X1.5-NE-WY80AD	WY80AD	1	●	T27	7427601	168,00
TC410-M18X1.5-L6-WY80AD	WY80AD	1	●	T27	7427588	195,00
TC410-M20X1.5-L6-WY80AD	WY80AD	1	●	T27	7427589	223,00
TC410-M20X2-L6-WY80AD	WY80AD	1	●	T27	7427592	223,00
TC410-M22X1.5-L6-WY80AD	WY80AD	1	●	T27	7427590	261,00
TC410-M24X1.5-L6-WY80AD	WY80AD	1	●	T27	7427591	305,00
TC410-M24X2-L6-WY80AD	WY80AD	1	●	T27	7427593	305,00
TC410-M27X1.5-L6-WY80AD	WY80AD	1	●	T27	7427594	420,00
TC410-M27X2-L6-WY80AD	WY80AD	1	●	T27	7427595	420,00
TC410-M30X1.5-L6-WY80AD	WY80AD	1	●	T27	7427596	496,00
TC410-M30X2-L6-WY80AD	WY80AD	1	●	T27	7427597	496,00
TC410-UNC2-C6-WY80AD	WY80AD	1	●	T27	7427602	64,80
TC410-UNC4-C6-WY80AD	WY80AD	1	●	T27	7427603	56,80
TC410-UNC6-C6-WY80AD	WY80AD	1	●	T27	7427604	52,90
TC410-UNC8-C6-WY80AD	WY80AD	1	●	T27	7427605	52,30
TC410-UNC10-C6-WY80AD	WY80AD	1	●	T27	7427606	56,30
TC410-UNC1/4-C6-WY80AD	WY80AD	1	●	T27	7427607	64,30
TC410-UNC5/16-C6-WY80AD	WY80AD	1	●	T27	7427608	80,40
TC410-UNC3/8-C6-WY80AD	WY80AD	1	●	T27	7427609	96,50
TC410-UNC7/16-L6-WY80AD	WY80AD	1	●	T27	7427610	105,00
TC410-UNC1/2-L6-WY80AD	WY80AD	1	●	T27	7427611	116,00

Bezeichnung / Designation	Sorte / Grade	VE / US		Disc. Gr.	Article No.	EURO Stück / piece
TC410-UNC5/8-L6-WY80AD	WY80AD	1	●	T27	7427612	149,00
TC410-UNF2-C6-WY80AD	WY80AD	1	●	T27	7427613	71,30
TC410-UNF4-C6-WY80AD	WY80AD	1	●	T27	7427614	62,50
TC410-UNF6-C6-WY80AD	WY80AD	1	●	T27	7427615	58,20
TC410-UNF8-C6-WY80AD	WY80AD	1	●	T27	7427616	57,50
TC410-UNF10-C6-WY80AD	WY80AD	1	●	T27	7427617	61,90
TC410-UNF1/4-C6-WY80AD	WY80AD	1	●	T27	7427618	70,80
TC410-UNF5/16-C6-WY80AD	WY80AD	1	●	T27	7427619	88,50
TC410-UNF3/8-C6-WY80AD	WY80AD	1	●	T27	7427620	106,00
TC410-UNF7/16-L6-WY80AD	WY80AD	1	●	T27	7427621	115,00
TC410-UNF1/2-L6-WY80AD	WY80AD	1	●	T27	7427622	127,00
TC410-UNF5/8-L6-WY80AD	WY80AD	1	●	T27	7427623	163,00
TC410.M10-C6-WY80AD	WY80AD	1	●	T27	7427629	96,50
TC410.M12-L6-WY80AD	WY80AD	1	●	T27	7427630	113,00
TC410.M16-L6-WY80AD	WY80AD	1	●	T27	7427631	149,00
TC410.M20-L6-WY80AD	WY80AD	1	●	T27	7427632	203,00
TC410.M3-C6-WY80AD	WY80AD	1	●	T27	7427624	54,80
TC410.M4-C6-WY80AD	WY80AD	1	●	T27	7427625	52,30
TC410.M5-C6-WY80AD	WY80AD	1	●	T27	7427626	56,30
TC410.M6-C6-WY80AD	WY80AD	1	●	T27	7427627	64,30
TC410.M8-C6-WY80AD	WY80AD	1	●	T27	7427628	80,40
TC410.UNC1/2-L6-WY80AD	WY80AD	1	●	T27	7427643	116,00
TC410.UNC1/4-C6-WY80AD	WY80AD	1	●	T27	7427639	64,30
TC410.UNC10-C6-WY80AD	WY80AD	1	●	T27	7427638	56,30
TC410.UNC2-C6-WY80AD	WY80AD	1	●	T27	7427633	64,80
TC410.UNC3/4-L6-WY80AD	WY80AD	1	●	T27	7427646	190,00
TC410.UNC3/8-C6-WY80AD	WY80AD	1	●	T27	7427641	96,50
TC410.UNC4-C6-WY80AD	WY80AD	1	●	T27	7427634	56,80
TC410.UNC5-C6-WY80AD	WY80AD	1	●	T27	7427635	54,80
TC410.UNC5/16-C6-WY80AD	WY80AD	1	●	T27	7427640	80,40
TC410.UNC5/8-L6-WY80AD	WY80AD	1	●	T27	7427645	149,00
TC410.UNC6-C6-WY80AD	WY80AD	1	●	T27	7427636	52,90
TC410.UNC7/16-L6-WY80AD	WY80AD	1	●	T27	7427642	105,00
TC410.UNC7/8-L6-WY80AD	WY80AD	1	●	T27	7567813	237,00
TC410.UNC8-C6-WY80AD	WY80AD	1	●	T27	7427637	52,30
TC410.UNC9/16-L6-WY80AD	WY80AD	1	●	T27	7427644	132,00
TC410.UNF0-C6-WY80AD	WY80AD	1	●	T27	7427647	86,00
TC410.UNF1-C6-WY80AD	WY80AD	1	●	T27	7427648	79,70
TC410.UNF1/2-L6-WY80AD	WY80AD	1	●	T27	7427656	127,00
TC410.UNF1/4-C6-WY80AD	WY80AD	1	●	T27	7427652	70,80
TC410.UNF10-C6-WY80AD	WY80AD	1	●	T27	7427651	61,90
TC410.UNF3/4-L6-WY80AD	WY80AD	1	●	T27	7427659	209,00
TC410.UNF3/8-C6-WY80AD	WY80AD	1	●	T27	7427654	106,00
TC410.UNF5/16-C6-WY80AD	WY80AD	1	●	T27	7427653	88,50
TC410.UNF5/8-L6-WY80AD	WY80AD	1	●	T27	7427658	163,00
TC410.UNF6-C6-WY80AD	WY80AD	1	●	T27	7427649	58,20
TC410.UNF7/16-L6-WY80AD	WY80AD	1	●	T27	7427655	115,00
TC410.UNF7/8-L6-WY80AD	WY80AD	1	●	T27	7427660	261,00
TC410.UNF8-C6-WY80AD	WY80AD	1	●	T27	7427650	57,50
TC410.UNF9/16-L6-WY80AD	WY80AD	1	●	T27	7427657	145,00
TC420-M2-C0-WW60AD	WW60AD	1	●	T37	7427243	68,10
TC420-M2-C0-WW60BA	WW60BA	1	●	T37	7427276	74,90
TC420-M2-C6-WW60AD	WW60AD	1	●	T37	7427323	82,50
TC420-M2-C6-WW60BA	WW60BA	1	●	T37	7427344	90,80
TC420-M2-CE-WW60AD	WW60AD	1	●	T37	7427394	82,50
TC420-M2-CE-WW60BA	WW60BA	1	●	T37	7427406	90,80
TC420-M2-E0-WW60AD	WW60AD	1	●	T37	7427288	68,10
TC420-M2-E0-WW60BA	WW60BA	1	●	T37	7427300	74,90
TC420-M2-E6-WW60AD	WW60AD	1	●	T37	7427373	82,50
TC420-M2-E6-WW60BA	WW60BA	1	●	T37	7427385	90,80
TC420-M2-EE-WW60AD	WW60AD	1	●	T37	7427418	82,50
TC420-M2-EE-WW60BA	WW60BA	1	●	T37	7427429	90,80
TC420-M2.5-C0-WW60AD	WW60AD	1	●	T37	7427244	58,70
TC420-M2.5-C0-WW60BA	WW60BA	1	●	T37	7427277	64,60
TC420-M2.5-C6-WW60AD	WW60AD	1	●	T37	7427324	71,10
TC420-M2.5-C6-WW60BA	WW60BA	1	●	T37	7427345	78,20
TC420-M2.5-CE-WW60AD	WW60AD	1	●	T37	7427395	71,10
TC420-M2.5-CE-WW60BA	WW60BA	1	●	T37	7427407	78,20
TC420-M2.5-E0-WW60AD	WW60AD	1	●	T37	7427289	58,70
TC420-M2.5-E0-WW60BA	WW60BA	1	●	T37	7427301	64,60

Bezeichnung / Designation	Sorte / Grade	VE / US		Disc. Gr.	Article No.	EURO Stück / piece
TC420-M2.5-E6-WW60AD	WW60AD	1	●	T37	7427374	71,10
TC420-M2.5-E6-WW60BA	WW60BA	1	●	T37	7427386	78,20
TC420-M2.5-EE-WW60AD	WW60AD	1	●	T37	7427419	71,10
TC420-M2.5-EE-WW60BA	WW60BA	1	●	T37	7427430	78,20
TC420-M3-C0-WW60AD	WW60AD	1	●	T37	7427245	53,00
TC420-M3-C0-WW60BA	WW60BA	1	●	T37	7427278	58,30
TC420-M3-C6-WW60AD	WW60AD	1	●	T37	7427325	66,00
TC420-M3-C6-WW60BA	WW60BA	1	●	T37	7427346	72,50
TC420-M3-CE-WW60AD	WW60AD	1	●	T37	7427396	66,00
TC420-M3-CE-WW60BA	WW60BA	1	●	T37	7427408	72,50
TC420-M3-CH-WW60AD	WW60AD	1	●	T37	7427336	66,00
TC420-M3-E0-WW60AD	WW60AD	1	●	T37	7427290	53,00
TC420-M3-E0-WW60BA	WW60BA	1	●	T37	7427302	58,30
TC420-M3-E6-WW60AD	WW60AD	1	●	T37	7427375	66,00
TC420-M3-E6-WW60BA	WW60BA	1	●	T37	7427387	72,50
TC420-M3-EE-WW60AD	WW60AD	1	●	T37	7427420	66,00
TC420-M3-EE-WW60BA	WW60BA	1	●	T37	7427431	72,50
TC420-M3.5-C0-WW60AD	WW60AD	1	●	T37	7427246	51,10
TC420-M3.5-C0-WW60BA	WW60BA	1	●	T37	7427279	56,20
TC420-M3.5-C6-WW60AD	WW60AD	1	●	T37	7427326	63,60
TC420-M3.5-C6-WW60BA	WW60BA	1	●	T37	7427347	70,00
TC420-M3.5-CE-WW60AD	WW60AD	1	●	T37	7427397	63,60
TC420-M3.5-E0-WW60AD	WW60AD	1	●	T37	7427291	51,10
TC420-M3.5-E6-WW60AD	WW60AD	1	●	T37	7427376	63,60
TC420-M3.5-E6-WW60BA	WW60BA	1	●	T37	7427388	70,00
TC420-M4-C0-WW60AD	WW60AD	1	●	T37	7427247	49,20
TC420-M4-C0-WW60BA	WW60BA	1	●	T37	7427280	54,10
TC420-M4-C6-WW60AD	WW60AD	1	●	T37	7427327	62,90
TC420-M4-C6-WW60BA	WW60BA	1	●	T37	7427348	69,20
TC420-M4-CE-WW60AD	WW60AD	1	●	T37	7427398	62,90
TC420-M4-CE-WW60BA	WW60BA	1	●	T37	7427410	69,20
TC420-M4-CH-WW60AD	WW60AD	1	●	T37	7427337	62,90
TC420-M4-E0-WW60AD	WW60AD	1	●	T37	7427292	49,20
TC420-M4-E0-WW60BA	WW60BA	1	●	T37	7427304	54,10
TC420-M4-E6-WW60AD	WW60AD	1	●	T37	7427377	62,90
TC420-M4-E6-WW60BA	WW60BA	1	●	T37	7427389	69,20
TC420-M4-EE-WW60AD	WW60AD	1	●	T37	7427421	62,90
TC420-M4-EE-WW60BA	WW60BA	1	●	T37	7427432	69,20
TC420-M5-C0-WW60AD	WW60AD	1	●	T37	7427248	53,00
TC420-M5-C0-WW60BA	WW60BA	1	●	T37	7427281	58,30
TC420-M5-C1-WW60AD	WW60AD	1	●	T37	7427309	78,90
TC420-M5-C1-WW60BA	WW60BA	1	●	T37	7427316	86,80
TC420-M5-C2-WW60AD	WW60AD	1	●	T37	7427357	88,10
TC420-M5-C2-WW60BA	WW60BA	1	●	T37	7427365	96,80
TC420-M5-C6-WW60AD	WW60AD	1	●	T37	7427328	67,70
TC420-M5-C6-WW60BA	WW60BA	1	●	T37	7427349	74,50
TC420-M5-CE-WW60AD	WW60AD	1	●	T37	7427399	67,70
TC420-M5-CE-WW60BA	WW60BA	1	●	T37	7427411	74,50
TC420-M5-CF-WW60AD	WW60AD	1	●	T37	7958062	78,90
TC420-M5-CF-WW60BA	WW60BA	1	●	T37	7958068	86,80
TC420-M5-CH-WW60AD	WW60AD	1	●	T37	7427338	67,70
TC420-M5-E0-WW60AD	WW60AD	1	●	T37	7427293	53,00
TC420-M5-E0-WW60BA	WW60BA	1	●	T37	7427305	58,30
TC420-M5-E6-WW60AD	WW60AD	1	●	T37	7427378	67,70
TC420-M5-E6-WW60BA	WW60BA	1	●	T37	7427390	74,50
TC420-M5-EE-WW60AD	WW60AD	1	●	T37	7427422	67,70
TC420-M5-EE-WW60BA	WW60BA	1	●	T37	7427433	74,50
TC420-M5-EF-WW60AD	WW60AD	1	●	T37	7958094	78,90
TC420-M5-EF-WW60BA	WW60BA	1	●	T37	7958098	86,80
TC420-M6-C0-WW60AD	WW60AD	1	●	T37	7427249	60,60
TC420-M6-C0-WW60BA	WW60BA	1	●	T37	7427282	66,60
TC420-M6-C1-WW60AD	WW60AD	1	●	T37	7427310	90,10
TC420-M6-C1-WW60BA	WW60BA	1	●	T37	7427317	99,10
TC420-M6-C2-WW60AD	WW60AD	1	●	T37	7427358	101,00
TC420-M6-C2-WW60BA	WW60BA	1	●	T37	7427366	111,00
TC420-M6-C6-WW60AD	WW60AD	1	●	T37	7427329	77,40
TC420-M6-C6-WW60BA	WW60BA	1	●	T37	7427350	85,20
TC420-M6-CE-WW60AD	WW60AD	1	●	T37	7427400	77,40
TC420-M6-CE-WW60BA	WW60BA	1	●	T37	7427412	85,20
TC420-M6-CF-WW60AD	WW60AD	1	●	T37	7958063	90,10

Bezeichnung / Designation	Sorte / Grade	VE / US		Disc. Gr.	Article No.	EURO Stück / piece
TC420-M6-CF-WW60BA	WW60BA	1	●	T37	7958069	99,10
TC420-M6-CH-WW60AD	WW60AD	1	●	T37	7427339	77,40
TC420-M6-E0-WW60AD	WW60AD	1	●	T37	7427294	60,60
TC420-M6-E0-WW60BA	WW60BA	1	●	T37	7427306	66,60
TC420-M6-E6-WW60AD	WW60AD	1	●	T37	7427379	77,40
TC420-M6-E6-WW60BA	WW60BA	1	●	T37	7427391	85,20
TC420-M6-EE-WW60AD	WW60AD	1	●	T37	7427423	77,40
TC420-M6-EE-WW60BA	WW60BA	1	●	T37	7427434	85,20
TC420-M6-EF-WW60AD	WW60AD	1	●	T37	7958095	90,10
TC420-M6-EF-WW60BA	WW60BA	1	●	T37	7958099	99,10
TC420-M8-C0-WW60AD	WW60AD	1	●	T37	7427270	75,70
TC420-M8-C0-WW60BA	WW60BA	1	●	T37	7427283	83,30
TC420-M8-C1-WW60AD	WW60AD	1	●	T37	7427311	113,00
TC420-M8-C1-WW60BA	WW60BA	1	●	T37	7427318	124,00
TC420-M8-C2-WW60AD	WW60AD	1	●	T37	7427359	126,00
TC420-M8-C2-WW60BA	WW60BA	1	●	T37	7427367	138,00
TC420-M8-C6-WW60AD	WW60AD	1	●	T37	7427330	96,80
TC420-M8-C6-WW60BA	WW60BA	1	●	T37	7427351	106,00
TC420-M8-CE-WW60AD	WW60AD	1	●	T37	7427401	96,80
TC420-M8-CE-WW60BA	WW60BA	1	●	T37	7427413	106,00
TC420-M8-CF-WW60AD	WW60AD	1	●	T37	7958064	113,00
TC420-M8-CF-WW60BA	WW60BA	1	●	T37	7958090	124,00
TC420-M8-E0-WW60AD	WW60AD	1	●	T37	7427295	75,70
TC420-M8-E0-WW60BA	WW60BA	1	●	T37	7427307	83,30
TC420-M8-E6-WW60AD	WW60AD	1	●	T37	7427380	96,80
TC420-M8-E6-WW60BA	WW60BA	1	●	T37	7427392	106,00
TC420-M8-EE-WW60AD	WW60AD	1	●	T37	7427424	96,80
TC420-M8-EE-WW60BA	WW60BA	1	●	T37	7427435	106,00
TC420-M8-EF-WW60AD	WW60AD	1	●	T37	7958096	113,00
TC420-M8-EF-WW60BA	WW60BA	1	●	T37	7958100	124,00
TC420-M8-LH-WW60AD	WW60AD	1	●	T37	7427340	96,80
TC420-M10-C0-WW60AD	WW60AD	1	●	T37	7427271	90,90
TC420-M10-C0-WW60BA	WW60BA	1	●	T37	7427284	100,00
TC420-M10-C1-WW60AD	WW60AD	1	●	T37	7427312	135,00
TC420-M10-C1-WW60BA	WW60BA	1	●	T37	7427319	149,00
TC420-M10-C2-WW60AD	WW60AD	1	●	T37	7427360	151,00
TC420-M10-C2-WW60BA	WW60BA	1	●	T37	7427368	166,00
TC420-M10-C6-WW60AD	WW60AD	1	●	T37	7427331	116,00
TC420-M10-C6-WW60BA	WW60BA	1	●	T37	7427352	128,00
TC420-M10-CE-WW60AD	WW60AD	1	●	T37	7427402	116,00
TC420-M10-CE-WW60BA	WW60BA	1	●	T37	7427414	128,00
TC420-M10-CF-WW60AD	WW60AD	1	●	T37	7958065	135,00
TC420-M10-CF-WW60BA	WW60BA	1	●	T37	7958091	149,00
TC420-M10-E0-WW60AD	WW60AD	1	●	T37	7427296	90,90
TC420-M10-E0-WW60BA	WW60BA	1	●	T37	7427308	100,00
TC420-M10-E6-WW60AD	WW60AD	1	●	T37	7427381	116,00
TC420-M10-E6-WW60BA	WW60BA	1	●	T37	7427393	128,00
TC420-M10-EE-WW60AD	WW60AD	1	●	T37	7427425	116,00
TC420-M10-EE-WW60BA	WW60BA	1	●	T37	7427436	128,00
TC420-M10-EF-WW60AD	WW60AD	1	●	T37	7958097	135,00
TC420-M10-EF-WW60BA	WW60BA	1	●	T37	7958101	149,00
TC420-M10-LH-WW60AD	WW60AD	1	●	T37	7427341	116,00
TC420-M12-L0-WW60AD	WW60AD	1	●	T37	7427272	106,00
TC420-M12-L0-WW60BA	WW60BA	1	●	T37	7427285	117,00
TC420-M12-L1-WW60AD	WW60AD	1	●	T37	7427313	158,00
TC420-M12-L1-WW60BA	WW60BA	1	●	T37	7427320	173,00
TC420-M12-L2-WW60AD	WW60AD	1	●	T37	7427361	176,00
TC420-M12-L2-WW60BA	WW60BA	1	●	T37	7427369	194,00
TC420-M12-L6-WW60AD	WW60AD	1	●	T37	7427332	135,00
TC420-M12-L6-WW60BA	WW60BA	1	●	T37	7427353	149,00
TC420-M12-LE-WW60AD	WW60AD	1	●	T37	7427403	135,00
TC420-M12-LE-WW60BA	WW60BA	1	●	T37	7427415	149,00
TC420-M12-LF-WW60AD	WW60AD	1	●	T37	7958066	158,00
TC420-M12-LH-WW60AD	WW60AD	1	●	T37	7427342	135,00
TC420-M12-N0-WW60AD	WW60AD	1	●	T37	7427297	106,00
TC420-M12-N6-WW60AD	WW60AD	1	●	T37	7427382	135,00
TC420-M12-NE-WW60AD	WW60AD	1	●	T37	7427426	135,00
TC420-M12-NF-WW60AD	WW60AD	1	●	T37	7958092	158,00
TC420-M14-L0-WW60AD	WW60AD	1	●	T37	7427273	121,00
TC420-M14-L0-WW60BA	WW60BA	1	■	T37	7427286*	133,00

Bezeichnung / Designation	Sorte / Grade	VE / US		Disc. Gr.	Article No.	EURO Stück / piece
TC420-M14-L1-WW60AD	WW60AD	1	●	T37	7427314	180,00
TC420-M14-L1-WW60BA	WW60BA	1	●	T37	7427321	198,00
TC420-M14-L2-WW60AD	WW60AD	1	●	T37	7427362	206,00
TC420-M14-L2-WW60BA	WW60BA	1	●	T37	7427370	227,00
TC420-M14-L6-WW60AD	WW60AD	1	●	T37	7427333	159,00
TC420-M14-L6-WW60BA	WW60BA	1	●	T37	7427354	175,00
TC420-M14-LE-WW60AD	WW60AD	1	●	T37	7427404	159,00
TC420-M14-N0-WW60AD	WW60AD	1	■	T37	7427298*	121,00
TC420-M14-N6-WW60AD	WW60AD	1	●	T37	7427383	159,00
TC420-M14-NE-WW60AD	WW60AD	1	●	T37	7427427	159,00
TC420-M16-L0-WW60AD	WW60AD	1	●	T37	7427274	136,00
TC420-M16-L0-WW60BA	WW60BA	1	■	T37	7427287*	150,00
TC420-M16-L1-WW60AD	WW60AD	1	●	T37	7427315	203,00
TC420-M16-L1-WW60BA	WW60BA	1	●	T37	7427322	223,00
TC420-M16-L2-WW60AD	WW60AD	1	●	T37	7427363	232,00
TC420-M16-L2-WW60BA	WW60BA	1	●	T37	7427371	256,00
TC420-M16-L6-WW60AD	WW60AD	1	●	T37	7427334	179,00
TC420-M16-L6-WW60BA	WW60BA	1	●	T37	7427355	197,00
TC420-M16-LE-WW60AD	WW60AD	1	●	T37	7427405	179,00
TC420-M16-LE-WW60BA	WW60BA	1	●	T37	7427417	197,00
TC420-M16-LF-WW60AD	WW60AD	1	●	T37	7958067	203,00
TC420-M16-LH-WW60AD	WW60AD	1	●	T37	7427343	179,00
TC420-M16-N0-WW60AD	WW60AD	1	●	T37	7427299	136,00
TC420-M16-N6-WW60AD	WW60AD	1	●	T37	7427384	179,00
TC420-M16-NE-WW60AD	WW60AD	1	●	T37	7427428	179,00
TC420-M16-NF-WW60AD	WW60AD	1	●	T37	7958093	203,00
TC420-M20-L0-WW60AD	WW60AD	1	●	T37	7427275	182,00
TC420-M20-L2-WW60AD	WW60AD	1	●	T37	7427364	318,00
TC420-M20-L2-WW60BA	WW60BA	1	●	T37	7427372	349,00
TC420-M20-L6-WW60AD	WW60AD	1	●	T37	7427335	244,00
TC420-M20-L6-WW60BA	WW60BA	1	●	T37	7427356	269,00
TC420-M24-L2-WW60AD	WW60AD	1	●	T37	7958102	496,00
TC420-M24-L2-WW60BA	WW60BA	1	●	T37	7958103	546,00
TC420-M8X1-L1-WW60AD	WW60AD	1	●	T37	7427437	124,00
TC420-M8X1-L2-WW60AD	WW60AD	1	●	T37	7427466	138,00
TC420-M8X1-L2-WW60BA	WW60BA	1	●	T37	7427472	152,00
TC420-M8X1-L6-WW60AD	WW60AD	1	●	T37	7427442	106,00
TC420-M8X1-L6-WW60BA	WW60BA	1	●	T37	7427448	117,00
TC420-M8X1-N6-WW60AD	WW60AD	1	●	T37	7427454	106,00
TC420-M8X1-N6-WW60BA	WW60BA	1	●	T37	7427460	117,00
TC420-M10X1-L1-WW60AD	WW60AD	1	●	T37	7427438	149,00
TC420-M10X1-L2-WW60AD	WW60AD	1	●	T37	7427467	166,00
TC420-M10X1-L2-WW60BA	WW60BA	1	●	T37	7427473	183,00
TC420-M10X1-L6-WW60AD	WW60AD	1	●	T37	7427443	128,00
TC420-M10X1-L6-WW60BA	WW60BA	1	●	T37	7427449	140,00
TC420-M10X1-N6-WW60AD	WW60AD	1	●	T37	7427455	128,00
TC420-M10X1-N6-WW60BA	WW60BA	1	●	T37	7427461	140,00
TC420-M12X1-L2-WW60AD	WW60AD	1	●	T37	7427468	194,00
TC420-M12X1-L2-WW60BA	WW60BA	1	●	T37	7427474	213,00
TC420-M12X1-L6-WW60AD	WW60AD	1	●	T37	7427444	149,00
TC420-M12X1-L6-WW60BA	WW60BA	1	●	T37	7427450	164,00
TC420-M12X1-N6-WW60AD	WW60AD	1	●	T37	7427456	149,00
TC420-M12X1-N6-WW60BA	WW60BA	1	●	T37	7427462	164,00
TC420-M12X1.5-L1-WW60AD	WW60AD	1	●	T37	7427440	173,00
TC420-M12X1.5-L2-WW60AD	WW60AD	1	●	T37	7427469	194,00
TC420-M12X1.5-L2-WW60BA	WW60BA	1	●	T37	7427475	213,00
TC420-M12X1.5-L6-WW60AD	WW60AD	1	●	T37	7427445	149,00
TC420-M12X1.5-L6-WW60BA	WW60BA	1	●	T37	7427451	164,00
TC420-M12X1.5-N6-WW60AD	WW60AD	1	●	T37	7427457	149,00
TC420-M14X1-L6-WW60AD	WW60AD	1	●	T37	7448826	175,00
TC420-M14X1-L6-WW60BA	WW60BA	1	■	T37	7448828*	192,00
TC420-M14X1.25-L6-WW60AD	WW60AD	1	■	T37	7448827*	175,00
TC420-M14X1.5-L1-WW60AD	WW60AD	1	●	T37	7427441	198,00
TC420-M14X1.5-L2-WW60AD	WW60AD	1	●	T37	7427470	227,00
TC420-M14X1.5-L2-WW60BA	WW60BA	1	●	T37	7427476	250,00
TC420-M14X1.5-L6-WW60AD	WW60AD	1	●	T37	7427446	175,00
TC420-M14X1.5-L6-WW60BA	WW60BA	1	●	T37	7427452	192,00
TC420-M14X1.5-N6-WW60AD	WW60AD	1	●	T37	7427458	175,00
TC420-M14X1.5-N6-WW60BA	WW60BA	1	●	T37	7427464	192,00
TC420-M16X1.5-L2-WW60AD	WW60AD	1	●	T37	7427471	256,00

Bezeichnung / Designation	Sorte / Grade	VE / US		Disc. Gr.	Article No.	EURO Stück / piece
TC420-M16X1.5-L2-WW60BA	WW60BA	1	●	T37	7427477	281,00
TC420-M16X1.5-L6-WW60AD	WW60AD	1	●	T37	7427447	197,00
TC420-M16X1.5-L6-WW60BA	WW60BA	1	●	T37	7427453	216,00
TC420-M16X1.5-N6-WW60AD	WW60AD	1	●	T37	7427459	197,00
TC420-M16X1.5-N6-WW60BA	WW60BA	1	●	T37	7427465	216,00
TC420.UNC1/2-L2-WW60AD	WW60AD	1	●	T37	7625363	181,00
TC420.UNC1/4-C2-WW60AD	WW60AD	1	●	T37	7625360	101,00
TC420.UNC10-C2-WW60AD	WW60AD	1	●	T37	7732845	88,10
TC420.UNC3/4-L2-WW60AD	WW60AD	1	●	T37	7732846	318,00
TC420.UNC3/8-C2-WW60AD	WW60AD	1	●	T37	7625362	151,00
TC420.UNC5/16-C2-WW60AD	WW60AD	1	●	T37	7625361	126,00
TC420.UNC5/8-L2-WW60AD	WW60AD	1	●	T37	7625364	232,00
TC420.UNF1/2-L2-WW60AD	WW60AD	1	●	T37	7732960	194,00
TC420.UNF1/4-C2-WW60AD	WW60AD	1	●	T37	7625365	111,00
TC420.UNF10-C2-WW60AD	WW60AD	1	●	T37	7732847	96,80
TC420.UNF3/4-L2-WW60AD	WW60AD	1	●	T37	7732963	349,00
TC420.UNF3/8-C2-WW60AD	WW60AD	1	●	T37	7625367	166,00
TC420.UNF5/16-C2-WW60AD	WW60AD	1	●	T37	7625366	138,00
TC420.UNF5/8-L2-WW60AD	WW60AD	1	■	T37	7732962*	256,00
TC420.UNF7/16-L2-WW60AD	WW60AD	1	●	T37	7732849	180,00
TC420.UNF9/16-L2-WW60AD	WW60AD	1	●	T37	7732961	221,00
TC430-M3-C0-WW60EL	WW60EL	1	●	T37	7958104	63,20
TC430-M3-C6-WW60EL	WW60EL	1	●	T37	7427790	75,90
TC430-M4-C0-WW60EL	WW60EL	1	●	T37	7958105	58,70
TC430-M4-C6-WW60EL	WW60EL	1	●	T37	7427791	72,30
TC430-M5-C0-WW60EL	WW60EL	1	●	T37	7958106	63,20
TC430-M5-C1-WW60EL	WW60EL	1	●	T37	7958110	94,00
TC430-M5-C2-WW60EL	WW60EL	1	●	T37	7958116	105,00
TC430-M5-C6-WW60EL	WW60EL	1	●	T37	7427792	77,90
TC430-M6-C0-WW60EL	WW60EL	1	●	T37	7958107	72,20
TC430-M6-C1-WW60EL	WW60EL	1	●	T37	7958111	107,00
TC430-M6-C2-WW60EL	WW60EL	1	●	T37	7958117	120,00
TC430-M6-C6-WW60EL	WW60EL	1	●	T37	7427793	89,00
TC430-M8-C0-WW60EL	WW60EL	1	●	T37	7958108	90,20
TC430-M8-C1-WW60AD	WW60AD	1	●	T37	7427776	122,00
TC430-M8-C1-WW60EL	WW60EL	1	●	T37	7958112	134,00
TC430-M8-C2-WW60AD	WW60AD	1	●	T37	7427762	136,00
TC430-M8-C2-WW60EL	WW60EL	1	●	T37	7958118	150,00
TC430-M8-C6-WW60AD	WW60AD	1	●	T37	7427674	105,00
TC430-M8-C6-WW60EL	WW60EL	1	●	T37	7427794	111,00
TC430-M8-E6-WW60AD	WW60AD	1	●	T37	7427758	105,00
TC430-M10-C0-WW60EL	WW60EL	1	●	T37	7958109	108,00
TC430-M10-C1-WW60AD	WW60AD	1	●	T37	7427777	146,00
TC430-M10-C1-WW60EL	WW60EL	1	●	T37	7958113	161,00
TC430-M10-C2-WW60AD	WW60AD	1	●	T37	7427763	164,00
TC430-M10-C2-WW60EL	WW60EL	1	●	T37	7958119	180,00
TC430-M10-C6-WW60AD	WW60AD	1	●	T37	7427675	126,00
TC430-M10-C6-WW60EL	WW60EL	1	●	T37	7427795	134,00
TC430-M10-E6-WW60AD	WW60AD	1	●	T37	7427759	126,00
TC430-M12-L1-WW60AD	WW60AD	1	●	T37	7427778	171,00
TC430-M12-L1-WW60EL	WW60EL	1	●	T37	7958114	188,00
TC430-M12-L2-WW60AD	WW60AD	1	●	T37	7427764	191,00
TC430-M12-L2-WW60EL	WW60EL	1	●	T37	7958120	210,00
TC430-M12-L6-WW60AD	WW60AD	1	●	T37	7427676	147,00
TC430-M12-L6-WW60EL	WW60EL	1	●	T37	7427796	156,00
TC430-M12-N6-WW60AD	WW60AD	1	●	T37	7427760	147,00
TC430-M16-L1-WW60AD	WW60AD	1	●	T37	7427779	220,00
TC430-M16-L1-WW60EL	WW60EL	1	●	T37	7958115	242,00
TC430-M16-L2-WW60AD	WW60AD	1	●	T37	7427765	252,00
TC430-M16-L2-WW60EL	WW60EL	1	●	T37	7958121	277,00
TC430-M16-L6-WW60AD	WW60AD	1	●	T37	7427677	194,00
TC430-M16-N6-WW60AD	WW60AD	1	●	T37	7427761	194,00
TC430-M8X1-L1-WW60EL	WW60EL	1	■	T37	7958130*	148,00
TC430-M8X1-L2-WW60AD	WW60AD	1	●	T37	7427766	150,00
TC430-M8X1-L2-WW60EL	WW60EL	1	●	T37	7958122	165,00
TC430-M8X1-L6-WW60AD	WW60AD	1	●	T37	7427678	115,00
TC430-M8X1-L6-WW60EL	WW60EL	1	●	T37	7427797	122,00
TC430-M10X1-L1-WW60EL	WW60EL	1	■	T37	7958131*	177,00
TC430-M10X1-L2-WW60AD	WW60AD	1	●	T37	7427767	180,00
TC430-M10X1-L2-WW60EL	WW60EL	1	●	T37	7958123	198,00

Bezeichnung / Designation	Sorte / Grade	VE / US		Disc. Gr.	Article No.	EURO Stück / piece
TC430-M10X1-L6-WW60EL	WW60EL	1	●	T37	7427798	147,00
TC430-M10X1.25-L1-WW60AD	WW60AD	1	■	T37	7427782*	161,00
TC430-M10X1.25-L1-WW60EL	WW60EL	1	■	T37	7958132*	177,00
TC430-M10X1.25-L2-WW60AD	WW60AD	1	●	T37	7427768	180,00
TC430-M10X1.25-L2-WW60EL	WW60EL	1	●	T37	7958124	198,00
TC430-M10X1.25-L6-WW60AD	WW60AD	1	●	T37	7427750	138,00
TC430-M10X1.25-L6-WW60EL	WW60EL	1	●	T37	7427799	147,00
TC430-M12X1-L1-WW60EL	WW60EL	1	■	T37	7958133*	207,00
TC430-M12X1-L2-WW60EL	WW60EL	1	●	T37	7958125	213,00
TC430-M12X1.25-L1-WW60AD	WW60AD	1	●	T37	7427784	188,00
TC430-M12X1.25-L1-WW60EL	WW60EL	1	●	T37	7958134	207,00
TC430-M12X1.25-L2-WW60AD	WW60AD	1	●	T37	7427770	210,00
TC430-M12X1.25-L2-WW60EL	WW60EL	1	●	T37	7958126	231,00
TC430-M12X1.25-L6-WW60AD	WW60AD	1	●	T37	7427752	161,00
TC430-M12X1.25-L6-WW60EL	WW60EL	1	●	T37	7427801	171,00
TC430-M12X1.5-L1-WW60AD	WW60AD	1	●	T37	7427785	188,00
TC430-M12X1.5-L1-WW60EL	WW60EL	1	■	T37	7958135*	207,00
TC430-M12X1.5-L2-WW60AD	WW60AD	1	●	T37	7427771	210,00
TC430-M12X1.5-L2-WW60EL	WW60EL	1	●	T37	7958127	231,00
TC430-M12X1.5-L6-WW60AD	WW60AD	1	■	T37	7427753*	161,00
TC430-M12X1.5-L6-WW60EL	WW60EL	1	●	T37	7427802	171,00
TC430-M14X1.5-L1-WW60AD	WW60AD	1	●	T37	7427788	215,00
TC430-M14X1.5-L1-WW60EL	WW60EL	1	■	T37	7958136*	236,00
TC430-M14X1.5-L2-WW60AD	WW60AD	1	●	T37	7427774	246,00
TC430-M14X1.5-L2-WW60EL	WW60EL	1	●	T37	7958128	271,00
TC430-M14X1.5-L6-WW60AD	WW60AD	1	■	T37	7427756*	189,00
TC430-M14X1.5-L6-WW60EL	WW60EL	1	●	T37	7427805	201,00
TC430-M16X1.5-L1-WW60AD	WW60AD	1	●	T37	7427789	248,00
TC430-M16X1.5-L1-WW60EL	WW60EL	1	●	T37	7958137	273,00
TC430-M16X1.5-L2-WW60AD	WW60AD	1	●	T37	7427775	277,00
TC430-M16X1.5-L2-WW60EL	WW60EL	1	●	T37	7958129	305,00
TC430-M16X1.5-L6-WW60AD	WW60AD	1	●	T37	7427757	213,00
TC430-M16X1.5-L6-WW60EL	WW60EL	1	●	T37	7427806	226,00
TC440-M2-C6-WY80AD	WY80AD	1	●	T37	7994910	82,50
TC440-M2.5-C6-WY80AD	WY80AD	1	●	T37	7994911	71,10
TC440-M3-C6-WY80AD	WY80AD	1	●	T37	7994912	66,00
TC440-M4-C6-WY80AD	WY80AD	1	●	T37	7994913	62,90
TC440-M5-C1-WY80AD	WY80AD	1	●	T37	7994919	78,90
TC440-M5-C2-WY80AD	WY80AD	1	●	T37	7994924	88,10
TC440-M5-C6-WY80AD	WY80AD	1	●	T37	7994914	67,70
TC440-M6-C1-WY80AD	WY80AD	1	●	T37	7994920	90,10
TC440-M6-C2-WY80AD	WY80AD	1	●	T37	7994925	101,00
TC440-M6-C6-WY80AD	WY80AD	1	●	T37	7994915	77,40
TC440-M8-C1-WY80AD	WY80AD	1	●	T37	7994921	113,00
TC440-M8-C2-WY80AD	WY80AD	1	●	T37	7994926	126,00
TC440-M8-C6-WY80AD	WY80AD	1	●	T37	7994916	96,80
TC440-M10-C1-WY80AD	WY80AD	1	●	T37	7994922	135,00
TC440-M10-C2-WY80AD	WY80AD	1	●	T37	7994927	151,00
TC440-M10-C6-WY80AD	WY80AD	1	●	T37	7994917	116,00
TC440-M12-L1-WY80AD	WY80AD	1	●	T37	7994923	158,00
TC440-M12-L2-WY80AD	WY80AD	1	●	T37	7994928	176,00
TC440-M12-L6-WY80AD	WY80AD	1	●	T37	7994918	135,00
TC440-M8X1-L2-WY80AD	WY80AD	1	●	T37	7994929	138,00
TC440-M10X1-L2-WY80AD	WY80AD	1	●	T37	7994930	166,00
TC440-M12X1.5-L2-WY80AD	WY80AD	1	●	T37	7994931	194,00
TC440-M14X1.5-L2-WY80AD	WY80AD	1	●	T37	7994932	227,00
TC440-M16X1.5-L2-WY80AD	WY80AD	1	●	T37	7994933	256,00
TC440-M18X1.5-L2-WY80AD	WY80AD	1	●	T37	8187472	298,00
TC470-M3-C0-WG20EL	WG20EL	1	●	TS1	7726100	228,00
TC470-M4-C0-WG20EL	WG20EL	1	●	TS1	7726101	220,00
TC470-M4-C6-WG20EL	WG20EL	1	●	TS1	7726110	235,00
TC470-M5-C0-WG20EL	WG20EL	1	●	TS1	7726102	237,00
TC470-M5-C5-WG20EL	WG20EL	1	●	TS1	7874152	329,00
TC470-M5-C6-WG20EL	WG20EL	1	●	TS1	7726111	259,00
TC470-M5-CE-WG20EL	WG20EL	1	■	TS1	7726119*	329,00
TC470-M6-C0-WG20EL	WG20EL	1	●	TS1	7726103	270,00
TC470-M6-C2-WG20EL	WG20EL	1	●	TS1	7726115	436,00
TC470-M6-C5-WG20EL	WG20EL	1	●	TS1	7726106	382,00
TC470-M6-C6-WG20EL	WG20EL	1	●	TS1	7726112	296,00
TC470-M6-CE-WG20EL	WG20EL	1	●	TS1	7726120	382,00

Bezeichnung / Designation	Sorte / Grade	VE / US		Disc. Gr.	Article No.	EURO Stück / piece
TC470-M8-C0-WG20EL	WG20EL	1	●	TS1	7726104	338,00
TC470-M8-C2-WG20EL	WG20EL	1	●	TS1	7726116	556,00
TC470-M8-C5-WG20EL	WG20EL	1	●	TS1	7726107	482,00
TC470-M8-C6-WG20EL	WG20EL	1	●	TS1	7726113	370,00
TC470-M8-CE-WG20EL	WG20EL	1	●	TS1	7726121	482,00
TC470-M10-C0-WG20EL	WG20EL	1	●	TS1	7726105	405,00
TC470-M10-C2-WG20EL	WG20EL	1	●	TS1	7726117	684,00
TC470-M10-C5-WG20EL	WG20EL	1	●	TS1	7726108	593,00
TC470-M10-C6-WG20EL	WG20EL	1	●	TS1	7726114	456,00
TC470-M10-CE-WG20EL	WG20EL	1	●	TS1	7726122	593,00
TC470-M10X1-L5-WG20EL	WG20EL	1	■	TS1	7726123*	652,00
TC470-M12X1.5-L5-WG20EL	WG20EL	1	■	TS1	7726124*	779,00
TC470-M16X1.5-L2-WG20EL	WG20EL	1	●	TS1	7726129	1.156,00
TC470-M16X1.5-L5-WG20EL	WG20EL	1	■	TS1	7726126*	1.002,00
TC610-G1/8-W0-WJ30RC	WJ30RC	1	●	TSM	6580381	224,00
TC610-G1/8-W1-WJ30RC	WJ30RC	1	●	TSM	6580454	291,00
TC610-G1/4-W0-WJ30RC	WJ30RC	1	●	TSM	6580382	336,00
TC610-G1/4-W1-WJ30RC	WJ30RC	1	●	TSM	6580455	437,00
TC610-G3/8-W0-WJ30RC	WJ30RC	1	●	TSM	6580383	489,00
TC610-G3/8-W1-WJ30RC	WJ30RC	1	●	TSM	6580456	635,00
TC610-G1/2-W0-WJ30RC	WJ30RC	1	●	TSM	6580384	527,00
TC610-G1/2-W1-WJ30RC	WJ30RC	1	●	TSM	6580457	685,00
TC610-G1X20-W0-WJ30RC	WJ30RC	1	●	TSM	6580386	702,00
TC610-G1X20-W1-WJ30RC	WJ30RC	1	●	TSM	6580459	913,00
TC610-M6-W0-WJ30RC	WJ30RC	1	●	TSM	6580294	197,00
TC610-M6-W1-WB10RD	WB10RD	1	●	TSM	6589039	256,00
TC610-M6-W1-WJ30RC	WJ30RC	1	●	TSM	6580387	256,00
TC610-M8-W0-WJ30RC	WJ30RC	1	●	TSM	6580295	225,00
TC610-M8-W1-WB10RD	WB10RD	1	●	TSM	6589120	292,00
TC610-M8-W1-WJ30RC	WJ30RC	1	●	TSM	6580388	292,00
TC610-M10-W0-WJ30RC	WJ30RC	1	●	TSM	6580296	281,00
TC610-M10-W1-WB10RD	WB10RD	1	●	TSM	6589121	366,00
TC610-M10-W1-WJ30RC	WJ30RC	1	●	TSM	6580389	366,00
TC610-M12-W0-WJ30RC	WJ30RC	1	●	TSM	6580297	338,00
TC610-M12-W1-WB10RD	WB10RD	1	●	TSM	6589122	439,00
TC610-M12-W1-WJ30RC	WJ30RC	1	●	TSM	6580390	439,00
TC610-M14-W0-WJ30RC	WJ30RC	1	●	TSM	6580298	338,00
TC610-M14-W1-WJ30RC	WJ30RC	1	●	TSM	6580391	439,00
TC610-M16-W0-WJ30RC	WJ30RC	1	●	TSM	6580299	412,00
TC610-M16-W1-WB10RD	WB10RD	1	●	TSM	6589124	536,00
TC610-M16-W1-WJ30RC	WJ30RC	1	●	TSM	6580392	536,00
TC610-M20-W0-WJ30RC	WJ30RC	1	●	TSM	6580320	554,00
TC610-M20-W1-WJ30RC	WJ30RC	1	●	TSM	6580393	721,00
TC610-M24-W0-WJ30RC	WJ30RC	1	●	TSM	6580321	693,00
TC610-M24-W1-WJ30RC	WJ30RC	1	●	TSM	6580394	901,00
TC610-M6X0.5-W0-WJ30RC	WJ30RC	1	●	TSM	6580330	227,00
TC610-M6X0.5-W1-WJ30RC	WJ30RC	1	●	TSM	6580403	295,00
TC610-M8X0.75-W0-WJ30RC	WJ30RC	1	●	TSM	6580331	259,00
TC610-M8X0.75-W1-WB10RD	WB10RD	1	●	TSM	6589135	337,00
TC610-M8X0.75-W1-WJ30RC	WJ30RC	1	●	TSM	6580404	337,00
TC610-M8X1-W0-WJ30RC	WJ30RC	1	●	TSM	6580332	247,00
TC610-M8X1-W1-WJ30RC	WJ30RC	1	●	TSM	6580405	322,00
TC610-M10X0.5-W0-WJ30RC	WJ30RC	1	●	TSM	6580333	354,00
TC610-M10X0.5-W1-WJ30RC	WJ30RC	1	●	TSM	6580406	460,00
TC610-M10X1-W0-WJ30RC	WJ30RC	1	●	TSM	6580334	324,00
TC610-M10X1-W1-WB10RD	WB10RD	1	●	TSM	6589137	421,00
TC610-M10X1-W1-WJ30RC	WJ30RC	1	●	TSM	6580407	421,00
TC610-M12X1-W0-WJ30RC	WJ30RC	1	●	TSM	6580335	407,00
TC610-M12X1-W1-WB10RD	WB10RD	1	●	TSM	6589138	529,00
TC610-M12X1-W1-WJ30RC	WJ30RC	1	●	TSM	6580408	529,00
TC610-M12X1.25-W0-WJ30RC	WJ30RC	1	●	TSM	6580336	407,00
TC610-M12X1.25-W1-WJ30RC	WJ30RC	1	●	TSM	6580409	529,00
TC610-M12X1.5-W0-WJ30RC	WJ30RC	1	●	TSM	6580337	389,00
TC610-M12X1.5-W1-WB10RD	WB10RD	1	●	TSM	6589139	506,00
TC610-M12X1.5-W1-WJ30RC	WJ30RC	1	●	TSM	6580410	506,00
TC610-M14X1-W0-WJ30RC	WJ30RC	1	●	TSM	6580338	495,00
TC610-M14X1-W1-WB10RD	WB10RD	1	●	TSM	6589140	643,00
TC610-M14X1-W1-WJ30RC	WJ30RC	1	●	TSM	6580411	643,00
TC610-M14X1.5-W0-WJ30RC	WJ30RC	1	●	TSM	6580339	474,00
TC610-M14X1.5-W1-WB10RD	WB10RD	1	●	TSM	6589141	617,00

Bezeichnung / Designation	Sorte / Grade	VE / US		Disc. Gr.	Article No.	EURO Stück / piece
TC610-M14X1.5-W1-WJ30RC	WJ30RC	1	●	TSM	6580412	617,00
TC610-M16X1-W0-WJ30RC	WJ30RC	1	●	TSM	6580340	566,00
TC610-M16X1-W1-WJ30RC	WJ30RC	1	●	TSM	6580413	735,00
TC610-M16X1.5-W0-WJ30RC	WJ30RC	1	●	TSM	6580341	542,00
TC610-M16X1.5-W1-WB10RD	WB10RD	1	●	TSM	6589143	705,00
TC610-M16X1.5-W1-WJ30RC	WJ30RC	1	●	TSM	6580414	705,00
TC610-M18X1-W0-WJ30RC	WJ30RC	1	●	TSM	6580342	663,00
TC610-M18X1-W1-WJ30RC	WJ30RC	1	●	TSM	6580415	862,00
TC610-M18X1.5-W0-WJ30RC	WJ30RC	1	●	TSM	6580343	636,00
TC610-M18X1.5-W1-WB10RD	WB10RD	1	●	TSM	6589144	827,00
TC610-M18X1.5-W1-WJ30RC	WJ30RC	1	●	TSM	6580416	827,00
TC610-M20X2-W0-WJ30RC	WJ30RC	1	●	TSM	6580344	610,00
TC610-M20X2-W1-WB10RD	WB10RD	1	●	TSM	6589145	793,00
TC610-M20X2-W1-WJ30RC	WJ30RC	1	●	TSM	6580417	793,00
TC610-M24X2-W0-WJ30RC	WJ30RC	1	●	TSM	6580345	849,00
TC610-M24X2-W1-WJ30RC	WJ30RC	1	●	TSM	6580418	1.103,00
TC610-UNC1-W0-WJ30RC	WJ30RC	1	●	TSM	6580356	619,00
TC610-UNC1-W1-WJ30RC	WJ30RC	1	●	TSM	6580429	804,00
TC610-UNC1/4-W0-WJ30RC	WJ30RC	1	●	TSM	6580347	188,00
TC610-UNC1/4-W1-WJ30RC	WJ30RC	1	●	TSM	6580420	244,00
TC610-UNC5/16-W0-WJ30RC	WJ30RC	1	●	TSM	6580348	225,00
TC610-UNC5/16-W1-WJ30RC	WJ30RC	1	●	TSM	6580421	292,00
TC610-UNC3/8-W0-WJ30RC	WJ30RC	1	●	TSM	6580349	281,00
TC610-UNC3/8-W1-WJ30RC	WJ30RC	1	●	TSM	6580422	366,00
TC610-UNC7/16-W0-WJ30RC	WJ30RC	1	●	TSM	6580350	281,00
TC610-UNC7/16-W1-WJ30RC	WJ30RC	1	●	TSM	6580423	366,00
TC610-UNC1/2-W0-WJ30RC	WJ30RC	1	●	TSM	6580352	338,00
TC610-UNC1/2-W1-WJ30RC	WJ30RC	1	●	TSM	6580425	439,00
TC610-UNC9/16-W0-WJ30RC	WJ30RC	1	●	TSM	6580351	338,00
TC610-UNC9/16-W1-WJ30RC	WJ30RC	1	●	TSM	6580424	439,00
TC610-UNC5/8-W0-WJ30RC	WJ30RC	1	●	TSM	6580353	412,00
TC610-UNC5/8-W1-WJ30RC	WJ30RC	1	●	TSM	6580426	536,00
TC610-UNC3/4-W0-WJ30RC	WJ30RC	1	●	TSM	6580354	471,00
TC610-UNC3/4-W1-WJ30RC	WJ30RC	1	●	TSM	6580427	613,00
TC610-UNC7/8-W1-WJ30RC	WJ30RC	1	●	TSM	6580428	689,00
TC610-UNF10-W0-WJ30RC	WJ30RC	1	●	TSM	6580369	199,00
TC610-UNF10-W1-WJ30RC	WJ30RC	1	●	TSM	6580442	259,00
TC610-UNF1/4-W0-WJ30RC	WJ30RC	1	●	TSM	6580370	217,00
TC610-UNF1/4-W1-WJ30RC	WJ30RC	1	●	TSM	6580443	282,00
TC610-UNF5/16-W0-WJ30RC	WJ30RC	1	●	TSM	6580371	247,00
TC610-UNF5/16-W1-WJ30RC	WJ30RC	1	●	TSM	6580444	322,00
TC610-UNF7/16-W0-WJ30RC	WJ30RC	1	●	TSM	6580372	309,00
TC610-UNF7/16-W1-WJ30RC	WJ30RC	1	●	TSM	6580445	402,00
TC610-UNF9/16-W0-WJ30RC	WJ30RC	1	●	TSM	6580373	389,00
TC610-UNF9/16-W1-WJ30RC	WJ30RC	1	●	TSM	6580446	506,00
TC610-UNF3/4-W0-WJ30RC	WJ30RC	1	●	TSM	6580374	542,00
TC610-UNF3/4-W1-WJ30RC	WJ30RC	1	●	TSM	6580447	705,00
TC611-M6-W0-WJ30RC	WJ30RC	1	●	TSM	6580322	197,00
TC611-M6-W1-WB10RD	WB10RD	1	●	TSM	6589127	256,00
TC611-M6-W1-WJ30RC	WJ30RC	1	●	TSM	6580395	256,00
TC611-M8-W0-WJ30RC	WJ30RC	1	●	TSM	6580323	225,00
TC611-M8-W1-WB10RD	WB10RD	1	●	TSM	6589128	292,00
TC611-M8-W1-WJ30RC	WJ30RC	1	●	TSM	6580396	292,00
TC611-M10-W0-WJ30RC	WJ30RC	1	●	TSM	6580324	281,00
TC611-M10-W1-WB10RD	WB10RD	1	●	TSM	6589129	366,00
TC611-M10-W1-WJ30RC	WJ30RC	1	●	TSM	6580397	366,00
TC611-M12-W0-WJ30RC	WJ30RC	1	●	TSM	6580325	338,00
TC611-M12-W1-WB10RD	WB10RD	1	●	TSM	6589130	439,00
TC611-M12-W1-WJ30RC	WJ30RC	1	●	TSM	6580398	439,00
TC611-M14-W0-WJ30RC	WJ30RC	1	●	TSM	6580326	338,00
TC611-M14-W1-WJ30RC	WJ30RC	1	●	TSM	6580399	439,00
TC611-M16-W0-WJ30RC	WJ30RC	1	●	TSM	6580327	412,00
TC611-M16-W1-WB10RD	WB10RD	1	●	TSM	6589132	536,00
TC611-M16-W1-WJ30RC	WJ30RC	1	●	TSM	6580400	536,00
TC611-M20-W0-WJ30RC	WJ30RC	1	●	TSM	6580328	554,00
TC611-M20-W1-WB10RD	WB10RD	1	●	TSM	6589133	721,00
TC611-M20-W1-WJ30RC	WJ30RC	1	●	TSM	6580401	721,00
TC611-M24-W0-WJ30RC	WJ30RC	1	●	TSM	6580329	693,00
TC611-M24-W1-WJ30RC	WJ30RC	1	●	TSM	6580402	901,00
TC611-UNC1-W0-WJ30RC	WJ30RC	1	●	TSM	6580367	619,00

Bezeichnung / Designation	Sorte / Grade	VE / US		Disc. Gr.	Article No.	EURO Stück / piece
TC611-UNC1-W1-WJ30RC	WJ30RC	1	●	TSM	6580440	804,00
TC611-UNC1/4-W0-WJ30RC	WJ30RC	1	●	TSM	6580358	188,00
TC611-UNC1/4-W1-WJ30RC	WJ30RC	1	●	TSM	6580431	244,00
TC611-UNC5/16-W0-WJ30RC	WJ30RC	1	●	TSM	6580359	225,00
TC611-UNC5/16-W1-WJ30RC	WJ30RC	1	●	TSM	6580432	292,00
TC611-UNC3/8-W0-WJ30RC	WJ30RC	1	●	TSM	6580360	281,00
TC611-UNC3/8-W1-WJ30RC	WJ30RC	1	●	TSM	6580433	366,00
TC611-UNC7/16-W0-WJ30RC	WJ30RC	1	●	TSM	6580361	281,00
TC611-UNC7/16-W1-WJ30RC	WJ30RC	1	●	TSM	6580434	366,00
TC611-UNC1/2-W0-WJ30RC	WJ30RC	1	●	TSM	6580363	338,00
TC611-UNC1/2-W1-WJ30RC	WJ30RC	1	●	TSM	6580436	439,00
TC611-UNC9/16-W0-WJ30RC	WJ30RC	1	●	TSM	6580362	338,00
TC611-UNC9/16-W1-WJ30RC	WJ30RC	1	●	TSM	6580435	439,00
TC611-UNC5/8-W0-WJ30RC	WJ30RC	1	●	TSM	6580364	412,00
TC611-UNC5/8-W1-WJ30RC	WJ30RC	1	●	TSM	6580437	536,00
TC611-UNC3/4-W0-WJ30RC	WJ30RC	1	●	TSM	6580365	471,00
TC611-UNC3/4-W1-WJ30RC	WJ30RC	1	●	TSM	6580438	613,00
TC611-UNC7/8-W0-WJ30RC	WJ30RC	1	●	TSM	6580366	530,00
TC611-UNC7/8-W1-WJ30RC	WJ30RC	1	●	TSM	6580439	689,00
TC611-UNF10-W0-WJ30RC	WJ30RC	1	●	TSM	6580375	199,00
TC611-UNF10-W1-WJ30RC	WJ30RC	1	●	TSM	6580448	259,00
TC611-UNF1/4-W0-WJ30RC	WJ30RC	1	●	TSM	6580376	217,00
TC611-UNF1/4-W1-WJ30RC	WJ30RC	1	●	TSM	6580449	282,00
TC611-UNF5/16-W0-WJ30RC	WJ30RC	1	●	TSM	6580377	247,00
TC611-UNF5/16-W1-WJ30RC	WJ30RC	1	●	TSM	6580450	322,00
TC611-UNF7/16-W0-WJ30RC	WJ30RC	1	●	TSM	6580378	309,00
TC611-UNF7/16-W1-WJ30RC	WJ30RC	1	●	TSM	6580451	402,00
TC611-UNF9/16-W0-WJ30RC	WJ30RC	1	●	TSM	6580379	389,00
TC611-UNF9/16-W1-WJ30RC	WJ30RC	1	●	TSM	6580452	506,00
TC611-UNF3/4-W0-WJ30RC	WJ30RC	1	●	TSM	6580380	542,00
TC611-UNF3/4-W1-WJ30RC	WJ30RC	1	●	TSM	6580453	705,00
TC620-M4-A1D-WB10TJ	WB10TJ	1	●	TSM	7611355	213,00
TC620-M4-A1E-WB10TJ	WB10TJ	1	●	TSM	7611463	223,00
TC620-M5-A1D-WB10TJ	WB10TJ	1	●	TSM	7611356	198,00
TC620-M5-A1E-WB10TJ	WB10TJ	1	●	TSM	7611464	207,00
TC620-M6-A1D-WB10TJ	WB10TJ	1	●	TSM	7611357	224,00
TC620-M6-A1E-WB10TJ	WB10TJ	1	●	TSM	7611465	235,00
TC620-M8-A1D-WB10TJ	WB10TJ	1	●	TSM	7611358	256,00
TC620-M8-A1E-WB10TJ	WB10TJ	1	●	TSM	7611466	268,00
TC620-M8-W5D-WB10TJ	WB10TJ	1	●	TSM	8117565	269,00
TC620-M8-W5E-WB10TJ	WB10TJ	1	●	TSM	8117602	281,00
TC620-M10-A1D-WB10TJ	WB10TJ	1	●	TSM	7611359	320,00
TC620-M10-A1E-WB10TJ	WB10TJ	1	●	TSM	7611467	335,00
TC620-M10-W5D-WB10TJ	WB10TJ	1	●	TSM	8117566	336,00
TC620-M10-W5E-WB10TJ	WB10TJ	1	●	TSM	8117603	352,00
TC620-M12-A1D-WB10TJ	WB10TJ	1	●	TSM	7611450	384,00
TC620-M12-A1E-WB10TJ	WB10TJ	1	●	TSM	7611468	402,00
TC620-M12-W5D-WB10TJ	WB10TJ	1	●	TSM	8117567	403,00
TC620-M12-W5E-WB10TJ	WB10TJ	1	●	TSM	8117604	422,00
TC620-M14-A1D-WB10TJ	WB10TJ	1	●	TSM	7611451	416,00
TC620-M14-A1E-WB10TJ	WB10TJ	1	●	TSM	7611469	436,00
TC620-M14-W5D-WB10TJ	WB10TJ	1	●	TSM	8117568	437,00
TC620-M14-W5E-WB10TJ	WB10TJ	1	●	TSM	8117605	457,00
TC620-M16-A1D-WB10TJ	WB10TJ	1	●	TSM	7611452	503,00
TC620-M16-A1E-WB10TJ	WB10TJ	1	●	TSM	7611470	527,00
TC620-M16-W5D-WB10TJ	WB10TJ	1	●	TSM	8117569	528,00
TC620-M16-W5E-WB10TJ	WB10TJ	1	●	TSM	8117606	553,00
TC620-M18-W5D-WB10TJ	WB10TJ	1	●	TSM	8117600	563,00
TC620-M18-W5E-WB10TJ	WB10TJ	1	●	TSM	8117607	590,00
TC620-M20-A1D-WB10TJ	WB10TJ	1	●	TSM	7611453	603,00
TC620-M20-A1E-WB10TJ	WB10TJ	1	●	TSM	7611471	632,00
TC620-M20-W5D-WB10TJ	WB10TJ	1	●	TSM	8117601	633,00
TC620-M20-W5E-WB10TJ	WB10TJ	1	●	TSM	8117608	664,00
TC620-M4X0.5-W1D-WB10TJ	WB10TJ	1	●	TSM	8117631	246,00
TC620-M6X0.75-W1D-WB10TJ	WB10TJ	1	●	TSM	8117632	246,00
TC620-M8X1-W5D-WB10TJ	WB10TJ	1	●	TSM	8117633	296,00
TC620-M10X1-W5D-WB10TJ	WB10TJ	1	●	TSM	8117634	387,00
TC620-M12X1-W5D-WB10TJ	WB10TJ	1	●	TSM	8117635	486,00
TC620-M12X1.5-W5D-WB10TJ	WB10TJ	1	●	TSM	8117638	464,00
TC620-M14X1.5-W5D-WB10TJ	WB10TJ	1	●	TSM	8117639	542,00

Bezeichnung / Designation	Sorte / Grade	VE / US		Disc. Gr.	Article No.	EURO Stück / piece
TC620-M16X1.5-W5D-WB10TJ	WB10TJ	1	●	TSM	8117670	647,00
TC620-M18X1.5-W5D-WB10TJ	WB10TJ	1	●	TSM	8117671	728,00
TC620-M20X1.5-W5D-WB10TJ	WB10TJ	1	●	TSM	8117672	823,00
TC620-UNC8-A1D-WB10TJ	WB10TJ	1	●	TSM	7611455	213,00
TC620-UNC8-W1E-WB10TJ	WB10TJ	1	●	TSM	8154195	223,00
TC620-UNC10-A1D-WB10TJ	WB10TJ	1	●	TSM	7611456	198,00
TC620-UNC10-W1E-WB10TJ	WB10TJ	1	●	TSM	8154196	207,00
TC620-UNC1/4-A1D-WB10TJ	WB10TJ	1	●	TSM	7611457	213,00
TC620-UNC1/4-W1E-WB10TJ	WB10TJ	1	●	TSM	8154197	223,00
TC620-UNC5/16-A1D-WB10TJ	WB10TJ	1	●	TSM	7611458	256,00
TC620-UNC5/16-W5D-WB10TJ	WB10TJ	1	●	TSM	8117609	269,00
TC620-UNC5/16-W5E-WB10TJ	WB10TJ	1	●	TSM	8117614	281,00
TC620-UNC3/8-A1D-WB10TJ	WB10TJ	1	●	TSM	7611459	320,00
TC620-UNC3/8-W5D-WB10TJ	WB10TJ	1	●	TSM	8117610	336,00
TC620-UNC3/8-W5E-WB10TJ	WB10TJ	1	●	TSM	8117615	352,00
TC620-UNC1/2-A1D-WB10TJ	WB10TJ	1	●	TSM	7611460	384,00
TC620-UNC1/2-W5D-WB10TJ	WB10TJ	1	●	TSM	8117611	403,00
TC620-UNC1/2-W5E-WB10TJ	WB10TJ	1	●	TSM	8117616	422,00
TC620-UNC5/8-A1D-WB10TJ	WB10TJ	1	●	TSM	7611461	448,00
TC620-UNC5/8-W5D-WB10TJ	WB10TJ	1	●	TSM	8117612	470,00
TC620-UNC5/8-W5E-WB10TJ	WB10TJ	1	●	TSM	8117617	493,00
TC620-UNC3/4-A1D-WB10TJ	WB10TJ	1	●	TSM	7611462	603,00
TC620-UNC3/4-W5D-WB10TJ	WB10TJ	1	●	TSM	8117613	633,00
TC620-UNC3/4-W5E-WB10TJ	WB10TJ	1	●	TSM	8117618	664,00
TC620-UNC7/8-A1D-WB10TJ	WB10TJ	1	●	TSM	7859963	683,00
TC620-UNF10-W1D-WB10TJ	WB10TJ	1	●	TSM	8117673	235,00
TC620-UNF1/4-W1D-WB10TJ	WB10TJ	1	●	TSM	8117674	246,00
TC620-UNF5/16-W5D-WB10TJ	WB10TJ	1	●	TSM	8117675	296,00
TC620-UNF3/8-W5D-WB10TJ	WB10TJ	1	●	TSM	8117676	387,00
TC620-UNF7/16-W5D-WB10TJ	WB10TJ	1	●	TSM	8117677	426,00
TC620-UNF1/2-W5D-WB10TJ	WB10TJ	1	●	TSM	8117678	503,00
TC620-UNF9/16-W5D-WB10TJ	WB10TJ	1	●	TSM	8117679	542,00
TC620-UNF5/8-W5D-WB10TJ	WB10TJ	1	●	TSM	8117680	647,00
TC620-UNF3/4-W5D-WB10TJ	WB10TJ	1	●	TSM	8117681	728,00
TC620-M10X1.25W5D-WB10TJ	WB10TJ	1	●	TSM	8117636	387,00
TC620-M12X1.25W5D-WB10TJ	WB10TJ	1	●	TSM	8117637	464,00
TC630-SUNF5/16A0D-WB10RA	WB10RA	1	●	TSM	8120208	267,00
TC630-SUNF3/8-A0D-WB10RA	WB10RA	1	●	TSM	8120209	321,00
TC630-SUNF10-A0D-WB10RA	WB10RA	1	●	TSM	8120206	214,00
TC630-SUNF1/4-A0D-WB10RA	WB10RA	1	●	TSM	8120207	267,00
TC630-M1.2-A0D-WB10TJ	WB10TJ	1	●	TSM	8120095	175,00
TC630-M1.2-A0F-WB10TJ	WB10TJ	1	●	TSM	8120136	175,00
TC630-M1.4-A0D-WB10TJ	WB10TJ	1	●	TSM	8120096	175,00
TC630-M1.4-A0F-WB10TJ	WB10TJ	1	●	TSM	8120137	175,00
TC630-M1.6-A0D-WB10TJ	WB10TJ	1	●	TSM	8120097	175,00
TC630-M1.6-A0F-WB10TJ	WB10TJ	1	●	TSM	8120138	175,00
TC630-M1.8-A0D-WB10TJ	WB10TJ	1	●	TSM	8120098	175,00
TC630-M1.8-A0F-WB10TJ	WB10TJ	1	●	TSM	8120139	175,00
TC630-M2-A0D-WB10TJ	WB10TJ	1	●	TSM	8120099	184,00
TC630-M2-A0F-WB10TJ	WB10TJ	1	●	TSM	8120140	184,00
TC630-M2.2-A0D-WB10TJ	WB10TJ	1	●	TSM	8120120	184,00
TC630-M2.2-A0F-WB10TJ	WB10TJ	1	●	TSM	8120141	184,00
TC630-M2.5-A0D-WB10TJ	WB10TJ	1	●	TSM	8120121	184,00
TC630-M2.5-A0F-WB10TJ	WB10TJ	1	●	TSM	8120142	184,00
TC630-M3-A0D-WB10TJ	WB10TJ	1	●	TSM	8120122	184,00
TC630-M3-A0F-WB10TJ	WB10TJ	1	●	TSM	8120143	184,00
TC630-M3-A1H-WB10TJ	WB10TJ	1	●	TSM	8445161	239,00
TC630-M3.5-A0D-WB10TJ	WB10TJ	1	●	TSM	8120123	156,00
TC630-M3.5-A0F-WB10TJ	WB10TJ	1	●	TSM	8120144	156,00
TC630-M4-A0D-WB10TJ	WB10TJ	1	●	TSM	8120124	156,00
TC630-M4-A0F-WB10TJ	WB10TJ	1	●	TSM	8120145	156,00
TC630-M4-A5H-WB10TJ	WB10TJ	1	●	TSM	8438627	203,00
TC630-M4.5-A0D-WB10TJ	WB10TJ	1	●	TSM	8120125	150,00
TC630-M4.5-A0F-WB10TJ	WB10TJ	1	●	TSM	8120146	150,00
TC630-M5-A0D-WB10TJ	WB10TJ	1	●	TSM	8120126	156,00
TC630-M5-A0F-WB10TJ	WB10TJ	1	●	TSM	8120147	156,00
TC630-M5-A1D-WB10TJ	WB10TJ	1	●	TSM	8120131	203,00
TC630-M5-A1F-WB10TJ	WB10TJ	1	●	TSM	8120150	203,00
TC630-M5-A5H-WB10TJ	WB10TJ	1	●	TSM	8438628	203,00
TC630-M6-A0D-WB10TJ	WB10TJ	1	●	TSM	8120127	156,00

Bezeichnung / Designation	Sorte / Grade	VE / US		Disc. Gr.	Article No.	EURO Stück / piece
TC630-M6-A0F-WB10TJ	WB10TJ	1	●	TSM	8120148	156,00
TC630-M6-A1D-WB10TJ	WB10TJ	1	●	TSM	8120132	203,00
TC630-M6-A1F-WB10TJ	WB10TJ	1	●	TSM	8120151	203,00
TC630-M6-A5H-WB10TJ	WB10TJ	1	●	TSM	8438629	203,00
TC630-M8-A0D-WB10TJ	WB10TJ	1	●	TSM	8120128	223,00
TC630-M8-A0F-WB10TJ	WB10TJ	1	●	TSM	8120149	223,00
TC630-M8-A1D-WB10TJ	WB10TJ	1	●	TSM	8120133	290,00
TC630-M8-A1F-WB10TJ	WB10TJ	1	●	TSM	8120152	290,00
TC630-M8-A5F-WB10TJ	WB10TJ	1	●	TSM	8120153	290,00
TC630-M8-A5H-WB10TJ	WB10TJ	1	●	TSM	8120159	290,00
TC630-M10-A0D-WB10TJ	WB10TJ	1	●	TSM	8120129	245,00
TC630-M10-A1D-WB10TJ	WB10TJ	1	●	TSM	8120134	319,00
TC630-M10-A5F-WB10TJ	WB10TJ	1	●	TSM	8120154	319,00
TC630-M10-A5H-WB10TJ	WB10TJ	1	●	TSM	8120160	319,00
TC630-M12-A0D-WB10TJ	WB10TJ	1	●	TSM	8120130	267,00
TC630-M12-A1D-WB10TJ	WB10TJ	1	●	TSM	8120135	348,00
TC630-M12-A5F-WB10TJ	WB10TJ	1	●	TSM	8120155	348,00
TC630-M12-A5H-WB10TJ	WB10TJ	1	●	TSM	8120161	348,00
TC630-M14-A5F-WB10TJ	WB10TJ	1	●	TSM	8120156	405,00
TC630-M16-A5F-WB10TJ	WB10TJ	1	●	TSM	8120157	463,00
TC630-M16-A5H-WB10TJ	WB10TJ	1	●	TSM	8120162	463,00
TC630-M18-A5F-WB10TJ	WB10TJ	1	●	TSM	8120158	521,00
TC630-M5X0.5-A0E-WB10TJ	WB10TJ	1	●	TSM	8120163	172,00
TC630-M6X0.75-A0E-WB10TJ	WB10TJ	1	●	TSM	8120164	196,00
TC630-M10X1-A0E-WB10TJ	WB10TJ	1	●	TSM	8120165	270,00
TC630-M14X1-A0E-WB10TJ	WB10TJ	1	●	TSM	8120167	343,00
TC630-M14X1.5-A0E-WB10TJ	WB10TJ	1	●	TSM	8120168	343,00
TC630-UNC1-A0D-WB10TJ	WB10TJ	1	●	TSM	8120169	175,00
TC630-UNC1-A0F-WB10TJ	WB10TJ	1	●	TSM	8120177	175,00
TC630-UNC2-A0D-WB10TJ	WB10TJ	1	●	TSM	8120170	184,00
TC630-UNC2-A0F-WB10TJ	WB10TJ	1	●	TSM	8120178	184,00
TC630-UNC3-A0F-WB10TJ	WB10TJ	1	●	TSM	8120179	184,00
TC630-UNC4-A0D-WB10TJ	WB10TJ	1	●	TSM	8120171	184,00
TC630-UNC4-A0F-WB10TJ	WB10TJ	1	●	TSM	8120180	184,00
TC630-UNC6-A0D-WB10TJ	WB10TJ	1	●	TSM	8120172	156,00
TC630-UNC6-A0F-WB10TJ	WB10TJ	1	●	TSM	8120181	156,00
TC630-UNC8-A0D-WB10TJ	WB10TJ	1	●	TSM	8120173	150,00
TC630-UNC8-A0F-WB10TJ	WB10TJ	1	●	TSM	8120182	150,00
TC630-UNC10-A0D-WB10TJ	WB10TJ	1	●	TSM	8120174	150,00
TC630-UNC10-A0F-WB10TJ	WB10TJ	1	●	TSM	8120183	150,00
TC630-UNC1/4-A0F-WB10TJ	WB10TJ	1	●	TSM	8120184	178,00
TC630-UNC1/4-A1D-WB10TJ	WB10TJ	1	●	TSM	8120175	232,00
TC630-UNC5/16-A0F-WB10TJ	WB10TJ	1	●	TSM	8120185	178,00
TC630-UNC5/16-A1D-WB10TJ	WB10TJ	1	●	TSM	8120176	232,00
TC630-UNC5/16-A5F-WB10TJ	WB10TJ	1	●	TSM	8120186	232,00
TC630-UNC3/8-A5F-WB10TJ	WB10TJ	1	●	TSM	8120187	290,00
TC630-UNC1/2-A5F-WB10TJ	WB10TJ	1	●	TSM	8120188	348,00
TC630-UNC5/8-A5F-WB10TJ	WB10TJ	1	●	TSM	8120189	434,00
TC630-UNC3/4-A5F-WB10TJ	WB10TJ	1	●	TSM	8120190	521,00
TC630-UNF1-A0F-WB10TJ	WB10TJ	1	●	TSM	8120196	192,00
TC630-UNF0-A0F-WB10TJ	WB10TJ	1	●	TSM	8120195	192,00
TC630-UNF5-A0F-WB10TJ	WB10TJ	1	●	TSM	8120197	172,00
TC630-UNF6-A0F-WB10TJ	WB10TJ	1	●	TSM	8120198	172,00
TC630-UNF8-A0F-WB10TJ	WB10TJ	1	●	TSM	8120199	165,00
TC630-UNF10-A0D-WB10TJ	WB10TJ	1	●	TSM	8120191	159,00
TC630-UNF10-A0F-WB10TJ	WB10TJ	1	●	TSM	8120200	159,00
TC630-UNF1/4-A0F-WB10TJ	WB10TJ	1	●	TSM	8120201	196,00
TC630-UNF1/4-A1D-WB10TJ	WB10TJ	1	●	TSM	8120192	255,00
TC630-UNF5/16-A0F-WB10TJ	WB10TJ	1	●	TSM	8120202	245,00
TC630-UNF5/16-A1D-WB10TJ	WB10TJ	1	●	TSM	8120193	319,00
TC630-UNF3/8-A1D-WB10TJ	WB10TJ	1	●	TSM	8120194	319,00
TC630-UNF7/16-A5F-WB10TJ	WB10TJ	1	●	TSM	8120203	382,00
TC630-UNF9/16-A5F-WB10TJ	WB10TJ	1	●	TSM	8120204	446,00
TC630-UNF3/4-A5F-WB10TJ	WB10TJ	1	●	TSM	8120205	669,00
TC630-M10X1.25A0E-WB10TJ	WB10TJ	1	●	TSM	8120166	270,00
TC645-G1/16-A1D-WB10TJ	WB10TJ	1	●	TSM	8502208	203,00
TC645-G1/8-A1D-WB10TJ	WB10TJ	1	●	TSM	8395922	275,00
TC645-G1/4-A1D-WB10TJ	WB10TJ	1	●	TSM	8378443	330,00
TC645-M4-A1D-WB10TJ	WB10TJ	1	●	TSM	8378416	203,00
TC645-M5-A1D-WB10TJ	WB10TJ	1	●	TSM	8378417	203,00

Bezeichnung / Designation	Sorte / Grade	VE / US		Disc. Gr.	Article No.	EURO Stück / piece
TC645-M5-A1E-WB10TJ	WB10TJ	1	●	TSM	8378423	203,00
TC645-M6-A1D-WB10TJ	WB10TJ	1	●	TSM	8378418	203,00
TC645-M6-A1E-WB10TJ	WB10TJ	1	●	TSM	8378424	203,00
TC645-M8-A1D-WB10TJ	WB10TJ	1	●	TSM	8378419	232,00
TC645-M8-A1E-WB10TJ	WB10TJ	1	●	TSM	8378425	232,00
TC645-M10-A1D-WB10TJ	WB10TJ	1	●	TSM	8378420	290,00
TC645-M10-A1E-WB10TJ	WB10TJ	1	●	TSM	8378426	290,00
TC645-M12-A1D-WB10TJ	WB10TJ	1	●	TSM	8378421	333,00
TC645-M12-A1E-WB10TJ	WB10TJ	1	●	TSM	8378427	333,00
TC645-UNC8-A1D-WB10TJ	WB10TJ	1	●	TSM	8378428	203,00
TC645-UNC8-A1E-WB10TJ	WB10TJ	1	●	TSM	8378435	203,00
TC645-UNC10-A1D-WB10TJ	WB10TJ	1	●	TSM	8378429	203,00
TC645-UNC10-A1E-WB10TJ	WB10TJ	1	●	TSM	8378436	203,00
TC645-UNC1/4-A1D-WB10TJ	WB10TJ	1	●	TSM	8378430	203,00
TC645-UNC1/4-A1E-WB10TJ	WB10TJ	1	●	TSM	8378437	203,00
TC645-UNC5/16-A1D-WB10TJ	WB10TJ	1	●	TSM	8378431	232,00
TC645-UNC5/16-A1E-WB10TJ	WB10TJ	1	●	TSM	8378438	232,00
TC645-UNC3/8-A1D-WB10TJ	WB10TJ	1	●	TSM	8378432	290,00
TC645-UNC3/8-A1E-WB10TJ	WB10TJ	1	●	TSM	8378439	290,00
TC645-UNC7/16-A1D-WB10TJ	WB10TJ	1	●	TSM	8378433	319,00
TC645-UNC7/16-A1E-WB10TJ	WB10TJ	1	●	TSM	8378440	319,00
TC645-UNC1/2-A1D-WB10TJ	WB10TJ	1	●	TSM	8378434	333,00
TC645-UNC1/2-A1E-WB10TJ	WB10TJ	1	●	TSM	8378441	333,00
TC685-G1/16-A1D-WB10RC	WB10RC	1	●	TSM	8405316	222,00
TC685-G1/8-A1D-WB10RC	WB10RC	1	●	TSM	8405317	277,00
TC685-G1/4-A1D-WB10RC	WB10RC	1	●	TSM	8405318	333,00
TC685-G1/2-A1D-WB10RC	WB10RC	1	●	TSM	8405319	471,00
TC685-M2-A0D-WB10RC	WB10RC	1	●	TSM	8404728	123,00
TC685-M2-A0E-WB10RC	WB10RC	1	●	TSM	8405312	123,00
TC685-M2.5-A0D-WB10RC	WB10RC	1	●	TSM	8404729	123,00
TC685-M2.5-A0E-WB10RC	WB10RC	1	●	TSM	8405313	123,00
TC685-M3-A0D-WB10RC	WB10RC	1	●	TSM	7559561	123,00
TC685-M3-A0E-WB10RC	WB10RC	1	●	TSM	7559570	123,00
TC685-M4-A0D-WB10RC	WB10RC	1	●	TSM	7559562	125,00
TC685-M4-A0E-WB10RC	WB10RC	1	●	TSM	7559571	125,00
TC685-M5-A0D-WB10RC	WB10RC	1	●	TSM	7559563	126,00
TC685-M5-A0E-WB10RC	WB10RC	1	●	TSM	7559572	126,00
TC685-M6-A1D-WB10RC	WB10RC	1	●	TSM	7559564	204,00
TC685-M6-A1E-WB10RC	WB10RC	1	●	TSM	7559573	204,00
TC685-M8-A1D-WB10RC	WB10RC	1	●	TSM	7559565	233,00
TC685-M8-A1E-WB10RC	WB10RC	1	●	TSM	7559574	233,00
TC685-M10-A1D-WB10RC	WB10RC	1	●	TSM	7559566	292,00
TC685-M10-A1E-WB10RC	WB10RC	1	●	TSM	7559575	292,00
TC685-M12-A1D-WB10RC	WB10RC	1	●	TSM	7559567	321,00
TC685-M12-A1E-WB10RC	WB10RC	1	●	TSM	7559576	321,00
TC685-M14-A1D-WB10RC	WB10RC	1	●	TSM	7559568	350,00
TC685-M14-A1E-WB10RC	WB10RC	1	●	TSM	7559577	350,00
TC685-M16-A1D-WB10RC	WB10RC	1	●	TSM	7559569	409,00
TC685-M16-A1E-WB10RC	WB10RC	1	●	TSM	7559578	409,00
TC685-M18-A1D-WB10RC	WB10RC	1	●	TSM	8405310	467,00
TC685-M18-A1E-WB10RC	WB10RC	1	●	TSM	8405314	467,00
TC685-M20-A1D-WB10RC	WB10RC	1	●	TSM	8405311	496,00
TC685-M20-A1E-WB10RC	WB10RC	1	●	TSM	8405315	496,00
TCGT06T101-FM2	WSM21	10	●	029	7054066	16,52
TCGT06T101-FN2	WNN10	10	●	028	6955659	15,26
TCGT06T102-FM2	WSM21	10	●	029	7054067	16,52
TCGT06T102-FN2	WNN10	10	●	028	6955660	15,26
TCGT06T104-FM2	WSM01	10	●	029	7499385	17,02
TCGT06T104-FM2	WSM21	10	●	029	7054068	16,52
TCGT06T104-FN2	WN10	10	●	028	8132995	12,50
TCGT06T104-FN2	WNN10	10	●	028	6955661	15,26
TCGT06T104M-FP2	WEP10C	10	●	029	7780045	14,88
TCGT090202-FM2	WSM20S	10	●	029	7054069	16,52
TCGT090202-FN2	WNN10	10	●	028	6955662	15,26
TCGT090204-FM2	WSM20S	10	●	029	7054070	16,52
TCGT090204-FN2	WN10	10	●	028	8132996	12,50
TCGT090204-FN2	WNN10	10	●	028	6955663	15,26
TCGT090204-MM4	WSM20S	10	●	029	6844627	16,52
TCGT090204-MP4	WPP20G	10	●	029	8204734	17,02
TCGT090204M-FP2	WEP10C	10	●	029	7780046	14,88

Bezeichnung / Designation	Sorte / Grade	VE / US		Disc. Gr.	Article No.	EURO Stück / piece
TCGT110201-FM2	WSM20S	10	●	029	7054071	18,00
TCGT110201-MN2	WNN10	10	●	028	6955717	16,63
TCGT110201-PF2	WXN10	10	●	028	5337418	16,63
TCGT110202-FM2	WSM01	10	●	029	7499386	18,55
TCGT110202-FM2	WSM20S	10	●	029	7054072	18,00
TCGT110202-FN2	WNN10	10	●	028	6955664	16,63
TCGT110202-MN2	WN10	10	●	028	8132997	13,63
TCGT110202-MN2	WNN10	10	●	028	6955718	16,63
TCGT110202M-FP2	WEP10C	10	●	029	7780047	16,20
TCGT110204-FM2	WSM01	10	●	029	7499387	18,55
TCGT110204-FM2	WSM20S	10	●	029	7054073	18,00
TCGT110204-FN2	WN10	10	●	028	8132998	13,63
TCGT110204-FN2	WNN10	10	●	028	6955665	16,63
TCGT110204-MK4	WKK20S	10	●	029	6357864	18,00
TCGT110204-MM4	WSM01	10	●	029	7021265	18,55
TCGT110204-MM4	WSM20S	10	●	029	6844628	18,00
TCGT110204-MN2	WN10	10	●	028	8132999	13,63
TCGT110204-MN2	WNN10	10	●	028	6955719	16,63
TCGT110204-MP4	WPP10G	10	●	029	8204736	18,55
TCGT110204-MP4	WPP20G	10	●	029	8204735	18,55
TCGT110204M-FP2	WEP10C	10	●	029	7780048	16,20
TCGT110208-MM4	WSM01	10	●	029	7021266	18,55
TCGT110208-MP4	WPP20G	10	●	029	8204737	18,55
TCGT16T302-FM2	WSM20S	10	●	029	7054074	23,36
TCGT16T302-MN2	WN10	10	●	028	8133000	17,68
TCGT16T302-MN2	WNN10	10	●	028	6955720	21,55
TCGT16T304-FM2	WSM01	10	●	029	7499388	24,08
TCGT16T304-FM2	WSM20S	10	●	029	7054075	23,36
TCGT16T304-FN2	WN10	10	●	028	8133001	17,68
TCGT16T304-FN2	WNN10	10	●	028	6955666	21,55
TCGT16T304-MM4	WSM20S	10	●	029	6844630	23,36
TCGT16T304-MN2	WN10	10	●	028	8133002	17,68
TCGT16T304-MN2	WNN10	10	●	028	6955721	21,55
TCGT16T308-FM2	WSM01	10	●	029	7499389	24,08
TCGT16T308-FM2	WSM20S	10	●	029	7054076	23,36
TCGT16T308-FN2	WN10	10	●	028	8133003	17,68
TCGT16T308-FN2	WNN10	10	●	028	6955667	21,55
TCGT16T308-MK4	WKK20S	10	●	029	6357908	23,36
TCGT16T308-MM4	WSM20S	10	●	029	6844631	23,36
TCGT16T308-MN2	WN10	10	●	028	8133004	17,68
TCGT16T308-MN2	WNN10	10	●	028	6955722	21,55
TCGW06T102TS-1	WBH10	2	●	023	7970966	56,20
TCGW06T102TS-1	WBH20	2	●	023	7970967	56,20
TCGW06T102TS-1	WBK20	2	●	023	7823871	56,20
TCGW06T104TS-1	WBH10	2	●	023	7970968	56,20
TCGW06T104TS-1	WBH20	2	●	023	7970969	56,20
TCGW06T104TS-1	WBK20	2	●	023	7823872	56,20
TCGW090204FS-1	WDN10	2	●	025	6674452	68,60
TCGW090204FS-9	WDN10	2	●	025	6674553	110,00
TCGW110202FS-1	WDN10	2	●	025	6674453	71,70
TCGW110202TS-3	WBK20	2	●	023	7823873	105,00
TCGW110204FS-1	WDN10	2	●	025	6674454	71,70
TCGW110204FS-9	WDN10	2	●	025	6674554	115,00
TCGW110204TM-3	WBH10	2	●	023	7971020	105,00
TCGW110204TM-3	WBH10C	2	●	023	7971021	116,00
TCGW110204TM-3	WBH20	2	●	023	7971022	105,00
TCGW110204TM-3	WBH20C	2	●	023	8306533	116,00
TCGW110204TM-3	WBH30	2	●	023	8060985	105,00
TCGW110204TS-3	WBK20	2	●	023	7823874	105,00
TCGW110208FS-1	WDN10	2	●	025	6674550	71,70
TCGW110208TM-3	WBH10	2	●	023	7971023	105,00
TCGW110208TM-3	WBH10C	2	●	023	7971024	116,00
TCGW110208TM-3	WBH20	2	●	023	7971025	105,00
TCGW110208TM-3	WBH20C	2	●	023	8306534	116,00
TCGW110208TM-3	WBH30	2	●	023	8060986	105,00
TCGW16T304FS-1	WDN10	2	●	025	6674551	74,80
TCGW16T308FS-1	WDN10	2	●	025	6674552	74,80
TCGW16T308FS-9	WDN10	2	●	025	6674555	120,00
TCMT06T102-FM4	WSM21	10	●	029	6917342	9,81
TCMT06T102-FP4	WPP20G	10	●	029	8204738	10,10

Bezeichnung / Designation	Sorte / Grade	VE / US		Disc. Gr.	Article No.	EURO Stück / piece
TCMT06T102-FP4	WPP20S	10	■	029	6436262*	10,10
TCMT06T104-FM4	WSM21	10	●	029	6917343	9,81
TCMT06T104-FP4	WEP10C	10	●	029	7425542	8,84
TCMT06T104-FP4	WPP20G	10	●	029	8204739	10,10
TCMT06T104-FP4	WPP20S	10	■	029	6436299*	10,10
TCMT090202-FM4	WSM10S	10	●	029	6917271	9,81
TCMT090202-FM4	WSM20S	10	●	029	6917272	9,81
TCMT090202-FP4	WPP20G	10	●	029	8204740	10,10
TCMT090202-FW4	WPP20G	10	●	029	8296399	11,96
TCMT090202-FW4	WSM20S	10	●	029	8296400	11,28
TCMT090204-FM4	WSM10S	10	●	029	6917274	9,81
TCMT090204-FM4	WSM20S	10	●	029	6917275	9,81
TCMT090204-FM4	WSM30S	10	■	029	6917276*	9,81
TCMT090204-FP4	WEP10C	10	●	029	7425543	8,84
TCMT090204-FP4	WKP01G	10	●	029	8422894	10,10
TCMT090204-FP4	WPP10G	10	●	029	8204742	10,10
TCMT090204-FP4	WPP20G	10	●	029	8204741	10,10
TCMT090204-FW4	WPP10G	10	●	029	8296401	11,96
TCMT090204-FW4	WPP20G	10	●	029	8296402	11,96
TCMT090204-FW4	WSM20S	10	●	029	8296403	11,28
TCMT090204-MK4	WKK10S	10	●	029	6485643	9,81
TCMT090204-MK4	WKK20S	10	●	029	6485288	9,81
TCMT090204-MM4	WSM10S	10	●	029	6836837	9,81
TCMT090204-MM4	WSM20S	10	●	029	6836836	9,81
TCMT090204-MP4	WPP20G	10	●	029	8204743	10,10
TCMT090204-RK4	WKK10S	10	●	029	6651129	9,81
TCMT090204-RK4	WKK20S	10	●	029	6651140	9,81
TCMT090204-RM4	WSM20S	10	●	029	6917311	9,81
TCMT090204-RM4	WSM30S	10	●	029	6917312	9,81
TCMT090204-RP4	WPP20G	10	●	029	8204745	10,10
TCMT090204-RP4	WPP30G	10	●	029	8204744	10,10
TCMT090208-FM4	WSM10S	10	●	029	6917277	9,81
TCMT090208-FM4	WSM20S	10	●	029	6917278	9,81
TCMT090208-FP4	WPP20G	10	●	029	8204746	10,10
TCMT090208-MK4	WKK20S	10	●	029	6485390	9,81
TCMT090208-MM4	WSM20S	10	●	029	6836838	9,81
TCMT090208-MP4	WPP20G	10	●	029	8204747	10,10
TCMT090208-RK4	WKK10S	10	●	029	6651141	9,81
TCMT090208-RK4	WKK20S	10	●	029	6651142	9,81
TCMT090208-RM4	WSM20S	10	●	029	6917313	9,81
TCMT090208-RP4	WPP20G	10	●	029	8204749	10,10
TCMT090208-RP4	WPP30G	10	●	029	8204748	10,10
TCMT110202-FM4	WSM10S	10	●	029	6917279	10,74
TCMT110202-FM4	WSM20S	10	●	029	6917280	10,74
TCMT110202-FM4	WSM30S	10	●	029	6917281	10,74
TCMT110202-FP4	WPP10G	10	●	029	8204751	11,06
TCMT110202-FP4	WPP20G	10	●	029	8204750	11,06
TCMT110202-FP4	WPP20S	10	■	029	6439372*	11,06
TCMT110204-FK6	WKK10S	10	●	029	6733995	10,74
TCMT110204-FK6	WKK20S	10	●	029	6733996	10,74
TCMT110204-FM4	WMP20S	10	●	029	6465103	10,74
TCMT110204-FM4	WSM10S	10	●	029	6839055	10,74
TCMT110204-FM4	WSM20S	10	●	029	6839056	10,74
TCMT110204-FM4	WSM30S	10	●	029	6839057	10,74
TCMT110204-FM6	WSM20S	10	●	029	7054150	10,74
TCMT110204-FM6	WSM30S	10	●	029	7054151	10,74
TCMT110204-FP4	WEP10C	10	●	029	7425544	9,67
TCMT110204-FP4	WKP01G	10	●	029	8422893	11,06
TCMT110204-FP4	WPP10G	10	●	029	8204752	11,06
TCMT110204-FP4	WPP10S	10	■	029	6438098*	11,06
TCMT110204-FP4	WPP20G	10	●	029	8204753	11,06
TCMT110204-FP4	WPP20S	10	■	029	6439374*	11,06
TCMT110204-FP6	WPP20G	10	●	029	8204754	11,06
TCMT110204-FP6	WPP20S	10	■	029	6730402*	11,06
TCMT110204-FW4	WPP10G	10	●	029	8296404	13,10
TCMT110204-FW4	WPP20G	10	●	029	8296405	13,10
TCMT110204-FW4	WSM20S	10	●	029	8296406	12,35
TCMT110204-MK4	WKK10S	10	●	029	6485674	10,74
TCMT110204-MK4	WKK20S	10	●	029	6485398	10,74
TCMT110204-MM4	WSM20S	10	●	029	6836840	10,74

Bezeichnung / Designation	Sorte / Grade	VE / US		Disc. Gr.	Article No.	EURO Stück / piece
TCMT110204-MP4	WPP10G	10	●	029	8204756	11,06
TCMT110204-MP4	WPP20G	10	●	029	8204755	11,06
TCMT110204-MP4	WPP20S	10	■	029	6450963*	11,06
TCMT110204-MP6	WPP10G	10	●	029	8205084	11,06
TCMT110204-MP6	WPP20G	10	●	029	8205085	11,06
TCMT110204-PS5	WAM30	10	●	029	5025439	11,02
TCMT110204-RK4	WKK10S	10	●	029	6651143	10,74
TCMT110204-RK4	WKK20S	10	●	029	6651144	10,74
TCMT110204-RM4	WMP20S	10	●	029	6955958	10,74
TCMT110204-RM4	WSM10S	10	●	029	6917315	10,74
TCMT110204-RM4	WSM20S	10	●	029	6917316	10,74
TCMT110204-RM4	WSM30S	10	●	029	6917317	10,74
TCMT110204-RP4	WPP10G	10	●	029	8204759	11,06
TCMT110204-RP4	WPP20G	10	●	029	8204757	11,06
TCMT110204-RP4	WPP20S	10	■	029	6449087*	11,06
TCMT110204-RP4	WPP30G	10	●	029	8204758	11,06
TCMT110204-RP4	WPP30S	10	■	029	6449088*	11,06
TCMT110208-FK6	WKK10S	10	●	029	6733997	10,74
TCMT110208-FK6	WKK20S	10	●	029	6733998	10,74
TCMT110208-FM4	WSM10S	10	●	029	6917282	10,74
TCMT110208-FM4	WSM20S	10	●	029	6917283	10,74
TCMT110208-FM4	WSM30S	10	●	029	6917284	10,74
TCMT110208-FM6	WSM20S	10	●	029	7054152	10,74
TCMT110208-FM6	WSM30S	10	●	029	7054153	10,74
TCMT110208-FP4	WPP10G	10	●	029	8204760	11,06
TCMT110208-FP4	WPP10S	10	■	029	6438797*	11,06
TCMT110208-FP4	WPP20G	10	●	029	8204761	11,06
TCMT110208-FP6	WPP20G	10	●	029	8204762	11,06
TCMT110208-FW4	WPP10G	10	●	029	8296407	13,10
TCMT110208-FW4	WPP20G	10	●	029	8296408	13,10
TCMT110208-FW4	WSM20S	10	●	029	8296409	12,35
TCMT110208-MK4	WKK10S	10	●	029	6485675	10,74
TCMT110208-MK4	WKK20S	10	●	029	6485438	10,74
TCMT110208-MM4	WSM20S	10	●	029	6836842	10,74
TCMT110208-MP4	WPP10G	10	●	029	8204764	11,06
TCMT110208-MP4	WPP20G	10	●	029	8204763	11,06
TCMT110208-RK4	WKK10S	10	●	029	6651145	10,74
TCMT110208-RK4	WKK20S	10	●	029	6651146	10,74
TCMT110208-RM4	WMP20S	10	●	029	6462165	10,74
TCMT110208-RM4	WSM20S	10	●	029	6839133	10,74
TCMT110208-RM4	WSM30S	10	●	029	6839134	10,74
TCMT110208-RP4	WPP20G	10	●	029	8204765	11,06
TCMT110208-RP4	WPP20S	10	■	029	6449089*	11,06
TCMT110208-RP4	WPP30G	10	●	029	8204766	11,06
TCMT110304-MP6	WPP20G	10	●	029	8205131	11,36
TCMT16T302-FM4	WSM20S	10	●	029	6917285	13,92
TCMT16T302-FP4	WPP20G	10	●	029	8204767	14,34
TCMT16T304-FK6	WKK10S	10	●	029	6733999	13,92
TCMT16T304-FK6	WKK20S	10	●	029	6734000	13,92
TCMT16T304-FM4	WMP20S	10	●	029	6465137	13,92
TCMT16T304-FM4	WSM10S	10	●	029	6839058	13,92
TCMT16T304-FM4	WSM20S	10	●	029	6839059	13,92
TCMT16T304-FM4	WSM30S	10	●	029	6839060	13,92
TCMT16T304-FM6	WSM20S	10	●	029	7054154	13,92
TCMT16T304-FM6	WSM30S	10	●	029	7054155	13,92
TCMT16T304-FP4	WKP01G	10	●	029	8422895	14,34
TCMT16T304-FP4	WPP10G	10	●	029	8204769	14,34
TCMT16T304-FP4	WPP20G	10	●	029	8204768	14,34
TCMT16T304-FP4	WPP20S	10	■	029	6439382*	14,34
TCMT16T304-FP6	WPP20G	10	●	029	8204770	14,34
TCMT16T304-FP6	WPP20S	10	■	029	6730404*	14,34
TCMT16T304-FW4	WPP10G	10	●	029	8296410	17,00
TCMT16T304-FW4	WPP20G	10	●	029	8296411	17,00
TCMT16T304-FW4	WSM20S	10	●	029	8296412	16,02
TCMT16T304-MK4	WKK10S	10	●	029	6518114	13,92
TCMT16T304-MK4	WKK20S	10	●	029	6485441	13,92
TCMT16T304-MM4	WMP20S	10	●	029	6636301	13,92
TCMT16T304-MM4	WSM10S	10	●	029	6836845	13,92
TCMT16T304-MM4	WSM20S	10	●	029	6836844	13,92
TCMT16T304-MP4	WPP10G	10	●	029	8204772	14,34

Bezeichnung / Designation	Sorte / Grade	VE / US		Disc. Gr.	Article No.	EURO Stück / piece
TCMT16T304-MP4	WPP20G	10	●	029	8204771	14,34
TCMT16T304-MP4	WPP20S	10	■	029	6451589*	14,34
TCMT16T304-MP6	WPP10G	10	●	029	8205086	14,34
TCMT16T304-MP6	WPP20G	10	●	029	8205087	14,34
TCMT16T304-MW4	WKK20S	10	●	029	8296316	16,02
TCMT16T304-MW4	WPP20G	10	●	029	8296317	17,00
TCMT16T304-MW4	WSM20S	10	●	029	8296318	16,02
TCMT16T304-RK4	WKK20S	10	●	029	6651148	13,92
TCMT16T304-RM4	WMP20S	10	●	029	6462195	13,92
TCMT16T304-RM4	WSM10S	10	●	029	6839135	13,92
TCMT16T304-RM4	WSM20S	10	●	029	6839136	13,92
TCMT16T304-RM4	WSM30S	10	●	029	6839137	13,92
TCMT16T304-RP4	WPP10G	10	●	029	8204775	14,34
TCMT16T304-RP4	WPP20G	10	●	029	8204773	14,34
TCMT16T304-RP4	WPP20S	10	■	029	6449121*	14,34
TCMT16T304-RP4	WPP30G	10	●	029	8204774	14,34
TCMT16T308-FK6	WKK10S	10	●	029	6734001	13,92
TCMT16T308-FK6	WKK20S	10	●	029	6734002	13,92
TCMT16T308-FM4	WMP20S	10	●	029	6465195	13,92
TCMT16T308-FM4	WSM10S	10	●	029	6839061	13,92
TCMT16T308-FM4	WSM20S	10	●	029	6839062	13,92
TCMT16T308-FM4	WSM30S	10	●	029	6839063	13,92
TCMT16T308-FM6	WSM20S	10	●	029	7054156	13,92
TCMT16T308-FP4	WEP10C	10	●	029	7425545	12,56
TCMT16T308-FP4	WPP10G	10	●	029	8204776	14,34
TCMT16T308-FP4	WPP10S	10	■	029	6438909*	14,34
TCMT16T308-FP4	WPP20G	10	●	029	8204777	14,34
TCMT16T308-FP6	WPP20G	10	●	029	8204778	14,34
TCMT16T308-FP6	WPP20S	10	■	029	6730405*	14,34
TCMT16T308-FW4	WPP10G	10	●	029	8296413	17,00
TCMT16T308-FW4	WPP20G	10	●	029	8296414	17,00
TCMT16T308-FW4	WSM20S	10	●	029	8296415	16,02
TCMT16T308-MK4	WKK10S	10	●	029	6485679	13,92
TCMT16T308-MK4	WKK20S	10	●	029	6485446	13,92
TCMT16T308-MM4	WMP20S	10	●	029	6636302	13,92
TCMT16T308-MM4	WSM10S	10	●	029	6836847	13,92
TCMT16T308-MM4	WSM20S	10	●	029	6836846	13,92
TCMT16T308-MP4	WPP10G	10	●	029	8204780	14,34
TCMT16T308-MP4	WPP20G	10	●	029	8204779	14,34
TCMT16T308-MP4	WPP20S	10	■	029	6451659*	14,34
TCMT16T308-MP6	WPP10G	10	●	029	8205088	14,34
TCMT16T308-MP6	WPP20G	10	●	029	8205089	14,34
TCMT16T308-MW4	WKK20S	10	●	029	8296319	16,02
TCMT16T308-MW4	WPP20G	10	●	029	8377382	17,00
TCMT16T308-MW4	WSM20S	10	●	029	8296320	16,02
TCMT16T308-PM5	WAK20	10	●	029	5025032	13,92
TCMT16T308-RK4	WKK10S	10	●	029	6651149	13,92
TCMT16T308-RK4	WKK20S	10	●	029	6651150	13,92
TCMT16T308-RM4	WMP20S	10	●	029	6462252	13,92
TCMT16T308-RM4	WSM10S	10	●	029	6839138	13,92
TCMT16T308-RM4	WSM20S	10	●	029	6839139	13,92
TCMT16T308-RM4	WSM30S	10	●	029	6839140	13,92
TCMT16T308-RP4	WPP10G	10	●	029	8204783	14,34
TCMT16T308-RP4	WPP20G	10	●	029	8204781	14,34
TCMT16T308-RP4	WPP20S	10	■	029	6449123*	14,34
TCMT16T308-RP4	WPP30G	10	●	029	8204782	14,34
TCMT16T308-RP4	WPP30S	10	■	029	6449124*	14,34
TCMT16T312-RK4	WKK10S	10	●	029	6651151	13,92
TCMT16T312-RK4	WKK20S	10	●	029	6651152	13,92
TCMT16T312-RM4	WSM20S	10	●	029	6917318	13,92
TCMT16T312-RM4	WSM30S	10	●	029	6917319	13,92
TCMT16T312-RP4	WPP10G	10	●	029	8204786	14,34
TCMT16T312-RP4	WPP20G	10	●	029	8204784	14,34
TCMT16T312-RP4	WPP30G	10	●	029	8204785	14,34
TCMT220408-MP4	WPP20G	10	●	029	8204787	19,89
TCMT220408-MP4	WPP20S	10	■	029	7021331*	19,89
TCMW110204	WCB50	1	●	023	5017048	54,90
TCMW110204-RK6	WKK10S	10	●	029	6651589	9,67
TCMW110204-RK6	WKK20S	10	●	029	6651590	9,67
TCMW110208	WCB50	1	●	023	5017050	54,90

Bezeichnung / Designation	Sorte / Grade	VE / US		Disc. Gr.	Article No.	EURO Stück / piece
TCMW110208-RK6	WKK10S	10	●	029	6651591	9,67
TCMW110208-RK6	WKK20S	10	●	029	6651592	9,67
TCMW16T304-RK6	WKK10S	10	●	029	6651593	13,92
TCMW16T304-RK6	WKK20S	10	●	029	6651594	13,92
TCMW16T308-RK6	WKK10S	10	●	029	6651595	13,92
TCMW16T308-RK6	WKK20S	10	●	029	6651596	13,92
TNGA160404SM-S	WCH10C	10	●	024	8064419	19,50
TNGA160404TM-3	WBH10	2	●	023	7643525	102,00
TNGA160404TM-3	WBH10C	2	●	023	7643580	112,00
TNGA160404TM-3	WBH20	2	●	023	7643586	102,00
TNGA160404TS-3	WBK20	2	●	023	7823853	102,00
TNGA160408SM-S	WCH10C	10	●	024	8064420	19,50
TNGA160408T02020	WCK10	10	●	024	7349636	27,30
TNGA160408TM-3	WBH10	2	●	023	7643526	102,00
TNGA160408TM-3	WBH10C	2	●	023	7643581	112,00
TNGA160408TM-3	WBH20	2	●	023	7643587	102,00
TNGA160408TM-3	WBH30	2	●	023	8060975	102,00
TNGA160408TS-3	WBK20	2	●	023	7823854	102,00
TNGA160412SM-S	WCH10C	10	●	024	8064421	19,50
TNGA160412T02020	WCK10	10	●	024	7349637	27,30
TNMA160404-RK5	WKK10S	10	●	027	6411623	12,32
TNMA160404-RK5	WKK20S	10	●	027	6391851	12,32
TNMA160408-RK5	WKK10S	10	●	027	6411625	12,32
TNMA160408-RK5	WKK20S	10	●	027	6392275	12,32
TNMA160408-RK7	WKK10S	10	●	027	6435012	12,32
TNMA160412-RK5	WKK10S	10	●	027	6411627	12,32
TNMA160412-RK5	WKK20S	10	●	027	6392490	12,32
TNMA160412-RK7	WKK10S	10	●	027	6435052	12,32
TNMA220408-RK5	WKK20S	10	●	027	6393734	17,04
TNMA220412-RK5	WKK20S	10	●	027	6393879	17,04
TNMA220416-RK5	WKK20S	10	●	027	6394046	17,04
TNMG110304-FP5	WPP10G	10	●	027	8115980	7,76
TNMG110304-MP3	WPP10G	10	●	027	8115992	7,76
TNMG110304-MP3	WPP20G	10	●	027	8115993	7,76
TNMG110308-FP5	WPP10G	10	●	027	8115981	7,76
TNMG110308-MP3	WPP10G	10	●	027	8115994	7,76
TNMG110308-MP3	WPP20G	10	●	027	8115995	7,76
TNMG160304-MP3	WPP20G	10	●	027	8115996	12,69
TNMG160308-MP5	WPP20G	10	●	027	8116010	12,69
TNMG160404-FM5	WMP20S	10	●	027	7091924	12,32
TNMG160404-FM5	WSM10S	10	●	027	7091925	12,32
TNMG160404-FM5	WSM20S	10	●	027	7091926	12,32
TNMG160404-FP5	WEP10C	10	●	027	8136992	11,08
TNMG160404-FP5	WKP01G	10	●	027	8422896	12,69
TNMG160404-FP5	WPP10G	10	●	027	8115982	12,69
TNMG160404-FP5	WPP10S	10	■	027	6060054*	12,69
TNMG160404-FP5	WPP20G	10	●	027	8115983	12,69
TNMG160404-FW5	WPP10G	10	●	027	8115988	14,57
TNMG160404-FW5	WPP20G	10	●	027	8115989	14,57
TNMG160404-FW5	WSM10S	10	●	027	7933353	14,17
TNMG160404-FW5	WSM20S	10	●	027	7933352	14,17
TNMG160404-MK5	WKK10S	10	●	027	6353308	12,32
TNMG160404-MK5	WKK20S	10	●	027	6121088	12,32
TNMG160404-MM5	WMP20S	10	●	027	7376608	12,32
TNMG160404-MM5	WSM10S	10	●	027	7251964	12,32
TNMG160404-MM5	WSM20S	10	●	027	7251965	12,32
TNMG160404-MM5	WSM30S	10	●	027	7251966	12,32
TNMG160404-MP3	WPP10G	10	●	027	8115997	12,69
TNMG160404-MP3	WPP20G	10	●	027	8115998	12,69
TNMG160404-MP3	WPP20S	10	■	027	6064527*	12,69
TNMG160404-MP3	WPP30G	10	●	027	8115999	12,69
TNMG160404-MP5	WPP10G	10	●	027	8116011	12,69
TNMG160404-MP5	WPP20G	10	●	027	8116012	12,69
TNMG160404-MP5	WPP20S	10	■	027	6248513*	12,69
TNMG160404-MP5	WPP30G	10	●	027	8116013	12,69
TNMG160404-MS3	WPP20G	10	●	027	8116035	12,69
TNMG160404-MS3	WSM01	10	●	027	6890826	12,69
TNMG160404-MU5	WMP20S	10	●	027	7895065	12,32
TNMG160404-MU5	WPP10G	10	●	027	8116039	12,69
TNMG160404-MU5	WPP20G	10	●	027	8116040	12,69

Bezeichnung / Designation	Sorte / Grade	VE / US		Disc. Gr.	Article No.	EURO Stück / piece
TNMG160404-MU5	WSM20S	10	●	027	7895066	12,32
TNMG160404-NF4	WSM10	10	●	027	5847627	12,32
TNMG160404-NMS	WSM10S	10	●	027	7053855	12,32
TNMG160404-NMS	WSM20S	10	●	027	7053856	12,32
TNMG160408-FM5	WMP20S	10	●	027	7091927	12,32
TNMG160408-FM5	WSM10S	10	●	027	7091928	12,32
TNMG160408-FM5	WSM20S	10	●	027	7091929	12,32
TNMG160408-FP5	WEP10C	10	●	027	8136993	11,08
TNMG160408-FP5	WKP01G	10	●	027	8422897	12,69
TNMG160408-FP5	WPP10G	10	●	027	8115984	12,69
TNMG160408-FP5	WPP10S	10	■	027	6057798*	12,69
TNMG160408-FP5	WPP20G	10	●	027	8115985	12,69
TNMG160408-FP5	WPP20S	10	■	027	6065931*	12,69
TNMG160408-FW5	WPP10G	10	●	027	8115990	14,57
TNMG160408-FW5	WPP20G	10	●	027	8115991	14,57
TNMG160408-FW5	WSM10S	10	●	027	7933357	14,17
TNMG160408-FW5	WSM20S	10	●	027	7933356	14,17
TNMG160408-MK5	WKK10S	10	●	027	6353321	12,32
TNMG160408-MK5	WKK20S	10	●	027	6121122	12,32
TNMG160408-MM5	WMP20S	10	●	027	7376609	12,32
TNMG160408-MM5	WSM10S	10	●	027	7251967	12,32
TNMG160408-MM5	WSM20S	10	●	027	7251968	12,32
TNMG160408-MM5	WSM30S	10	●	027	7251969	12,32
TNMG160408-MP3	WPP10G	10	●	027	8116000	12,69
TNMG160408-MP3	WPP10S	10	■	027	6064337*	12,69
TNMG160408-MP3	WPP20G	10	●	027	8116001	12,69
TNMG160408-MP3	WPP20S	10	■	027	6064528*	12,69
TNMG160408-MP3	WPP30G	10	●	027	8116002	12,69
TNMG160408-MP3	WPP30S	10	■	027	6065521*	12,69
TNMG160408-MP5	WPP05G	10	●	027	8411474	12,69
TNMG160408-MP5	WPP05S	10	■	027	6613519*	12,69
TNMG160408-MP5	WPP10G	10	●	027	8116014	12,69
TNMG160408-MP5	WPP10S	10	■	027	6305175*	12,69
TNMG160408-MP5	WPP20G	10	●	027	8116015	12,69
TNMG160408-MP5	WPP20S	10	■	027	6249243*	12,69
TNMG160408-MP5	WPP30G	10	●	027	8116016	12,69
TNMG160408-MS3	WPP20G	10	●	027	8116036	12,69
TNMG160408-MS3	WSM01	10	●	027	6890876	12,69
TNMG160408-MS3	WSM10S	10	●	027	7469067	12,32
TNMG160408-MU5	WMP20S	10	●	027	7560054	12,32
TNMG160408-MU5	WPP05G	10	●	027	8411475	12,69
TNMG160408-MU5	WPP10G	10	●	027	8116041	12,69
TNMG160408-MU5	WPP20G	10	●	027	8116042	12,69
TNMG160408-MU5	WPP20S	10	■	027	7560053*	12,69
TNMG160408-MU5	WSM20S	10	●	027	7560055	12,32
TNMG160408-MW5	WKK10S	10	●	027	7941533	14,17
TNMG160408-MW5	WKK20S	10	●	027	7941534	14,17
TNMG160408-MW5	WPP10G	10	●	027	8116045	14,57
TNMG160408-MW5	WPP20G	10	●	027	8116046	14,57
TNMG160408-NM4	WPP20	10	■	027	5092443*	12,69
TNMG160408-NM4	WPP20G	10	●	027	8369453*	12,69
TNMG160408-NMS	WSM10S	10	●	027	7053858	12,32
TNMG160408-NMS	WSM20S	10	●	027	7053859	12,32
TNMG160408-NMS	WSM30S	10	●	027	7053860	12,32
TNMG160408-NR4	WSM30	10	●	027	5354498	12,32
TNMG160408-RM5	WMP20S	10	●	027	6944688	12,32
TNMG160408-RM5	WSM10S	10	●	027	6944749	12,32
TNMG160408-RM5	WSM20S	10	●	027	6944750	12,32
TNMG160408-RM5	WSM30S	10	●	027	6944751	12,32
TNMG160408-RP5	WPP05G	10	●	027	8411477	12,69
TNMG160408-RP5	WPP05S	10	■	027	6613542*	12,69
TNMG160408-RP5	WPP10G	10	●	027	8116049	12,69
TNMG160408-RP5	WPP20G	10	●	027	8116050	12,69
TNMG160408-RP5	WPP30G	10	●	027	8116051	12,69
TNMG160408-RP5	WPP30S	10	■	027	6301731*	12,69
TNMG160412-FM5	WSM20S	10	●	027	7499333	12,32
TNMG160412-FP5	WPP10G	10	●	027	8115986	12,69
TNMG160412-FP5	WPP20G	10	●	027	8115987	12,69
TNMG160412-MK5	WKK10S	10	●	027	6353324	12,32
TNMG160412-MK5	WKK20S	10	●	027	6121123	12,32

Bezeichnung / Designation	Sorte / Grade	VE / US		Disc. Gr.	Article No.	EURO Stück / piece
TNMG160412-MM5	WMP20S	10	●	027	7376610	12,32
TNMG160412-MM5	WSM10S	10	●	027	7251970	12,32
TNMG160412-MM5	WSM20S	10	●	027	7251971	12,32
TNMG160412-MM5	WSM30S	10	●	027	7251972	12,32
TNMG160412-MP3	WPP10G	10	●	027	8116003	12,69
TNMG160412-MP3	WPP10S	10	●	027	6064338[1]	12,69
TNMG160412-MP3	WPP20G	10	●	027	8116004	12,69
TNMG160412-MP3	WPP30G	10	●	027	8116005	12,69
TNMG160412-MP5	WPP10G	10	●	027	8116017	12,69
TNMG160412-MP5	WPP20G	10	●	027	8116018	12,69
TNMG160412-MP5	WPP20S	10	■	027	6270659[2]	12,69
TNMG160412-MP5	WPP30G	10	●	027	8116019	12,69
TNMG160412-MU5	WMP20S	10	●	027	7560058	12,32
TNMG160412-MU5	WPP05G	10	●	027	8411476	12,69
TNMG160412-MU5	WPP10G	10	●	027	8116043	12,69
TNMG160412-MU5	WPP20G	10	●	027	8116044	12,69
TNMG160412-MU5	WSM20S	10	●	027	7560059	12,32
TNMG160412-MW5	WKK10S	10	●	027	7941537	14,17
TNMG160412-MW5	WKK20S	10	●	027	7941538	14,17
TNMG160412-MW5	WPP10G	10	●	027	8116047	14,57
TNMG160412-MW5	WPP20G	10	●	027	8116048	14,57
TNMG160412-NRS	WSM20S	10	●	027	7053934	12,32
TNMG160412-RM5	WMP20S	10	●	027	6944689	12,32
TNMG160412-RM5	WSM20S	10	●	027	6944752	12,32
TNMG160412-RM5	WSM30S	10	●	027	6944753	12,32
TNMG160412-RP5	WPP05G	10	●	027	8411478	12,69
TNMG160412-RP5	WPP10G	10	●	027	8116052	12,69
TNMG160412-RP5	WPP20G	10	●	027	8116053	12,69
TNMG160412-RP5	WPP30G	10	●	027	8116054	12,69
TNMG160412-RP5	WPP30S	10	■	027	6206314[2]	12,69
TNMG160416-MK5	WKK10S	10	●	027	6353424	12,32
TNMG160416-MK5	WKK20S	10	●	027	6123816	12,32
TNMG160416-MM5	WSM20S	10	●	027	7251973	12,32
TNMG220404-MP5	WPP10G	10	●	027	8116020	17,55
TNMG220404-MP5	WPP20G	10	●	027	8116021	17,55
TNMG220404-MS3	WPP20G	10	●	027	8116037	17,55
TNMG220404-MS3	WSM01	10	●	027	6890827	17,55
TNMG220408-MK5	WKK10S	10	●	027	6353464	17,04
TNMG220408-MK5	WKK20S	10	●	027	6127034	17,04
TNMG220408-MP3	WPP05S	10	■	027	6613454[2]	17,55
TNMG220408-MP3	WPP10G	10	●	027	8116006	17,55
TNMG220408-MP3	WPP20G	10	●	027	8116007	17,55
TNMG220408-MP5	WPP10G	10	●	027	8116022	17,55
TNMG220408-MP5	WPP10S	10	■	027	6305178[2]	17,55
TNMG220408-MP5	WPP20G	10	●	027	8116023	17,55
TNMG220408-MP5	WPP20S	10	■	027	6250155[2]	17,55
TNMG220408-MP5	WPP30G	10	●	027	8116024	17,55
TNMG220408-MP5	WPP30S	10	■	027	6305282[2]	17,55
TNMG220408-MS3	WPP20G	10	●	027	8116038	17,55
TNMG220408-MS3	WSM01	10	●	027	6890877	17,55
TNMG220408-MS3	WSM10S	10	●	027	6890828	17,04
TNMG220408-RM5	WMP20S	10	●	027	7251148	17,04
TNMG220408-RM5	WSM10S	10	●	027	7251147	17,04
TNMG220408-RM5	WSM20S	10	●	027	7251149	17,04
TNMG220408-RM5	WSM30S	10	●	027	7251150	17,04
TNMG220408-RP5	WPP10G	10	●	027	8116055	17,55
TNMG220408-RP5	WPP20G	10	●	027	8116056	17,55
TNMG220408-RP5	WPP30G	10	●	027	8116057	17,55
TNMG220412-MK5	WKK20S	10	●	027	6127053	17,04
TNMG220412-MP3	WPP10G	10	●	027	8116008	17,55
TNMG220412-MP3	WPP20G	10	●	027	8116009	17,55
TNMG220412-MP5	WPP10G	10	●	027	8116025	17,55
TNMG220412-MP5	WPP20G	10	●	027	8116026	17,55
TNMG220412-MP5	WPP30G	10	●	027	8116027	17,55
TNMG220412-RM5	WMP20S	10	●	027	7251151	17,04
TNMG220412-RM5	WSM20S	10	●	027	7251152	17,04
TNMG220412-RM5	WSM30S	10	●	027	7251153	17,04
TNMG220412-RP5	WPP05G	10	●	027	8411479	17,55
TNMG220412-RP5	WPP10G	10	●	027	8116058	17,55
TNMG220412-RP5	WPP20G	10	●	027	8116059	17,55

Bezeichnung / Designation	Sorte / Grade	VE / US		Disc. Gr.	Article No.	EURO Stück / piece
TNMG220412-RP5	WPP30G	10	●	027	8116060	17,55
TNMG220416-MK5	WKK10S	10	●	027	6353468	17,04
TNMG220416-MK5	WKK20S	10	●	027	6127091	17,04
TNMG220416-MP5	WPP10G	10	●	027	8116028	17,55
TNMG220416-MP5	WPP20G	10	●	027	8116029	17,55
TNMG220416-RP5	WPP05G	10	●	027	8411480	17,55
TNMG220416-RP5	WPP05S	10	■	027	6613545[2]	17,55
TNMG220416-RP5	WPP10G	10	●	027	8116061	17,55
TNMG220416-RP5	WPP20G	10	●	027	8116062	17,55
TNMG220416-RP5	WPP30G	10	●	027	8116063	17,55
TNMG270608-MP5	WPP20G	10	●	027	8116030	29,80
TNMG270612-MK5	WKK20S	5	●	027	6155378	28,90
TNMG270612-MP5	WPP10G	10	●	027	8116031	29,80
TNMG270612-MP5	WPP20G	5	●	027	8116032	29,80
TNMG270612-MP5	WPP30G	5	●	027	8116033	29,80
TNMG270612-RP5	WPP10G	10	●	027	8116064	29,80
TNMG270612-RP5	WPP20G	5	●	027	8116065	29,80
TNMG270612-RP5	WPP30G	10	●	027	8116066	29,80
TNMG270616-MP5	WPP20G	10	●	027	8116034	29,80
TNMG270616-RP5	WPP20G	10	●	027	8116067	29,80
TNMG270616-RP5	WPP30G	10	●	027	8116068	29,80
TNMG270616-RP7	WPP20G	5	●	027	8116071	29,80
TNMG270624-RP7	WPP20G	10	●	027	8116072	29,80
TNMG330924-RP5	WPP20G	10	●	027	8116069	58,30
TNMG330924-RP5	WPP30G	10	●	027	8116070	58,30
TNMM160408-HU3	WPP20G	10	●	027	8138395	12,69
TNMM160412-HU3	WPP10G	10	●	027	8138396	12,69
TNMM160412-HU3	WPP20G	10	●	027	8138397	12,69
TNMM220408-HU3	WPP20G	10	●	027	8138399	17,55
TNMM220408-HU3	WPP30G	10	●	027	8138398	17,55
TNMM220412-HU3	WPP20G	10	●	027	8138400	17,55
TNMM220416-HU3	WPP10G	10	●	027	8138401	17,55
TNMM220416-HU3	WPP20G	10	●	027	8138402	17,55
TNMM270612-HU3	WPP20G	5	●	027	8138403	29,80
TNMM270616-HU7	WPP20G	5	●	027	8138451	29,80
TNMM270616-HU7	WPP30G	5	●	027	8138452	29,80
TNMM270616-NRR	WPP30S	5	■	027	6154233[2]	29,80
TNMU11T304R-G27	WKP25S	10	●	004	8209393	20,68
TNMU11T304R-G27	WKP35G	10	●	004	8209395	24,82
TNMU11T304R-G27	WKP35S	10	●	004	8209394	20,68
TNMU11T304R-G27	WSP45G	10	●	004	8209396	21,72
TNMU11T304R-G57	WKP25S	10	●	004	7951800	20,68
TNMU11T304R-G57	WKP35G	10	●	004	7951802	24,82
TNMU11T304R-G57	WKP35S	10	●	004	7951801	20,68
TNMU11T304R-G57	WSP45G	10	●	004	7951803	21,72
TNMU160508R-G27	WKP25S	10	●	004	8209397	25,10
TNMU160508R-G27	WKP35G	10	●	004	8209399	30,10
TNMU160508R-G27	WKP35S	10	●	004	8209398	25,10
TNMU160508R-G27	WSP45G	10	●	004	8209410	26,30
TNMU160508R-G57	WKP25S	10	●	004	7828671	25,10
TNMU160508R-G57	WKP35G	10	●	004	7828673	30,10
TNMU160508R-G57	WKP35S	10	●	004	7828672	25,10
TNMU160508R-G57	WSP45G	10	●	004	7924361	26,30
TPAW1604PPN	WKP25S	10	●	009	7028069	25,80
TPAW1604PPN	WKP35S	10	●	009	5918901	25,80
TPEW160412	WTL71	10	●	009	5005039	18,68
TPGN110308	WSM20S	10	●	029	7469038	14,51
TPGN160304	WKK20S	10	●	029	7469039[3]	18,87
TPGN160304	WPP20G	10	●	029	8204788	19,44
TPGN160304	WSM20S	10	●	029	7469042	18,87
TPGN160308	WKK20S	10	●	029	7469044[3]	18,87
TPGN160308	WPP20G	10	●	029	8204789	19,44
TPGN160308	WSM20S	10	●	029	7469047	18,87
TPGN220408	WKK20S	10	●	029	7469051[3]	26,10
TPGT090204-MK4	WKK20S	10	●	029	6357920	16,52
TPGT090204-MM4	WSM01	10	●	029	7385557	17,01
TPGT090204-MP4	WPP20G	10	●	029	8204790	17,02
TPGT110204-MM4	WSM01	10	●	029	7021267	18,55
TPGT110204-MM4	WSM20S	10	●	029	6844697	18,00
TPGT110204-MP4	WPP20G	10	●	029	8204791	18,55

Bezeichnung / Designation	Sorte / Grade	VE / US		Disc. Gr.	Article No.	EURO Stück / piece
TPGT110208-MK4	WKK20S	10	●	029	6357929	18,00
TPGT110208-MM4	WSM01	10	■	029	7021268*	18,55
TPGT110208-MM4	WSM20S	10	●	029	6844698	18,00
TPGT16T304-MM4	WSM01	10	●	029	7021269	24,08
TPGT16T304-MM4	WSM20S	10	●	029	6844699	23,36
TPGT16T304-MP4	WPP20G	10	●	029	8204792	24,07
TPGT16T308-MM4	WSM01	10	●	029	7021270	24,08
TPGT16T308-MM4	WSM20S	10	●	029	6844700	23,36
TPGT16T308-MP4	WPP20G	10	●	029	8204793	24,07
TPGW110204FS-1	WDN10	2	●	025	7132683	71,70
TPGW110208FS-1	WDN10	2	●	025	7132684	71,70
TPGW16T304FS-1	WDN10	2	●	025	7132685	74,80
TPGW16T308FS-1	WDN10	2	●	025	7132686	74,80
TPJW1604PPN	WAK15	10	●	009	5036585	14,51
TPJW1604PPN	WKM	10	●	009	5004592	10,70
TPJW1604PPN	WKP25S	10	●	009	7028070	14,51
TPJW1604PPN	WKP35S	10	●	009	5918903	14,51
TPJW1604PPN	WPM	10	●	009	5004646	10,70
TPJW2204PPN	WKP35S	10	●	009	5918904	22,13
TPMR110304	WPP20G	10	●	029	8205132	9,63
TPMR110308	WPP20G	10	●	029	8205133	9,63
TPMR160304	WPP20G	10	●	029	8204794	12,88
TPMR160304	WPP20S	10	■	029	6876552*	12,88
TPMR160308	WPP20G	10	●	029	8204795	12,88
TPMR160308	WPP20S	10	■	029	6876553*	12,88
TPMT090204-MK4	WKK20S	10	●	029	6487457	9,81
TPMT090204-MM4	WSM20S	10	●	029	6837381	9,81
TPMT090204-MP4	WPP20G	10	●	029	8204796	10,10
TPMT090208-MK4	WKK20S	10	●	029	7021332	9,81
TPMT110204-FM4	WMP20S	10	●	029	7021370	10,74
TPMT110204-FM4	WSM20S	10	●	029	7021369	10,74
TPMT110204-FP4	WPP10G	10	●	029	8204797	11,06
TPMT110204-MK4	WKK20S	10	●	029	6487500	10,74
TPMT110204-MM4	WSM20S	10	●	029	6837382	10,74
TPMT110204-MP4	WPP20G	10	●	029	8204798	11,06
TPMT110208-MP4	WPP20G	10	●	029	8204799	11,06
TPMT110208-MP4	WPP20S	10	■	029	6452835*	11,06
TPMT16T304-FM4	WMP20S	10	●	029	7021372	13,92
TPMT16T304-FM4	WSM20S	10	●	029	7021371	13,92
TPMT16T304-FP4	WPP10G	10	●	029	8204800	14,34
TPMT16T304-MK4	WKK20S	10	●	029	6487689	13,92
TPMT16T304-MM4	WSM20S	10	●	029	6837384	13,92
TPMT16T304-MP4	WPP20G	10	●	029	8204801	14,34
TPMT16T308-MK4	WKK20S	10	●	029	6487710	13,92
TPMT16T308-MM4	WSM20S	10	●	029	6837385	13,92
TPMT16T308-MP4	WPP20G	10	●	029	8204802	14,34
TPMW110204-RK6	WKK20S	10	●	029	7021373	9,67
TPMW16T304-RK6	WKK20S	10	●	029	7021375	13,92
TPMW16T308-RK6	WKK20S	10	●	029	7021376	13,92
UX-12E1200N10-GD2	WKP33S	1	●	020	7789316	35,20
UX-19E1900N15-GD2	WKP33S	1	●	020	7789319	53,90
V500.00.040		1	●	095	5007839	625,00
V500.00.050		1	●	095	5035450	625,00
V500.00.C3		1	●	095	5041518	625,00
V500.00.C4		1	●	095	5043237	625,00
V500.00.C5		1	●	095	5043238	625,00
V500.00.C6		1	●	095	5043239	625,00
V500.00.C8		1	●	095	5043240	625,00
V500.00.HSK063		1	●	095	5007848	625,00
V500.00.HSK100		1	●	095	5007847	625,00
V510.10.050		1	●	095	5007824	261,00
V510.23.040		1	●	095	5007825	261,00
V510.23.050		1	●	095	5035451	261,00
V510.24.050		1	●	095	5007840	261,00
V510.40.040		1	●	095	5007826	261,00
V510.40.050		1	●	095	5007827	261,00
V510.HSK063AC		1	●	095	5007842	261,00
V510.HSK100AC		1	●	095	5007844	261,00
V530.22.025		1	●	095	5007833	85,80
V530.27.032		1	●	095	5007834	85,80

Bezeichnung / Designation	Sorte / Grade	VE / US		Disc. Gr.	Article No.	EURO Stück / piece
V530.32.040		1	●	095	5007835	85,80
V530.41.050		1	●	095	5007836	85,80
V530.55.063		1	●	095	5007837	85,80
V530.70.080		1	●	095	5007838	85,80
V530.C3		1	●	095	5042172	85,80
V530.C4		1	●	095	5042173	85,80
V530.C5		1	●	095	5042174	85,80
V530.C6		1	●	095	5042175	85,80
V530.C8		1	●	095	5042176	85,80
V540.23.040		1	●	095	5041420	171,00
V540.23.050		1	●	095	5041421	171,00
V540.C3		1	●	095	5042177	235,00
V540.C4		1	●	095	5042178	235,00
V540.C5		1	●	095	5042179	235,00
V540.C6		1	●	095	5042180	235,00
V540.C8		1	●	095	5042181	235,00
V540.HSK063AC		1	●	095	5041423	171,00
V540.HSK100AC		1	●	095	5041425	171,00
VBGT110302-FL2	WPP20G	10	●	029	8369474	27,40
VBGT110302-FL2	WSM01	10	●	029	8369475	24,65
VBGT110302-PF5	WPP20	10	■	029	5202015*	27,40
VBGT110302-PF5	WSM30	10	●	029	5357560	23,92
VBGT110304-FL2	WPP20G	10	●	029	8369476	27,40
VBGT110304-FL2	WSM01	10	●	029	8369477	24,65
VBGT110304-PF5	WPP20	10	■	029	5202020*	27,40
VBGT110304-PF5	WSM30	10	●	029	5357561	23,92
VBGW110304TM-2	WBH10	2	●	023	7970964	70,10
VBGW110304TM-2	WBH20	2	●	023	7970965	70,10
VBGW160402TM-2	WBH10	2	●	023	7970962	70,10
VBGW160402TM-2	WBH20	2	●	023	7970963	70,10
VBGW160404TM-2	WBH10	2	●	023	7636896	70,10
VBGW160404TM-2	WBH20	2	●	023	7636897	70,10
VBGW160404TM-2	WBH20C	2	●	023	8306536	77,10
VBGW160404TM-2	WBH30	2	●	023	8060987	70,10
VBGW160404TS-2	WBH10	2	●	023	7636895	70,10
VBGW160408TM-2	WBH10	2	●	023	7636899	70,10
VBGW160408TM-2	WBH20	2	●	023	7636900	70,10
VBGW160408TM-2	WBH20C	2	●	023	8306537	77,10
VBGW160408TM-2	WBH30	2	●	023	8060988	70,10
VBGW160408TS-2	WBH10	2	●	023	7636898	70,10
VBMT110302-MM4	WSM01	10	●	029	8461475	16,87
VBMT110304-FK6	WKK10S	10	●	029	6734004	16,37
VBMT110304-FM6	WSM01	10	●	029	8461476	16,87
VBMT110304-FM6	WSM10S	10	●	029	7054157	16,37
VBMT110304-FM6	WSM20S	10	●	029	7054158	16,37
VBMT110304-FM6	WSM30S	10	●	029	7054159	16,37
VBMT110304-FP6	WPP10G	10	●	029	8204682	16,86
VBMT110304-FP6	WPP20G	10	●	029	8204681	16,86
VBMT110304-FP6	WPP20S	10	■	029	6730406*	16,86
VBMT110304-MM4	WMP20S	10	●	029	6787591	16,37
VBMT110304-MM4	WSM01	10	●	029	8190177	16,88
VBMT110304-MM4	WSM10S	10	●	029	7054180	16,37
VBMT110304-MM4	WSM20S	10	●	029	6836848	16,37
VBMT110304-MP4	WPP10G	10	●	029	8204684	16,86
VBMT110304-MP4	WPP20G	10	●	029	8204683	16,86
VBMT110304-MP4	WPP20S	10	■	029	6453026*	16,86
VBMT110308-FM6	WSM10S	10	●	029	7054160	16,37
VBMT110308-FM6	WSM20S	10	●	029	7054161	16,37
VBMT110308-FM6	WSM30S	10	●	029	7054162	16,37
VBMT110308-FP6	WPP10G	10	●	029	8204686	16,86
VBMT110308-FP6	WPP20G	10	●	029	8204685	16,86
VBMT110308-FP6	WPP20S	10	■	029	6730408*	16,86
VBMT110308-MM4	WSM10S	10	●	029	7054181	16,37
VBMT110308-MM4	WSM20S	10	●	029	6836849	16,37
VBMT110308-MP4	WPP10G	10	●	029	8204687	16,86
VBMT110308-MP4	WPP10S	10	■	029	6484435*	16,86
VBMT110308-MP4	WPP20G	10	●	029	8204688	16,86
VBMT160402-MM4	WSM01	10	●	029	8461477	19,38
VBMT160404-FK6	WKK10S	10	●	029	6734008	18,81
VBMT160404-FK6	WKK20S	10	●	029	6734007	18,81

Bezeichnung / Designation	Sorte / Grade	VE / US		Disc. Gr.	Article No.	EURO Stück / piece
VBMT160404-FM6	WSM01	10	●	029	8461478	19,38
VBMT160404-FM6	WSM10S	10	●	029	7054163	18,81
VBMT160404-FM6	WSM20S	10	●	029	7054164	18,81
VBMT160404-FM6	WSM30S	10	●	029	7054165	18,81
VBMT160404-FP6	WPP10G	10	●	029	8204690	19,39
VBMT160404-FP6	WPP10S	10	■	029	6730411[1]	19,39
VBMT160404-FP6	WPP20G	10	●	029	8204689	19,39
VBMT160404-FP6	WPP20S	10	●	029	6730410[2]	19,39
VBMT160404-MK4	WKK10S	10	●	029	6488051	18,81
VBMT160404-MK4	WKK20S	10	●	029	6488029	18,81
VBMT160404-MM4	WMP20S	10	●	029	6636303	18,81
VBMT160404-MM4	WSM01	10	●	029	8190178	19,39
VBMT160404-MM4	WSM10S	10	●	029	6836851	18,81
VBMT160404-MM4	WSM20S	10	●	029	6836850	18,81
VBMT160404-MM4	WSM30S	10	●	029	7054182	18,81
VBMT160404-MP4	WPP10G	10	●	029	8204692	19,39
VBMT160404-MP4	WPP10S	10	●	029	6484466[2]	19,39
VBMT160404-MP4	WPP20G	10	●	029	8204691	19,39
VBMT160404-MP4	WPP20S	10	●	029	6406428[2]	19,39
VBMT160404-MP6	WPP10G	10	●	029	8205090	19,39
VBMT160404-MP6	WPP20G	10	●	029	8205091	19,39
VBMT160404-PS5	WAM20	10	●	029	5025462	19,26
VBMT160404-PS5	WPP10	10	■	029	5200036[1]	19,39
VBMT160404-PS5	WSM10	10	●	029	5848694	18,81
VBMT160404-PS5	WSM20	10	●	029	5619944	18,81
VBMT160406-FK6	WKK20S	10	●	029	6734010	18,81
VBMT160406-FP6	WPP10G	10	●	029	8204694	19,39
VBMT160406-FP6	WPP20G	10	●	029	8204693	19,39
VBMT160406-MP4	WPP10G	10	●	029	8204695	19,39
VBMT160406-MP4	WPP20G	10	●	029	8204696	19,39
VBMT160408-FK6	WKK10S	10	●	029	6734011	18,81
VBMT160408-FK6	WKK20S	10	●	029	6734012	18,81
VBMT160408-FM6	WSM10S	10	●	029	7054166	18,81
VBMT160408-FM6	WSM20S	10	●	029	7054167	18,81
VBMT160408-FP6	WPP10G	10	●	029	8204697	19,39
VBMT160408-FP6	WPP10S	10	●	029	6730415[2]	19,39
VBMT160408-FP6	WPP20G	10	●	029	8204698	19,39
VBMT160408-FP6	WPP20S	10	■	029	6730414[1]	19,39
VBMT160408-MK4	WKK10S	10	●	029	6498357	18,81
VBMT160408-MK4	WKK20S	10	●	029	6498356	18,81
VBMT160408-MM4	WMP20S	10	●	029	6636304	18,81
VBMT160408-MM4	WSM01	10	●	029	8190179	19,39
VBMT160408-MM4	WSM10S	10	●	029	6836853	18,81
VBMT160408-MM4	WSM20S	10	●	029	6836852	18,81
VBMT160408-MM4	WSM30S	10	●	029	7054183	18,81
VBMT160408-MP4	WPP10G	10	●	029	8204699	19,39
VBMT160408-MP4	WPP10S	10	●	029	6484468[2]	19,39
VBMT160408-MP4	WPP20G	10	●	029	8204700	19,39
VBMT160408-MP4	WPP20S	10	●	029	6313082[2]	19,39
VBMT160408-MP6	WPP10G	10	●	029	8205092	19,39
VBMT160408-MP6	WPP20G	10	●	029	8205093	19,39
VBMT160408-PS5	WAM20	10	●	029	5025469	19,26
VBMT160408-PS5	WSM10	10	●	029	5848696	18,81
VBMT160408-PS5	WSM20	10	●	029	5619946	18,81
VBMT160412-FK6	WKK20S	10	●	029	6734013	18,81
VBMT160412-FM6	WSM10S	10	●	029	7054169	18,81
VBMT160412-FM6	WSM20S	10	●	029	7054170	18,81
VBMT160412-FP6	WPP10G	10	●	029	8204702	19,39
VBMT160412-FP6	WPP20G	10	●	029	8204701	19,39
VBMT160412-MK4	WKK20S	10	●	029	6498445	18,81
VBMT160412-MM4	WSM10S	10	●	029	6836855	18,81
VBMT160412-MM4	WSM20S	10	●	029	6836854	18,81
VBMT160412-MP4	WPP10G	10	●	029	8204703	19,39
VBMT160412-MP4	WPP10S	10	■	029	6484608[1]	19,39
VBMT160412-MP4	WPP20G	10	●	029	8204704	19,39
VBMT160412-PS5	WSM20	10	●	029	5619947	18,81
VBMW160404-2	WCB50	1	■	023	5202148[1]	79,40
VCGT1103005M-FP2	WEP10C	10	●	029	7947827	21,53
VCGT110301-FM2	WSM20S	10	●	029	7054077	23,92
VCGT110301-FN2	WNN10	10	●	028	6955668	22,10

Bezeichnung / Designation	Sorte / Grade	VE / US		Disc. Gr.	Article No.	EURO Stück / piece
VCGT110301-MN2	WN10	10	●	028	8133005	18,11
VCGT110301-MN2	WNN10	10	●	028	6955723	22,10
VCGT110301M-FP2	WEP10C	10	●	029	7780049	21,53
VCGT110302-FM2	WSM01	10	●	029	7499381	24,65
VCGT110302-FM2	WSM20S	10	●	029	7054078	23,92
VCGT110302-FN2	WN10	10	●	028	8133006	18,11
VCGT110302-FN2	WNN10	10	●	028	6955669	22,10
VCGT110302-MM4	WSM01	10	●	029	7268537	24,65
VCGT110302-MM4	WSM20S	10	●	029	7268538	23,92
VCGT110302-MN2	WN10	10	●	028	8133007	18,11
VCGT110302-MN2	WNN10	10	●	028	6955724	22,10
VCGT110302-PF2	WSM20	10	●	029	5835001	23,92
VCGT110302-PF2	WXN10	10	●	028	5186704	22,10
VCGT110302-PM2	WXN10	10	●	028	5025600	22,10
VCGT110302FS-1	WDN10	2	●	025	6674557	73,80
VCGT110302M-FP2	WEP10C	10	●	029	7780050	21,53
VCGT110304-FM2	WSM01	10	●	029	7499382	24,65
VCGT110304-FM2	WSM10S	10	●	029	7054079	23,92
VCGT110304-FM2	WSM20S	10	●	029	7054080	23,92
VCGT110304-FN2	WN10	10	●	028	8133008	18,11
VCGT110304-FN2	WNN10	10	●	028	6955670	22,10
VCGT110304-MM4	WSM01	10	●	029	7268648	24,65
VCGT110304-MM4	WSM20S	10	●	029	7268649	23,92
VCGT110304-MN2	WN10	10	●	028	8133009	18,11
VCGT110304-MN2	WNN10	10	●	028	6955725	22,10
VCGT110304-PM2	WXN10	10	●	028	5025601	22,10
VCGT110304FS-1	WDN10	2	●	025	6674558	73,80
VCGT110304M-FP2	WEP10C	10	●	029	7780051	21,53
VCGT110308-MN2	WN10	10	●	028	8133010	18,11
VCGT110308-MN2	WNN10	10	●	028	6955726	22,10
VCGT130301-MN2	WNN10	10	●	028	6955727	23,63
VCGT130302-MN2	WN10	10	●	028	8133011	19,38
VCGT130302-MN2	WNN10	10	●	028	6955728	23,63
VCGT130304-MN2	WN10	10	●	028	8133012	19,38
VCGT130304-MN2	WNN10	10	●	028	6955729	23,63
VCGT160402-FM2	WSM01	10	●	029	7499383	27,40
VCGT160402-FM2	WSM20S	10	●	029	7054081	26,60
VCGT160402-FN2	WN10	10	●	028	8133013	20,12
VCGT160402-FN2	WNN10	10	●	028	6955671	24,55
VCGT160402-MM4	WSM01	10	●	029	7268539	27,40
VCGT160402-MM4	WSM20S	10	●	029	7268640	26,60
VCGT160402M-FP2	WEP10C	10	●	029	7780052	23,94
VCGT160404-FM2	WSM01	10	●	029	7499384	27,40
VCGT160404-FM2	WSM10S	10	●	029	7054082	26,60
VCGT160404-FM2	WSM20S	10	●	029	7054083	26,60
VCGT160404-FN2	WN10	10	●	028	8133014	20,12
VCGT160404-FN2	WNN10	10	●	028	6955672	24,55
VCGT160404-MM4	WSM01	10	●	029	7268650	27,40
VCGT160404-MM4	WSM20S	10	●	029	7268651	26,60
VCGT160404-MN2	WN10	10	●	028	8133015	20,12
VCGT160404-MN2	WNN10	10	●	028	6955730	24,55
VCGT160404-MN2	WSM01	10	●	029	6876633	27,40
VCGT160404-PF2	WXN10	10	●	028	5198017	24,55
VCGT160404-PM2	WXN10	10	●	028	5194852	24,55
VCGT160404FS-1	WDN10	2	●	025	6674459	77,10
VCGT160404M-FP2	WEP10C	10	●	029	7780021	23,94
VCGT160408-FM2	WSM10S	10	●	029	7054084	26,60
VCGT160408-FM2	WSM20S	10	●	029	7054085	26,60
VCGT160408-FN2	WN10	10	●	028	8133016	20,12
VCGT160408-FN2	WNN10	10	●	028	6955673	24,55
VCGT160408-MM4	WSM01	10	●	029	7268652	27,40
VCGT160408-MM4	WSM20S	10	●	029	7268653	26,60
VCGT160408-MN2	WN10	10	●	028	8133017	20,12
VCGT160408-MN2	WNN10	10	●	028	6955731	24,55
VCGT160408-MN2	WSM01	10	●	029	6876634	27,40
VCGT160408-PM2	WXN10	10	●	028	5025604	24,55
VCGT160408FS-1	WDN10	2	●	025	6674559	77,10
VCGT160408M-FP2	WEP10C	10	●	029	7780053	23,94
VCGT160412-MN2	WN10	10	●	028	8133018	20,12
VCGT160412-MN2	WNN10	10	●	028	6955732	24,55

Bezeichnung / Designation	Sorte / Grade	VE / US		Disc. Gr.	Article No.	EURO Stück / piece
VCGW110302EM-2	WBS10	2	●	023	7636893	73,80
VCGW110302FS-1	WDN10	2	●	025	6674455	71,70
VCGW110302TS-2	WBH20C	2	●	023	8306535	77,10
VCGW110304EM-2	WBS10	2	●	023	7636894	73,80
VCGW110304FS-1	WDN10	2	●	025	6674456	71,70
VCGW110308FS-1	WDN10	2	●	025	6674556	71,70
VCGW160404EM-2	WBS10	2	●	023	7636903	73,80
VCGW160404FS-1	WDN10	2	●	025	6674457	74,80
VCGW160404TM-2	WBH10	2	●	023	7636902	70,10
VCGW160404TS-2	WBH10	2	●	023	7636901	70,10
VCGW160408EM-2	WBS10	2	●	023	7636906	73,80
VCGW160408FS-1	WDN10	2	●	025	6674458	74,80
VCGW160408TM-2	WBH10	2	●	023	7636905	70,10
VCGW160408TS-2	WBH10	2	●	023	7636904	70,10
VCGX0902ACFR	WSP45G	10	●	019	7975413	23,85
VCGX0902ACFR	WXP30	10	●	019	6640284	21,24
VCGX0902ACFR	WXP40	10	●	019	7975412	21,24
VCMT110302-FM4	WMP20S	10	●	029	6465250	16,37
VCMT110302-FM4	WSM01	10	●	029	8190168	16,88
VCMT110302-FM4	WSM10S	10	●	029	6839064	16,37
VCMT110302-FM4	WSM20S	10	●	029	6839065	16,37
VCMT110302-FM4	WSM30S	10	●	029	6839066	16,37
VCMT110302-FP4	WEP10C	10	●	029	7425546	14,74
VCMT110302-FP4	WKP01G	10	●	029	8422898	16,86
VCMT110302-FP4	WPP10G	10	●	029	8204706	16,86
VCMT110302-FP4	WPP20G	10	●	029	8204705	16,86
VCMT110302-FP4	WPP20S	10	●	029	6440629[1]	16,86
VCMT110302-PF4	WSM10	10	●	029	5848698	16,37
VCMT110304-FM4	WMP20S	10	●	029	6465273	16,37
VCMT110304-FM4	WSM01	10	●	029	8190169	16,88
VCMT110304-FM4	WSM10S	10	●	029	6839067	16,37
VCMT110304-FM4	WSM20S	10	●	029	6839068	16,37
VCMT110304-FM4	WSM30S	10	●	029	6839069	16,37
VCMT110304-FP4	WEP10C	10	●	029	7425547	14,74
VCMT110304-FP4	WKP01G	10	●	029	8422899	16,86
VCMT110304-FP4	WPP10G	10	●	029	8204707	16,86
VCMT110304-FP4	WPP10S	10	■	029	6440238[2]	16,86
VCMT110304-FP4	WPP20G	10	●	029	8204708	16,86
VCMT110304-FP4	WPP20S	10	■	029	6440671[2]	16,86
VCMT110304-PF4	WSM10	10	●	029	5848699	16,37
VCMT110304-PF4	WSM20	10	●	029	5615075	16,37
VCMT110304-RK4	WKK20S	10	●	029	6651154	16,37
VCMT110304-RM4	WMP20S	10	●	029	6955960	16,37
VCMT110304-RM4	WSM10S	10	●	029	6917320	16,37
VCMT110304-RM4	WSM20S	10	●	029	6917321	16,37
VCMT110304-RM4	WSM30S	10	●	029	6917322	16,37
VCMT110304-RP4	WPP10G	10	●	029	8204710	16,86
VCMT110304-RP4	WPP20G	10	●	029	8204709	16,86
VCMT110304-RP4	WPP20S	10	■	029	6449797[2]	16,86
VCMT110304-RP4	WPP30G	10	●	029	8204711	16,86
VCMT110308-RK4	WKK10S	10	●	029	6651155	16,37
VCMT110308-RK4	WKK20S	10	●	029	6651156	16,37
VCMT110308-RM4	WSM20S	10	●	029	6917323	16,37
VCMT110308-RM4	WSM30S	10	●	029	6917324	16,37
VCMT110308-RP4	WPP10G	10	●	029	8204713	16,86
VCMT110308-RP4	WPP20G	10	●	029	8204712	16,86
VCMT110308-RP4	WPP20S	10	■	029	6449799[2]	16,86
VCMT160402-FM4	WMP20S	10	●	029	6465364	18,81
VCMT160402-FM4	WSM10S	10	●	029	6839070	18,81
VCMT160402-FM4	WSM20S	10	●	029	6839071	18,81
VCMT160402-FM4	WSM30S	10	●	029	6839072	18,81
VCMT160402-FP4	WEP10C	10	●	029	7425548	16,94
VCMT160402-FP4	WKP01G	10	●	029	8422900	19,39
VCMT160402-FP4	WPP10G	10	●	029	8204715	19,39
VCMT160402-FP4	WPP20G	10	●	029	8204714	19,39
VCMT160402-FP4	WPP20S	10	■	029	6440672[2]	19,39
VCMT160404-FM4	WMP20S	10	●	029	6465441	18,81
VCMT160404-FM4	WSM01	10	●	029	8190170	19,39
VCMT160404-FM4	WSM10S	10	●	029	6839073	18,81
VCMT160404-FM4	WSM20S	10	●	029	6839074	18,81

Bezeichnung / Designation	Sorte / Grade	VE / US		Disc. Gr.	Article No.	EURO Stück / piece
VCMT160404-FM4	WSM30S	10	●	029	6839075	18,81
VCMT160404-FP4	WEP10C	10	●	029	7425549	16,94
VCMT160404-FP4	WKP01G	10	●	029	8422901	19,39
VCMT160404-FP4	WPP10G	10	●	029	8204717	19,39
VCMT160404-FP4	WPP10S	10	●	029	6440432[1]	19,39
VCMT160404-FP4	WPP20G	10	●	029	8204716	19,39
VCMT160404-FP4	WPP20S	10	●	029	6440673[1]	19,39
VCMT160404-MM4	WMP20S	10	●	029	7975383	18,81
VCMT160404-MM4	WSM10S	10	●	029	7975381	18,81
VCMT160404-MM4	WSM20S	10	●	029	7975382	18,81
VCMT160404-MP4	WPP10G	10	●	029	8204718	19,39
VCMT160404-MP4	WPP20G	10	●	029	8204719	19,39
VCMT160404-PF4	WPP01	10	■	029	5262939[2]	19,39
VCMT160404-PM5	WPP20	10	■	029	5199764[2]	19,39
VCMT160404-RK4	WKK10S	10	●	029	6651157	18,81
VCMT160404-RK4	WKK20S	10	●	029	6651158	18,81
VCMT160404-RM4	WMP20S	10	●	029	6462663	18,81
VCMT160404-RM4	WSM10S	10	●	029	6839141	18,81
VCMT160404-RM4	WSM20S	10	●	029	6839142	18,81
VCMT160404-RM4	WSM30S	10	●	029	6839143	18,81
VCMT160404-RP4	WPP10G	10	●	029	8204722	19,39
VCMT160404-RP4	WPP10S	10	■	029	6442806[2]	19,39
VCMT160404-RP4	WPP20G	10	●	029	8204720	19,39
VCMT160404-RP4	WPP20S	10	■	029	6449901[2]	19,39
VCMT160404-RP4	WPP30G	10	●	029	8204721	19,39
VCMT160404-RP4	WPP30S	10	■	029	6449902[2]	19,39
VCMT160406-RP4	WPP10G	10	●	029	8204724	19,39
VCMT160406-RP4	WPP10S	10	■	029	6442884[2]	19,39
VCMT160406-RP4	WPP20G	10	●	029	8204723	19,39
VCMT160406-RP4	WPP20S	10	■	029	6449903[2]	19,39
VCMT160408-FM4	WMP20S	10	●	029	6465899	18,81
VCMT160408-FM4	WSM01	10	●	029	8190171	19,39
VCMT160408-FM4	WSM10S	10	●	029	6839076	18,81
VCMT160408-FM4	WSM20S	10	●	029	6839077	18,81
VCMT160408-FM4	WSM30S	10	●	029	6839078	18,81
VCMT160408-FP4	WEP10C	10	●	029	7425550	16,94
VCMT160408-FP4	WKP01G	10	●	029	8422902	19,39
VCMT160408-FP4	WPP10G	10	●	029	8204725	19,39
VCMT160408-FP4	WPP10S	10	●	029	6440437[1]	19,39
VCMT160408-FP4	WPP20G	10	●	029	8201087	19,39
VCMT160408-FP4	WPP20S	10	●	029	6440675[1]	19,39
VCMT160408-MM4	WMP20S	10	●	029	7975388	18,81
VCMT160408-MM4	WSM10S	10	●	029	7975386	18,81
VCMT160408-MM4	WSM20S	10	●	029	7975387	18,81
VCMT160408-MP4	WPP10G	10	●	029	8204726	19,39
VCMT160408-MP4	WPP20G	10	●	029	8204727	19,39
VCMT160408-PF4	WPP01	10	■	029	5262940[2]	19,39
VCMT160408-PF4	WPP10	10	■	029	5199956[2]	19,39
VCMT160408-PF4	WSM10	10	●	029	5848722	18,81
VCMT160408-PM5	WPP20	10	■	029	5199772[2]	19,39
VCMT160408-RK4	WKK10S	10	●	029	6651159	18,81
VCMT160408-RK4	WKK20S	10	●	029	6651160	18,81
VCMT160408-RM4	WMP20S	10	●	029	6462630	18,81
VCMT160408-RM4	WSM10S	10	●	029	6839144	18,81
VCMT160408-RM4	WSM20S	10	●	029	6839145	18,81
VCMT160408-RM4	WSM30S	10	●	029	6839146	18,81
VCMT160408-RP4	WPP10G	10	●	029	8204728	19,39
VCMT160408-RP4	WPP10S	10	■	029	6442994[2]	19,39
VCMT160408-RP4	WPP20G	10	●	029	8204729	19,39
VCMT160408-RP4	WPP20S	10	■	029	6449906[2]	19,39
VCMT160408-RP4	WPP30G	10	●	029	8204730	19,39
VCMT160408-RP4	WPP30S	10	■	029	6449907[2]	19,39
VCMT160412-RK4	WKK10S	10	●	029	6651161	18,81
VCMT160412-RK4	WKK20S	10	●	029	6651162	18,81
VCMT160412-RM4	WSM20S	10	●	029	6917325	18,81
VCMT160412-RM4	WSM30S	10	●	029	6917326	18,81
VCMT160412-RP4	WPP10G	10	●	029	8204732	19,39
VCMT160412-RP4	WPP10S	10	■	029	6442998[2]	19,39
VCMT160412-RP4	WPP20G	10	●	029	8204731	19,39
VCMT160412-RP4	WPP20S	10	■	029	6449908[2]	19,39

Bezeichnung / Designation	Sorte / Grade	VE / US		Disc. Gr.	Article No.	EURO Stück / piece
VCMT160412-RP4	WPP30G	10	●	029	8204733	19,39
VCMW160404-RK6	WKK10S	10	●	029	6651598	18,81
VCMW160404-RK6	WKK20S	10	●	029	6651599	18,81
VCMW160408-RK6	WKK10S	10	●	029	6651600	18,81
VCMW160408-RK6	WKK20S	10	●	029	6651601	18,81
VCMW160412-RK6	WKK10S	10	●	029	6651602	18,81
VNGA160404SM-S	WCH10C	10	●	024	8064422	23,52
VNGA160404TM-2	WBH10	2	●	023	7636841	68,10
VNGA160404TM-2	WBH10C	2	●	023	7636842	74,90
VNGA160404TM-2	WBH20	2	●	023	7636843	68,10
VNGA160404TM-2	WBH30	2	●	023	8060976	68,10
VNGA160404TS-2	WBK20	2	●	023	7823855	68,10
VNGA160408SM-S	WCH10C	10	●	024	8064423	23,52
VNGA160408TM-2	WBH10	2	●	023	7636844	68,10
VNGA160408TM-2	WBH10C	2	●	023	7636845	74,90
VNGA160408TM-2	WBH20	2	●	023	7636846	68,10
VNGA160408TS-2	WBK20	2	●	023	7823856	68,10
VNGA160412SM-S	WCH10C	10	●	024	8064424	23,52
VNGG160401-MS3	WSM01	10	●	027	7021462	39,60
VNGG160402-MS3	WSM01	10	●	027	7021463	39,60
VNGG160402M-MN3	WN10	10	●	028	7749894	29,20
VNGG160402M-MN3	WNN10	10	●	028	7778121	40,90
VNGG160404-MS3	WSM01	10	●	027	7021464	39,60
VNGG160404-NFT	WS10	10	●	027	5638566	29,20
VNGG160404M-MN3	WN10	10	●	028	7749895	29,20
VNGG160404M-MN3	WNN10	10	●	028	7778122	40,90
VNGG160408-NFT	WS10	10	●	027	5640947	29,20
VNGG160412-NFT	WS10	10	●	027	6249340	29,20
VNMA160408-RK5	WKK10S	10	●	027	6411281	25,60
VNMA160408-RK5	WKK20S	10	●	027	6406858	25,60
VNMA160412-RK5	WKK10S	10	●	027	6411284	25,60
VNMA160412-RK5	WKK20S	10	●	027	6408234	25,60
VNMG160402-FM5	WSM10S	10	●	027	7091930	25,60
VNMG160402-FM5	WSM20S	10	●	027	7091931	25,60
VNMG160404-FM5	WSM10S	10	●	027	7091932	25,60
VNMG160404-FM5	WSM20S	10	●	027	7091933	25,60
VNMG160404-FP5	WEP10C	10	●	027	8136994	23,07
VNMG160404-FP5	WKP01G	10	●	027	8422903	26,40
VNMG160404-FP5	WPP10G	10	●	027	8115958	26,40
VNMG160404-FP5	WPP10S	10	■	027	6059572[1]	26,40
VNMG160404-FP5	WPP20G	10	●	027	8115959	26,40
VNMG160404-FP5	WPP20S	10	■	027	6065935[1]	26,40
VNMG160404-MK5	WKK10S	10	●	027	6361397	25,60
VNMG160404-MK5	WKK20S	10	●	027	6150420	25,60
VNMG160404-MM5	WMP20S	10	●	027	7376611	25,60
VNMG160404-MM5	WSM10S	10	●	027	7251974	25,60
VNMG160404-MM5	WSM20S	10	●	027	7251975	25,60
VNMG160404-MM5	WSM30S	10	●	027	7251976	25,60
VNMG160404-MP3	WPP10G	10	●	027	8115962	26,40
VNMG160404-MP3	WPP20G	10	●	027	8115963	26,40
VNMG160404-MP5	WPP10G	10	●	027	8115969	26,40
VNMG160404-MP5	WPP20G	10	●	027	8115970	26,40
VNMG160404-MP5	WPP30G	10	●	027	8115971	26,40
VNMG160404-MS3	WSM01	10	●	027	6890878	26,40
VNMG160404-MS3	WSM10S	10	●	027	6890829	25,60
VNMG160404-NFT	WS10	10	●	027	5829391	19,52
VNMG160404-NFT	WSM20S	10	●	027	7053966	25,60
VNMG160404-NMS	WSM10S	10	●	027	7053861	25,60
VNMG160404-NMS	WSM20S	10	●	027	7053862	25,60
VNMG160408-FM5	WSM10S	10	●	027	7091934	25,60
VNMG160408-FM5	WSM20S	10	●	027	7091935	25,60
VNMG160408-FP5	WEP10C	10	●	027	8136995	23,07
VNMG160408-FP5	WKP01G	10	●	027	8422904	26,40
VNMG160408-FP5	WPP10G	10	●	027	8115553	26,40
VNMG160408-FP5	WPP10S	10	●	027	6060078[2]	26,40
VNMG160408-FP5	WPP20G	10	●	027	8115554	26,40
VNMG160408-FP5	WPP20S	10	■	027	6065936[1]	26,40
VNMG160408-MK5	WKK10S	10	●	027	6361399	25,60
VNMG160408-MK5	WKK20S	10	●	027	6150787	25,60
VNMG160408-MM5	WMP20S	10	●	027	7376612	25,60

Bezeichnung / Designation	Sorte / Grade	VE / US		Disc. Gr.	Article No.	EURO Stück / piece
VNMG160408-MM5	WSM10S	10	●	027	7251977	25,60
VNMG160408-MM5	WSM20S	10	●	027	7251978	25,60
VNMG160408-MM5	WSM30S	10	●	027	7251979	25,60
VNMG160408-MP3	WPP10G	10	●	027	8115964	26,40
VNMG160408-MP3	WPP10S	10	■	027	6182151[1]	26,40
VNMG160408-MP3	WPP20G	10	●	027	8115965	26,40
VNMG160408-MP3	WPP20S	10	■	027	6182152[1]	26,40
VNMG160408-MP3	WPP30G	10	●	027	8115966	26,40
VNMG160408-MP5	WPP05G	10	●	027	8411481	26,40
VNMG160408-MP5	WPP10G	10	●	027	8115972	26,40
VNMG160408-MP5	WPP10S	10	●	027	6252577[2]	26,40
VNMG160408-MP5	WPP20G	10	●	027	8115973	26,40
VNMG160408-MP5	WPP20S	10	■	027	6227215[1]	26,40
VNMG160408-MP5	WPP30G	10	●	027	8115974	26,40
VNMG160408-MS3	WSM01	10	●	027	6890879	26,40
VNMG160408-MS3	WSM10S	10	●	027	6890840	25,60
VNMG160408-NF3	WPP01	10	■	027	5263259[1]	26,40
VNMG160408-NFT	WS10	10	●	027	5829390	19,52
VNMG160408-NFT	WSM20S	10	●	027	7053967	25,60
VNMG160408-NMS	WSM10	10	●	027	5908284	25,60
VNMG160408-NMS	WSM10S	10	●	027	7053863	25,60
VNMG160408-NMS	WSM20S	10	●	027	7053864	25,60
VNMG160412-FP5	WPP10G	10	●	027	8115960	26,40
VNMG160412-FP5	WPP10S	10	■	027	7268656[1]	26,40
VNMG160412-FP5	WPP20G	10	●	027	8115961	26,40
VNMG160412-MK5	WKK10S	10	●	027	6361491	25,60
VNMG160412-MK5	WKK20S	10	●	027	6152369	25,60
VNMG160412-MP3	WPP10G	10	●	027	8115967	26,40
VNMG160412-MP3	WPP10S	10	■	027	6182155[1]	26,40
VNMG160412-MP3	WPP20G	10	●	027	8115968	26,40
VNMG160412-MP5	WPP05G	10	●	027	8411482	26,40
VNMG160412-MP5	WPP10G	10	●	027	8115975	26,40
VNMG160412-MP5	WPP20G	10	●	027	8115976	26,40
VNMG160412-MP5	WPP30G	10	●	027	8115977	26,40
VNMG220408-MP5	WPP10G	10	●	027	8115978	34,30
VNMG220408-MP5	WPP20G	10	●	027	8115979	34,30
W1010-1616N-WL17-P		1	●	060	8341680	212,00
W1010-2020N-WL25-P		1	●	060	8026803	242,00
W1010-2525N-WL25-P		1	●	060	8026804	255,00
W1010-C4N-WL25-P		1	●	060	8320856	381,00
W1010-C5N-WL25-P		1	●	060	8320857	423,00
W1010-C6N-WL25-P		1	●	060	8320858	486,00
W1010.12N-WL25-P		1	●	060	8026838	242,00
W1010.16N-WL25-P		1	●	060	8026839	255,00
W1011-1212L-WL17-S-P		1	●	060	8341446	212,00
W1011-1212R-WL17-S-P		1	●	060	8341441	212,00
W1011-1616L-WL17-S-P		1	●	060	8341447	212,00
W1011-1616L-WL25		1	●	060	8026805	114,00
W1011-1616L-WL25-P		1	●	060	8320852	212,00
W1011-1616R-WL17-S-P		1	●	060	8341448	212,00
W1011-1616R-WL25		1	●	060	8026806	114,00
W1011-1616R-WL25-P		1	●	060	8320853	212,00
W1011-2020L-WL17-P		1	●	060	8341442	242,00
W1011-2020L-WL25		1	●	060	8026807	129,00
W1011-2020L-WL25-P		1	●	060	7960360	242,00
W1011-2020R-WL17-P		1	●	060	8341449	242,00
W1011-2020R-WL25		1	●	060	8026808	129,00
W1011-2020R-WL25-P		1	●	060	7960361	242,00
W1011-2525L-WL25		1	●	060	8026809	139,00
W1011-2525L-WL25-P		1	●	060	7960362	255,00
W1011-2525R-WL25		1	●	060	8026820	139,00
W1011-2525R-WL25-P		1	●	060	7960363	255,00
W1011-3225L-WL25-P		1	●	060	8320854	280,00
W1011-3225R-WL25-P		1	●	060	8320855	280,00
W1011-C4L-WL25-P		1	●	065	8026884	381,00
W1011-C4R-WL25-P		1	●	065	8026885	381,00
W1011-C5L-WL25-P		1	●	065	8026886	423,00
W1011-C5R-WL25-P		1	●	065	8026887	423,00
W1011-C6L-WL25-P		1	●	065	8026888	486,00
W1011-C6R-WL25-P		1	●	065	8026889	486,00

Bezeichnung / Designation	Sorte / Grade	VE / US		Disc. Gr.	Article No.	EURO Stück / piece
W1011.12L-WL25-P		1	●	060	7960369	242,00
W1011.12R-WL25-P		1	●	060	7960380	242,00
W1011.16L-WL25-P		1	●	060	7960381	255,00
W1011.16R-WL25-P		1	●	060	7960382	255,00
W1210-12ML-WL17		1	●	060	8341685	164,00
W1210-12MR-WL17		1	●	060	8341686	164,00
W1210-16RL-WL17		1	●	060	8341687	164,00
W1210-16RR-WL17		1	●	060	8341445	164,00
W1210-20SL-WL17		1	●	060	8341688	201,00
W1210-20SR-WL17		1	●	060	8341689	201,00
W1210-25TL-WL25		1	●	060	8138089	266,00
W1210-25TR-WL25		1	●	060	8138210	266,00
W1210-32TL-WL25		1	●	060	8138211	323,00
W1210-32TR-WL25		1	●	060	8138212	323,00
W1210-40TL-WL25		1	●	060	8138213	368,00
W1210-40TR-WL25		1	●	060	8138214	368,00
W1211-12ML-WL17		1	●	060	8341443	164,00
W1211-12MR-WL17		1	●	060	8341681	164,00
W1211-16RL-WL17		1	●	060	8341682	164,00
W1211-16RR-WL17		1	●	060	8341683	164,00
W1211-20SL-WL17		1	●	060	8341684	201,00
W1211-20SR-WL17		1	●	060	8341444	201,00
W1211-25TL-WL25		1	●	060	8138215	266,00
W1211-25TR-WL25		1	●	060	8138216	266,00
W1211-32TL-WL25		1	●	060	8138217	323,00
W1211-32TR-WL25		1	●	060	8138218	323,00
W1211-40TL-WL25		1	●	060	8153919	368,00
W1211-40TR-WL25		1	●	060	8154040	368,00
W1211-Q32L-WL25		1	●	060	8320901	396,00
W1211-Q32R-WL25		1	●	060	8320902	396,00
W1211-Q40L-WL25		1	●	060	8320903	417,00
W1211-Q40R-WL25		1	●	060	8320904	417,00
W1211-Q50L-WL25		1	●	060	8320905	437,00
W1211-Q50R-WL25		1	●	060	8320906	437,00
W1211.16TL-WL25		1	●	060	8320907	266,00
W1211.16TR-WL25		1	●	060	8320908	266,00
W1211.20TL-WL25		1	●	060	8320909	323,00
W1211.20TR-WL25		1	●	060	8320920	323,00
WCGT020102-FN2	WNN10	10	●	028	7629771	17,18
WCGT020102-X15	WAK15	10	●	019	5015721	18,60
WCGT020102-X15	WK1	10	●	019	5004182	14,09
WCGT020102-X15	WTP35	10	●	019	5004378	18,60
WCGT020102-X15	WXM15	10	●	019	5004436	18,60
WCGT020102-X25	WK1	10	●	019	5004183	14,09
WCGT020102-X5	WAK15	10	●	019	5015723	18,60
WCGT020102-X5	WK1	10	●	019	5004181	14,09
WCGT020102-X5	WTP35	10	●	019	5004377	18,60
WCGT020102-X5	WXM15	10	●	019	5004416	18,60
WCGT020104-FN2	WNN10	10	●	028	7629772	17,18
WCGT020104-X15	WAK15	10	●	019	5015724	18,60
WCGT020104-X15	WTP35	10	●	019	5004404	18,60
WCGT020104-X15	WXM15	10	●	019	5004438	18,60
WCGT020104-X5	WAK15	10	●	019	5015726	18,60
WCGT020104-X5	WTP35	10	●	019	5004403	18,60
WCGT020104-X5	WXM15	10	●	019	5004418	18,60
WCGT030202-FM2	WSM21	10	●	029	7054086	18,60
WCGT030202-FN2	WNN10	10	●	028	6955674	17,18
WCGT030202-MN2	WNN10	10	●	028	6955733	17,18
WCGT030202-X15	WAK15	10	●	019	5015727	18,60
WCGT030202-X15	WK1	10	●	019	5004155	14,09
WCGT030202-X15	WTP35	10	●	019	5004279	18,60
WCGT030202-X15	WXM15	10	●	019	5004440	18,60
WCGT030202-X25	WK1	10	●	019	5004156	14,09
WCGT030202-X5	WAK15	10	●	019	5015729	18,60
WCGT030202-X5	WTP35	10	●	019	5004281	18,60
WCGT030202-X5	WXM15	10	●	019	5004420	18,60
WCGT030204-FM2	WSM21	10	●	029	7054087	18,60
WCGT030204-FN2	WNN10	10	●	028	6955675	17,18
WCGT030204-MN2	WNN10	10	●	028	6955734	17,18
WCGT030204-X15	WAK15	10	●	019	5015730	18,60

Bezeichnung / Designation	Sorte / Grade	VE / US		Disc. Gr.	Article No.	EURO Stück / piece
WCGT030204-X15	WTP35	10	●	019	5004407	18,60
WCGT030204-X15	WXM15	10	●	019	5004442	18,60
WCGT030204-X25	WK1	10	●	019	5004193	14,09
WCGT030204-X5	WAK15	10	●	019	5015732	18,60
WCGT030204-X5	WTP35	10	●	019	5004406	18,60
WCGT030204-X5	WXM15	10	●	019	5004422	18,60
WCGT040202-FM2	WSM21	10	●	029	7054088	18,81
WCGT040202-FN2	WNN10	10	●	028	6955676	17,36
WCGT040202-X15	WAK15	10	●	019	5015736	18,81
WCGT040202-X15	WTP35	10	●	019	5004282	18,81
WCGT040202-X15	WXM15	10	●	019	5004446	18,81
WCGT040202-X5	WAK15	10	●	019	5015738	18,81
WCGT040202-X5	WK1	10	●	019	5004157	14,23
WCGT040202-X5	WTP35	10	●	019	5004284	18,81
WCGT040204-FM2	WSM21	10	●	029	7054089	18,81
WCGT040204-FN2	WNN10	10	●	028	6955677	17,36
WCGT040204-MN2	WNN10	10	●	028	6955735	17,36
WCGT040204-X15	WAK15	10	●	019	5015739	18,81
WCGT040204-X15	WTP35	10	●	019	5004285	18,81
WCGT040204-X15	WXM15	10	●	019	5004448	18,81
WCGT040204-X25	WK1	10	●	019	5004176	14,23
WCGT040204-X5	WAK15	10	●	019	5015741	18,81
WCGT040204-X5	WTP35	10	●	019	5004287	18,81
WCGT040204-X5	WXM15	10	●	019	5004428	18,81
WCGT050304-X15	WAK15	10	●	019	5015745	20,43
WCGT050304-X15	WTP35	10	●	019	5004291	18,56
WCGT050304-X15	WXM15	10	●	019	5004452	18,12
WCGT050304-X25	WK1	10	●	019	5004179	14,86
WCGT050304-X5	WAK15	10	●	019	5015747	20,43
WCGT050304-X5	WK1	10	●	019	5004180	14,86
WCGT050304-X5	WTP35	10	●	019	5004293	18,56
WCGT050304-X5	WXM15	10	●	019	5004432	18,12
WCGT06T302-MN2	WNN10	10	●	028	6955736	18,12
WCGT06T304-FN2	WNN10	10	●	028	6955678	18,12
WCGT06T304-MN2	WNN10	10	●	028	6955737	18,12
WCGT06T304-PM2	WK1	10	●	028	5024971	14,86
WCGT06T308-FN2	WNN10	10	●	028	6955679	18,12
WCGT080404-MN2	WNN10	10	●	028	6955738	21,62
WCGT080408-MN2	WNN10	10	●	028	6955739	21,62
WCGT080408-PM2	WK1	10	●	028	5024973	17,74
WCMT030202-RM4	WSM20S	10	●	029	6917327	10,29
WCMT030202-RP4	WPP20G	10	●	029	8205033	10,60
WCMT030204-E47	WPP20S	10	●	019	7077880	10,29
WCMT030204-E47	WSM20S	10	●	019	7077881	10,29
WCMT040202-FM4	WSM20S	10	●	029	6917287	10,50
WCMT040202-FM4	WSM30S	10	●	029	6917288	10,50
WCMT040202-FP4	WPP10G	10	●	029	8205035	10,80
WCMT040202-FP4	WPP20G	10	●	029	8205034	10,80
WCMT040202-RM4	WSM20S	10	●	029	6917328	10,50
WCMT040202-RM4	WSM30S	10	●	029	6917329	10,50
WCMT040204-E47	WPP20S	10	●	019	7077882	10,50
WCMT040204-E47	WSM20S	10	●	019	7077883	10,50
WCMT040204-FM4	WSM20S	10	●	029	6917289	10,50
WCMT040204-FM4	WSM30S	10	●	029	6917290	10,50
WCMT040204-FP4	WPP10G	10	●	029	8205037	10,80
WCMT040204-FP4	WPP20G	10	●	029	8205036	10,80
WCMT040204-FP6	WPP20G	10	●	029	8205038	10,80
WCMT040204-PF	WPP20S	10	●	029	6965696*	11,93
WCMT040204-RK4	WKK20S	10	●	029	6651164	10,50
WCMT040204-RM4	WSM20S	10	●	029	6917330	10,50
WCMT040204-RM4	WSM30S	10	●	029	6917331	10,50
WCMT040204-RP4	WPP10S	10	■	029	6444279*	10,80
WCMT040204-RP4	WPP20G	10	●	029	8205039	10,80
WCMT040204-RP4	WPP20S	10	■	029	6445330*	10,80
WCMT040208-FP4	WPP20G	10	●	029	8205040	10,80
WCMT040208-FP6	WPP20G	10	●	029	8205041	10,80
WCMT06T302-FP4	WPP20G	10	●	029	8205042	13,25
WCMT06T304-E47	WPP20S	10	●	019	7077884	12,88
WCMT06T304-FM4	WSM20S	10	●	029	6917291	12,88
WCMT06T304-FM4	WSM30S	10	●	029	6917292	12,88

Bezeichnung / Designation	Sorte / Grade	VE / US		Disc. Gr.	Article No.	EURO Stück / piece
WCMT06T304-FP4	WPP20G	10	●	029	8205043	13,25
WCMT06T304-MK4	WKK20S	10	●	029	6498449[1]	12,88
WCMT06T304-MM4	WSM20S	10	●	029	6836856	12,88
WCMT06T304-MP4	WPP20G	10	●	029	8205044	13,25
WCMT06T304-RK4	WKK20S	10	●	029	6651166	12,88
WCMT06T304-RM4	WSM20S	10	●	029	6917332	12,88
WCMT06T304-RM4	WSM30S	10	●	029	6917333	12,88
WCMT06T304-RP4	WPP20G	10	●	029	8205045	13,25
WCMT06T308-E47	WSM20S	10	●	019	7077887	12,88
WCMT06T308-FM4	WSM20S	10	●	029	6917293	12,88
WCMT06T308-FP4	WPP20G	10	●	029	8205046	13,25
WCMT06T308-MM4	WSM20S	10	●	029	6836857	12,88
WCMT06T308-MP4	WPP20G	10	●	029	8205047	13,25
WCMT06T308-PF	WPP20S	10	●	029	6965698[2]	14,78
WCMT06T308-RK4	WKK20S	10	●	029	6651168	12,88
WCMT06T308-RM4	WSM20S	10	●	029	6917334	12,88
WCMT06T308-RM4	WSM30S	10	●	029	6917335	12,88
WCMT06T308-RP4	WPP20G	10	●	029	8205049	13,25
WCMT06T308-RP4	WPP30G	10	●	029	8205048	13,25
WCMT080404-FP4	WPP20G	10	●	029	8205050	18,89
WCMT080404-RK4	WKK20S	10	●	029	6651169	18,35
WCMT080404-RP4	WPP20G	10	●	029	8205051	18,89
WCMT080408-FP4	WPP20G	10	●	029	8205052	18,89
WCMT080408-RK4	WKK20S	10	●	029	6651170	18,35
WCMT080408-RM4	WSM20S	10	●	029	6917336	18,35
WCMT080408-RM4	WSM30S	10	●	029	6917337	18,35
WCMT080408-RP4	WPP20G	10	●	029	8205053	18,89
WCMT080408-RP4	WPP20S	10	■	029	6448827[2]	18,89
WCMT080408-RP4	WPP30G	10	●	029	8205054	18,89
WCMT080412-RK4	WKK20S	10	●	029	6651171	18,35
WCMT080412-RM4	WSM20S	10	●	029	6917338	18,35
WCMT080412-RP4	WPP20G	10	●	029	8205055	18,89
WCMW020102	WCB50	1	●	013	5043154	57,10
WCMW020102	WCB80	1	●	013	5043155	57,10
WCMW020104	WCB50	1	●	013	5045327	57,10
WCMW020104	WCD10	1	●	014	5043147	82,50
WCMW030202	WCB50	1	●	013	5043156	57,10
WCMW030202	WCB80	1	●	013	5043157	57,10
WCMW030202	WCD10	1	●	014	5043148	82,50
WCMW030204	WCB50	1	●	013	5042656	57,10
WCMW030204	WCB80	1	●	013	5043158	57,10
WCMW030204	WCD10	1	●	014	5043149	82,50
WCMW040202	WCB50	1	●	013	5043159	57,10
WCMW040202	WCD10	1	●	014	5043151	82,50
WCMW040204	WCB50	1	●	013	5043161	57,10
WCMW040204	WCB80	1	●	013	5042657	57,10
WCMW040204	WCD10	1	●	014	5043152	82,50
WCMW050304	WCB50	1	●	013	5043162	57,10
WCMW050304	WCB80	1	●	013	5043163	57,10
WCMW050304	WCD10	1	●	014	5043153	82,50
WL17-VC0502L-FM4	WSM10S	10	●	029	8340684	20,58
WL17-VC0502L-FM4	WSM20S	10	●	029	8341208	20,58
WL17-VC0502N-FM4	WSM10S	10	●	029	8340683	20,58
WL17-VC0502N-FM4	WSM20S	10	●	029	8341203	20,58
WL17-VC0502R-FM4	WSM10S	10	●	029	8341213	20,58
WL17-VC0502R-FM4	WSM20S	10	●	029	8340685	20,58
WL17-VC0504L-FM4	WSM10S	10	●	029	8341209	20,58
WL17-VC0504L-FM4	WSM20S	10	●	029	8341210	20,58
WL17-VC0504N-FM4	WSM10S	10	●	029	8341204	20,58
WL17-VC0504N-FM4	WSM20S	10	●	029	8341205	20,58
WL17-VC0504N-FP4	WPP20G	10	●	029	8340686	21,20
WL17-VC0504N-MM4	WMP20S	10	●	029	8340687	20,58
WL17-VC0504N-MM4	WSM10S	10	●	029	8340688	20,58
WL17-VC0504N-MM4	WSM20S	10	●	029	8340681	20,58
WL17-VC0504N-MP4	WPP20G	10	●	029	8340682	21,20
WL17-VC0504R-FM4	WSM10S	10	●	029	8341214	20,58
WL17-VC0504R-FM4	WSM20S	10	●	029	8341215	20,58
WL17-VC0508L-FM4	WSM10S	10	●	029	8341211	20,58
WL17-VC0508L-FM4	WSM20S	10	●	029	8341212	20,58
WL17-VC0508N-FM4	WSM10S	10	●	029	8341206	20,58

Bezeichnung / Designation	Sorte / Grade	VE / US		Disc. Gr.	Article No.	EURO Stück / piece
WL17-VC0508N-FM4	WSM20S	10	●	029	8341207	20,58
WL17-VC0508N-FP4	WPP20G	10	●	029	8341218	21,20
WL17-VC0508N-MM4	WMP20S	10	●	029	8340689	20,58
WL17-VC0508N-MM4	WSM10S	10	●	029	8341200	20,58
WL17-VC0508N-MM4	WSM20S	10	●	029	8341201	20,58
WL17-VC0508N-MP4	WPP20G	10	●	029	8341202	21,20
WL17-VC0508R-FM4	WSM10S	10	●	029	8341216	20,58
WL17-VC0508R-FM4	WSM20S	10	●	029	8341217	20,58
WL25-RC0420N-MU6	WPP20G	10	●	029	8204862	23,10
WL25-RC0420N-MU6	WPP20S	10	●	029	7960268[3]	24,37
WL25-RC0420N-MU6	WSM20S	10	●	029	7960266	23,67
WL25-RC0420N-MU6	WSM30S	10	●	029	7960267	23,67
WL25-RC0420NTM-3	WBH20C	2	●	023	8306544	150,00
WL25-RC0525N-MU6	WPP20G	10	●	029	8204863	23,10
WL25-RC0525N-MU6	WSM20S	10	●	029	8012567	23,67
WL25-RC0525N-MU6	WSM30S	10	●	029	8012568	23,67
WL25-RC0525NTM-3	WBH20C	2	●	023	8306545	150,00
WL25-VC0702L-FM4	WSM10S	10	●	029	8320850	23,67
WL25-VC0702L-FM4	WSM20S	10	●	029	8320851	23,67
WL25-VC0702N-FM4	WSM01	10	●	029	8460949	23,10
WL25-VC0702N-FM4	WSM10S	10	●	029	8138252	23,67
WL25-VC0702N-FM4	WSM20S	10	●	029	8138253	23,67
WL25-VC0702R-FM4	WSM10S	10	●	029	8320248	23,67
WL25-VC0702R-FM4	WSM20S	10	●	029	8320249	23,67
WL25-VC0704L-FM4	WSM10S	10	●	029	8012535	23,67
WL25-VC0704L-FM4	WSM20S	10	●	029	8012536	23,67
WL25-VC0704L-FP4	WKP01G	10	●	029	8422905	23,10
WL25-VC0704L-FP4	WPP10G	10	●	029	8204865	23,10
WL25-VC0704L-FP4	WPP20G	10	●	029	8204864	23,10
WL25-VC0704L-MM4	WMP20S	10	●	029	7960247	23,67
WL25-VC0704L-MM4	WSM20S	10	●	029	7960231	23,67
WL25-VC0704L-MP4	WPP10G	10	●	029	8204866	23,10
WL25-VC0704L-MP4	WPP20G	10	●	029	8201088	23,10
WL25-VC0704L-MP4	WPP20S	10	●	029	7960258[3]	24,37
WL25-VC0704LTM-3	WBH20C	2	●	023	8306540	150,00
WL25-VC0704N-FM4	WSM01	10	●	029	8461470	23,10
WL25-VC0704N-FM4	WSM10S	10	●	029	8012496	23,67
WL25-VC0704N-FM4	WSM20S	10	●	029	8012532	23,67
WL25-VC0704N-FP4	WKP01G	10	●	029	8422906	23,10
WL25-VC0704N-FP4	WPP10G	10	●	029	8204867	23,10
WL25-VC0704N-FP4	WPP20G	10	●	029	8204868	23,10
WL25-VC0704N-MM4	WMP20S	10	●	029	7960243	23,67
WL25-VC0704N-MM4	WSM01	10	●	029	8461471	23,10
WL25-VC0704N-MM4	WSM10S	10	●	029	8012495	23,67
WL25-VC0704N-MM4	WSM20S	10	●	029	7960244	23,67
WL25-VC0704N-MP4	WPP10G	10	●	029	8204869	23,10
WL25-VC0704N-MP4	WPP20G	10	●	029	8201089	23,10
WL25-VC0704N-MP4	WPP20S	10	●	029	7960255[3]	24,37
WL25-VC0704NTM-3	WBH20C	2	●	023	8306538	150,00
WL25-VC0704R-FM4	WSM10S	10	●	029	8012539	23,67
WL25-VC0704R-FM4	WSM20S	10	●	029	8012540	23,67
WL25-VC0704R-FP4	WKP01G	10	●	029	8422907	23,10
WL25-VC0704R-FP4	WPP10G	10	●	029	8204900	23,10
WL25-VC0704R-FP4	WPP20G	10	●	029	8204901	23,10
WL25-VC0704R-MM4	WMP20S	10	●	029	7960250	23,67
WL25-VC0704R-MM4	WSM20S	10	●	029	7960251	23,67
WL25-VC0704R-MP4	WPP10G	10	●	029	8204903	23,10
WL25-VC0704R-MP4	WPP20G	10	●	029	8204902	23,10
WL25-VC0704R-MP4	WPP20S	10	●	029	7960262[3]	24,37
WL25-VC0704RTM-3	WBH20C	2	●	023	8306539	150,00
WL25-VC0708L-FM4	WSM10S	10	●	029	8012537	23,67
WL25-VC0708L-FM4	WSM20S	10	●	029	8012538	23,67
WL25-VC0708L-FP4	WKP01G	10	●	029	8422908	23,10
WL25-VC0708L-FP4	WPP10G	10	●	029	8204904	23,10
WL25-VC0708L-FP4	WPP20G	10	●	029	8204905	23,10
WL25-VC0708L-MM4	WMP20S	10	●	029	7960248	23,67
WL25-VC0708L-MM4	WSM20S	10	●	029	7960249	23,67
WL25-VC0708L-MP4	WPP10G	10	●	029	8204906	23,10
WL25-VC0708L-MP4	WPP10S	10	●	029	7960259[3]	24,37
WL25-VC0708L-MP4	WPP20G	10	●	029	8204907	23,10

Bezeichnung / Designation	Sorte / Grade	VE / US		Disc. Gr.	Article No.	EURO Stück / piece
WL25-VC0708LTM-3	WBH20C	2	●	023	8306543	150,00
WL25-VC0708N-FM4	WSM10S	10	●	029	8012533	23,67
WL25-VC0708N-FM4	WSM20S	10	●	029	8012534	23,67
WL25-VC0708N-FP4	WKP01G	10	●	029	8422909	23,10
WL25-VC0708N-FP4	WPP10G	10	●	029	8204908	23,10
WL25-VC0708N-FP4	WPP20G	10	●	029	8204909	23,10
WL25-VC0708N-MM4	WMP20S	10	●	029	7960245	23,67
WL25-VC0708N-MM4	WSM01	10	●	029	8461472	23,10
WL25-VC0708N-MM4	WSM10S	10	●	029	8012513	23,67
WL25-VC0708N-MM4	WSM20S	10	●	029	7960246	23,67
WL25-VC0708N-MP4	WPP10G	10	●	029	8204911	23,10
WL25-VC0708N-MP4	WPP10S	10	●	029	7960256[1]	24,37
WL25-VC0708N-MP4	WPP20G	10	●	029	8204910	23,10
WL25-VC0708N-MP4	WPP20S	10	●	029	7960232[1]	24,37
WL25-VC0708NTM-3	WBH20C	2	●	023	8306541	150,00
WL25-VC0708R-FM4	WSM10S	10	●	029	8012541	23,67
WL25-VC0708R-FM4	WSM20S	10	●	029	8012542	23,67
WL25-VC0708R-FP4	WKP01G	10	●	029	8422910	23,10
WL25-VC0708R-FP4	WPP10G	10	●	029	8204912	23,10
WL25-VC0708R-FP4	WPP20G	10	●	029	8204913	23,10
WL25-VC0708R-MM4	WMP20S	10	●	029	7960252	23,67
WL25-VC0708R-MM4	WSM20S	10	●	029	7960253	23,67
WL25-VC0708R-MP4	WPP10G	10	●	029	8204914	23,10
WL25-VC0708R-MP4	WPP10S	10	●	029	7960263[1]	24,37
WL25-VC0708R-MP4	WPP20G	10	●	029	8201090	23,10
WL25-VC0708R-MP4	WPP20S	10	●	029	7960264[1]	24,37
WL25-VC0708RTM-3	WBH20C	2	●	023	8306542	150,00
WL25-VC0712N-MM4	WSM10S	10	●	029	8012514	23,67
WL25-VC0712N-MM4	WSM20S	10	●	029	8012515	23,67
WL25-VC0712N-MP4	WPP10G	10	●	029	8204915	23,10
WL25-VC0712N-MP4	WPP10S	10	●	029	8012516[1]	24,37
WL25-VC0712N-MP4	WPP20G	10	●	029	8204916	23,10
WL25-VC0716N-MM4	WSM10S	10	●	029	8012518	23,67
WL25-VC0716N-MM4	WSM20S	10	●	029	8012519	23,67
WL25-VC0716N-MP4	WPP10G	10	●	029	8204917	23,10
WL25-VC0716N-MP4	WPP20G	10	●	029	8204918	23,10
WNGA080404SM-MWS	WCH10C	10	●	024	8064426	23,83
WNGA080404SM-S	WCH10C	10	●	024	8064425	21,67
WNGA080408SM-MWS	WCH10C	10	●	024	8064428	23,83
WNGA080408SM-S	WCH10C	10	●	024	8064427	21,67
WNGA080408T02020	WCK10	10	●	024	7349640	30,30
WNGA080408TM-3	WBH10	2	●	023	7636847	102,00
WNGA080408TM-3	WBH20	2	●	023	7636848	102,00
WNGA080408TM-3	WBH30	2	●	023	8060977	102,00
WNGA080408TS-3	WBK20	2	●	023	7823857	102,00
WNGA080412T02020	WCK10	10	●	024	7349641	30,30
WNGG080404M-MN3	WN10	10	●	028	7749799	17,51
WNGG080404M-MN3	WNN10	10	●	028	7778096	24,54
WNGG080408M-MN3	WN10	10	●	028	7749893	17,51
WNGG080408M-MN3	WNN10	10	●	028	7778120	24,54
WNMA060404-RK5	WKK10S	10	●	027	6411816	12,38
WNMA060404-RK5	WKK20S	10	■	027	6406944[2]	12,38
WNMA060408-RK5	WKK10S	10	●	027	6411904	12,38
WNMA060408-RK5	WKK20S	10	●	027	6407311	12,38
WNMA060412-RK5	WKK10S	10	●	027	6411907	12,38
WNMA060412-RK5	WKK20S	10	●	027	6407314	12,38
WNMA080404-RK5	WKK10S	10	●	027	6411981	15,56
WNMA080404-RK5	WKK20S	10	●	027	6393173	15,56
WNMA080408-RK5	WKK10S	10	●	027	6411983	15,56
WNMA080408-RK5	WKK20S	10	●	027	6393077	15,56
WNMA080408-RK7	WKK10S	10	●	027	6431865	15,56
WNMA080408-RK7	WKK20S	10	●	027	6419538	15,56
WNMA080412-RK5	WKK10S	10	●	027	6411986	15,56
WNMA080412-RK5	WKK20S	10	●	027	6393203	15,56
WNMA080412-RK7	WKK10S	10	●	027	6431866	15,56
WNMA080412-RK7	WKK20S	10	●	027	6419907	15,56
WNMA100612-RK5	WKK10S	10	●	027	6411988	24,76
WNMA100612-RK5	WKK20S	10	●	027	6397856	24,76
WNMA100616-RK5	WKK20S	10	●	027	6398389	24,76
WNMG060404-FM5	WSM01	10	●	027	8461484	12,75

Bezeichnung / Designation	Sorte / Grade	VE / US		Disc. Gr.	Article No.	EURO Stück / piece
WNMG060404-FM5	WSM10S	10	●	027	7091936	12,38
WNMG060404-FM5	WSM20S	10	●	027	7091937	12,38
WNMG060404-FP5	WPP10G	10	●	027	8115855	12,75
WNMG060404-FP5	WPP20G	10	●	027	8115856	12,75
WNMG060404-FW5	WKP01G	10	●	027	8422914	14,63
WNMG060404-FW5	WPP10G	10	●	027	8115863	14,63
WNMG060404-FW5	WPP10S	10	■	027	7933358[2]	14,63
WNMG060404-FW5	WPP20G	10	●	027	8115864	14,63
WNMG060404-FW5	WSM10S	10	●	027	7933361	14,21
WNMG060404-FW5	WSM20S	10	●	027	7933360	14,21
WNMG060404-MK5	WKK10S	10	●	027	6353510	12,38
WNMG060404-MK5	WKK20S	10	●	027	6123764	12,38
WNMG060404-MM5	WMP20S	10	●	027	7376613	12,38
WNMG060404-MM5	WSM10S	10	●	027	7251980	12,38
WNMG060404-MM5	WSM20S	10	●	027	7251981	12,38
WNMG060404-MM5	WSM30S	10	●	027	7251982	12,38
WNMG060404-MP3	WPP10G	10	●	027	8115873	12,75
WNMG060404-MP3	WPP20G	10	●	027	8115874	12,75
WNMG060404-MP5	WPP10G	10	●	027	8115886	12,75
WNMG060404-MP5	WPP20G	10	●	027	8115887	12,75
WNMG060404-MP5	WPP30G	10	●	027	8115888	12,75
WNMG060404-NF	WPP01	10	■	027	5263261[2]	14,63
WNMG060408-FM5	WSM10S	10	●	027	7091938	12,38
WNMG060408-FM5	WSM20S	10	●	027	7091939	12,38
WNMG060408-FP5	WKP01G	10	●	027	8422911	12,75
WNMG060408-FP5	WPP10G	10	●	027	8115857	12,75
WNMG060408-FP5	WPP10S	10	■	027	6057799[2]	12,75
WNMG060408-FP5	WPP20G	10	●	027	8115858	12,75
WNMG060408-FW5	WPP10G	10	●	027	8115865	14,63
WNMG060408-FW5	WPP20G	10	●	027	8115866	14,63
WNMG060408-FW5	WSM10S	10	●	027	7933365	14,21
WNMG060408-FW5	WSM20S	10	●	027	7933364	14,21
WNMG060408-MK5	WKK10S	10	●	027	6353512	12,38
WNMG060408-MK5	WKK20S	10	●	027	6123761	12,38
WNMG060408-MM5	WMP20S	10	●	027	7376614	12,38
WNMG060408-MM5	WSM10S	10	●	027	7251983	12,38
WNMG060408-MM5	WSM20S	10	●	027	7251984	12,38
WNMG060408-MM5	WSM30S	10	●	027	7251985	12,38
WNMG060408-MP3	WPP10G	10	●	027	8115875	12,75
WNMG060408-MP3	WPP20G	10	●	027	8115876	12,75
WNMG060408-MP5	WPP05G	10	●	027	8411485	12,75
WNMG060408-MP5	WPP05S	10	■	027	6613521[2]	12,75
WNMG060408-MP5	WPP10G	10	●	027	8115889	12,75
WNMG060408-MP5	WPP20G	10	●	027	8115890	12,75
WNMG060408-MP5	WPP20S	10	■	027	6265517[2]	12,75
WNMG060408-MP5	WPP30G	10	●	027	8115891	12,75
WNMG060408-MU5	WMP20S	10	●	027	7895069	12,38
WNMG060408-MU5	WPP10G	10	●	027	8115910	12,75
WNMG060408-MU5	WPP20G	10	●	027	8115911	12,75
WNMG060408-MU5	WSM20S	10	●	027	7895070	12,38
WNMG060408-MW5	WKK10S	10	●	027	7941541	14,21
WNMG060408-MW5	WPP10G	10	●	027	8115919	14,63
WNMG060408-MW5	WPP20G	10	●	027	8115920	14,63
WNMG060408-NM4	WSM20	10	●	027	5585364	12,38
WNMG060408-NMS	WSM10S	10	●	027	7053865	12,38
WNMG060408-NMS	WSM20S	10	●	027	7053866	12,38
WNMG060408-RM5	WMP20S	10	●	027	6944730	12,38
WNMG060408-RM5	WSM20S	10	●	027	6944754	12,38
WNMG060408-RM5	WSM30S	10	●	027	6944755	12,38
WNMG060408-RP5	WPP10G	10	●	027	8115931	12,75
WNMG060408-RP5	WPP20G	10	●	027	8115932	12,75
WNMG060408-RP5	WPP30G	10	●	027	8115933	12,75
WNMG060412-MK5	WKK10S	10	●	027	6353514	12,38
WNMG060412-MK5	WKK20S	10	●	027	6123624	12,38
WNMG060412-MM5	WSM20S	10	●	027	7251986	12,38
WNMG060412-MM5	WSM30S	10	●	027	7251987	12,38
WNMG060412-MP3	WPP20G	10	●	027	8115877	12,75
WNMG060412-MP5	WPP10G	10	●	027	8115892	12,75
WNMG060412-MP5	WPP20G	10	●	027	8115893	12,75
WNMG060412-MW5	WKK10S	10	●	027	7941544	14,21

Bezeichnung / Designation	Sorte / Grade	VE / US		Disc. Gr.	Article No.	EURO Stück / piece
WNMG060412-MW5	WPP10G	10	●	027	8115921	14,63
WNMG060412-MW5	WPP20G	10	●	027	8115922	14,63
WNMG060412-RP5	WPP10G	10	●	027	8115934	12,75
WNMG060412-RP5	WPP20G	10	●	027	8115935	12,75
WNMG060412-RP5	WPP30G	10	●	027	8115936	12,75
WNMG080404-FM5	WMP20S	10	●	027	7091940	15,56
WNMG080404-FM5	WSM01	10	●	027	8461485	16,02
WNMG080404-FM5	WSM10S	10	●	027	7091941	15,56
WNMG080404-FM5	WSM20S	10	●	027	7091942	15,56
WNMG080404-FP5	WEP10C	10	●	027	8136996	14,00
WNMG080404-FP5	WKP01G	10	●	027	8422912	16,03
WNMG080404-FP5	WPP10G	10	●	027	8115555	16,03
WNMG080404-FP5	WPP20G	10	●	027	8115556	16,03
WNMG080404-FW5	WKP01G	10	●	027	8422915	18,38
WNMG080404-FW5	WPP10G	10	●	027	8115867	18,38
WNMG080404-FW5	WPP20G	10	●	027	8115868	18,38
WNMG080404-FW5	WSM10S	10	●	027	7933368	17,83
WNMG080404-FW5	WSM20S	10	●	027	7933369	17,83
WNMG080404-MK5	WKK10S	10	●	027	6353326	15,56
WNMG080404-MK5	WKK20S	10	●	027	6121128	15,56
WNMG080404-MM5	WMP20S	10	●	027	7376615	15,56
WNMG080404-MM5	WSM10S	10	●	027	7251988	15,56
WNMG080404-MM5	WSM20S	10	●	027	7251989	15,56
WNMG080404-MM5	WSM30S	10	●	027	7251990	15,56
WNMG080404-MP3	WPP20G	10	●	027	8115878	16,03
WNMG080404-MP3	WPP30G	10	●	027	8115879	16,03
WNMG080404-MP5	WPP10G	10	●	027	8115894	16,03
WNMG080404-MP5	WPP10S	10	■	027	6170614[1]	16,03
WNMG080404-MP5	WPP20G	10	●	027	8115895	16,03
WNMG080404-MP5	WPP20S	10	■	027	6180561[1]	16,03
WNMG080404-MP5	WPP30G	10	●	027	8115896	16,03
WNMG080404-MS3	WSM01	10	●	027	6890841	16,03
WNMG080404-MS3	WSM10S	10	●	027	7469068	15,56
WNMG080404-MU5	WMP20S	10	●	027	7895073	15,56
WNMG080404-MU5	WPP10G	10	●	027	8115912	16,03
WNMG080404-MU5	WPP20G	10	●	027	8115913	16,03
WNMG080404-MU5	WSM20S	10	●	027	7895074	15,56
WNMG080404-NM4	WSM30	10	●	027	5357523	15,56
WNMG080404-NMS	WSM01	10	●	027	6876679	16,03
WNMG080404-NMS	WSM10S	10	●	027	7053867	15,56
WNMG080404-NMS	WSM20S	10	●	027	7053868	15,56
WNMG080404-NMS	WSM30S	10	●	027	7053869	15,56
WNMG080408-FM5	WMP20S	10	●	027	7091943	15,56
WNMG080408-FM5	WSM01	10	●	027	8461486	16,02
WNMG080408-FM5	WSM10S	10	●	027	7091944	15,56
WNMG080408-FM5	WSM20S	10	●	027	7091945	15,56
WNMG080408-FP5	WEP10C	10	●	027	8136997	14,00
WNMG080408-FP5	WKP01G	10	●	027	8422913	16,03
WNMG080408-FP5	WPP10G	10	●	027	8115859	16,03
WNMG080408-FP5	WPP10S	10	■	027	6060096[1]	16,03
WNMG080408-FP5	WPP20G	10	●	027	8115860	16,03
WNMG080408-FW5	WKP01G	10	●	027	8422916	18,38
WNMG080408-FW5	WPP10G	10	●	027	8115869	18,38
WNMG080408-FW5	WPP20G	10	●	027	8115870	18,38
WNMG080408-FW5	WSM10S	10	●	027	7933372	17,83
WNMG080408-FW5	WSM20S	10	●	027	7933373	17,83
WNMG080408-MK5	WKK10S	10	●	027	6353360	15,56
WNMG080408-MK5	WKK20S	10	●	027	6070388	15,56
WNMG080408-MM5	WMP20S	10	●	027	7376616	15,56
WNMG080408-MM5	WSM10S	10	●	027	7251991	15,56
WNMG080408-MM5	WSM20S	10	●	027	7251992	15,56
WNMG080408-MM5	WSM30S	10	●	027	7251993	15,56
WNMG080408-MP3	WPP05G	10	●	027	8411483	16,03
WNMG080408-MP3	WPP05S	10	■	027	6613456[1]	16,03
WNMG080408-MP3	WPP10G	10	●	027	8115880	16,03
WNMG080408-MP3	WPP20G	10	●	027	8115881	16,03
WNMG080408-MP3	WPP20S	10	■	027	6064958[1]	16,03
WNMG080408-MP3	WPP30G	10	●	027	8115882	16,03
WNMG080408-MP5	WPP05G	10	●	027	8411486	16,03
WNMG080408-MP5	WPP05S	10	■	027	6613523[1]	16,03

Bezeichnung / Designation	Sorte / Grade	VE / US		Disc. Gr.	Article No.	EURO Stück / piece
WNMG080408-MP5	WPP10G	10	●	027	8115897	16,03
WNMG080408-MP5	WPP10S	10	●	027	6059951[2]	16,03
WNMG080408-MP5	WPP20G	10	●	027	8115898	16,03
WNMG080408-MP5	WPP20S	10	●	027	6059952[2]	16,03
WNMG080408-MP5	WPP30G	10	●	027	8115899	16,03
WNMG080408-MP5	WPP30S	10	●	027	6059953[2]	16,03
WNMG080408-MS3	WMP20S	10	●	027	7903826	15,56
WNMG080408-MS3	WPP20G	10	●	027	8115909	16,03
WNMG080408-MS3	WSM01	10	●	027	6890880	16,03
WNMG080408-MS3	WSM10S	10	●	027	6890842	15,56
WNMG080408-MS3	WSM30S	10	●	027	7469070	15,56
WNMG080408-MU5	WMP20S	10	●	027	7560062	15,56
WNMG080408-MU5	WPP05G	10	●	027	8411488	16,03
WNMG080408-MU5	WPP10G	10	●	027	8115914	16,03
WNMG080408-MU5	WPP20G	10	●	027	8115915	16,03
WNMG080408-MU5	WPP20S	10	■	027	7560061[1]	16,03
WNMG080408-MU5	WSM20S	10	●	027	7560063	15,56
WNMG080408-MW5	WKK10S	10	●	027	7941547	17,83
WNMG080408-MW5	WKK20S	10	●	027	7941548	17,83
WNMG080408-MW5	WMP20S	10	●	027	7941552	17,83
WNMG080408-MW5	WPP05G	10	●	027	8411491	18,38
WNMG080408-MW5	WPP05S	10	■	027	7941549[1]	18,38
WNMG080408-MW5	WPP10G	10	●	027	8115924	18,38
WNMG080408-MW5	WPP20G	10	●	027	8115925	18,38
WNMG080408-NM4	WAM20	10	●	027	5016442	15,97
WNMG080408-NM4	WPP20	10	■	027	5092472[1]	16,03
WNMG080408-NM4	WPP20G	10	●	027	8369454[1]	16,03
WNMG080408-NM4	WSM20	10	●	027	5585373	15,56
WNMG080408-NM4	WSM30	10	●	027	5357524	15,56
WNMG080408-NMS	WSM01	10	●	027	6876744	16,03
WNMG080408-NMS	WSM10S	10	●	027	7053870	15,56
WNMG080408-NMS	WSM20S	10	●	027	7053871	15,56
WNMG080408-NMS	WSM30S	10	●	027	7053872	15,56
WNMG080408-NMT	WS10	10	●	027	5939174	11,86
WNMG080408-NMT	WSM20S	10	●	027	7054014	15,56
WNMG080408-NR4	WSM30	10	●	027	5354529	15,56
WNMG080408-NRS	WMP20S	10	●	027	7469081	15,56
WNMG080408-NRS	WSM01	10	●	027	7469074	16,03
WNMG080408-NRS	WSM10S	10	●	027	7053935	15,56
WNMG080408-NRS	WSM20S	10	●	027	7053936	15,56
WNMG080408-NRS	WSM30S	10	●	027	7268654	15,56
WNMG080408-RM5	WMP20S	10	●	027	6944731	15,56
WNMG080408-RM5	WPP10G	10	●	027	8115929	16,03
WNMG080408-RM5	WPP20G	10	●	027	8115930	16,03
WNMG080408-RM5	WSM10S	10	●	027	6944756	15,56
WNMG080408-RM5	WSM20S	10	●	027	6944757	15,56
WNMG080408-RM5	WSM30S	10	●	027	6944758	15,56
WNMG080408-RP5	WKK10S	10	●	027	6568391	15,56
WNMG080408-RP5	WKK20S	10	●	027	6342045	15,56
WNMG080408-RP5	WPP05G	10	●	027	8411493	16,03
WNMG080408-RP5	WPP05S	10	■	027	6613546[1]	16,03
WNMG080408-RP5	WPP10G	10	●	027	8115584	16,03
WNMG080408-RP5	WPP10S	10	■	027	6059593[1]	16,03
WNMG080408-RP5	WPP20G	10	●	027	8115585	16,03
WNMG080408-RP5	WPP20S	10	■	027	6059594[1]	16,03
WNMG080408-RP5	WPP30G	10	●	027	8115586	16,03
WNMG080408-RP5	WPP30S	10	■	027	6059596[1]	16,03
WNMG080408-RP7	WKP30S	10	●	027	7156982	15,56
WNMG080408-RP7	WPP10G	10	●	027	8115946	16,03
WNMG080408-RP7	WPP20G	10	●	027	8115947	16,03
WNMG080408-RP7	WPP20S	10	■	027	6815859[1]	16,03
WNMG080408-RP7	WPP30G	10	●	027	8115948	16,03
WNMG080412-FM5	WSM10S	10	●	027	7091946	15,56
WNMG080412-FP5	WPP10G	10	●	027	8115861	16,03
WNMG080412-FP5	WPP20G	10	●	027	8115862	16,03
WNMG080412-FW5	WKP01G	10	●	027	8422917	18,38
WNMG080412-FW5	WPP10G	10	●	027	8115871	18,38
WNMG080412-FW5	WPP20G	10	●	027	8115872	18,38
WNMG080412-MK5	WKK10S	10	●	027	6353361	15,56
WNMG080412-MK5	WKK20S	10	●	027	6121229	15,56

Bezeichnung / Designation	Sorte / Grade	VE / US		Disc. Gr.	Article No.	EURO Stück / piece
WNMG080412-MM5	WMP20S	10	●	027	7376617	15,56
WNMG080412-MM5	WSM10S	10	●	027	7251994	15,56
WNMG080412-MM5	WSM20S	10	●	027	7251995	15,56
WNMG080412-MM5	WSM30S	10	●	027	7251996	15,56
WNMG080412-MP3	WPP05G	10	●	027	8411484	16,03
WNMG080412-MP3	WPP05S	10	●	027	6613457[1]	16,03
WNMG080412-MP3	WPP10G	10	●	027	8115883	16,03
WNMG080412-MP3	WPP20G	10	●	027	8115884	16,03
WNMG080412-MP3	WPP30G	10	●	027	8115885	16,03
WNMG080412-MP3	WPP30S	10	■	027	6065526[1]	16,03
WNMG080412-MP5	WPP05G	10	●	027	8411487	16,03
WNMG080412-MP5	WPP05S	10	■	027	6613524[1]	16,03
WNMG080412-MP5	WPP10G	10	●	027	8115900	16,03
WNMG080412-MP5	WPP10S	10	■	027	6119975[1]	16,03
WNMG080412-MP5	WPP20G	10	●	027	8115901	16,03
WNMG080412-MP5	WPP20S	10	■	027	6119974[1]	16,03
WNMG080412-MP5	WPP30G	10	●	027	8115902	16,03
WNMG080412-MP5	WPP30S	10	■	027	6119976[1]	16,03
WNMG080412-MU5	WMP20S	10	●	027	7560066	15,56
WNMG080412-MU5	WPP05G	10	●	027	8411489	16,03
WNMG080412-MU5	WPP05S	10	■	027	7640089[1]	16,03
WNMG080412-MU5	WPP10G	10	●	027	8115917	16,03
WNMG080412-MU5	WPP20G	10	●	027	8115918	16,03
WNMG080412-MU5	WPP20S	10	■	027	7560065[1]	16,03
WNMG080412-MU5	WSM20S	10	●	027	7560067	15,56
WNMG080412-MW5	WKK10S	10	●	027	7941553	17,83
WNMG080412-MW5	WKK20S	10	●	027	7941554	17,83
WNMG080412-MW5	WMP20S	10	●	027	7941558	17,83
WNMG080412-MW5	WPP05G	10	●	027	8411492	18,38
WNMG080412-MW5	WPP05S	10	■	027	7941555[1]	18,38
WNMG080412-MW5	WPP10G	10	●	027	8115927	18,38
WNMG080412-MW5	WPP10S	10	■	027	7941556[1]	18,38
WNMG080412-MW5	WPP20G	10	●	027	8115928	18,38
WNMG080412-MW5	WPP20S	10	■	027	7941557[1]	18,38
WNMG080412-NM	WSM20S	10	●	027	7054118	17,83
WNMG080412-NRS	WMP20S	10	●	027	7469082	15,56
WNMG080412-NRS	WSM01	10	●	027	7469075	16,03
WNMG080412-NRS	WSM10S	10	●	027	7053937	15,56
WNMG080412-NRS	WSM20S	10	●	027	7053938	15,56
WNMG080412-NRS	WSM30S	10	●	027	7268655	15,56
WNMG080412-RM5	WMP20S	10	●	027	6944732	15,56
WNMG080412-RM5	WSM10S	10	●	027	6944759	15,56
WNMG080412-RM5	WSM20S	10	●	027	6944760	15,56
WNMG080412-RM5	WSM30S	10	●	027	6944761	15,56
WNMG080412-RP5	WKK10S	10	●	027	6568392	15,56
WNMG080412-RP5	WKK20S	10	●	027	6318166	15,56
WNMG080412-RP5	WPP05G	10	●	027	8411494	16,03
WNMG080412-RP5	WPP05S	10	■	027	6613547[1]	16,03
WNMG080412-RP5	WPP10G	10	●	027	8115587	16,03
WNMG080412-RP5	WPP10S	10	■	027	6059612[1]	16,03
WNMG080412-RP5	WPP20G	10	●	027	8115588	16,03
WNMG080412-RP5	WPP20S	10	■	027	6059613[1]	16,03
WNMG080412-RP5	WPP30G	10	●	027	8115589	16,03
WNMG080412-RP5	WPP30S	10	■	027	6059614[1]	16,03
WNMG080412-RP7	WKP30S	10	●	027	7156983	15,56
WNMG080412-RP7	WPP10G	10	●	027	8115949	16,03
WNMG080412-RP7	WPP20G	10	●	027	8115950	16,03
WNMG080412-RP7	WPP30G	10	●	027	8115951	16,03
WNMG080416-MK5	WKK10S	10	●	027	6362012	15,56
WNMG080416-MK5	WKK20S	10	●	027	6130308	15,56
WNMG080416-MM5	WSM20S	10	●	027	7251997	15,56
WNMG080416-MM5	WSM30S	10	●	027	7251998	15,56
WNMG080416-MP5	WPP10G	10	●	027	8115903	16,03
WNMG080416-MP5	WPP20G	10	●	027	8115904	16,03
WNMG080416-MU5	WPP05G	10	●	027	8411490	16,03
WNMG080416-MU5	WPP10G	10	●	027	8259880	16,03
WNMG080416-MU5	WPP20G	10	●	027	8259881	16,03
WNMG080416-RP5	WPP05G	10	●	027	8411495	16,03
WNMG080416-RP5	WPP10G	10	●	027	8115937	16,03
WNMG080416-RP5	WPP10S	10	■	027	6113822[1]	16,03

Bezeichnung / Designation	Sorte / Grade	VE / US		Disc. Gr.	Article No.	EURO Stück / piece
WNMG080416-RP5	WPP20G	10	●	027	8115938	16,03
WNMG080416-RP5	WPP30G	10	●	027	8115939	16,03
WNMG100608-MK5	WKK10S	10	●	027	6362266	24,76
WNMG100608-MK5	WKK20S	10	●	027	6153397	24,76
WNMG100608-MM5	WSM20S	10	●	027	7251999	24,76
WNMG100608-MM5	WSM30S	10	●	027	7252000	24,76
WNMG100608-MP5	WPP10G	10	●	027	8115905	25,50
WNMG100608-MP5	WPP20G	10	●	027	8115906	25,50
WNMG100608-RP7	WPP20G	10	●	027	8115952	25,50
WNMG100612-MK5	WKK10S	10	●	027	6362276	24,76
WNMG100612-MK5	WKK20S	10	●	027	6154418	24,76
WNMG100612-MM5	WSM20S	10	●	027	7252001	24,76
WNMG100612-MM5	WSM30S	10	●	027	7252002	24,76
WNMG100612-MP5	WPP10G	10	●	027	8115907	25,50
WNMG100612-MP5	WPP20G	10	●	027	8115908	25,50
WNMG100612-RP5	WPP10G	10	●	027	8115940	25,50
WNMG100612-RP5	WPP20G	10	●	027	8115941	25,50
WNMG100612-RP5	WPP20S	10	●	027	6195530[2]	25,50
WNMG100612-RP5	WPP30G	10	●	027	8115942	25,50
WNMG100612-RP7	WPP10G	10	●	027	8115953	25,50
WNMG100612-RP7	WPP20G	10	●	027	8115954	25,50
WNMG100612-RP7	WPP30G	10	●	027	8115955	25,50
WNMG100616-MK5	WKK10S	10	●	027	6362291	24,76
WNMG100616-MK5	WKK20S	10	●	027	6154518	24,76
WNMG100616-RP5	WPP10G	10	●	027	8115943	25,50
WNMG100616-RP5	WPP10S	10	■	027	6149640[1]	25,50
WNMG100616-RP5	WPP20G	10	●	027	8115944	25,50
WNMG100616-RP5	WPP30G	10	●	027	8115945	25,50
WNMG100616-RP7	WPP20G	10	●	027	8115956	25,50
WNMG100616-RP7	WPP30G	10	●	027	8115957	25,50
WNMM080412-HU3	WPP20G	10	●	027	8138404	16,02
WNMM100612-HU3	WPP10G	10	●	027	8138406	25,50
WNMM100612-HU3	WPP20G	10	●	027	8138405	25,50
WNMM100616-HU3	WPP10G	10	●	027	8138407	25,50
WNMM100616-HU3	WPP20G	10	●	027	8138408	25,50
WOEX030204-E57	WKP35S	10	●	017	6371222	13,30
WOEX030204-E57	WSP45G	10	●	017	7969172	13,97
WOEX040304-E57	WKP25S	10	●	017	6371224	14,09
WOEX040304-E57	WKP35S	10	●	017	6371225	14,09
WOEX040304-E57	WSP45G	10	●	017	7969173	14,81
WOEX05T304-E57	WKP25S	10	●	017	6371229	14,23
WOEX05T304-E57	WKP35S	10	●	017	6371250	14,23
WOEX05T304-E57	WSP45G	10	●	017	7969174	14,95
WOEX06T304-E57	WAK15	10	●	017	5033077	16,10
WOEX06T304-E57	WKP25S	10	●	017	6381688	16,10
WOEX06T304-E57	WKP35S	10	●	017	6381690	16,10
WOEX06T304-E57	WSP45G	10	●	017	7969175	16,91
WOEX080408-E57	WKP25S	10	●	017	6381695	20,39
WOEX080408-E57	WKP35S	10	●	017	6381694	20,39
WOEX080408-E57	WSP45G	10	●	017	7969176	21,41
WOEX100508-E57	WKP35S	10	●	017	6381711	28,00
WOEX100508-E57	WSP45G	10	●	017	7969177	29,40
WOEX120608-E57	WKP35S	10	●	017	6381793	32,40
WOEX120608-E57	WSP45G	10	●	017	7969178	34,10
WOMX030204-B57	WKP35S	10	●	017	6381794	11,09
WOMX030204-B57	WSP45G	10	●	017	7969179	11,64
WOMX030204-D57	WKP35S	10	●	017	6381799	11,09
WOMX030204-D57	WSP45G	10	●	017	7969196	11,64
WOMX030204-D57	WXP40	10	●	017	5033094	10,37
WOMX040304-B57	WKP35S	10	●	017	6381835	11,67
WOMX040304-B57	WSP45G	10	●	017	7969190	12,26
WOMX040304-D57	WKP35S	10	●	017	6381840	11,67
WOMX040304-D57	WSP45G	10	●	017	7969197	12,26
WOMX040304-D57	WXP40	10	●	017	5033097	10,90
WOMX05T304-B57	WKP35S	10	●	017	6381911	11,80
WOMX05T304-B57	WSP45G	10	●	017	7969191	12,38
WOMX05T304-D57	WAK15	10	●	017	5033098	11,80
WOMX05T304-D57	WKP35S	10	●	017	6381913	11,80
WOMX05T304-D57	WSP45G	10	●	017	7969198	12,38
WOMX05T304-D57	WXP40	10	●	017	5033100	11,04

Bezeichnung / Designation	Sorte / Grade	VE / US		Disc. Gr.	Article No.	EURO Stück / piece
WOMX06T304-B57	WKP35S	10	●	017	6381915	13,38
WOMX06T304-B57	WSP45G	10	●	017	7969192	14,05
WOMX06T304-D57	WAK15	10	●	017	5033101	13,38
WOMX06T304-D57	WKP25S	10	●	017	6371158	13,38
WOMX06T304-D57	WKP35S	10	●	017	6371221	13,38
WOMX06T304-D57	WSP45G	10	●	017	7969199	14,05
WOMX06T304-D57	WXP40	10	●	017	5033103	12,36
WOMX080408-B57	WKP35S	10	●	017	6381930	17,01
WOMX080408-B57	WSP45G	10	●	017	7969193	17,86
WOMX080408-D57	WAK15	10	●	017	5033104	17,01
WOMX080408-D57	WKP25S	10	●	017	6381937	17,01
WOMX080408-D57	WKP35S	10	●	017	6381935	17,01
WOMX080408-D57	WSP45G	10	●	017	7969200	17,86
WOMX080408-D57	WXP40	10	●	017	5033106	15,80
WOMX100508-B57	WKP35S	10	●	017	6381938	23,26
WOMX100508-B57	WSP45G	10	●	017	7969194	24,41
WOMX100508-D57	WAK15	10	●	017	5033107	23,26
WOMX100508-D57	WKP25S	10	●	017	6381943	23,26
WOMX100508-D57	WKP35S	10	●	017	6381942	23,26
WOMX100508-D57	WSP45G	10	●	017	7969201	24,41
WOMX100508-D57	WXP40	10	●	017	5033109	21,63
WOMX120608-B57	WKP35S	10	●	017	6381946	27,00
WOMX120608-B57	WSP45G	10	●	017	7969195	28,40
WOMX120608-D57	WAK15	10	●	017	5033110	27,00
WOMX120608-D57	WKP25S	10	●	017	6381961	27,00
WOMX120608-D57	WKP35S	10	●	017	6381960	27,00
WOMX120608-D57	WSP45G	10	●	017	7969202	28,40
WOMX120608-D57	WXP40	10	●	017	5033112	25,10
XDGT1303079R-D57	WSP45G	10	●	009	8201942	28,10
XDGT1303079R-D57	WSP45S	10	■	009	6370775[1]	28,10
XDGT1303080R-D57	WKP35S	10	●	009	6366023	26,80
XDGT16T3095R-D57	WSP45G	10	●	009	8201943	33,70
XDGT16T3095R-D57	WSP45S	10	■	009	6370777[1]	33,70
XDGT16T3100R-D57	WKP35S	10	●	009	6366025	32,20
XDGT16T3100R-D57	WSP45G	10	●	009	8201944	33,70
XDGT16T3100R-D57	WSP45S	10	■	009	6366026[1]	33,70
XDGT2004125R-D57	WKP35S	10	●	009	6366027	40,20
XDGT2004125R-D57	WSP45G	10	●	009	8201945	42,20
XDGT2004125R-D57	WSP45S	10	■	009	6366092[1]	42,20
XDGT2004127R-D57	WSP45G	10	●	009	8201946	42,20
XDGT2004127R-D57	WSP45S	10	■	009	6370779[1]	42,20
XDGT2405150R-D57	WKP35S	10	●	009	6366095	53,60
XDGT2506160R-D57	WKP35S	10	●	009	6370770	57,60
XDGT2506160R-D57	WSP45G	10	●	009	8201947	60,50
XDGT2506160R-D57	WSP45S	10	■	009	6370771[1]	60,50
XDGT3207191R-D57	WSP45G	5	●	009	8201948	78,70
XDGT3207191R-D57	WSP45S	5	■	009	6370833[1]	78,70
XDGT3207200R-D57	WKP35S	5	●	009	5918478	75,00
XDGT3207200R-D57	WSP45G	5	●	009	8201949	78,70
XDGT3207200R-D57	WSP45S	5	■	009	6370772[1]	78,70
XDGT4009250R-D57	WKP35S	1	●	009	5918479	100,00
XDGT4009250R-D57	WSP45G	1	●	009	8201950	105,00
XDGT4009250R-D57	WSP45S	1	■	009	6370773[1]	105,00
XDGT4009254R-D57	WSP45G	1	●	009	8201951	105,00
XDGT4009254R-D57	WSP45S	1	■	009	6370835[1]	105,00
XDMT1303079R-F55	WSP45G	10	●	009	8201952	19,68
XDMT1303079R-F55	WSP45S	10	■	009	7571379[1]	19,68
XDMT1303080R-F55	WKP25S	10	●	009	6072343	18,76
XDMT1303080R-F55	WKP35G	10	●	009	7347437	22,50
XDMT1303080R-F55	WKP35S	10	●	009	5918699	18,76
XDMT1303080R-F55	WSM35G	10	●	009	8285103	19,70
XDMT1303080R-F55	WSM35S	10	■	009	6952793[1]	19,70
XDMT1303080R-F55	WSP45G	10	●	009	7924355	19,70
XDMT16T3095R-F55	WKP35S	10	●	009	5918770[2]	22,50
XDMT16T3095R-F55	WSP45G	10	●	009	8201953	23,64
XDMT16T3095R-F55	WSP45S	10	■	009	6412449[1]	23,64
XDMT16T3100R-F55	WKP25S	10	●	009	6072347	22,50
XDMT16T3100R-F55	WKP35G	10	●	009	7347439	27,00
XDMT16T3100R-F55	WKP35S	10	●	009	5918771	22,50
XDMT16T3100R-F55	WSM35G	10	●	009	8285104	23,63

Bezeichnung / Designation	Sorte / Grade	VE / US		Disc. Gr.	Article No.	EURO Stück / piece
XDMT16T3100R-F55	WSM35S	10	■	009	7058568[1]	23,63
XDMT16T3100R-F55	WSP45G	10	●	009	7924356	23,64
XDMT2004125R-F55	WKP25S	10	●	009	6072348	27,90
XDMT2004125R-F55	WKP35G	10	●	009	7347440	33,40
XDMT2004125R-F55	WKP35S	10	●	009	5918772	27,90
XDMT2004125R-F55	WSM35G	10	●	009	8285105	29,20
XDMT2004125R-F55	WSM35S	10	■	009	5521042[1]	29,20
XDMT2004125R-F55	WSP45G	10	●	009	7924357	29,20
XDMT2004127R-F55	WKP25S	10	●	009	6072401[2]	27,90
XDMT2004127R-F55	WKP35S	10	●	009	5918773[2]	27,90
XDMT2004127R-F55	WSP45G	10	●	009	8201954	29,20
XDMT2004127R-F55	WSP45S	10	■	009	7571432[1]	29,20
XDMT2405150R-F55	WKP25S	10	●	009	6072402	37,00
XDMT2405150R-F55	WKP35G	10	●	009	7347442	44,50
XDMT2405150R-F55	WKP35S	10	●	009	5918774	37,00
XDMT2405150R-F55	WSM35G	10	●	009	8285106	38,90
XDMT2405150R-F55	WSM35S	10	■	009	5520950[1]	38,90
XDMT2405150R-F55	WSP45G	10	●	009	8201955	38,90
XDMT2405150R-F55	WSP45S	10	■	009	7057793[1]	38,90
XDMT2506159R-F55	WKP35S	10	●	009	5918775[2]	40,20
XDMT2506159R-F55	WSP45G	10	●	009	8201956	42,30
XDMT2506159R-F55	WSP45S	10	■	009	7571434[1]	42,30
XDMT2506160R-F55	WKP25S	10	●	009	6072405	40,20
XDMT2506160R-F55	WKP35G	10	●	009	7347444	48,30
XDMT2506160R-F55	WKP35S	10	●	009	5918794	40,20
XDMT2506160R-F55	WSM35G	10	●	009	8441363	42,30
XDMT2506160R-F55	WSM35S	10	●	009	5518087	42,30
XDMT2506160R-F55	WSP45G	10	●	009	7924358	42,30
XDMT3207191R-F55	WKP35G	5	●	009	7347445[2]	63,30
XDMT3207191R-F55	WKP35S	5	●	009	5943758[2]	52,80
XDMT3207191R-F55	WSP45G	5	●	009	8201957	55,40
XDMT3207191R-F55	WSP45S	5	■	009	7571436[1]	55,40
XDMT3207200R-F55	WKP25S	5	●	009	6072451	52,80
XDMT3207200R-F55	WKP35G	5	●	009	7347446	63,30
XDMT3207200R-F55	WKP35S	5	●	009	5943751	52,80
XDMT3207200R-F55	WSM35G	10	●	009	8441288	55,40
XDMT3207200R-F55	WSM35S	5	●	009	6952803	55,40
XDMT3207200R-F55	WSP45G	5	●	009	8201958	55,40
XDMT3207200R-F55	WSP45S	5	■	009	6952804[1]	55,40
XDMT4009250R-F55	WKP25S	1	●	009	6072452	70,30
XDMT4009250R-F55	WKP35G	1	●	009	7347447	84,40
XDMT4009250R-F55	WKP35S	1	●	009	6952806	70,30
XDMT4009250R-F55	WSP45G	1	●	009	8201959	73,80
XDMT4009254R-F55	WKP35S	1	●	009	5943801[2]	70,30
XDMT4009254R-F55	WSP45G	1	●	009	8201960	73,80
XDMT4009254R-F55	WSP45S	1	■	009	7571438[1]	73,80
XLCFN2603J31-FX		1	●	060	5009609	113,00
XLCFN3203-GX24-2S		1	●	060	5014494	137,00
XLCFN3203M31-FX		1	●	060	5009611	125,00
XLCFN3204-GX24-3S		1	●	060	5014495	137,00
XLCFN3204M41-FX		1	●	060	5009612	125,00
XLCFN3206-GX24-4S		1	●	060	5014496	137,00
XLDEL1010K-GX16-0		1	■	060	6090415[1]	123,00
XLDEL1010K-GX16-1		1	■	060	5329019[1]	123,00
XLDEL1010K-GX16-1C		1	■	060	5531869[1]	123,00
XLDEL1212K-GX16-0		1	●	060	6090500	123,00
XLDEL1212K-GX16-0C		1	■	060	6090502[1]	123,00
XLDEL1212K-GX16-1		1	●	060	5329081	123,00
XLDEL1212K-GX16-1C		1	●	060	5531868	123,00
XLDEL1212K-GX16-2C		1	■	060	5531867[1]	123,00
XLDEL1616K-GX16-1		1	●	060	5329098	129,00
XLDEL1616K-GX16-1C		1	●	060	5531866	129,00
XLDEL1616K-GX16-2		1	●	060	5329144	129,00
XLDEL1616K-GX16-2C		1	●	060	5531865	129,00
XLDEL2020K-GX16-1		1	●	060	5329140	148,00
XLDER1010K-GX16-1		1	■	060	5329017[1]	123,00
XLDER1212K-GX16-0		1	■	060	6090417[1]	123,00
XLDER1212K-GX16-1		1	●	060	5329080	123,00
XLDER1212K-GX16-1C		1	■	060	5531863[1]	123,00
XLDER1212K-GX16-2		1	●	060	5329141	123,00

Bezeichnung / Designation	Sorte / Grade	VE / US		Disc. Gr.	Article No.	EURO Stück / piece
XLDER1212K-GX16-2C		1	■	060	5531862*	123,00
XLDER1616K-GX16-0		1	■	060	6090503*	129,00
XLDER1616K-GX16-0C		1	●	060	6090504	129,00
XLDER1616K-GX16-1		1	●	060	5329097	129,00
XLDER1616K-GX16-1C		1	●	060	5531861	129,00
XLDER1616K-GX16-2		1	●	060	5329143	129,00
XLDER2020K-GX16-1		1	●	060	5329099	148,00
XLDER2020K-GX16-2		1	●	060	5329145	148,00
XNGU0705ANN-F57	WKP25S	10	●	004	6768450	32,00
XNGU0705ANN-F57	WKP35G	10	●	004	7170606	38,40
XNGU0705ANN-F57	WKP35S	10	●	004	6768451	32,00
XNGU0705ANN-F57	WSM35G	10	●	004	8285107	33,60
XNGU0705ANN-F57	WSM35S	10	■	004	6768452*	33,60
XNGU0705ANN-F57	WSP45G	10	●	004	8112910	33,70
XNGX0705ANN-F67	WAK15	10	●	004	6881099	32,00
XNGX0705ANN-F67	WHH15X	10	●	004	7960076	35,20
XNGX0705ANN-F67	WXM15	10	●	004	6881231	32,00
XNGX0904ANN-F67	WAK15	10	■	004	7545138*	31,70
XNGX0904ANN-F67	WHH15X	10	●	004	7960082	34,80
XNGX0904ANN-F67	WXM15	10	■	004	7545139*	31,70
XNGX0904ZNN-F67	WAK15	10	●	004	7545141	31,70
XNGX0904ZNN-F67	WHH15X	10	●	004	7960083	34,80
XNGX0904ZNN-F67	WXM15	10	●	004	7545142	31,70
XNGX1205ANN-F67	WAK15	10	●	004	5364627	35,20
XNGX1205ANN-F67	WHH15X	10	●	004	7960077	38,70
XNGX1205ANN-F67	WXM15	10	●	004	5278370	35,20
XNGX1205ENN-F67	WAK15	10	●	004	5535480	35,20
XNGX1205ENN-F67	WHH15X	10	●	004	7960078	38,70
XNGX1205ENN-F67	WXM15	10	●	004	5535483	35,20
XNGX1205ZNN-F67	WAK15	10	●	004	5535486	35,20
XNGX1205ZNN-F67	WHH15X	10	●	004	7960079	38,70
XNGX1205ZNN-F67	WXM15	10	●	004	5535485	35,20
XNHF070508-D27	WKK25G	10	●	004	8284884	33,60
XNHF070508-D27	WKK25S	10	■	004	6702117*	33,60
XNHF070508-D27	WKP25S	10	●	004	6072489	32,00
XNHF070508-D27	WKP35S	10	■	004	5887670*	32,00
XNHF070508-D57	WKK25G	10	●	004	8284889	33,60
XNHF070508-D57	WKK25S	10	■	004	6702118*	33,60
XNHF070508-D57	WKP25S	10	●	004	6072540	32,00
XNHF070508-D57	WKP35S	10	●	004	5887671	32,00
XNHF070508-D67	WAK15	10	●	004	5692225	32,00
XNHF070508-D67	WKP25S	10	●	004	6072541	32,00
XNHF0705ANN-D27	WKK25G	10	●	004	8284895	33,60
XNHF0705ANN-D27	WKK25S	10	■	004	6702119*	33,60
XNHF0705ANN-D27	WKP25S	10	●	004	6072542	32,00
XNHF0705ANN-D57	WKK25G	10	●	004	8284877	33,60
XNHF0705ANN-D57	WKK25S	10	■	004	6702120*	33,60
XNHF0705ANN-D57	WKP25S	10	●	004	6072543	32,00
XNHF0705ANN-D57	WKP35G	10	●	004	7347412	38,40
XNHF0705ANN-D67	WAK15	10	●	004	5626996	32,00
XNHF090612-D27	WKK25G	10	●	004	8284870	35,70
XNHF090612-D27	WKK25S	10	■	004	6702121*	35,70
XNHF090612-D27	WKP25S	10	●	004	6072545	34,00
XNHF090612-D27	WKP35G	10	●	004	7347417	40,70
XNHF090612-D57	WKK25G	10	●	004	8284886	35,70
XNHF090612-D57	WKK25S	10	■	004	6702122*	35,70
XNHF090612-D57	WKP25S	10	●	004	6072546	34,00
XNHF090612-D57	WKP35S	10	●	004	5871395	34,00
XNHF0906ANN-D27	WKK25G	10	●	004	8284888	35,70
XNHF0906ANN-D27	WKK25S	10	■	004	6702123*	35,70
XNHF0906ANN-D27	WKP25S	10	●	004	6072548	34,00
XNHF0906ANN-D27	WKP35S	10	●	004	5871346	34,00
XNHF0906ANN-D57	WKK25G	10	●	004	8284885	35,70
XNHF0906ANN-D57	WKK25S	10	■	004	6702124*	35,70
XNHF0906ANN-D57	WKP25S	10	●	004	6072550	34,00
XNHF0906ANN-D57	WKP35G	10	●	004	7222946	40,70
XNHF0906ANN-D57	WKP35S	10	●	004	5871217	34,00
XNHX0705ANN-D67	WAK15	10	●	004	6226051	32,00
XNHX0705ANN-D67	WHH15X	10	●	004	7960080	35,20
XNHX0906ANN-D67	WAK15	10	●	004	7220870	34,00

Bezeichnung / Designation	Sorte / Grade	VE / US		Disc. Gr.	Article No.	EURO Stück / piece
XNHX0906ANN-D67	WHH15X	10	●	004	7960081	37,30
XNHX130608R-L65T	WSM45X	10	●	004	6948573	44,70
XNHX130608R-L65T	WSP45G	10	●	004	7924362	37,00
XNHX130608R-L65W	WSM45X	10	●	004	8241532	44,70
XNHX130612R-L65T	WSM45X	10	●	004	6948575	44,70
XNHX130612R-L65T	WSP45G	10	●	004	7924363	37,00
XNHX130616R-L65T	WSM45X	10	●	004	6948577	44,70
XNHX130616R-L65T	WSP45G	10	●	004	7924364	37,00
XNHX130620R-L65T	WSM45X	10	●	004	6948579	44,70
XNHX130624R-L65T	WSM45X	10	●	004	6948591	44,70
XNHX130630R-L65T	WSM45X	10	●	004	6948593	44,70
XNHX130632R-L65T	WSM45X	10	●	004	6948595	44,70
XNHX130632R-L65T	WSP45G	10	●	004	8201961	37,00
XNHX130632R-L65T	WSP45S	10	■	004	6948594*	37,00
XNHX130640R-L65T	WSM45X	10	●	004	6948597	44,70
XNHX130640R-L65T	WSP45G	10	●	004	7924365	37,00
XNHX130640R-L65W	WSM45X	10	●	004	8241531	44,70
XNMF070508-D27	WKK25G	10	●	004	8284896	25,90
XNMF070508-D27	WKK25S	10	■	004	6980901*	25,90
XNMF070508-D27	WKP25S	10	●	004	6980902	24,64
XNMF070508-D27	WKP35S	10	●	004	6980903	24,64
XNMF070508-F57	WKK25G	10	●	004	8441287	25,90
XNMF070508-F57	WKK25S	10	●	004	6980907	25,90
XNMF090612-D27	WKK25G	10	●	004	8441289	27,40
XNMF090612-D27	WKK25S	10	●	004	7220799	27,40
XNMF090612-D27	WKP25S	10	●	004	7220850	26,10
XNMF090612-D27	WKP35G	10	●	004	7220851	31,30
XNMF090612-D57	WKK25G	10	●	004	8441369	27,40
XNMF090612-D57	WKK25S	10	●	004	7220852	27,40
XNMF090612-D57	WKP35G	10	●	004	7220854	31,30
XNMF090612-F57	WKK25G	10	●	004	8284887	27,40
XNMF090612-F57	WKK25S	10	■	004	7220855*	27,40
XNMF090612-F57	WKP25S	10	●	004	7220856	26,10
XNMU070508-F57	WKP25S	10	●	004	6768458	24,64
XNMU070508-F57	WKP35G	10	●	004	7170616	29,60
XNMU070508-F57	WKP35S	10	●	004	6768459	24,64
XNMU070508-F57	WSM35G	10	●	004	8285108	25,90
XNMU070508-F57	WSM35S	10	■	004	7299624*	25,90
XNMU070508-F57	WSP45G	10	●	004	7924359	25,90
XNMU0705ANN-F27	WKK25G	10	●	004	8284873	25,90
XNMU0705ANN-F27	WKK25S	10	■	004	6768434*	25,90
XNMU0705ANN-F27	WKP25S	10	●	004	6768432	24,64
XNMU0705ANN-F27	WKP35G	10	●	004	7170607	29,60
XNMU0705ANN-F27	WKP35S	10	●	004	6768433	24,64
XNMU0705ANN-F57	WKP25S	10	●	004	6768435	24,64
XNMU0705ANN-F57	WKP35G	10	●	004	7169072	29,60
XNMU0705ANN-F57	WKP35S	10	●	004	6768436	24,64
XNMU0705ANN-F57	WSM35G	10	●	004	8285109	25,90
XNMU0705ANN-F57	WSM35S	10	■	004	7299625*	25,90
XNMU0705ANN-F57	WSP45G	10	●	004	7924360	25,90
XNMU0705ANN-F67	WKP25S	10	●	004	6768438	24,64
XNMU0705ANN-F67	WKP35G	10	●	004	7170592	29,60
XNMU0705ANN-F67	WSM35G	10	●	004	8285110	25,90
XNMU0705ANN-F67	WSM35S	10	■	004	7299626*	25,90
XNMU0705ANN-F67	WSM45X	10	●	004	7469728	31,30
XNMU090612-F57	WKP25S	10	●	004	6943653	30,30
XNMU090612-F57	WKP35G	10	●	004	7182164	36,40
XNMU090612-F57	WSP45G	10	●	004	8112911	31,80
XNMU0906ANN-F27	WKK25G	10	●	004	8441370	31,90
XNMU0906ANN-F27	WKK25S	10	●	004	6943637	31,90
XNMU0906ANN-F27	WKP25S	10	●	004	6943635	30,30
XNMU0906ANN-F27	WKP35G	10	●	004	7182161	36,40
XNMU0906ANN-F27	WKP35S	10	●	004	7676905	30,30
XNMU0906ANN-F57	WKP25S	10	●	004	6943638	30,30
XNMU0906ANN-F57	WKP35G	10	●	004	7182162	36,40
XNMU0906ANN-F57	WSM35G	10	●	004	8441286	31,90
XNMU0906ANN-F57	WSM35S	10	●	004	7469726	31,90
XNMU0906ANN-F57	WSP45G	10	●	004	8112912	31,80
XNMU0906ANN-F67	WKP25S	10	●	004	6943651	30,30
XNMU0906ANN-F67	WKP35G	10	●	004	7182163	36,40

Bezeichnung / Designation	Sorte / Grade	VE / US		Disc. Gr.	Article No.	EURO Stück / piece
XNMU0906ANN-F67	WSM45X	10	●	004	7469727	38,50
XOEN12T308R-A-A88	WDN20	1	●	006	7670458	89,70
XOEN12T308R-F-A88	WDN20	1	●	006	7670522	108,00
XOEN12T3AZR-A-A88	WDN20	1	●	006	7670459	89,70
XOEX12T308N-F-A88	WDN20	1	●	006	7670521	108,00
XOEX12T3AZR-F-A88	WDN20	1	●	006	7670520	108,00
YE3		1	●	095	5010080	14,46
YE3-1.5N		1	●	095	5010088	18,34
YE3-1N		1	●	095	5010084	18,34
YE3-1P		1	●	095	5010108	18,34
YE3-2N		1	●	095	5010092	18,34
YE3-2P		1	●	095	5010104	18,34
YE3-3N		1	●	095	5010096	18,34
YE3-3P		1	●	095	5010100	18,34
YE4		1	●	095	5010081	17,53
YE4-1.5N		1	●	095	5010090	22,96
YE4-1N		1	●	095	5010086	22,96
YE4-1P		1	●	095	5010110	22,96
YE4-2N		1	●	095	5010094	22,96
YE4-2P		1	●	095	5010106	22,96
YE4-3N		1	●	095	5010098	22,96
YE4-3P		1	●	095	5010102	22,96
YI3		1	●	095	5010082	14,46
YI3-1.5N		1	●	095	5010089	18,34
YI3-1N		1	●	095	5010085	18,34
YI3-1P		1	●	095	5010109	18,34
YI3-2N		1	●	095	5010093	18,34
YI3-2P		1	●	095	5010105	18,34
YI3-3N		1	●	095	5010097	18,34
YI3-3P		1	●	095	5010101	18,34
YI4		1	●	095	5010083	17,53
YI4-1.5N		1	●	095	5010091	22,96
YI4-1N		1	●	095	5010087	22,96
YI4-1P		1	●	095	5010111	22,96
YI4-2N		1	●	095	5010095	22,96
YI4-2P		1	●	095	5010107	22,96
YI4-3N		1	●	095	5010099	22,96
YI4-3P		1	●	095	5010103	22,96
Z3213-1-6		1	●	ZS2	5073969	84,50
Z3216-6-10		1	●	ZS2	5073971	190,00
Z3218-1-10.5		1	●	ZS2	5073973	73,20
Z3218TIN-1-10.5		1	■	ZS2	5073974*	195,00
Z3219-1-13		1	●	ZS2	5073975	113,00
Z3219TIN-1-13		1	●	ZS2	5073976	250,00
Z3515-1-10.5		1	●	ZS2	5073983	187,00
Z3516-1-13		1	●	ZS2	5073984	326,00
Z3518-1-10.5		1	■	ZS2	5073985*	146,00
Z3711TIN-6.3-20.5		1	●	ZS2	5073989	115,00
ZDGT150404R-K85	WK10	10	●	009	5004875	22,91
ZDGT150404R-K85	WNN15	10	●	009	6765185	31,50
ZDGT150404R-K85	WXN15	10	●	009	5038976	31,50
ZDGT150408R-K85	WK10	10	●	009	5004877	22,91
ZDGT150408R-K85	WNN15	10	●	009	6765186	31,50
ZDGT150408R-K85	WXN15	10	●	009	5021599	31,50
ZDGT150412R-K85	WK10	10	●	009	5004879	22,91
ZDGT150412R-K85	WNN15	10	●	009	6765187	31,50
ZDGT150412R-K85	WXN15	10	●	009	5024077	31,50
ZDGT150416R-K85	WK10	10	●	009	5004881	22,91
ZDGT150416R-K85	WNN15	10	●	009	6765188	31,50
ZDGT150416R-K85	WXN15	10	●	009	5022028	31,50
ZDGT150420R-K85	WK10	10	●	009	5004883	22,91
ZDGT150420R-K85	WNN15	10	●	009	6765189	31,50
ZDGT150420R-K85	WXN15	10	●	009	5022014	31,50
ZDGT150430R-K85	WK10	10	●	009	5004885	22,91
ZDGT150430R-K85	WNN15	10	●	009	6765301	31,50
ZDGT150430R-K85	WXN15	10	●	009	5022020	31,50
ZDGT150440R-K85	WK10	10	●	009	5004887	22,91
ZDGT150440R-K85	WNN15	10	●	009	6765302	31,50
ZDGT150440R-K85	WXN15	10	●	009	5021970	31,50
ZDGT15A404R-K85	WMG40	10	●	009	7454371	22,91

Bezeichnung / Designation	Sorte / Grade	VE / US		Disc. Gr.	Article No.	EURO Stück / piece
ZDGT15A408R-K85	WMG40	10	●	009	7454372	22,91
ZDGT15A412R-K85	WMG40	10	●	009	7496765	22,91
ZDGT15A416R-K85	WMG40	10	●	009	7454373	22,91
ZDGT15A420R-K85	WMG40	10	●	009	7454374	22,91
ZDGT15A430R-K85	WMG40	10	●	009	7454376	22,91
ZDGT15A440R-K85	WMG40	10	●	009	7454377	22,91
ZDGT200508R-K85	WK10	10	●	009	5004889	30,90
ZDGT200508R-K85	WNN15	10	●	009	6765303	42,50
ZDGT200512R-K85	WK10	10	●	009	5004891	30,90
ZDGT200516R-K85	WK10	10	●	009	5004893	30,90
ZDGT200520R-K85	WK10	10	●	009	5004895	30,90
ZDGT200520R-K85	WNN15	10	●	009	6765306	42,50
ZDGT200530R-K85	WK10	10	●	009	5004899	30,90
ZDGT200530R-K85	WNN15	10	●	009	6765307	42,50
ZDGT200540R-K85	WK10	10	●	009	5004873	30,90
ZDGT200540R-K85	WNN15	10	●	009	6765308	42,50
ZDGT200550R-K85	WK10	10	●	009	5004905	30,90
ZDGT200550R-K85	WNN15	10	●	009	6765309	42,50
ZDGT200560R-K85	WK10	10	●	009	5004901	30,90
ZDGT200564R-K85	WK10	10	●	009	5004903	30,90
ZDGT20A508R-K85	WMG40	10	●	009	7454379	30,90
ZDGT20A516R-K85	WMG40	10	●	009	7454381	30,90
ZDGT20A520R-K85	WMG40	10	●	009	7454382	30,90
ZDGT20A530R-K85	WMG40	10	●	009	7454384	30,90
ZDGT20A540R-K85	WMG40	10	●	009	7454385	30,90
ZDGT20A550R-K85	WMG40	10	●	009	7496766	30,90
01,2M6X004 ISO 2338		1	●	095	6728375	1,79
03,0M6X008 ISO 8734		1	●	095	7624809	3,39
03,0M6X010 ISO 8734		1	●	095	7356205	3,39
03,0M6X014 ISO 8734		1	●	095	7835748	3,39
03,0M6X016 ISO 8734		1	●	095	7201605	3,39
08,0M6X020 ISO8735		1	●	095	6730811	1,79
112302P050		1	●	095	5578707	467,00
20160-M3		1	●	TH1	5075777	25,20
20160-M4		1	●	TH1	5075778	27,10
20160-M5		1	●	TH1	5075779	27,10
20160-M6		1	●	TH1	5075780	28,60
20160-M8		1	●	TH1	5075781	30,40
20160-M10		1	●	TH1	5075782	38,50
20160-M12		1	●	TH1	5075783	47,60
20165-M2		1	●	TH1	5075784	32,40
20165-M2.5		1	●	TH1	5075785	31,40
20165-M3		1	●	TH1	5075786	21,29
20165-M3.5		1	●	TH1	5075787	26,30
20165-M4		1	●	TH1	5075788	20,83
20165-M5		1	●	TH1	5075789	22,63
20165-M6		1	●	TH1	5075790	23,13
20165-M8		1	●	TH1	5075791	25,80
20167-M3		1	●	TH1	5075799	26,60
20167-M4		1	●	TH1	5075800	27,10
20167-M5		1	●	TH1	5075801	27,60
20167-M6		1	●	TH1	5075802	28,60
20167-M8		1	●	TH1	5075803	32,80
20167-M10		1	●	TH1	5075804	41,40
20167-M12		1	●	TH1	5075805	51,40
202061-M2		1	●	TH4	5075824	54,40
202061-M2.5		1	●	TH4	5075825	54,40
202061-M3		1	●	TH4	5075826	43,30
202061-M3.5		1	●	TH4	5075827	44,30
202061-M4		1	●	TH4	5075828	43,80
202061-M5		1	●	TH4	5075829	46,30
202061-M6		1	●	TH4	5075830	47,80
202061-M8		1	●	TH4	5075831	55,00
202061-M10		1	●	TH4	5075832	65,20
20207-EGM4		1	●	TH4	5075833	56,90
20207-EGM5		1	●	TH4	5075834	60,20
20207-EGM6		1	●	TH4	5075835	62,20
20207-EGM8		1	●	TH4	5075836	71,50
20211-M1		1	●	TH1	5075863	55,20
20211-M1.2		1	●	TH1	5075864	53,30

Bezeichnung / Designation	Sorte / Grade	VE / US		Disc. Gr.	Article No.	EURO Stück / piece
20211-M1.4		1	●	TH1	5075865	47,10
20211-M1.6		1	●	TH1	5075866	44,30
20211-M1.7		1	●	TH1	5075867	44,70
20211-M1.8		1	■	TH1	5075868*	40,90
20211-M2		1	●	TH1	5075869	34,70
20211-M2.5		1	●	TH1	5075870	33,80
20211-M2.6		1	■	TH1	5075871*	36,70
20211-M3		1	●	TH1	5075872	27,20
20211-M4		1	●	TH1	5075873	28,10
20211-M5		1	●	TH1	5075874	29,90
20211-M6		1	●	TH1	5075875	29,90
20211-M8		1	●	TH1	5075876	34,90
20211-M10		1	●	TH1	5075877	41,70
202161-M1		1	●	TH4	5200305	70,50
202161-M1.2		1	●	TH4	5200306	68,50
202161-M1.4		1	●	TH4	5075922	62,30
202161-M1.6		1	●	TH4	5075923	59,10
202161-M1.8		1	●	TH4	5075924	59,10
202161-M2		1	●	TH4	5075925	46,80
202161-M2.2		1	●	TH4	5075926	49,00
202161-M2.5		1	●	TH4	5075927	46,80
202161-M3		1	●	TH4	5075928	37,80
202161-M3.5		1	●	TH4	5075930	39,30
202161-M4		1	●	TH4	5075931	38,80
202161-M4.5		1	●	TH4	5075932	51,70
202161-M5		1	●	TH4	5075933	40,70
202161-M6		1	●	TH4	5075934	41,20
202161-M8		1	●	TH4	5075935	48,00
202161-M10		1	●	TH4	5075936	56,20
2021616-M2	TICN	1	●	TH4	5075937	53,60
2021616-M2.5	TICN	1	●	TH4	5075938	53,60
2021616-M3	TICN	1	●	TH4	5075939	45,20
2021616-M3.5	TICN	1	●	TH4	5075940	46,50
2021616-M4	TICN	1	●	TH4	5075941	48,00
2021616-M5	TICN	1	●	TH4	5075942	49,80
2021616-M6	TICN	1	●	TH4	5075943	62,40
2021616-M8	TICN	1	●	TH4	5075944	73,80
2021616-M10	TICN	1	●	TH4	5075945	87,50
2021763-M2	ACN	1	●	TH4	5664546	53,60
2021763-M2.5	ACN	1	●	TH4	5664547	53,60
2021763-M3	ACN	1	●	TH4	5664548	45,20
2021763-M3.5	ACN	1	●	TH4	5664549	46,50
2021763-M4	ACN	1	●	TH4	5664560	48,00
2021763-M5	ACN	1	●	TH4	5664561	49,80
2021763-M6	ACN	1	●	TH4	5664562	62,40
2021763-M8	ACN	1	●	TH4	5664563	73,80
2021763-M10	ACN	1	●	TH4	5664564	87,50
202661-M12		1	●	TH4	5076031	75,60
202661-M14		1	●	TH4	5076032	94,10
202661-M16		1	●	TH4	5076033	108,00
202661-M20		1	●	TH4	5076034	159,00
202661-M24		1	●	TH4	5076035	210,00
2026616-M12	TICN	1	●	TH4	6786979	98,20
2026616-M14	TICN	1	●	TH4	6787020	122,00
2026616-M16	TICN	1	●	TH4	6787021	140,00
2026616-M20	TICN	1	●	TH4	6787022	207,00
2026616-M24	TICN	1	●	TH4	6787023	272,00
2026763-M12	ACN	1	●	TH4	5664565	93,80
2026763-M16	ACN	1	●	TH4	5664566	127,00
2026763-M20	ACN	1	●	TH4	5664567	216,00
20311-M1		1	●	TH1	5076106	48,60
20311-M1.2		1	●	TH1	5076107	48,60
20311-M1.4		1	●	TH1	5076108	42,80
20311-M1.6		1	●	TH1	5076109	39,00
20311-M1.7		1	●	TH1	5076110	41,90
20311-M1.8		1	●	TH1	5076111	39,00
20311-M2		1	●	TH1	5076112	32,80
20311-M2.2		1	●	TH1	5076113	33,40
20311-M2.3		1	●	TH1	5076114	35,20
20311-M2.5		1	●	TH1	5076115	31,90

Bezeichnung / Designation	Sorte / Grade	VE / US		Disc. Gr.	Article No.	EURO Stück / piece
20311-M2.6		1	●	TH1	5076116	32,40
20311-M3		1	●	TH1	5076117	24,47
20311-M3.5		1	●	TH1	5076118	25,40
20311-M4		1	●	TH1	5076119	25,40
20311-M5		1	●	TH1	5076120	25,40
20311-M6		1	●	TH1	5076121	26,30
20311-M7		1	●	TH1	5076122	30,30
20311-M8		1	●	TH1	5076123	29,50
20311-M10		1	●	TH1	5076124	35,30
203115-M3	TIN	1	●	TH1	5076134	33,00
203115-M3.5	TIN	1	●	TH1	5076135	33,90
203115-M4	TIN	1	●	TH1	5076136	37,20
203115-M5	TIN	1	●	TH1	5076137	37,70
203115-M6	TIN	1	●	TH1	5076138	46,70
203115-M7	TIN	1	●	TH1	5076139	52,80
203115-M8	TIN	1	●	TH1	5076140	56,50
203115-M10	TIN	1	●	TH1	5076141	65,00
20312-M3	NIT	1	●	TH4	5076148	31,60
20312-M4	NIT	1	●	TH4	5076149	32,00
20312-M5	NIT	1	●	TH4	5076150	32,00
20312-M6	NIT	1	●	TH4	5076151	32,50
20312-M8	NIT	1	●	TH4	5076152	37,80
20312-M10	NIT	1	●	TH4	5076153	45,60
20316-M3		1	●	TH4	5076190	34,40
20316-M4		1	●	TH4	5076191	35,90
20316-M5		1	●	TH4	5076192	36,80
20316-M6		1	●	TH4	5076193	37,30
20316-M8		1	●	TH4	5076194	41,20
20316-M10		1	●	TH4	5076195	49,40
20361-M2		1	●	TH1	5076324	39,00
20361-M2.5		1	●	TH1	5076325	36,70
20361-M3		1	●	TH1	5076326	29,50
20361-M4		1	●	TH1	5076328	29,50
20361-M5		1	●	TH1	5076329	29,90
20361-M6		1	●	TH1	5076330	29,90
20361-M8		1	●	TH1	5076331	34,50
20361-M10		1	●	TH1	5076332	39,40
20361-M12		1	●	TH1	5076333	47,10
20361-M14		1	●	TH1	5076334	59,90
20361-M16		1	●	TH1	5076335	69,80
20361-M18		1	●	TH1	5076336	104,00
20361-M20		1	●	TH1	5076337	99,80
20361-M24		1	●	TH1	5076339	136,00
20361-M27		1	●	TH1	5076340	188,00
20361-M30		1	●	TH1	5076341	219,00
20361-M33		1	●	TH1	5076342	283,00
20361-M36		1	●	TH1	5076343	346,00
20361-M42		1	●	TH1	5076344	526,00
20362-M12	NIT	1	●	TH4	5076374	61,10
20362-M16	NIT	1	●	TH4	5076376	89,20
20362-M20	NIT	1	●	TH4	5076377	131,00
204069-EGM4		1	●	TH4	5076445	54,20
204069-EGM5		1	●	TH4	5076446	57,40
204069-EGM6		1	●	TH4	5076447	59,90
204069-EGM8		1	●	TH4	5076448	68,10
204089-EGM4		1	●	TH4	5076449	64,20
204089-EGM5		1	●	TH4	5076450	67,50
204089-EGM6		1	●	TH4	5076451	70,10
204089-EGM8		1	●	TH4	5076452	79,40
20410-M2		1	●	TH1	5076453	39,00
20410-M2.5		1	●	TH1	5076454	37,60
20410-M3		1	●	TH1	5076455	30,30
20410-M3.5		1	●	TH1	5076456	34,00
20410-M4		1	●	TH1	5076457	30,30
20410-M5		1	●	TH1	5076458	31,20
20410-M6		1	●	TH1	5076459	32,60
20410-M7		1	●	TH1	5076460	41,30
20410-M8		1	●	TH1	5076461	38,50
20410-M10		1	●	TH1	5076462	44,90
2041006-M4	TICN	1	●	TH1	5076466	48,00

Bezeichnung / Designation	Sorte / Grade	VE / US		Disc. Gr.	Article No.	EURO Stück / piece
2041006-M5	TICN	1	●	TH1	5076467	**44,20**
2041006-M6	TICN	1	●	TH1	5076468	**57,70**
2041006-M8	TICN	1	●	TH1	5076469	**65,40**
2041006-M10	TICN	1	●	TH1	5076470	**80,70**
204101-M3		1	●	TH4	5076471	**57,00**
204101-M4		1	●	TH4	5076472	**60,10**
204101-M5		1	●	TH4	5076473	**63,00**
204101-M6		1	●	TH4	5076474	**65,00**
204101-M8		1	●	TH4	5076475	**74,70**
204101-M10		1	●	TH4	5076476	**88,30**
204101-M12		1	●	TH4	5076477	**112,00**
204101-M16		1	●	TH4	5076478	**146,00**
2041014-MJ3		1	○	TH4	5200307	**85,70**
2041014-MJ4		1	○	TH4	5200308	**90,60**
2041014-MJ5		1	●	TH4	5200309	**94,20**
2041014-MJ6		1	●	TH4	5200310	**97,90**
2041015-M3	TIN	1	●	TH4	5076479	**60,40**
2041015-M4	TIN	1	●	TH4	5076480	**66,50**
2041015-M5	TIN	1	●	TH4	5076481	**69,30**
2041015-M6	TIN	1	●	TH4	5076482	**78,60**
2041015-M8	TIN	1	●	TH4	5076483	**93,70**
2041015-M10	TIN	1	●	TH4	5076484	**109,00**
2041015-M12	TIN	1	●	TH4	5076485	**133,00**
2041015-M16	TIN	1	●	TH4	5076486	**168,00**
204102-M2		1	●	TH4	5076487	**51,90**
204102-M2.5		1	●	TH4	5076488	**49,90**
204102-M3		1	●	TH4	5076489	**42,70**
204102-M4		1	●	TH4	5076491	**42,70**
204102-M5		1	●	TH4	5076492	**44,60**
204102-M6		1	●	TH4	5076493	**46,50**
204102-M8		1	●	TH4	5076494	**53,30**
204102-M10		1	●	TH4	5076495	**63,00**
20410206-M2	TICN	1	●	TH4	7513051	**71,40**
20410206-M2.5	TICN	1	●	TH4	7513052	**68,60**
20410206-M3	TICN	1	●	TH4	7513053	**58,70**
20410206-M4	TICN	1	●	TH4	7513054	**58,70**
20410206-M5	TICN	1	●	TH4	7513055	**61,30**
20410206-M6	TICN	1	●	TH4	7513056	**64,00**
20410206-M8	TICN	1	●	TH4	7513057	**73,30**
20410206-M10	TICN	1	●	TH4	7513058	**99,40**
204104-M2		1	●	TH4	5076496	**58,60**
204104-M3		1	●	TH4	5076497	**49,40**
204104-M3.5		1	●	TH4	5076498	**53,40**
204104-M4		1	●	TH4	5076499	**49,40**
204104-M5		1	●	TH4	5076500	**51,90**
204104-M6		1	●	TH4	5076501	**53,90**
204104-M8		1	●	TH4	5076502	**61,10**
204104-M10		1	●	TH4	5076503	**72,30**
204105-M3	TIN	1	●	TH1	5076506	**39,10**
204105-M4	TIN	1	●	TH1	5076507	**42,90**
204105-M5	TIN	1	●	TH1	5076508	**43,30**
204105-M6	TIN	1	●	TH1	5076509	**52,80**
204105-M8	TIN	1	●	TH1	5076510	**66,00**
204105-M10	TIN	1	●	TH1	5076511	**75,40**
204107-M3		1	■	TH4	5076512*	**40,70**
204107-M4		1	■	TH4	5076513*	**41,20**
204107-M5		1	■	TH4	5076514*	**42,70**
204107-M6		1	■	TH4	5076515*	**44,10**
204107-M8		1	■	TH4	5076516*	**51,40**
204107-M10		1	■	TH4	5076517*	**61,10**
20410T2-M5	THL	1	●	TH5	6692231	**76,60**
20410T2-M6	THL	1	●	TH5	6692232	**87,50**
20410T2-M8	THL	1	●	TH5	6692233	**109,00**
20410T2-M10	THL	1	●	TH5	6692234	**131,00**
20410TR-M5		1	●	TH5	6382839	**76,60**
20410TR-M6		1	●	TH5	6382870	**87,50**
20410TR-M8		1	●	TH5	6382871	**109,00**
20410TR-M10		1	●	TH5	6382872	**131,00**
20411-M3		1	●	TH1	5076518	**32,20**
20411-M4		1	●	TH1	5076519	**32,20**

Bezeichnung / Designation	Sorte / Grade	VE / US		Disc. Gr.	Article No.	EURO Stück / piece
20411-M5		1	●	TH1	5076520	**32,60**
20411-M6		1	●	TH1	5076521	**34,00**
2041210-M5		1	●	TH5	5076522	**46,90**
2041210-M6		1	●	TH5	5076523	**49,00**
2041210-M8		1	■	TH5	5076524*	**57,80**
2041210-M10		1	●	TH5	5076525	**67,30**
2041215-M4	TIN	1	●	TH5	5076526	**49,80**
2041215-M5	TIN	1	●	TH5	5076527	**57,80**
2041215-M6	TIN	1	●	TH5	5076528	**68,00**
2041215-M8	TIN	1	●	TH5	5076529	**82,30**
2041215-M10	TIN	1	●	TH5	5076530	**95,20**
20416-M1		1	●	TH4	5200326	**65,30**
20416-M1.2		1	●	TH4	5200325	**65,30**
20416-M1.4		1	●	TH4	5076547	**64,10**
20416-M1.6		1	●	TH4	5076548	**61,10**
20416-M1.8		1	●	TH4	5076549	**61,10**
20416-M2		1	●	TH4	5076550	**50,90**
20416-M2.2		1	●	TH4	5076551	**53,40**
20416-M2.5		1	●	TH4	5076552	**49,90**
20416-M3		1	●	TH4	5076553	**41,70**
20416-M3.5		1	●	TH4	5076554	**46,50**
20416-M4		1	●	TH4	5076555	**41,70**
20416-M4.5		1	●	TH4	5076556	**55,20**
20416-M5		1	●	TH4	5076557	**44,10**
20416-M6		1	●	TH4	5076558	**46,10**
20416-M8		1	●	TH4	5076559	**52,40**
20416-M10		1	●	TH4	5076560	**63,00**
2041606-M2	TICN	1	●	TH4	5076561	**57,40**
2041606-M2.5	TICN	1	●	TH4	5076562	**56,40**
2041606-M3	TICN	1	●	TH4	5076563	**49,10**
2041606-M4	TICN	1	●	TH4	5076564	**51,10**
2041606-M5	TICN	1	●	TH4	5076565	**53,40**
2041606-M6	TICN	1	●	TH4	5076566	**65,50**
2041606-M8	TICN	1	●	TH4	5076567	**79,30**
2041606-M10	TICN	1	●	TH4	5076568	**95,30**
204164-MJ3		1	●	TH4	5200324	**62,40**
204164-MJ4		1	●	TH4	5200323	**62,40**
204164-MJ5		1	●	TH4	5200322	**66,10**
204164-MJ6		1	●	TH4	5200321	**57,10**
204164-MJ8		1	●	TH4	5200320	**78,30**
204164-MJ10		1	●	TH4	5200319	**94,20**
2041663-M2	ACN	1	●	TH4	5664597	**57,40**
2041663-M2.5	ACN	1	●	TH4	5664598	**56,40**
2041663-M3	ACN	1	●	TH4	5664599	**49,10**
2041663-M3.5	ACN	1	●	TH4	5664600	**50,70**
2041663-M4	ACN	1	●	TH4	5664601	**51,10**
2041663-M5	ACN	1	●	TH4	5664602	**53,40**
2041663-M6	ACN	1	●	TH4	5664603	**65,50**
2041663-M8	ACN	1	●	TH4	5664604	**79,30**
2041663-M10	ACN	1	●	TH4	5664605	**95,30**
20417-M3		1	●	TH4	5076569	**101,00**
20417-M4		1	●	TH4	5076570	**101,00**
20417-M5		1	●	TH4	5076571	**107,00**
20417-M6		1	●	TH4	5076572	**111,00**
20430-M2		1	●	TH1	5076573	**41,40**
20430-M2.5		1	●	TH1	5076574	**40,50**
20430-M3		1	●	TH1	5076575	**33,00**
20430-M4		1	●	TH1	5076577	**33,00**
20430-M5		1	●	TH1	5076578	**35,30**
20430-M6		1	●	TH1	5076579	**36,70**
20430-M8		1	●	TH1	5076580	**41,70**
20430-M10		1	●	TH1	5076581	**49,00**
20460-M3		1	●	TH1	5076584	**36,70**
20460-M4		1	●	TH1	5076585	**35,30**
20460-M5		1	●	TH1	5076586	**36,70**
20460-M6		1	●	TH1	5076587	**36,70**
20460-M8		1	●	TH1	5076588	**39,90**
20460-M10		1	●	TH1	5076589	**49,90**
20460-M12		1	●	TH1	5076590	**58,90**
20460-M14		1	●	TH1	5076591	**75,30**

Bezeichnung / Designation	Sorte / Grade	VE / US		Disc. Gr.	Article No.	EURO Stück / piece
20460-M16		1	●	TH1	5076592	80,70
20460-M18		1	●	TH1	5076593	122,00
20460-M20		1	●	TH1	5076594	120,00
20460-M22		1	●	TH1	5076595	167,00
20460-M24		1	●	TH1	5076596	153,00
20460-M30		1	●	TH1	5076598	265,00
20460-M36		1	●	TH1	5076600	446,00
2046006-M12	TICN	1	●	TH1	5076601	101,00
2046006-M14	TICN	1	●	TH1	5076602	123,00
2046006-M16	TICN	1	●	TH1	5076603	134,00
2046006-M20	TICN	1	●	TH1	5076604	229,00
204602-M12		1	●	TH4	5076605	88,30
204602-M14		1	●	TH4	5076606	108,00
204602-M16		1	●	TH4	5076607	120,00
204602-M18		1	●	TH4	5076608	181,00
204602-M20		1	●	TH4	5076609	179,00
204605-M12	TIN	1	●	TH1	5076610	92,40
204605-M14	TIN	1	●	TH1	5076611	112,00
204605-M16	TIN	1	●	TH1	5076612	118,00
204605-M20	TIN	1	●	TH1	5076613	206,00
204607-M12		1	■	TH4	5076614*	79,50
204607-M16		1	■	TH4	5076615*	111,00
20460T2-M12	THL	1	●	TH5	6692235	153,00
20460TR-M12		1	●	TH5	6382873	153,00
20461-M6		1	●	TH1	5076616	38,10
20461-M8		1	●	TH1	5076617	42,20
20461-M10		1	●	TH1	5076618	51,70
20461-M12		1	●	TH1	5076619	61,70
2046210-M12		1	●	TH5	5076626	87,80
2046215-M12	TIN	1	●	TH5	5076627	118,00
20466-M12		1	●	TH4	5076628	86,40
20466-M14		1	●	TH4	5076629	106,00
20466-M16		1	●	TH4	5076630	116,00
20466-M20		1	●	TH4	5076631	178,00
20466-M24		1	●	TH4	5076632	223,00
20466-M30		1	●	TH4	5076634	348,00
20466-M36		1	●	TH4	5076636	534,00
2046606-M12	TICN	1	●	TH4	5076637	119,00
2046606-M16	TICN	1	●	TH4	5076638	157,00
2046663-M12	ACN	1	●	TH4	5664606	119,00
2046663-M16	ACN	1	●	TH4	5664607	157,00
2046663-M20	ACN	1	●	TH4	5664608	267,00
20467-M8		1	●	TH4	5076639	135,00
20467-M10		1	●	TH4	5076640	164,00
20467-M12		1	●	TH4	5076641	200,00
20480-M12		1	●	TH1	5076646	61,70
20480-M16		1	●	TH1	5076648	87,10
205106-M3		1	●	TH1	6319495	41,70
205106-M4		1	●	TH1	5076669	41,70
205106-M5		1	●	TH1	5076670	41,70
205106-M6		1	●	TH1	5076671	41,70
205106-M8		1	●	TH1	5076672	47,90
205106-M10		1	●	TH1	5076673	58,50
2051062-M3	THL	1	●	TH1	6319496	50,30
2051062-M4	THL	1	●	TH1	5076674	50,30
2051062-M5	THL	1	●	TH1	5076675	50,30
2051062-M6	THL	1	●	TH1	5076676	68,50
2051062-M8	THL	1	●	TH1	5076677	84,20
2051062-M10	THL	1	●	TH1	5076678	88,10
2051315-M5	TIN	1	●	TH4	5076706	48,10
2051315-M6	TIN	1	●	TH4	5076707	55,30
2051315-M8	TIN	1	●	TH4	5076708	73,40
2051315-M10	TIN	1	●	TH4	5076709	90,70
2056062-M12	THL	1	●	TH1	5076927	102,00
2056062-M16	THL	1	●	TH1	5076928	139,00
2056062-M20	THL	1	●	TH1	5076929	238,00
2056062-M24	THL	1	●	TH1	5076930	289,00
2056315-M12	TIN	1	●	TH4	5076964	97,10
2056315-M14	TIN	1	●	TH4	5076965	119,00
2056315-M16	TIN	1	●	TH4	5076966	124,00

Bezeichnung / Designation	Sorte / Grade	VE / US		Disc. Gr.	Article No.	EURO Stück / piece
2056315-M20	TIN	1	●	TH4	5076967	216,00
20844-M6	NID	1	■	TH4	5077133*	66,00
20844-M8	NID	1	■	TH4	5077134*	75,60
20844-M10	NID	1	■	TH4	5077135*	86,40
20844-M12	NID	1	■	TH4	5077136*	113,00
2084805-M5	TIN	1	●	TH4	5077147	86,10
2084805-M6	TIN	1	●	TH4	5077148	89,80
2084805-M8	TIN	1	●	TH4	5077149	101,00
2084805-M10	TIN	1	●	TH4	5077150	114,00
20890-M2		1	●	TH4	5077157	72,30
20890-M2.5		1	●	TH4	5077158	63,10
20890-M3		1	○	TH4	5077159	49,40
20890-M4		1	●	TH4	5077161	49,40
20890-M5		1	●	TH4	5077162	54,30
20890-M6		1	●	TH4	5077163	55,30
20890-M8		1	●	TH4	5077165	69,90
20890-M10		1	●	TH4	5077166	82,40
20890-M12		1	●	TH4	5077167	108,00
20890-M16		1	●	TH4	5077169	155,00
20944-M5	VAP	1	●	TH4	5077172	73,60
20944-M6	VAP	1	●	TH4	5077173	78,90
20944-M8	VAP	1	●	TH4	5077174	95,00
20944-M10	VAP	1	●	TH4	5077175	112,00
20944-M12	VAP	1	●	TH4	5077176	139,00
20954-M14	VAP	1	●	TH4	5077177	171,00
20954-M16	VAP	1	●	TH4	5077178	225,00
212161-M8X0.75		1	●	TH4	5077256	92,20
212161-M8X1		1	●	TH4	5077257	66,90
212161-M10X1		1	●	TH4	5077258	69,90
21216106-M8X0.75	TICN	1	●	TH4	7511521	127,00
21216106-M8X1	TICN	1	●	TH4	7511522	92,00
2121763-M6X0.75	ACN	1	●	TH4	5664568	94,80
2121763-M8X0.75	ACN	1	●	TH4	5664569	111,00
2121763-M8X1	ACN	1	●	TH4	5664570	97,30
2121763-M10X1	ACN	1	●	TH4	5664571	113,00
212661-M10X1.25		1	●	TH4	5077293	80,20
212661-M12X1		1	●	TH4	5077288	85,40
212661-M12X1.25		1	●	TH4	5077294	92,60
212661-M12X1.5		1	●	TH4	5077289	80,50
212661-M14X1		1	●	TH4	5077290	113,00
212661-M14X1.5		1	●	TH4	5077291	109,00
212661-M16X1		1	●	TH4	5077292	123,00
21266106-M10X1.25	TICN	1	●	TH4	7511523	110,00
21266106-M12X1	TICN	1	●	TH4	7511524	117,00
21266106-M12X1.25	TICN	1	●	TH4	7511525	127,00
21266106-M12X1.5	TICN	1	●	TH4	7511526	111,00
21266106-M14X1	TICN	1	●	TH4	7511527	155,00
21266106-M14X1.5	TICN	1	●	TH4	7511528	149,00
21266106-M16X1	TICN	1	●	TH4	7511529	169,00
2126763-M12X1	ACN	1	●	TH4	5664572	112,00
2126763-M12X1.5	ACN	1	●	TH4	5664573	112,00
2126763-M14X1.5	ACN	1	●	TH4	5664574	146,00
21311-M2X0.25		1	●	TH1	5077333	65,30
21311-M3X0.35		1	●	TH1	5077336	45,30
21311-M4X0.35		1	●	TH1	5077338	60,80
21311-M4X0.5		1	●	TH1	5077339	42,60
21311-M5X0.35		1	●	TH1	5077340	70,70
21311-M5X0.5		1	●	TH1	5077341	42,60
21311-M6X0.75		1	●	TH1	5077342	45,30
21311-M7X0.75		1	●	TH1	5077343	57,10
21311-M2.2X0.25		1	●	TH1	5077334	62,60
21311-M2.5X0.35		1	●	TH1	5077335	58,00
21311-M3.5X0.35		1	●	TH1	5077337	56,20
21361-M4X0.5		1	●	TH1	5077427	42,60
21361-M5X0.5		1	●	TH1	5077428	45,30
21361-M6X0.5		1	●	TH1	5077429	47,10
21361-M6X0.75		1	●	TH1	5077430	45,30
21361-M7X0.5		1	●	TH1	5077431	69,50
21361-M7X0.75		1	●	TH1	5077432	57,10
21361-M8X0.5		1	●	TH1	5077433	62,60

Bezeichnung / Designation	Sorte / Grade	VE / US		Disc. Gr.	Article No.	EURO Stück / piece
21361-M8X0.75		1	●	TH1	5077434	51,70
21361-M8X1		1	●	TH1	5077435	45,30
21361-M9X0.5		1	●	TH1	5077436	91,60
21361-M9X0.75		1	●	TH1	5077437	96,20
21361-M9X1		1	●	TH1	5077438	68,60
21361-M10X0.5		1	●	TH1	5077439	83,40
21361-M10X0.75		1	●	TH1	5077440	66,20
21361-M10X1		1	●	TH1	5077441	50,80
21361-M10X1.25		1	●	TH1	5077442	60,80
21361-M11X1		1	●	TH1	5077443	80,00
21361-M12X0.5		1	●	TH1	5077444	96,10
21361-M12X0.75		1	●	TH1	5077445	77,00
21361-M12X1		1	●	TH1	5077446	56,20
21361-M12X1.25		1	●	TH1	5077447	64,40
21361-M12X1.5		1	●	TH1	5077448	56,20
21361-M14X1		1	●	TH1	5077449	75,30
21361-M14X1.25		1	●	TH1	5077450	74,40
21361-M14X1.5		1	●	TH1	5077451	73,40
21361-M15X1.5		1	●	TH1	5077452	90,40
21361-M16X1		1	●	TH1	5077453	82,50
21361-M16X1.5		1	●	TH1	5077454	77,00
21361-M18X1		1	●	TH1	5077455	112,00
21361-M18X1.5		1	●	TH1	5077456	89,80
21361-M18X2		1	●	TH1	5077457	103,00
21361-M20X1		1	●	TH1	5077458	124,00
21361-M20X1.5		1	●	TH1	5077459	112,00
21361-M20X2		1	●	TH1	5077460	154,00
21361-M22X1		1	●	TH1	5077461	177,00
21361-M22X1.5		1	●	TH1	5077462	120,00
21361-M22X2		1	●	TH1	5077463	168,00
21361-M24X1		1	●	TH1	5077464	188,00
21361-M24X1.5		1	●	TH1	5077465	131,00
21361-M24X2		1	●	TH1	5077466	151,00
21361-M25X1.5		1	●	TH1	5077467	236,00
21361-M26X1.5		1	●	TH1	5077468	170,00
21361-M27X1		1	●	TH1	5077469	254,00
21361-M27X1.5		1	●	TH1	5077470	203,00
21361-M27X2		1	●	TH1	5077471	210,00
21361-M28X1.5		1	●	TH1	5077472	207,00
21361-M28X2		1	●	TH1	5077473	263,00
21361-M30X1		1	●	TH1	5077474	263,00
21361-M30X1.5		1	●	TH1	5077475	214,00
21361-M30X2		1	●	TH1	5077476	238,00
21361-M32X1.5		1	●	TH1	5077477	263,00
21361-M33X1.5		1	●	TH1	5077478	299,00
21361-M33X2		1	●	TH1	5077479	279,00
21361-M35X1.5		1	●	TH1	5077481	372,00
21361-M36X1.5		1	●	TH1	5077482	345,00
21361-M36X2		1	●	TH1	5077483	361,00
21361-M36X3		1	●	TH1	5077484	395,00
21361-M38X1.5		1	●	TH1	5077485	354,00
21361-M39X1.5		1	●	TH1	5077486	439,00
21361-M39X3		1	●	TH1	5077488	472,00
21361-M40X1.5		1	●	TH1	5077489	392,00
21361-M40X2		1	●	TH1	5077490	441,00
21361-M42X1.5		1	○	TH1	5077491	439,00
21361-M42X2		1	○	TH1	5077492	490,00
21361-M42X3		1	○	TH1	5077493	544,00
21361-M45X1.5		1	○	TH1	5077494	481,00
21361-M45X2		1	○	TH1	5077495	571,00
21361-M45X3		1	○	TH1	5077496	617,00
21361-M48X1.5		1	○	TH1	5077497	571,00
21361-M48X2		1	○	TH1	5077498	680,00
21361-M48X3		1	○	TH1	5077499	707,00
21361-M50X1.5		1	○	TH1	5077500	626,00
21361-M52X1.5		1	○	TH1	5077502	698,00
21361-M52X2		1	○	TH1	5077503	798,00
21361-M52X3		1	○	TH1	5077504	853,00
213614-M12X1.5		1	●	TH4	5077525	61,10
213614-M14X1.5		1	●	TH4	5077526	78,60

Bezeichnung / Designation	Sorte / Grade	VE / US		Disc. Gr.	Article No.	EURO Stück / piece
213614-M16X1.5		1	●	TH4	5077527	85,40
213614-M18X1.5		1	○	TH4	5077528	102,00
213614-M20X1.5		1	●	TH4	5077529	127,00
213614-M22X1.5		1	●	TH4	5077530	136,00
21368-M4X0.5		1	●	TH4	5077558	65,00
21368-M5X0.5		1	●	TH4	5077559	88,30
21368-M6X0.5		1	●	TH4	5077560	84,40
21368-M6X0.75		1	●	TH4	5077561	74,70
21368-M8X0.5		1	●	TH4	5077562	85,40
21368-M8X0.75		1	●	TH4	5077563	86,40
21368-M8X1		1	●	TH4	5077564	57,20
21368-M10X0.75		1	●	TH4	5077565	89,20
21368-M10X1		1	●	TH4	5077566	64,00
21368-M12X1		1	●	TH4	5077567	88,30
21368-M12X1.5		1	●	TH4	5077568	92,20
21368-M14X1		1	●	TH4	5077569	116,00
21368-M14X1.5		1	●	TH4	5077570	96,00
21368-M16X1		1	●	TH4	5077571	113,00
21368-M16X1.5		1	●	TH4	5077572	108,00
21368-M18X1.5		1	●	TH4	5077573	125,00
21368-M20X1.5		1	●	TH4	5077574	144,00
21368-M22X1.5		1	●	TH4	5077575	178,00
21368-M24X1.5		1	●	TH4	5077576	181,00
21410-M4X0.5		1	●	TH1	5077610	50,80
21410-M5X0.5		1	●	TH1	5077611	51,70
21410-M6X0.5		1	●	TH1	5077612	52,60
21410-M6X0.75		1	●	TH1	5077613	54,40
214101-M8X1		1	●	TH4	5077617	82,20
214101-M10X1		1	●	TH4	5077618	97,10
214101-M10X1.25		1	■	TH4	5077619*	107,00
214101-M12X1.25		1	●	TH4	5077620	126,00
214101-M12X1.5		1	●	TH4	5077622	123,00
21416-M8X0.75		1	●	TH4	5077624	96,00
21416-M8X1		1	●	TH4	5077625	72,70
21416-M10X1		1	●	TH4	5077626	74,70
2141663-M6X0.75	ACN	1	●	TH4	5664609	99,50
2141663-M8X0.75	ACN	1	●	TH4	5664610	119,00
2141663-M8X1	ACN	1	●	TH4	5664611	104,00
2141663-M10X1	ACN	1	●	TH4	5664612	123,00
21460-M8X0.75		1	●	TH1	5077627	56,20
21460-M8X1		1	●	TH1	5077628	51,70
21460-M10X1		1	●	TH1	5077629	52,60
21460-M10X1.25		1	●	TH1	5077633	63,30
21460-M12X1		1	●	TH1	5077630	65,30
21460-M12X1.25		1	●	TH1	5077634	69,90
21460-M12X1.5		1	●	TH1	5077631	62,60
21460-M14X1		1	●	TH1	5077632	88,00
21460-M14X1.25		1	●	TH1	5077635	90,40
21460-M14X1.5		1	●	TH1	5077636	87,60
21460-M16X1		1	●	TH1	5077637	101,00
21460-M16X1.5		1	●	TH1	5077638	98,90
21460-M18X1.5		1	●	TH1	5077639	132,00
21460-M20X1.5		1	●	TH1	5077640	127,00
21460-M20X2		1	●	TH1	5077647	183,00
21460-M22X1.5		1	●	TH1	5077641	150,00
21460-M24X1.5		1	●	TH1	5077642	159,00
21460-M24X2		1	●	TH1	5077648	183,00
21460-M26X1.5		1	●	TH1	5077643	225,00
21460-M27X1.5		1	●	TH1	5077644	236,00
21460-M27X2		1	●	TH1	5077649	242,00
21460-M28X1.5		1	●	TH1	5077645	258,00
21460-M30X1.5		1	●	TH1	5077646	265,00
21460-M30X2		1	●	TH1	5077650	281,00
21460-M36X1.5		1	●	TH1	5077653	361,00
2146005-M8X0.75	TIN	1	●	TH1	5077654	85,40
2146005-M8X1	TIN	1	●	TH1	5077655	83,20
2146005-M10X1	TIN	1	●	TH1	5077656	87,10
2146005-M12X1	TIN	1	●	TH1	5077657	105,00
2146005-M12X1.5	TIN	1	●	TH1	5077658	101,00
2146005-M14X1.5	TIN	1	●	TH1	5077659	133,00

Bezeichnung / Designation	Sorte / Grade	VE / US		Disc. Gr.	Article No.	EURO Stück / piece
2146005-M16X1.5	TIN	1	●	TH1	5077660	**144,00**
2146005-M18X1.5	TIN	1	●	TH1	5077661	**200,00**
2146005-M20X1.5	TIN	1	●	TH1	5077662	**222,00**
2146005-M22X1.5	TIN	1	●	TH1	5077663	**247,00**
2146005-M24X1.5	TIN	1	●	TH1	5077664	**274,00**
2146006-M8X1	TICN	1	●	TH1	5077665	**85,20**
2146006-M10X1	TICN	1	●	TH1	5077666	**92,50**
2146006-M12X1	TICN	1	●	TH1	5077667	**107,00**
2146006-M12X1.5	TICN	1	●	TH1	5077668	**104,00**
2146006-M14X1.5	TICN	1	●	TH1	5077669	**136,00**
2146006-M16X1.5	TICN	1	●	TH1	5077670	**153,00**
2146006-M18X1.5	TICN	1	●	TH1	5077671	**206,00**
2146006-M20X1.5	TICN	1	●	TH1	5077672	**237,00**
21460T2-M12X1.5	THL	1	●	TH5	6692128	**168,00**
21460T2-M14X1.5	THL	1	●	TH5	6692129	**202,00**
21460T2-M16X1.5	THL	1	●	TH5	6692230	**227,00**
21460TR-M12X1.5		1	●	TH5	6382836	**168,00**
21460TR-M16X1.5		1	●	TH5	6382838	**227,00**
21466-M8X1		1	●	TH4	5077684	**72,70**
21466-M10X1		1	●	TH4	5077685	**74,70**
21466-M10X1.25		1	●	TH4	5077687	**85,50**
21466-M12X1		1	●	TH4	5077686	**93,10**
21466-M12X1.25		1	●	TH4	5077688	**102,00**
21466-M12X1.5		1	●	TH4	5077689	**91,20**
21466-M14X1		1	●	TH4	5077690	**127,00**
21466-M14X1.5		1	●	TH4	5077691	**126,00**
21466-M16X1		1	●	TH4	5077692	**150,00**
2146663-M12X1.5	ACN	1	●	TH4	5664614	**141,00**
2146663-M14X1.5	ACN	1	●	TH4	5664615	**185,00**
21480-M4X0.5		1	●	TH4	5077700	**58,80**
21480-M5X0.5		1	●	TH4	5077701	**64,00**
21480-M6X0.5		1	●	TH4	5077702	**65,00**
21480-M6X0.75		1	●	TH4	5077703	**66,00**
21480-M8X0.75		1	●	TH4	5077704	**64,00**
21480-M8X1		1	●	TH4	5077705	**64,00**
21480-M10X1		1	●	TH4	5077706	**65,00**
21480-M12X1		1	●	TH4	5077707	**79,50**
21480-M12X1.5		1	●	TH4	5077708	**78,60**
21480-M14X1.5		1	●	TH4	5077709	**109,00**
21480-M16X1.5		1	●	TH4	5077710	**117,00**
21480-M18X1.5		1	●	TH4	5077711	**152,00**
21480-M20X1.5		1	●	TH4	5077712	**152,00**
21480-M22X1.5		1	●	TH4	5077713	**179,00**
2148005-M8X1	TIN	1	●	TH4	5077717	**84,60**
2148005-M10X1	TIN	1	●	TH4	5077718	**88,00**
2148005-M12X1	TIN	1	●	TH4	5077719	**105,00**
2148005-M12X1.5	TIN	1	●	TH4	5077720	**104,00**
2148005-M14X1.5	TIN	1	●	TH4	5077721	**134,00**
2148005-M16X1.5	TIN	1	●	TH4	5077722	**142,00**
2156062-M8X1	THL	1	●	TH4	5101529	**89,00**
2156062-M10X1	THL	1	●	TH4	5077764	**92,90**
2156062-M12X1.5	THL	1	●	TH4	5077765	**107,00**
2156062-M14X1.5	THL	1	●	TH4	5077766	**134,00**
2156062-M16X1.5	THL	1	●	TH4	5077767	**153,00**
2156062-M18X1.5	THL	1	●	TH4	5077768	**196,00**
2156315-M10X1	TIN	1	●	TH4	5077809	**97,10**
2156315-M12X1	TIN	1	●	TH4	5077810	**115,00**
2156315-M12X1.5	TIN	1	●	TH4	5077811	**108,00**
2156315-M14X1.5	TIN	1	●	TH4	5077812	**128,00**
2156315-M16X1.5	TIN	1	●	TH4	5077813	**149,00**
2156315-M18X1.5	TIN	1	●	TH4	5077814	**194,00**
2156315-M20X1.5	TIN	1	●	TH4	5077815	**239,00**
2156315-M22X1.5	TIN	1	●	TH4	5077816	**270,00**
2156315-M24X1.5	TIN	1	●	TH4	5077817	**289,00**
22207-UNC2		1	●	TH4	5077992	**66,30**
22207-UNC4		1	●	TH4	5077995	**54,50**
22207-UNC5		1	○	TH4	5077996	**53,50**
22207-UNC6		1	●	TH4	5077998	**49,40**
22207-UNC8		1	●	TH4	5077999	**48,40**
22207-UNC10		1	●	TH4	5078000	**51,90**

Bezeichnung / Designation	Sorte / Grade	VE / US		Disc. Gr.	Article No.	EURO Stück / piece
22207-UNC1/4		1	●	TH4	5077991	**57,00**
22207-UNC5/16		1	●	TH4	5077997	**63,10**
22207-UNC3/8		1	●	TH4	5077994	**75,40**
2220706-UNC2	TICN	1	●	TH4	7511552	**91,10**
2220706-UNC6	TICN	1	●	TH4	7511556	**67,90**
2220706-UNC8	TICN	1	●	TH4	7511557	**66,50**
2220706-UNC10	TICN	1	●	TH4	7511551	**71,40**
2220706-UNC1/4	TICN	1	■	TH4	7511550*	**78,40**
2220706-UNC5/16	TICN	1	●	TH4	7511555	**86,80**
2220706-UNC3/8	TICN	1	●	TH4	7511553	**104,00**
222079-EGUNC4		1	●	TH4	5078002	**70,40**
222079-EGUNC6		1	●	TH4	5078003	**64,20**
222079-EGUNC8		1	●	TH4	5078004	**63,10**
22217-UNC2		1	●	TH4	5078034	**63,10**
22217-UNC4		1	●	TH4	5078037	**51,90**
22217-UNC5		1	●	TH4	5078038	**50,90**
22217-UNC6		1	●	TH4	5078040	**47,00**
22217-UNC8		1	●	TH4	5078041	**46,10**
22217-UNC10		1	●	TH4	5078042	**49,40**
22217-UNC1/4		1	●	TH4	5078033	**54,30**
22217-UNC5/16		1	●	TH4	5078039	**60,10**
22217-UNC3/8		1	●	TH4	5078036	**71,80**
2221706-UNC2	TICN	1	●	TH4	7511563	**86,80**
2221706-UNC4	TICN	1	●	TH4	7511565	**71,40**
2221706-UNC5	TICN	1	●	TH4	7511566	**70,00**
2221706-UNC6	TICN	1	●	TH4	7511568	**64,70**
2221706-UNC8	TICN	1	●	TH4	7511569	**63,30**
2221706-UNC10	TICN	1	●	TH4	7511562	**68,00**
2221706-UNC1/4	TICN	1	●	TH4	7511561	**74,70**
2221706-UNC5/16	TICN	1	●	TH4	7511567	**82,70**
2221706-UNC3/8	TICN	1	●	TH4	7511564	**98,70**
22257-UNC7/16		1	○	TH4	5078047	**93,70**
22257-UNC1/2		1	●	TH4	5078044	**97,80**
22257-UNC5/8		1	○	TH4	5078046	**127,00**
22257-UNC3/4		1	○	TH4	5078045	**166,00**
22267-UNC7/16		1	●	TH4	5078063	**89,20**
22267-UNC1/2		1	●	TH4	5078060	**93,10**
22267-UNC9/16		1	●	TH4	5078064	**142,00**
22267-UNC5/8		1	●	TH4	5078062	**121,00**
22267-UNC3/4		1	●	TH4	5078061	**158,00**
2226706-UNC7/16	TICN	1	●	TH4	7511573	**123,00**
2226706-UNC1/2	TICN	1	●	TH4	7511570	**128,00**
2226706-UNC9/16	TICN	1	●	TH4	7511574	**195,00**
2226706-UNC5/8	TICN	1	●	TH4	7511572	**167,00**
2226706-UNC3/4	TICN	1	●	TH4	7511571	**217,00**
22400-UNC2		1	○	TH1	5078142	**56,80**
22400-UNC4		1	●	TH1	5078145	**47,30**
22400-UNC6		1	●	TH1	5078148	**42,80**
22400-UNC8		1	●	TH1	5078149	**42,80**
22400-UNC1/4		1	○	TH1	5078141	**51,40**
22400-UNC5/16		1	○	TH1	5078147	**49,50**
22400-UNC3/8		1	○	TH1	5078144	**59,00**
224069-EGUNC4		1	●	TH4	5078152	**72,60**
224069-EGUNC6		1	●	TH4	5078153	**66,20**
224069-EGUNC8		1	●	TH4	5078154	**67,20**
22410-UNC1		1	●	TH1	5078157	**58,10**
22410-UNC2		1	●	TH1	5078159	**48,60**
22410-UNC4		1	●	TH1	5078162	**40,50**
22410-UNC6		1	●	TH1	5078165	**36,70**
22410-UNC8		1	●	TH1	5078166	**36,70**
22410-UNC10		1	●	TH1	5078167	**39,40**
22410-UNC12		1	●	TH1	5078168	**47,60**
22410-UNC1/4		1	●	TH1	5078158	**44,00**
22410-UNC5/16		1	●	TH1	5078164	**46,30**
22410-UNC3/8		1	●	TH1	5078161	**51,70**
224101-UNJC4		1	●	TH4	5078171	**99,30**
224101-UNJC6		1	●	TH4	5078173	**86,40**
224101-UNJC8		1	●	TH4	5078174	**93,80**
224101-UNJC10		1	●	TH4	5078175	**99,30**
224101-UNJC1/4		1	●	TH4	5078169	**103,00**

Bezeichnung / Designation	Sorte / Grade	VE / US		Disc. Gr.	Article No.	EURO Stück / piece
224101-UNJC5/16		1	●	TH4	5078172	121,00
224101-UNJC3/8		1	●	TH4	5078170	131,00
224102-UNC2		1	●	TH4	5078177	64,20
224102-UNC3		1	●	TH4	5078178	61,10
224102-UNC4		1	●	TH4	5078180	53,90
224102-UNC6		1	●	TH4	5078183	49,40
224102-UNC8		1	●	TH4	5078184	49,40
224102-UNC10		1	●	TH4	5078185	51,40
224102-UNC1/4		1	●	TH4	5078176	60,10
224102-UNC5/16		1	●	TH4	5078182	63,00
224102-UNC3/8		1	●	TH4	5078179	74,70
22410206-UNC4	TICN	1	●	TH4	7513064	74,20
22410206-UNC5	TICN	1	●	TH4	7513065	74,20
22410206-UNC8	TICN	1	●	TH4	7513068	68,00
22410206-UNC10	TICN	1	●	TH4	7513060	70,70
22410206-UNC1/4	TICN	1	●	TH4	7513059	82,70
22410206-UNC5/16	TICN	1	●	TH4	7513066	86,70
22410206-UNC3/8	TICN	1	●	TH4	7513063	103,00
224104-UNC2		1	●	TH4	5078187	76,80
224104-UNC4		1	●	TH4	5078190	65,10
224104-UNC6		1	○	TH4	5078193	57,00
224104-UNC8		1	○	TH4	5078194	59,10
224104-UNC1/4		1	○	TH4	5078186	67,20
224104-UNC5/16		1	●	TH4	5078192	79,40
224104-UNC3/8		1	●	TH4	5078189	82,50
22416-UNC6		1	●	TH4	5078200	48,50
22416-UNC8		1	●	TH4	5078201	49,40
22416-UNC10		1	●	TH4	5078202	51,40
22416-UNC12		1	●	TH4	5078203	66,20
22416-UNC1/4		1	●	TH4	5078196	58,20
22416-UNC5/16		1	●	TH4	5078199	63,00
22416-UNC3/8		1	●	TH4	5078197	72,70
224164-UNC6		1	●	TH4	5078208	56,00
224164-UNC8		1	●	TH4	5078209	58,00
224164-UNC10		1	○	TH4	5078210	62,10
224164-UNC1/4		1	●	TH4	5078204	67,20
224164-UNC5/16		1	○	TH4	5078207	77,40
224164-UNC3/8		1	●	TH4	5078205	82,50
22450-UNC1/2		1	○	TH1	5078212	85,70
22450-UNC5/8		1	○	TH1	5078216	100,00
22450-UNC3/4		1	○	TH1	5078213	123,00
22460-UNC7/16		1	●	TH1	5078225	70,70
22460-UNC1/2		1	●	TH1	5078220	72,50
22460-UNC5/8		1	●	TH1	5078224	95,20
22460-UNC3/4		1	●	TH1	5078221	117,00
22460-UNC7/8		1	●	TH1	5078226	156,00
22460-UNC1		1	●	TH1	5078219	199,00
224602-UNC7/16		1	■	TH4	5078230*	102,00
224602-UNC1/2		1	●	TH4	5078227	101,00
224602-UNC5/8		1	●	TH4	5078229	138,00
224602-UNC3/4		1	●	TH4	5078228	171,00
22460206-UNC1/2	TICN	1	●	TH4	7513069	139,00
22460206-UNC5/8	TICN	1	●	TH4	7513071	189,00
22460206-UNC3/4	TICN	1	●	TH4	7513070	235,00
224604-UNC7/16		1	■	TH4	5078235*	121,00
224604-UNC1/2		1	●	TH4	5078232	119,00
224604-UNC9/16		1	●	TH4	5078236	166,00
224604-UNC3/4		1	○	TH4	5078233	194,00
22466-UNC7/16		1	●	TH4	5078239	97,00
22466-UNC1/2		1	●	TH4	5078237	98,90
22466-UNC5/8		1	●	TH4	5078238	134,00
224664-UNC7/16		1	○	TH4	5078242	111,00
224664-UNC1/2		1	●	TH4	5078240	112,00
23207-UNF4		1	●	TH4	5078422	72,60
23207-UNF5		1	●	TH4	5078423	69,40
23207-UNF6		1	●	TH4	5078425	64,20
23207-UNF10		1	●	TH4	5078427	66,20
23207-UNF1/4		1	●	TH4	5078420	74,30
23207-UNF5/16		1	●	TH4	5078424	84,50
23207-UNF3/8		1	●	TH4	5078421	90,70

Bezeichnung / Designation	Sorte / Grade	VE / US		Disc. Gr.	Article No.	EURO Stück / piece
2320706-UNF10	TICN	1	●	TH4	7511576	91,00
2320706-UNF1/4	TICN	1	●	TH4	7511575	102,00
2320706-UNF5/16	TICN	1	●	TH4	7511580	116,00
2320706-UNF3/8	TICN	1	●	TH4	7511577	125,00
2320763-UNJF10	ACN	1	●	TH4	5344192	92,80
2320763-UNJF1/4	ACN	1	●	TH4	5344193	104,00
2320763-UNJF5/16	ACN	1	●	TH4	5344194	119,00
2320763-UNJF3/8	ACN	1	●	TH4	5344195	127,00
232079-EGUNF10		1	●	TH4	5078431	76,40
232079-EGUNF1/4		1	●	TH4	5078429	85,50
232079-EGUNF5/16		1	●	TH4	5078430	98,80
23217-UNF5		1	○	TH4	5078457	72,80
23217-UNF6		1	■	TH4	5078459*	67,30
23217-UNF10		1	●	TH4	5078462	69,50
23217-UNF1/4		1	●	TH4	5078454	78,00
23217-UNF5/16		1	●	TH4	5078458	88,70
23217-UNF3/8		1	●	TH4	5078455	95,20
2321706-UNF5	TICN	1	●	TH4	7511589	100,00
2321706-UNF10	TICN	1	■	TH4	7511587*	95,60
2321706-UNF1/4	TICN	1	●	TH4	7511586	107,00
2321706-UNF5/16	TICN	1	●	TH4	7511590	122,00
2321706-UNF3/8	TICN	1	●	TH4	7511588	131,00
23257-UNF7/16		1	●	TH4	5078466	118,00
23257-UNF1/2		1	●	TH4	5078464	108,00
23257-UNF5/8		1	●	TH4	5078465	153,00
2325706-UNF7/16	TICN	1	●	TH4	7511585	162,00
2325706-UNF1/2	TICN	1	●	TH4	7511583	148,00
2325706-UNF5/8	TICN	1	●	TH4	7511584	210,00
232579-EGUNF3/8		1	●	TH4	5078467	106,00
23267-UNF7/16		1	●	TH4	5078483	124,00
23267-UNF1/2		1	●	TH4	5078481	113,00
23267-UNF5/8		1	●	TH4	5078482	160,00
2326706-UNF7/16	TICN	1	●	TH4	7511594	171,00
2326706-UNF1/2	TICN	1	●	TH4	7511592	156,00
2326706-UNF5/8	TICN	1	●	TH4	7511593	221,00
23400-UNF0		1	○	TH1	5078558	70,00
23400-UNF4		1	○	TH1	5078563	52,80
23400-UNF8		1	○	TH1	5078567	49,50
23400-UNF10		1	●	TH1	5078568	52,40
23400-UNF12		1	●	TH1	5078569	64,80
23400-UNF1/4		1	●	TH1	5078560	55,20
23400-UNF5/16		1	●	TH1	5078565	61,90
23400-UNF3/8		1	○	TH1	5078562	62,80
2340663-UNJF10	ACN	1	●	TH4	5344188	85,70
2340663-UNJF1/4	ACN	1	●	TH4	5344189	96,60
2340663-UNJF5/16	ACN	1	●	TH4	5344190	103,00
2340663-UNJF3/8	ACN	1	●	TH4	5344191	110,00
234069-EGUNF10		1	●	TH4	5078572	83,50
234069-EGUNF1/4		1	●	TH4	5078570	94,70
234069-EGUNF5/16		1	●	TH4	5078571	101,00
234079-EGUNF10		1	●	TH4	5078574	83,50
234079-EGUNF1/4		1	●	TH4	5078573	97,80
234079-EGUNF5/16		1	●	TH4	5078575	103,00
23410-UNF0		1	●	TH1	5078576	66,70
23410-UNF1		1	●	TH1	5078577	60,00
23410-UNF2		1	●	TH1	5078579	67,60
23410-UNF4		1	●	TH1	5078581	45,70
23410-UNF8		1	■	TH1	5078585*	43,10
23410-UNF10		1	●	TH1	5078586	45,30
23410-UNF12		1	●	TH1	5078587	53,30
23410-UNF1/4		1	●	TH1	5078578	48,10
23410-UNF5/16		1	●	TH1	5078583	51,70
23410-UNF3/8		1	●	TH1	5078580	57,10
234101-UNJF6		1	●	TH4	5078591	95,60
234101-UNJF8		1	●	TH4	5078592	95,60
234101-UNJF10		1	●	TH4	5078593	101,00
234101-UNJF1/4		1	●	TH4	5078588	118,00
234101-UNJF5/16		1	●	TH4	5078590	125,00
234101-UNJF3/8		1	●	TH4	5078589	131,00
234104-UNF8		1	●	TH4	5078601	67,20

Bezeichnung / Designation	Sorte / Grade	VE / US		Disc. Gr.	Article No.	EURO Stück / piece
234104-UNF10		1	●	TH4	5078602	72,30
234104-UNF12		1	●	TH4	5078603	90,70
234104-UNF1/4		1	●	TH4	5078597	82,50
234104-UNF5/16		1	●	TH4	5078599	87,60
234104-UNF3/8		1	●	TH4	5078598	91,70
23410406-UNF8	TICN	1	●	TH4	7513079	92,50
23410406-UNF10	TICN	1	●	TH4	7513074	99,40
23410406-UNF1/4	TICN	1	●	TH4	7513073	113,00
23410406-UNF5/16	TICN	1	●	TH4	7513077	120,00
23410406-UNF3/8	TICN	1	●	TH4	7513076	126,00
23416-UNF6		1	●	TH4	5078607	55,30
23416-UNF10		1	●	TH4	5078609	61,10
23416-UNF1/4		1	●	TH4	5078604	68,80
23416-UNF5/16		1	●	TH4	5078606	73,70
23416-UNF3/8		1	●	TH4	5078605	78,60
234164-UNF10		1	●	TH4	5078616	70,30
234164-UNF1/4		1	●	TH4	5078611	79,40
234164-UNF5/16		1	●	TH4	5078613	86,60
234164-UNF3/8		1	●	TH4	5078612	90,70
23450-UNF5/16		1	○	TH1	5078622	62,80
23450-UNF3/8		1	●	TH1	5078621	63,80
23450-UNF7/16		1	○	TH1	5078624	82,80
23450-UNF1/2		1	●	TH1	5078619	81,90
23450-UNF9/16		1	●	TH1	5078626	112,00
23450-UNF3/4		1	○	TH1	5078620	133,00
23450-UNF7/8		1	●	TH1	5078625	170,00
234569-EGUNF3/8		1	●	TH4	5078627	107,00
234579-EGUNF3/8		1	■	TH4	5078628*	107,00
23460-UNF5/16		1	●	TH1	5078633	51,70
23460-UNF3/8		1	●	TH1	5078632	57,10
23460-UNF7/16		1	●	TH1	5078635	72,50
23460-UNF1/2		1	●	TH1	5078630	70,70
23460-UNF9/16		1	●	TH1	5078637	107,00
23460-UNF5/8		1	●	TH1	5078634	96,10
23460-UNF3/4		1	●	TH1	5078631	127,00
23460-UNF7/8		1	●	TH1	5078636	162,00
234604-UNF7/16		1	●	TH4	5078640	126,00
234604-UNF1/2		1	●	TH4	5078638	120,00
234604-UNF5/8		1	●	TH4	5078639	163,00
23460406-UNF7/16	TICN	1	●	TH4	7513082	174,00
23460406-UNF1/2	TICN	1	■	TH4	7513080*	165,00
23460406-UNF5/8	TICN	1	●	TH4	7513081	224,00
23466-UNF7/16		1	●	TH4	5078643	98,90
23466-UNF1/2		1	●	TH4	5078641	102,00
23466-UNF5/8		1	●	TH4	5078642	135,00
234664-UNF7/16		1	●	TH4	5078646	117,00
234664-UNF1/2		1	○	TH4	5078644	118,00
234664-UNF5/8		1	○	TH4	5078645	161,00
24165-G1/8		1	●	TH1	5078780	46,30
24165-G1/4		1	●	TH1	5078779	63,50
24165-G3/8		1	●	TH1	5078782	81,60
24165-G1/2		1	●	TH1	5078778	106,00
24165-G3/4		1	●	TH1	5078781	172,00
24165-G1		1	●	TH1	5078777	243,00
24167-RC1/8		1	●	TH1	5078788	82,80
24167-RC1/4		1	●	TH1	5078787	86,70
24167-RC3/8		1	●	TH1	5078790	119,00
24167-RC1/2		1	●	TH1	5078786	149,00
24167-RC3/4		1	●	TH1	5078789	223,00
24167-RC1		1	●	TH1	5078785	324,00
24167-RC1.1/4		1	●	TH1	5078792	490,00
24167-RC1.1/2		1	●	TH1	5078791	653,00
24195-G1/8		1	●	TH1	5078795	46,30
24195-G1/4		1	●	TH1	5078794	63,50
24195-G3/8		1	●	TH1	5078797	81,60
24195-G1/2		1	●	TH1	5078793	106,00
24195-G3/4		1	●	TH1	5078796	172,00
24361-G1/8		1	●	TH1	5078836	38,10
24361-G1/4		1	●	TH1	5078835	63,50
24361-G3/8		1	●	TH1	5078839	79,80

Bezeichnung / Designation	Sorte / Grade	VE / US		Disc. Gr.	Article No.	EURO Stück / piece
24361-G1/2		1	●	TH1	5078834	109,00
24361-G5/8		1	●	TH1	5078840	136,00
24361-G3/4		1	●	TH1	5078838	168,00
24361-G1		1	●	TH1	5078833	258,00
24361-G1.1/4		1	●	TH1	5078843	424,00
24361-G1.1/2		1	●	TH1	5078842	571,00
24361-G2		1	●	TH1	5078837	880,00
24361-G2.1/2		1	●	TH1	5078846	1.306,00
243612-RP1/8		1	●	TH1	5078850	50,80
243612-RP1/4		1	●	TH1	5078849	70,70
243612-RP3/8		1	●	TH1	5078853	88,90
243612-RP1/2		1	●	TH1	5078848	118,00
243612-RP3/4		1	●	TH1	5078852	190,00
243612-RP1		1	●	TH1	5078847	272,00
243612-RP1.1/2		1	●	TH1	5078854	626,00
24460-G1/8		1	●	TH1	5078879	58,90
24460-G1/4		1	●	TH1	5078878	80,70
24460-G3/8		1	●	TH1	5078881	98,90
24460-G1/2		1	●	TH1	5078877	127,00
24460-G3/4		1	●	TH1	5078880	201,00
24460-G1		1	●	TH1	5078876	319,00
245606-G1/8		1	●	TH4	5078884	79,10
245606-G1/4		1	●	TH4	5078883	107,00
245606-G3/8		1	●	TH4	5078885	136,00
245606-G1/2		1	●	TH4	5078882	185,00
2456062-G1/8	THL	1	●	TH4	5078886	96,60
2456062-G1/4	THL	1	●	TH4	5078887	130,00
2456062-G3/8	THL	1	●	TH4	5078888	170,00
2456062-G1/2	THL	1	●	TH4	5078889	242,00
2456315-G1/4	TIN	1	●	TH4	5078911	121,00
2456315-G3/8	TIN	1	●	TH4	5078913	163,00
2456315-G1/2	TIN	1	●	TH4	5078910	225,00
2456315-G3/4	TIN	1	●	TH4	5078912	321,00
25167-NPT1/16		1	●	TH1	5078945	58,90
25167-NPT1/8		1	●	TH1	5078948	66,20
25167-NPT1/4		1	●	TH1	5078947	78,90
25167-NPT3/8		1	●	TH1	5078951	94,40
25167-NPT1/2		1	●	TH1	5078946	128,00
25167-NPT3/4		1	●	TH1	5078950	170,00
25167-NPT1		1	●	TH1	5078944	247,00
25167-NPT1.1/4		1	●	TH1	5078953	408,00
25167-NPT1.1/2		1	●	TH1	5078952	517,00
25167-NPT2		1	●	TH1	5078949	771,00
25460-NPT1/16	VAP	1	●	TH4	5078961	103,00
25460-NPT1/8	VAP	1	●	TH4	5078964	112,00
25460-NPT1/4	VAP	1	●	TH4	5078963	135,00
25460-NPT3/8	VAP	1	●	TH4	5078966	145,00
25460-NPT1/2	VAP	1	●	TH4	5078962	217,00
25460-NPT3/4	VAP	1	●	TH4	5078965	289,00
25460-NPT1	VAP	1	●	TH4	5078960	417,00
25467-NPT1/16		1	●	TH4	5078968	102,00
25467-NPT1/8		1	●	TH4	5078971	111,00
25467-NPT1/4		1	●	TH4	5078970	134,00
25467-NPT3/8		1	●	TH4	5078973	159,00
25467-NPT1/2		1	●	TH4	5078969	215,00
25467-NPT3/4		1	●	TH4	5078972	287,00
25467-NPT1		1	●	TH4	5078967	413,00
2546706-NPT1/16	TICN	1	●	TH4	7513084	140,00
2546706-NPT1/8	TICN	1	●	TH4	7513087	152,00
2546706-NPT1/4	TICN	1	●	TH4	7513086	184,00
2546706-NPT3/8	TICN	1	●	TH4	7513089	219,00
2546706-NPT1/2	TICN	1	●	TH4	7513085	296,00
2546706-NPT3/4	TICN	1	●	TH4	7513088	395,00
2546706-NPT1	TICN	1	●	TH4	7513083	568,00
255630-NPT1/8		1	●	TH4	5101572	111,00
255630-NPT1/4		1	●	TH4	5101571	134,00
255630-NPT3/8		1	●	TH4	5101573	159,00
255630-NPT1/2		1	●	TH4	5101570	215,00
25567-NPT1/16	VAP	1	●	TH4	5078975	102,00
25567-NPT1/8	VAP	1	●	TH4	5078978	111,00

Bezeichnung / Designation	Sorte / Grade	VE / US		Disc. Gr.	Article No.	EURO Stück / piece
25567-NPT1/4	VAP	1	●	TH4	5078977	134,00
25567-NPT3/8	VAP	1	●	TH4	5078980	159,00
25567-NPT1/2	VAP	1	●	TH4	5078976	215,00
25567-NPT3/4	VAP	1	●	TH4	5078979	287,00
25567-NPT1	VAP	1	●	TH4	5078974	413,00
2556702-NPT1/8	THL	1	●	TH4	5078983	140,00
2556702-NPT1/4	THL	1	●	TH4	5078984	172,00
2556702-NPT3/8	THL	1	●	TH4	5078985	213,00
2556702-NPT1/2	THL	1	●	TH4	5078986	299,00
26167-NPTF1/16		1	●	TH1	5078988	70,70
26167-NPTF1/8		1	●	TH1	5078991	75,30
26167-NPTF1/4		1	●	TH1	5078990	90,70
26167-NPTF3/8		1	●	TH1	5078993	112,00
26167-NPTF1/2		1	●	TH1	5078989	145,00
26167-NPTF3/4		1	●	TH1	5078992	198,00
26167-NPTF1		1	●	TH1	5078987	279,00
26460-NPTF1/16	VAP	1	●	TH4	5078996	122,00
26460-NPTF1/8	VAP	1	●	TH4	5078999	128,00
26460-NPTF1/4	VAP	1	●	TH4	5078998	152,00
26460-NPTF3/8	VAP	1	●	TH4	5079001	192,00
26460-NPTF1/2	VAP	1	●	TH4	5078997	250,00
26460-NPTF3/4	VAP	1	●	TH4	5079000	341,00
26567-NPTF1/16	VAP	1	●	TH4	5079004	121,00
26567-NPTF1/8	VAP	1	●	TH4	5079007	126,00
26567-NPTF1/4	VAP	1	●	TH4	5079006	151,00
26567-NPTF1/2	VAP	1	●	TH4	5079005	248,00
27160-PG7		1	●	TH1	5079027	85,20
27160-PG9		1	●	TH1	5079028	104,00
27160-PG11		1	●	TH1	5079029	127,00
27160-PG13.5		1	●	TH1	5079030	133,00
27160-PG16		1	●	TH1	5079031	166,00
27160-PG21		1	●	TH1	5079032	227,00
29100-TR8X1.5		1	●	TH1	5079063	569,00
29100-TR10X2		1	●	TH1	5079064	549,00
29100-TR10X3		1	●	TH1	5079065	519,00
29100-TR12X3		1	●	TH1	5079066	599,00
29100-TR14X3		1	●	TH1	5079067	678,00
29100-TR14X4		1	●	TH1	5079068	599,00
29100-TR16X4		1	●	TH1	5079069	589,00
29100-TR18X4		1	●	TH1	5079070	648,00
29100-TR20X4		1	●	TH1	5079071	678,00
29100-TR22X5		1	●	TH1	5079072	858,00
29100-TR24X5		1	●	TH1	5079073	978,00
29100-TR26X5		1	■	TH1	5079074*	988,00
29900-TR12X3		1	○	TH4	5079082	736,00
29900-TR16X4		1	○	TH4	5079084	811,00
30016-M3	NID	1	●	THS	5200417	92,40
30016-M4	NID	1	●	THS	5200415	92,40
30016-M5	NID	1	●	THS	5200418	101,00
30016-M6	NID	1	●	THS	5200416	103,00
30016-M8	NID	1	●	THS	5200419	110,00
30016-M10	NID	1	●	THS	5200420	145,00
30016-M12	NID	1	●	THS	5200421	184,00
30060-M2		1	●	THS	5079098	80,70
30060-M2.5		1	●	THS	5079101	70,70
30060-M3		1	●	THS	5079103	56,20
30060-M4		1	●	THS	5079105	56,20
30060-M5		1	●	THS	5079107	58,00
30060-M6		1	●	THS	5079108	59,90
30060-M8		1	●	THS	5079110	68,00
30060-M10		1	●	THS	5079111	85,20
30060-M12		1	●	THS	5079112	112,00
30060-M16		1	●	THS	5079114	170,00
30060-M20		1	●	THS	5079116	261,00
30060-M24		1	●	THS	5079118	348,00
30060-M30		1	●	THS	5079120	590,00
30063-M2	VAP	1	●	THS	5079123	108,00
30063-M2.5	VAP	1	●	THS	5079125	96,20
30063-M3	VAP	1	●	THS	5079126	70,70
30063-M4	VAP	1	●	THS	5079127	70,70

Bezeichnung / Designation	Sorte / Grade	VE / US		Disc. Gr.	Article No.	EURO Stück / piece
30063-M5	VAP	1	●	THS	5079128	77,10
30063-M6	VAP	1	●	THS	5079129	78,90
30063-M8	VAP	1	●	THS	5079130	85,20
30063-M10	VAP	1	●	THS	5079131	112,00
30063-M12	VAP	1	●	THS	5079132	142,00
30063-M16	VAP	1	●	THS	5079134	223,00
30063-M20	VAP	1	●	THS	5079136	343,00
30063-M24	VAP	1	●	THS	5079137	476,00
30063-M30	VAP	1	●	THS	5079139	771,00
3111 050-558		1	○	095	5038615	1,79
3111 050-610		1	○	095	5038616	2,19
3111 050-661		1	○	095	5038646	2,99
3111 050-715		1	○	095	5038647	4,72
3111 050-769		1	●	095	5892874	9,06
3113 020-304		1	●	095	5017225	2,31
3113 020-355		1	●	095	5017226	2,31
3113 020-406		1	●	095	5017227	1,79
3113 020-457		1	●	095	5017228	2,31
3113 020-509		1	●	095	5892598	2,19
3212 010-362		1	○	095	5038635	1,79
3212 010-363		1	○	095	5038636	1,79
3212 010-364		1	○	095	5038637	1,79
3212 010-414		1	○	095	5038638	1,79
3212 010-416		1	○	095	5038634	1,79
3212 010-466		1	○	095	5038639	2,46
3212 010-469		1	○	095	5038640	2,46
3212 010-521		1	●	095	5892911	3,64
3213 010-410		1	○	095	5038641	1,79
3213 010-462		1	●	095	5892873	2,31
3214 010-355		1	○	095	5038642	1,79
3214 020-204		1	○	095	5038643	1,79
3214 020-512		1	○	095	5043617	1,79
3214 040-462		1	○	095	5043613	2,19
3214 050-357		1	○	095	5043593	5,53
3214 050-407		1	○	095	5043595	5,53
3214 050-458		1	○	095	5043597	6,17
3214 050-509		1	○	095	5043600	7,29
3214 050-539		1	○	095	5043602	8,33
3214 050-559		1	○	095	5043604	10,52
3214 050-590		1	○	095	5043606	10,52
3214 050-610		1	○	095	5043608	30,10
3214 050-611		1	○	095	5043610	30,10
3421 105-015		1	●	095	5892871	1,79
3421 105-026		1	○	095	5038609	1,79
3421 105-032		1	○	095	5038610	1,79
3611 005-140		1	○	095	5038652	3,68
3611 005-180		1	○	095	5038653	9,56
3671 010-020		1	○	095	5038617	1,79
3671 010-022		1	○	095	5038618	1,79
3671 010-024		1	○	095	5038619	1,79
3671 010-114		1	○	095	5038620	1,79
3671 010-118		1	○	095	5038621	1,79
3671 010-119		1	○	095	5038622	1,79
3671 010-120		1	○	095	5038623	1,79
3671 010-124		1	○	095	5038624	1,79
3671 010-126		1	○	095	5038625	1,79
3671 010-128		1	○	095	5038626	1,79
3823 010-101		1	○	095	5038580	4,25
3823 010-122		1	○	095	5038581	3,68
3823 010-162		1	○	095	5038582	10,05
3823 010-183		1	○	095	5038583	10,37
3823 010-225		1	●	095	5892875	12,17
391.C60A-OZ 3158		1	○	095	5043612	112,00
391.C60A-OZ 3159		1	○	095	5043614	129,00
391.C60A-OZ N460		1	○	095	5043615	355,00
393.07-711 5C		1	○	095	5012485	252,00
40311-M3		1	■	TH1	5079225*	38,50
40311-M4		1	■	TH1	5079226*	38,50
40311-M5		1	■	TH1	5079227*	35,30
40311-M6		1	■	TH1	5079228*	36,30

Bezeichnung / Designation	Sorte / Grade	VE / US		Disc. Gr.	Article No.	EURO Stück / piece
40311-M8		1	■	TH1	5079229*	41,30
416.1-834		1	○	095	5038645	1,79
416.1-838		1	○	095	5043605	5,79
5252 010-01		1	○	095	5038557	286,00
5252 010-02		1	○	095	5038558	286,00
5252 010-03		1	○	095	5036853	312,00
5252 010-04		1	○	095	5038559	357,00
5252 010-05		1	●	095	5892872	376,00
5252 015-01		1	○	095	5038560	286,00
5252 015-02		1	○	095	5038561	286,00
5252 015-03		1	○	095	5038562	312,00
5253 005-01		1	○	095	5039081	327,00
5253 005-02		1	○	095	5039082	327,00
5253 005-11		1	○	095	5038592	327,00
5253 005-12		1	○	095	5038593	327,00
5253 005-15		1	○	095	5038594	327,00
5253 005-16		1	○	095	5038595	327,00
5333 025-01		1	○	095	5038570	134,00
5333 025-02		1	○	095	5038571	134,00
5333 025-03		1	○	095	5038572	143,00
5333 025-04		1	○	095	5038573	168,00
5333 025-05		1	●	095	5892878	174,00
5431 115-01		1	○	095	5038599	113,00
5431 115-02		1	○	095	5038600	76,30
5431 115-03		1	○	095	5038601	82,90
5461 100-101		1	○	095	5038657	281,00
5461 100-111		1	○	095	5038658	281,00
5461 100-121		1	○	095	5038659	309,00
5461 100-131		1	○	095	5038660	357,00
5461 100-141		1	●	095	5892912	376,00
5461 105-01		1	○	095	5038654	81,10
5461 105-02		1	○	095	5038655	80,50
5461 105-03		1	○	095	5038656	81,10
5512 063-07		1	○	095	5043624	19,29
5512 063-08		1	○	095	5043626	19,29
5512 063-09		1	○	095	5043628	21,50
5512 063-10		1	○	095	5043622	19,46
5512 067-01		1	●	095	5017229	23,29
5512 067-02		1	●	095	5017230	23,29
5512 067-03		1	●	095	5017231	23,29
5512 067-04		1	●	095	5017232	25,20
5512 068-01		1	○	095	5043581	23,29
5512 068-02		1	○	095	5043582	23,29
5512 068-03		1	○	095	5043584	23,29
5512 068-04		1	○	095	5043586	25,20
5512 068-05		1	●	095	5892660	24,30
5512 068-08		1	●	095	5892661	44,40
5512 091-01		1	○	095	5017222	12,82
5512 091-02		1	○	095	5017223	12,82
5512 091-03		1	○	095	5017224	12,82
5512 091-04		1	○	095	5043583	13,23
5512 094-05		1	○	095	5043598	36,60
5512 094-07		1	○	095	5043601	36,60
5512 096-01		1	○	095	5038602	28,90
5512 096-02		1	○	095	5038603	28,90
5512 096-03		1	○	095	5038604	28,90
5512 096-04		1	○	095	5038605	28,90
5513 020-14		1	○	095	5036753	10,52
5513 020-26		1	○	095	5038596	9,06
5514 020-02		1	○	095	5043609	10,05
5514 020-04		1	○	095	5043607	9,56
5514 042-04		1	○	095	5043603	8,00
5514 042-06		1	○	095	5045560	11,67
5519 105-01		1	○	095	5038606	51,20
5519 105-02		1	○	095	5038607	51,20
5519 105-03		1	○	095	5038608	51,20
5541 028-01		1	○	095	5038563	30,50
5541 028-02		1	○	095	5038564	25,20
5541 028-03		1	○	095	5038565	31,80
5541 030-01		1	○	095	5038588	35,50

Bezeichnung / Designation	Sorte / Grade	VE / US		Disc. Gr.	Article No.	EURO Stück / piece
5541 030-02		1	○	095	5038589	30,10
5541 030-03		1	○	095	5038590	30,10
5541 030-04		1	○	095	5038591	37,00
5541 030-05		1	●	095	5892876	40,70
5545 040-02		1	○	095	5043588	1,79
5545 040-03		1	○	095	5038611	1,79
5545 040-05		1	○	095	5038612	1,79
5545 040-06		1	○	095	5038613	1,79
5545 040-07		1	○	095	5043592	2,57
5545 040-08		1	○	095	5043594	2,57
5545 042-01		1	○	095	5038614	1,79
5546 002-01		1	○	095	5038577	56,90
5546 002-02		1	○	095	5038578	42,90
5546 002-03		1	○	095	5038579	56,90
5549 120-06		1	○	095	5038597	112,00
5549 120-07		1	○	095	5036854	121,00
5549 120-08		1	○	095	5038598	112,00
5552 032-01		1	○	095	5038554	15,06
5552 032-02		1	○	095	5038555	13,67
5552 032-03		1	○	095	5038556	15,06
5552 061-05		1	○	095	5038648	18,98
5552 061-06		1	●	095	5892910	21,50
5552 061-07		1	○	095	5038649	15,74
5552 061-08		1	○	095	5038650	13,23
5552 061-09		1	○	095	5038651	11,67
5552 063-03		1	○	095	5038630	44,70
5552 063-04		1	●	095	5892879	55,90
5552 063-05		1	○	095	5038631	20,41
5552 063-06		1	○	095	5038632	22,96
5552 063-07		1	○	095	5038633	20,41
5561 001-41		1	○	095	5053151	2,31
5561 001-52		1	○	095	5038574	2,57
5561 001-53		1	○	095	5038575	1,79
5561 001-54		1	○	095	5038576	3,21
5561 001-71		1	○	095	5053150	22,96
5638 022-01		1	○	095	5038584	14,75
5638 022-02		1	○	095	5038585	10,52
5638 022-03		1	○	095	5038586	12,17
5638 022-04		1	○	095	5038587	27,00
5638 022-05		1	●	095	5892877	34,60
5638 024-01		1	○	095	5038566	35,90
5638 024-02		1	○	095	5038567	27,80
5638 024-03		1	○	095	5038568	27,50
5638 024-04		1	○	095	5038569	35,90
5641 001-22		1	○	095	5038627	1,79
5641 005-01		1	○	095	5038628	2,07
5641 005-05		1	○	095	5038629	1,79
5641 005-06		1	○	095	5036754	1,79
5641 005-79		1	●	095	5892870	3,88
5680 015-01		1	○	095	5012483	44,70
5680 015-02		1	○	095	5012484	61,80
5680 015-05		1	○	095	5012482	40,70
5680 035-05		1	○	095	5045221	44,40
5680 035-06		1	○	095	5012486	11,29
5680 035-07		1	○	095	5012487	46,20
5680 065-10		1	○	095	5012479	150,00
5680 065-11		1	○	095	5012480	150,00
5680 065-12		1	○	095	5012481	120,00
5680 065-13		1	○	095	5012478	120,00
5680 092-01		1	○	095	5043619	61,80
5692 012-01		1	○	095	5012445	8,33
5692 020-04		1	○	095	5100791	56,90
5692 020-06		1	○	095	5055287	56,90
5692 035-04		1	●	095	5892819	141,00
60000-M1		1	●	THD	5079243	77,10
60000-M1.2		1	●	THD	5079244	76,20
60000-M1.4		1	●	THD	5079245	74,30
60000-M1.6		1	●	THD	5079246	69,50
60000-M2		1	●	THD	5079249	60,00
60000-M2.5		1	●	THD	5079252	53,30

Bezeichnung / Designation	Sorte / Grade	VE / US		Disc. Gr.	Article No.	EURO Stück / piece
60000-M3		1	●	THD	5079254	57,10
60000-M4		1	●	THD	5079256	57,10
60000-M5		1	●	THD	5079258	50,50
60000-M6		1	●	THD	5079259	50,50
60000-M8		1	●	THD	5079261	53,30
60000-M10		1	●	THD	5079263	63,80
60000-M12		1	●	THD	5079265	82,80
60000-M14		1	●	THD	5079266	82,80
60000-M16		1	●	THD	5079267	110,00
60000-M20		1	●	THD	5079269	115,00
60000-M24		1	●	THD	5079271	168,00
60000-M30		1	●	THD	5079273	236,00
60003-M2		1	●	THD	5079278	76,20
60003-M2.5		1	●	THD	5079280	69,50
60003-M3		1	●	THD	5079282	73,30
60003-M3.5		1	●	THD	5079283	73,30
60003-M4		1	●	THD	5079284	73,30
60003-M5		1	●	THD	5079285	61,00
60003-M6		1	●	THD	5079286	61,00
60003-M7		1	●	THD	5079287	73,30
60003-M8		1	●	THD	5079288	64,70
60003-M10		1	●	THD	5079289	82,80
60003-M12		1	●	THD	5079290	99,10
60003-M14		1	●	THD	5079291	99,10
60003-M16		1	●	THD	5079292	140,00
60003-M18		1	●	THD	5079293	149,00
60003-M20		1	●	THD	5079294	149,00
61000-M5X0.5		1	●	THD	5079420	59,00
61000-M6X0.5		1	●	THD	5079421	57,10
61000-M6X0.75		1	●	THD	5079422	57,10
61000-M8X0.75		1	●	THD	5079426	61,00
61000-M8X1		1	●	THD	5079427	59,00
61000-M10X1		1	●	THD	5079432	76,20
61000-M10X1.25		1	●	THD	5079433	77,10
61000-M12X1		1	●	THD	5079437	86,70
61000-M12X1.25		1	●	THD	5079438	96,20
61000-M12X1.5		1	●	THD	5079439	82,80
61000-M14X1		1	●	THD	5079442	91,40
61000-M14X1.5		1	●	THD	5079444	83,80
61000-M16X1		1	●	THD	5079448	124,00
61000-M16X1.5		1	●	THD	5079450	120,00
61000-M18X1		1	●	THD	5079452	129,00
61000-M18X1.5		1	●	THD	5079453	122,00
61000-M20X1		1	●	THD	5079455	129,00
61000-M20X1.5		1	●	THD	5079456	124,00
61000-M22X1.5		1	●	THD	5079460	166,00
61000-M24X1.5		1	●	THD	5079463	169,00
61000-M30X1.5		1	●	THD	5079476	236,00
62000-UNC2		1	●	THD	5079574	69,50
62000-UNC4		1	●	THD	5079578	59,00
62000-UNC6		1	●	THD	5079582	54,30
62000-UNC8		1	●	THD	5079585	54,30
62000-UNC1/4		1	●	THD	5079573	57,10
62000-UNC5/16		1	●	THD	5079580	61,00
62000-UNC3/8		1	●	THD	5079577	76,20
62000-UNC7/16		1	●	THD	5079583	76,20
62000-UNC1/2		1	●	THD	5079572	86,70
62000-UNC9/16		1	■	THD	5079586*	97,10
62000-UNC5/8		1	●	THD	5079581	120,00
62000-UNC3/4		1	●	THD	5079576	124,00
62000-UNC1X8		1	●	THD	5079571	194,00
63000-UNF10		1	●	THD	5079606	57,10
63000-UNF1/4		1	●	THD	5079592	57,10
63000-UNF5/16		1	●	THD	5079599	61,00
63000-UNF3/8		1	●	THD	5079596	76,20
63000-UNF7/16		1	●	THD	5079602	76,20
63000-UNF1/2		1	●	THD	5079591	86,70
63000-UNF9/16		1	●	THD	5079605	97,10
63000-UNF5/8		1	●	THD	5079600	120,00
63000-UNF3/4		1	●	THD	5079595	124,00

Bezeichnung / Designation	Sorte / Grade	VE / US		Disc. Gr.	Article No.	EURO Stück / piece
63000-UNF7/8		1	●	THD	5079603	169,00
64000-G1/8		1	●	THD	5079622	80,90
64000-G1/4		1	●	THD	5079621	83,80
64000-G3/8		1	●	THD	5079625	118,00
64000-G1/2		1	●	THD	5079620	118,00
64000-G3/4		1	●	THD	5079624	156,00
64000-G1		1	●	THD	5079619	238,00
7021345-M6	TIN	1	●	THS	5200405	96,90
7021345-M8	TIN	1	●	THS	5200406	124,00
7021345-M10	TIN	1	●	THS	5200407	146,00
7021365-M3	TIN	1	●	THS	5200409	46,40
7021365-M4	TIN	1	●	THS	5200410	45,80
7021365-M5	TIN	1	●	THS	5200411	48,40
7021365-M6	TIN	1	●	THS	5200412	50,30
7021365-M8	TIN	1	●	THS	5200408	64,00
7021365-M10	TIN	1	●	THS	5200414	77,30
7021366-M3	TICN	1	●	THS	5200413	51,30
7021366-M4	TICN	1	●	THS	5200424	48,40
7021366-M5	TICN	1	●	THS	5200423	51,20
7021366-M6	TICN	1	●	THS	5200422	52,50
7021366-M8	TICN	1	●	THS	5200425	68,10
7021366-M10	TICN	1	●	THS	5200426	84,10
7026345-M12	TIN	1	■	THS	5200447*	186,00
7026345-M16	TIN	1	●	THS	5200448	255,00
7026345-M20	TIN	1	●	THS	5200449	392,00
7026365-M12	TIN	1	●	THS	5200450	96,80
7026365-M14	TIN	1	●	THS	5200451	117,00
7026365-M16	TIN	1	●	THS	5200452	127,00
7026365-M20	TIN	1	●	THS	5200454	197,00
7051770-M2		1	●	THS	5200676	36,60
7051770-M2.5		1	●	THS	5200674	35,70
7051770-M2.6		1	●	THS	5200673	39,70
7051770-M3		1	●	THS	5200694	28,90
7051770-M3.5		1	●	THS	5200693	32,90
7051770-M4		1	●	THS	5200684	28,90
7051770-M5		1	●	THS	5200683	29,50
7051770-M6		1	●	THS	5200692	30,90
7051770-M7		1	●	THS	5200691	40,40
7051770-M8		1	●	THS	5200690	36,60
7051770-M10		1	●	THS	5200689	42,00
7051773-M3	VAP	1	●	THS	5200688	28,90
7051773-M4	VAP	1	●	THS	5200687	28,90
7051773-M5	VAP	1	●	THS	5200686	29,50
7051773-M6	VAP	1	●	THS	5200685	30,90
7051773-M8	VAP	1	●	THS	5200706	36,60
7051773-M10	VAP	1	●	THS	5200705	42,00
7051775-M3	TIN	1	●	THS	5200696	38,10
7051775-M4	TIN	1	●	THS	5200695	38,10
7051775-M5	TIN	1	●	THS	5200704	38,50
7051775-M6	TIN	1	●	THS	5200703	40,00
7051775-M7	TIN	1	●	THS	5200700	60,70
7051775-M8	TIN	1	●	THS	5200702	54,70
7051775-M10	TIN	1	●	THS	5200701	61,50
7051776-M3	TICN	1	●	THS	5200699	39,40
7051776-M4	TICN	1	●	THS	5200698	39,40
7051776-M5	TICN	1	●	THS	5200697	40,00
7051776-M6	TICN	1	●	THS	5200718	41,60
7051776-M8	TICN	1	●	THS	5200717	59,10
7051776-M10	TICN	1	●	THS	5200708	64,60
7053770-M2		1	●	THS	5200707	38,90
7053770-M3		1	●	THS	5200712	32,00
7053770-M4		1	●	THS	5200711	32,00
7053770-M5		1	●	THS	5200710	34,40
7053770-M6		1	●	THS	5200709	36,20
7053770-M8		1	●	THS	5200716	40,80
7053770-M10		1	●	THS	5200715	48,40
7056770-M3		1	●	THS	5200760	35,70
7056770-M4		1	●	THS	5200761	36,60
7056770-M5		1	●	THS	5200762	34,40
7056770-M6		1	●	THS	5200763	34,40

Bezeichnung / Designation	Sorte / Grade	VE / US		Disc. Gr.	Article No.	EURO Stück / piece
7056770-M8		1	●	THS	5200764	**37,50**
7056770-M10		1	●	THS	5200765	**47,70**
7056770-M12		1	●	THS	5200766	**56,10**
7056770-M14		1	●	THS	5200767	**74,40**
7056770-M16		1	●	THS	5200768	**79,30**
7056770-M18		1	●	THS	5200769	**118,00**
7056770-M20		1	●	THS	5200770	**117,00**
7056770-M22		1	●	THS	5200771	**163,00**
7056770-M24		1	●	THS	5200772	**152,00**
7056770-M27		1	●	THS	5200773	**206,00**
7056770-M30		1	●	THS	5200774	**258,00**
7056770-M33		1	●	THS	5200775	**384,00**
7056770-M36		1	●	THS	5200776	**438,00**
7056773-M12	VAP	1	●	THS	5200777	**56,10**
7056773-M14	VAP	1	●	THS	5200778	**74,40**
7056773-M16	VAP	1	●	THS	5200779	**79,30**
7056775-M12	TIN	1	●	THS	5200780	**74,90**
7056775-M14	TIN	1	●	THS	5200792	**96,70**
7056775-M16	TIN	1	●	THS	5200791	**101,00**
7056775-M18	TIN	1	○	THS	5200790	**162,00**
7056775-M20	TIN	1	●	THS	5200789	**160,00**
7056776-M12	TICN	1	●	THS	5200788	**77,30**
7056776-M14	TICN	1	●	THS	5200787	**99,10**
7056776-M16	TICN	1	●	THS	5200781	**104,00**
7058770-M12		1	●	THS	5200782	**62,20**
7058770-M14		1	●	THS	5200783	**81,60**
7058770-M16		1	●	THS	5200784	**85,40**
7058770-M20		1	●	THS	5200786	**128,00**
7126365-M8X1	TIN	1	●	THS	5200804	**83,90**
7126365-M10X1	TIN	1	●	THS	5200806	**93,90**
7126365-M12X1.25	TIN	1	●	THS	5200807	**113,00**
7126365-M12X1.5	TIN	1	●	THS	5200808	**104,00**
7126365-M14X1.5	TIN	1	●	THS	5200809	**131,00**
7126365-M16X1.5	TIN	1	●	THS	5200810	**134,00**
7126365-M20X1.5	TIN	1	●	THS	5200812	**186,00**
7156770-M4X0.5		1	●	THS	5200887	**49,20**
7156770-M5X0.5		1	●	THS	5200897	**51,10**
7156770-M6X0.5		1	●	THS	5200898	**53,40**
7156770-M6X0.75		1	●	THS	5200899	**54,50**
7156770-M8X0.75		1	●	THS	5200900	**56,10**
7156770-M8X1		1	●	THS	5200901	**51,10**
7156770-M10X1		1	●	THS	5200902	**53,40**
7156770-M10X1.25		1	●	THS	5200903	**76,30**
7156770-M12X1		1	●	THS	5200904	**63,70**
7156770-M12X1.25		1	●	THS	5200905	**79,30**
7156770-M12X1.5		1	●	THS	5200906	**62,20**
7156770-M14X1.5		1	●	THS	5200907	**83,90**
7156770-M16X1.5		1	●	THS	5200908	**98,40**
7156770-M18X1.5		1	●	THS	5200909	**128,00**
7156770-M20X1.5		1	●	THS	5200918	**125,00**
7156770-M22X1.5		1	●	THS	5200917	**146,00**
7156770-M24X1.5		1	●	THS	5200916	**157,00**
7156770-M26X1.5		1	●	THS	5200915	**224,00**
7156770-M27X1.5		1	●	THS	5200913	**232,00**
7156770-M27X2		1	●	THS	5200911	**258,00**
7156770-M28X1.5		1	●	THS	5200914	**255,00**
7156770-M30X1.5		1	●	THS	5200912	**258,00**
7156770-M30X2		1	●	THS	5200910	**272,00**
7456770-G1/8		1	●	THS	5200941	**58,40**
7456770-G1/4		1	●	THS	5200942	**79,30**
7456770-G3/8		1	●	THS	5200939	**98,40**
7456770-G1/2		1	●	THS	5200943	**124,00**
7456770-G3/4		1	●	THS	5200940	**198,00**
7456770-G1		1	●	THS	5200944	**313,00**
8021006-M6	TICN	1	●	TS2	5344196	**250,00**
8021006-M8	TICN	1	●	TS2	5344197	**299,00**
8021006-M10	TICN	1	●	TS2	5344198	**362,00**
8026006-M12	TICN	1	●	TS2	5344199	**426,00**
80311-M3		1	●	TS2	5079695	**174,00**
80311-M4		1	●	TS2	5079696	**184,00**

Bezeichnung / Designation	Sorte / Grade	VE / US		Disc. Gr.	Article No.	EURO Stück / piece
80311-M5		1	●	TS2	5079697	**217,00**
80311-M6		1	●	TS2	5079698	**251,00**
80311-M8		1	●	TS2	5079699	**306,00**
8031106-M3	TICN	1	●	TS2	5079702	**177,00**
8031106-M4	TICN	1	●	TS2	5079703	**190,00**
8031106-M5	TICN	1	●	TS2	5079704	**220,00**
8031106-M6	TICN	1	●	TS2	5079705	**266,00**
8031106-M8	TICN	1	●	TS2	5079706	**325,00**
8031106-M10	TICN	1	●	TS2	5079707	**425,00**
8031106-M12	TICN	1	●	TS2	5079708	**541,00**
8031116-M5	TICN	1	●	TS2	5079714	**243,00**
8031116-M6	TICN	1	●	TS2	5079715	**292,00**
8031116-M7	TICN	1	●	TS2	5079716	**351,00**
8031116-M8	TICN	1	●	TS2	5079717	**355,00**
8031116-M10	TICN	1	●	TS2	5079718	**458,00**
8031310-M6		1	●	TS2	5115683	**251,00**
8031310-M7		1	●	TS2	5115682	**302,00**
8031310-M8		1	●	TS2	5115681	**302,00**
8031310-M10		1	●	TS2	5115680	**392,00**
803141-M5		1	●	TS2	5079719	**239,00**
803141-M6		1	■	TS2	5079720*	**278,00**
803141-M8		1	●	TS2	5079721	**335,00**
803141-M10		1	●	TS2	5079722	**436,00**
8031417-M5	TAFT	1	●	TS2	5079723	**243,00**
8031417-M6	TAFT	1	●	TS2	5079724	**292,00**
8031417-M8	TAFT	1	●	TS2	5079725	**355,00**
8031417-M10	TAFT	1	●	TS2	5079726	**458,00**
8036310-M12		1	●	TS2	5293942	**450,00**
80410-M3		1	●	TS2	5079747	**181,00**
80410-M4		1	●	TS2	5079748	**188,00**
80410-M5		1	●	TS2	5079749	**225,00**
80410-M6		1	●	TS2	5079750	**262,00**
80410-M8		1	●	TS2	5079751	**320,00**
80410-M10		1	●	TS2	5079752	**422,00**
8041006-M3	TICN	1	●	TS2	5079753	**184,00**
8041006-M4	TICN	1	●	TS2	5079754	**194,00**
8041006-M5	TICN	1	●	TS2	5079755	**228,00**
8041006-M6	TICN	1	●	TS2	5079756	**277,00**
8041006-M8	TICN	1	●	TS2	5079757	**338,00**
804101-M5		1	●	TS2	5079759	**251,00**
804101-M6		1	●	TS2	5079760	**288,00**
804101-M8		1	●	TS2	5079761	**345,00**
804101-M10		1	■	TS2	5079762*	**462,00**
8041056-M6	TICN	1	●	TS2	5827978	**305,00**
8041056-M8	TICN	1	●	TS2	5827979	**365,00**
8041056-M10	TICN	1	●	TS2	5827980	**489,00**
804601-M12		1	●	TS2	5079770	**533,00**
8046056-M12	TICN	1	●	TS2	5827981	**564,00**
8121006-M8X1	TICN	1	●	TS2	5344201	**373,00**
8121006-M10X1	TICN	1	●	TS2	5344202	**407,00**
8126006-M12X1.5	TICN	1	●	TS2	5344204	**455,00**
8126006-M14X1.5	TICN	1	●	TS2	5344205	**575,00**
8126006-M16X1.5	TICN	1	●	TS2	5344206	**650,00**
81311-M8X1		1	●	TS2	5079795	**395,00**
81311-M10X1		1	●	TS2	5079796	**469,00**
81311-M14X1.5		1	■	TS2	5079798*	**582,00**
81311-M16X1.5		1	■	TS2	5079799*	**641,00**
8136310-M10X1		1	●	TS2	5115684	**423,00**
8136310-M12X1.25		1	●	TS2	5293943	**463,00**
8136310-M12X1.5		1	●	TS2	5115686	**463,00**
8136310-M16X1.5		1	●	TS2	5115688	**647,00**
8136417-M8X1	TAFT	1	●	TS2	5079806	**442,00**
8136417-M10X1	TAFT	1	●	TS2	5079807	**513,00**
8136417-M12X1.5	TAFT	1	●	TS2	5079808	**570,00**
8141056-M6X0.75	TICN	1	●	TS2	5827982	**320,00**
8141056-M8X1	TICN	1	●	TS2	5827983	**472,00**
8141056-M10X1	TICN	1	●	TS2	5827984	**543,00**
8146056-M12X1	TICN	1	●	TS2	5827985	**648,00**
8146056-M12X1.5	TICN	1	■	TS2	5827986*	**595,00**
8146056-M14X1.5	TICN	1	●	TS2	5827987	**714,00**

Bezeichnung / Designation	Sorte / Grade	VE / US		Disc. Gr.	Article No.	EURO Stück / piece
8146056-M16X1.5	TICN	1	●	TS2	5827988	**833,00**
8231106-UNC10	TICN	1	●	TS2	5079817	**218,00**
8231106-UNC1/4	TICN	1	●	TS2	5079818	**306,00**
8231106-UNC5/16	TICN	1	●	TS2	5079819	**373,00**
8231106-UNC3/8	TICN	1	●	TS2	5079820	**489,00**
8331106-UNF10	TICN	1	●	TS2	5079827	**218,00**
8331106-UNF1/4	TICN	1	●	TS2	5079828	**306,00**
8331106-UNF3/8	TICN	1	●	TS2	5079830	**489,00**

_Walter Multiply

Nachschleif- und Wiederbeschichtungsservice / Reconditioning-Service / Service de reconditionnement / Servizio di riaffilatura / El servicio de reacondicionamiento / Reconditioning-Service

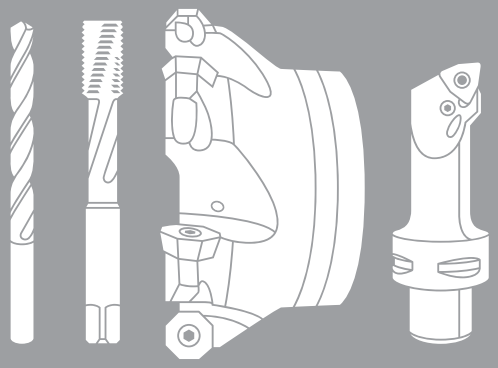

DE
EN

Unser **Original** Nachschleif- und Wiederbeschichtungsservice

Werkzeugbereich und Lieferzeiten:

	Werkzeugbereich (Standard)	Lieferzeiten
Walter	PKD-Messer für F4050	1–2 Arbeitswochen
Walter Titex	SC-Bohrer SC-Reibahlen	2–3 Arbeitswochen 6 Arbeitswochen
Walter Prototyp	SC-Fräser SC-Gewindefräser	3–4 Arbeitswochen

Allgemeine Verkaufsbedingungen für den Nachschleif- und Wiederbeschichtungsservice:

- Mindestauftragswert: 100,– € pro Auftrag
- Bearbeitungsgebühr: 25,– € netto für Aufträge unterhalb des Mindestauftragswerts.

- Preise für nicht aufgeführte Beschichtungen werden kalkuliert unter Anwendung des Preises für die Normalbeschichtung auf die Nachschleifkosten für den Rohling. In diesem Fall unterliegt die Lieferzeit einer Bestätigung.

- Preise und Lieferzeiten für Sonderwerkzeuge und hier nicht aufgeführte Abmessungen werden gesondert vereinbart.

- Die Preisliste kann geändert werden und die darin aufgeführten Spezifikationen und Preise können Druckfehler enthalten. Aus solchen Änderungen oder Fehlern sind keine Ansprüche abzuleiten.

Die Preisliste gilt ab Januar 2024 und setzt die bisherige Preisliste außer Kraft.

Reconditioning Plus Service:

EURO		
Artikel-Nr.	**Zusätzlicher Service für Nachschleifen**	**Netto-Preis/ Stück**
7051715	Zusätzliches Kundenlabel auf Verpackung	1,12
7051716	Werkzeugsortierung gemäß Kundenanforderung (Mindestlänge)	1,52
7051717	Zusätzliche Laserbeschriftung gemäß Kundenanforderung	2,01
7051718	Messprotokoll	9,00
7976053	Entschichten Vollhartmetallbohrer, Supreme Line	8,63

The **Original Reconditioning Service** provided by us

Tool Range and delivery times:

	Tool Range (standard)	Delivery times
Walter	PCD blade for F4050	1–2 working weeks
Walter Titex	SC drills SC reamers	2–3 working weeks 6 working weeks
Walter Prototyp	SC mills SC threadmills	3–4 working weeks

Specific Sales Conditions related to the reconditioning service:

- Minimum order value: 100,– € per single order.
- Handling charge: 25,– € net for orders below the minimum order value.

- Prices for coatings not listed, will be calculated applying the price of a normal coating to the regrind cost from the blank. In that case delivery time is subject to confirmation.

- Prices for special tools and dimensions not listed here below are subject to specific quotation.

- The list is subject to change of any description and also to printing errors in the listed specifications and prices. Any such changes or errors do not constitute ground for claims of any kind.

The prices are valid from January 2024 and supersede the previous price lists.

Reconditioning Plus Service:

EURO		
Article No.	**Additional Service for Reconditioning**	**Net-price/ Piece**
7051715	Additional label	1,12
7051716	Sorting of the tools by customer demands (minimum lengths)	1,52
7051717	Additional lasermarking according to customer demands	2,01
7051718	Measurement report	9,00
7976053	Decoating solid cardide drills, Supreme Line	8,63

Description du **Service de Reconditionnement d'origine** que nous proposons :

Gamme d'outils et délais de livraison :

	Gamme d'outils (standard)	Délais de livraison
Walter	Lames PCD pour fraise F4050	1 à 2 semaines de travail
Walter Titex	Forets SC Alésoirs SC	2 à 3 semaines de travail 6 semaines de travail
Walter Prototyp	Fraises SC Fraises à fileter SC	3 à 4 semaines de travail

Conditions générales de vente du service de reconditionnement :

- Montant de commande minimal : 100,– € par commande.
- Frais de gestion : 25,– € net pour les commandes inférieures au montant de commande minimal.

- Les prix des revêtements qui ne sont pas indiqués ci-dessous seront calculés sur la base du prix d'un revêtement normal au prix de rectification à la découpe. Dans ce cas, le délai de livraison est soumis à confirmation.

- Les prix des diamètres et des outils spéciaux qui ne sont pas indiqués ci-dessous sont soumis à des devis spécifiques.

- Cette liste est susceptible d'être modifiée en raison de changements de descriptions ou d'erreurs d'impression au niveau des spécifications et des prix. Ces modifications ou erreurs ne pourront en aucun cas faire l'objet de réclamations.

Les prix sont valables à partir de Janvier 2024 et remplacent les listes de prix précédentes.

Reconditionnement Service Plus :

EURO		
N° article	**Service supplémentaire pour le reconditionnement**	**Prix net / pièce**
7051715	Etiquettage additionnel	1,12
7051716	Tri des outils selon la demande des clients (longueur minimum)	1,52
7051717	Marquage laser supplémentaire selon la demande des clients	2,01
7051718	Rapport de mesure	9,00
7976053	Retrait du revêtement sur les forets carbure, Supreme Line	8,63

Cosa offre il nostro **Servizio Originale di riaffilatura**

Gamma e tempi di consegna:

	Gamma (standard)	Tempi di consegna
Walter	Tagliente PKD per F4050	1–2 settimane lavorative
Walter Titex	Punte SC Alesatori SC	2–3 settimane lavorative 6 settimane lavorative
Walter Prototyp	Frese SC Frese a filettare SC	3–4 settimane lavorative

Condizioni speciali di vendita relative al servizio di riaffilatura:

- Valore minimo dell'ordine: 100,– € per ordine.
- Spese di gestione: 25,– € netti per ordini di valore inferiore al minimo.

- I prezzi per i rivestimenti non elencati di seguito saranno calcolati applicando il prezzo di un rivestimento normale ai costi di riaffilatura dal grezzo. In questo caso, i tempi di consegna sono soggetti a conferma.

- Per utensili speciali e per le dimensioni non elencate di seguito, richiedere un preventivo specifico.

- Le specifiche e i prezzi indicati nel listino sono soggetti a modifiche delle descrizioni e a errori di stampa. Eventuali modifiche o errori non costituiscono un valido motivo per reclami di qualsiasi tipo.

I prezzi sono validi da Gennaio 2024 e sostituiscono i listini precedenti.

Servizio di Rigenerazione Plus:

EURO		
Nr. Articolo	**Servizi aggiuntivi per la Rigenerazione**	**Prezzo Netto/ pezzo**
7051715	Etichetta aggiuntiva	1,12
7051716	Selezione degli utensili su richiesta del cliente (lunghezza minima)	1,52
7051717	Marcatura a laser aggiuntiva secondo le richieste del cliente	2,01
7051718	Protocollo di misura	9,00
7976053	Rimozione del rivestimento delle punte, Linea Supreme	8,63

ES
NL

El Servicio de reacondicionamiento **Original** que nosotros proporcionamos:

Gama de herramientas y plazos de entrega:

	Gama de herramientas (estándar)	Plazos de entrega
Walter	Cuchilla PKD para F4050	1–2 semanas de trabajo
Walter Titex	Broca MD Escariadores-MD	2–3 semanas de trabajo 6 semanas de trabajo
Walter Prototyp	Fresa MD Fresas de roscar-MD	3–4 semanas de trabajo

Condiciones generales de venta para servicios de reacondicionamiento:

- Valor mínimo de pedido: 100,– € por pedido
- Gastos de transporte: 100,– € netos para pedidos inferiores al valor mínimo.

- Los precios para los recubrimientos que no aparecen en la lista de precios se calcularán sumando el precio de un recubrimiento normal al coste del desbastado de la pieza virgen. En ese caso, el plazo de entrega está sujeto a una confirmación previa.

- Los precios para herramientas y dimensiones especiales que no aparecen en la lista de precios, están sujetos a oferta previa.

- Esta lista puede sufrir modificaciones en cuanto a cualquier descripción y también en cuanto a errores de impresión en las especificaciones y precios listados. Dichas modificaciones o errores no constituyen motivo alguno para ningún tipo de reclamaciónes.

Estos precios son válidos a partir de Enero de 2024 e invalidan las listas de precios anteriores.

Servicio Plus de reacondicionado:

EURO		
Artículo núm.	**Servicio adicional de reacondicionado**	**Precio neto/ Unidad**
7051715	Etiqueta adicional	1,12
7051716	Clasificación de las herramientas según demanda de cliente (longitudes mínimas)	1,52
7051717	Marcaje adicional según demanda de cliente	2,01
7051718	Informe de medición	9,00
7976053	Decapado de brocas de metal duro, línea Supreme	8,63

Onze **Originele Reconditioning-Service:**

Gereedschappen en leveringstijden:

	Gereedschapsaanbod (standaard)	Leveringstijden
Walter	PKD-freesmessen voor F4050	1 tot 2 weken
Walter Titex	SC-boren SC-ruimen	2 tot 3 weken 6 weken
Walter Prototyp	SC-frezen SC-schroefdraadfrezen	3 tot 4 weken

Algemene verkoopvoorwaarden voor de reconditionering-service:

- Minimum orderwaarde: 100,– € per order.
- Behandelingskosten: 25,– € netto voor orders onder de minimum orderwaarde.

- De prijs voor hieronder niet-genoemde coatings bestaat uit de prijs van een normale coating, vermeerderd met de kosten van het herslijpen van een halffabricaat. In dit geval moet de levertijd bevestigd worden.

- Prijzen voor speciaal gereedschap en niet hieronder genoemde maten volgens specifieke prijsopgave.

- Deze lijst is geldig onder voorbehoud van wijzigingen of drukfouten van de genoemde specificaties en prijzen.
  Aan zulke wijzigingen of fouten kunnen geen rechten ontleend worden.

De prijzen zijn geldig vanaf Januari 2024 en vervangen de vorige prijslijsten.

Reconditioning Service Plus:

EURO		
Artikel nummer	**Extra service voor Reconditioning**	**Nettoprijs/stuk**
7051715	Extra etiket	1,12
7051716	Gereedschap sorteren volgens de vraag van de klant (minimale lengte)	1,52
7051717	Extra lasermarkering op aanvraag van de klant	2,01
7051718	Verslag van de meting	9,00
7976053	Ontcoaten van de Volharmetaal boren, Supreme Line	8,63

EURO				Diameter Range (Dc)									
Product Family	Coating	Technical Information	Net-price / piece	2,00–2,99	3,00–6,00	6,01–8,00	8,01–10,00	10,01–12,00	12,01–14,00	14,01–16,00	16,01–18,00	18,01–20,00	20,01–25,00
Drilling / SC													
A1163	uncoated	XD03	Article No.		6027228	6027229	6028170	6028171					
			Price		16,57	18,68	20,73	27,00					
A1166TIN	TIN	XD03	Article No.		6028178	6028179	6028180	6028181	6028182				
			Price		21,32	23,98	26,70	34,70	40,00				
A1166	uncoated	XD03	Article No.		6027228	6027229	6028170	6028171	6028172	6028173	6028174		
			Price		16,57	18,68	20,73	27,00	31,10	35,20	38,40		
A1174C	uncoated	NC 120°	Article No.		6027228	6027229	6028170	6028171		6028173		6028175	
			Price		16,57	18,68	20,73	27,00		35,20		41,40	
A1174	uncoated	NC 90°	Article No.		6027228	6027229	6028170	6028171		6028173		6028175	
			Price		16,57	18,68	20,73	27,00		35,20		41,40	
A1263	uncoated	XD08	Article No.		6027228	6027229	6028170	6028171					
			Price		16,57	18,68	20,73	27,00					
A1276TFL	TFL	XD08	Article No.		6028178	6028179	6028180	6028181					
			Price		21,32	23,98	26,70	34,70					
A3289DPL	DPL	XD03	Article No.		6799146	6799147	6799148	6799149	6799170	6799171	6799172	6799173	
			Price		26,10	29,30	32,60	42,40	48,90	55,40	60,30	65,20	
A3367	uncoated	XD05	Article No.		6027228	6027229	6028170	6028171	6028172	6028173			
			Price		16,57	18,68	20,73	27,00	31,10	35,20			
A3382XPL	XPL	XD05	Article No.		6028188	6028189	6028190	6028191	6028192	6028193	6028194	6028195	
			Price		23,70	26,70	29,60	38,50	44,40	50,30	54,80	59,30	
A3389AML [1]	AML	XD05	Article No.	6028224									
			Price	39,10									
A3389DPL	DPL	XD05	Article No.		6799174	6799175	6799176	6799177	6799178	6799179	6799180	6799181	
			Price		26,10	29,30	32,60	42,40	48,90	55,40	60,30	65,20	
A3486TIP	TIP	XD08	Article No.		6028188	6028189	6028190						
			Price		23,70	26,70	29,60						
A6181AML [1]	AML	Pilot	Article No.	7207843									
			Price	39,10									
A6181TFT	TFT	Pilot	Article No.		7203877	7203878	7203879	7203890	7203891	7203892			
			Price		26,10	29,30	32,60	42,30	48,90	55,40			
A6489AMP [1]	AMP	XD08	Article No.	6028224									
			Price	39,10									
A6489DPP	DPP	XD08	Article No.		6028214	6028215	6028216	6028217	6028218	6028219	6028220	6028221	
			Price		28,70	32,30	35,80	46,60	53,80	60,90	66,30	71,70	
A6589AMP [1]	AMP	XD12	Article No.	6028224									
			Price	39,10									
A6589DPP	DPP	XD12	Article No.		6028214	6028215	6028216	6028217	6028218	6028219	6028220	6028221	
			Price		28,70	32,30	35,80	46,60	53,80	60,90	66,30	71,70	
A6689AMP [1]	AMP	XD16	Article No.	6028224									
			Price	39,10									
A6789AMP [1]	AMP	XD20	Article No.	6028224									
			Price	39,10									
A6794TFP	TFP	XD20	Article No.		6028208	6028209	6028210						
			Price		37,90	42,70	47,40						
A6889AMP [1]	AMP	XD25	Article No.	6028224									
			Price	39,10									
A6989AMP [1]	AMP	XD30	Article No.	6028224									
			Price	39,10									
A6994TFP	TFP	XD30	Article No.		6028208	6028209	6028210						
			Price		37,90	42,70	47,40						
A7495TTP	TTP	XD40	Article No.		6518024	6518026	6518027	6518028					
			Price		47,40	53,30	59,30	77,00					

* Please note: for inch solid carbide endmills are valid the same prices of the corresponding metric solid carbide endmills
Example: AH4034217 same price as H4034217
[1] High-Performance Micro Drills minimum order quantity 5 pieces
[2] The diameter of the countersink step is required for calculating the price

EURO				Diameter Range (Dc)										
Product Family	Coating	Technical Information	Net-price / piece	2,00–2,99	3,00–6,00	6,01–8,00	8,01–10,00	10,01–12,00	12,01–14,00	14,01–16,00	16,01–18,00	18,01–20,00	20,01–25,00
A7595TTP	TTP	XD50	Article No.		6518024	6518026	6518027						
			Price		47,40	53,30	59,30						
DB133 [1]	WJ30EL	XD05	Article No.	8206811									
			Price	39,10									
DB133 [1]	WJ30ER	XD08	Article No.	8206812									
			Price	39,10									
DB133 [1]	WJ30ER	XD12	Article No.	8206813									
			Price	39,10									
DB133 [1]	WJ30ER	XD16	Article No.	8206814									
			Price	39,10									
DB133 [1]	WJ30ER	XD20	Article No.	8206815									
			Price	39,10									
DB133 [1]	WJ30ER	XD25	Article No.	8206816									
			Price	39,10									
DB133 [1]	WJ30ER	XD30	Article No.	8206810									
			Price	39,10									
DC118	WJ30ET	Pilot	Article No.		8339465	8339466	8339467	8339468	8339469	8340140	8340141	8340142	
			Price		26,10	29,30	32,60	42,30	48,90	55,40	60,30	65,20	
DC150	WJ30RE	XD03	Article No.		6716255	6716256	6716257	6716258	6716259	6716270	6716277	6716278	
			Price		21,32	23,98	26,70	34,70	40,00	45,30	49,30	53,30	
DC150	WJ30RE	XD05	Article No.		6716271	6716272	6716273	6716274	6716275	6716276	6716279	6716280	
			Price		21,32	23,98	26,70	34,70	40,00	45,30	49,30	53,30	
DC150	WJ30TA	XD05	Article No.		7672568	7672569	7672570	7672571	7672572	7672573	7672574	7672575	
			Price		21,32	23,98	26,70	34,70	40,00	45,30	49,30	53,30	
DC150	WJ30TA	XD08	Article No.		6717026	6717027	6717028	6717029	6717180	6717181	6717182	6717183	
			Price		24,74	27,80	30,90	40,20	46,40	52,60	57,20	61,90	
DC150	WJ30TA	XD12	Article No.		6717184	6717185	6717186	6717187	6717188	6717189	6717190	6717191	
			Price		24,74	27,80	30,90	40,20	46,40	52,60	57,20	61,90	
DC160	WJ30ET	XD03	Article No.		7502077	7502078	7502079	7502180	7502181	7502182	7502183	7502184	
			Price		23,70	26,70	29,60	38,50	44,40	50,30	54,80	59,30	
DC160	WJ30ET	XD05	Article No.		7502185	7502186	7502187	7502188	7502189	7502190	7502191	7502192	7502193
			Price		23,70	26,70	29,60	38,50	44,40	50,30	54,80	59,30	82,90
DC160	WJ30ET	XD08	Article No.		7502194	7502195	7502196	7502197	7502198	7502199	7502200	7502201	
			Price		28,70	32,30	35,80	46,60	53,80	60,90	66,30	71,70	
DC160	WJ30EU	XD12	Article No.		7670897	7670898	7670899	7670910	7670911	7670912	7670913	7670914	
			Price		28,70	32,30	35,80	46,60	53,80	60,90	66,30	71,70	
DC160	WJ30EU	XD16	Article No.		7797629	7798040	7798041	7798042	7868687	7798043			
			Price		28,70	32,30	35,80	46,60	53,80	60,90			
DC160	WJ30EU	XD20	Article No.		7798044	7798045	7798046	7798047	7868688	7798048			
			Price		37,90	42,70	47,40	61,60	71,10	80,60			
DC160	WJ30EU	XD25	Article No.		7798049	7798050	7798051	7798052					
			Price		37,90	42,70	47,40	61,60					
DC160	WJ30EU	XD30	Article No.		7798053	7798054	7798055	7798056					
			Price		37,90	42,70	47,40	61,60					
DC165	WJ30UU	XD05	Article No.		8142814	8142815	8142816	8142817	8142818	8142819			
			Price		19,18	21,60	23,98	31,20	36,00	40,80			
DC166	WJ30UU	XD05	Article No.		7747015	7747023	7747031	7747039					
			Price		19,18	21,60	23,98	31,20					
DC170	WJ30EJ	XD03	Article No.		6799146	6799147	6799148	6799149	6799170	6799171	6799172	6799173	
			Price		26,10	29,30	32,60	42,40	48,90	55,40	60,30	65,20	
DC170	WJ30EJ	XD05	Article No.		6799174	6799175	6799176	6799177	6799178	6799179	6799180	6799181	
			Price		26,10	29,30	32,60	42,40	48,90	55,40	60,30	65,20	
DC170	WJ30EJ	XD08	Article No.		6799182	6799183	6799184	6799185	6799186	6799187	6799188	6799189	
			Price		28,70	32,30	35,90	46,60	53,80	61,00	66,30	71,70	

* Please note: for inch solid carbide endmills are valid the same prices of the corresponding metric solid carbide endmills
Example: AH4034217 same price as H4034217
[1] High-Performance Micro Drills minimum order quantity 5 pieces
[2] The diameter of the countersink step is required for calculating the price

EURO				Diameter Range (Dc)									
Product Family	Coating	Technical Information	Net-price / piece	2,00–2,99	3,00–6,00	6,01–8,00	8,01–10,00	10,01–12,00	12,01–14,00	14,01–16,00	16,01–18,00	18,01–20,00	20,01–25,00
DC170	WJ30EJ	XD12	Article No.		6799190	6799191	6799192	6799193	6799194	6799195	6799196	6799197	
			Price		28,70	32,30	35,90	46,60	53,80	61,00	66,30	71,70	
DC170	WJ30EJ	XD16	Article No.		6717194	6717195	6717196	6717197	6717198	6717199			
			Price		32,60	36,70	40,80	53,00	61,20	69,40			
DC170	WJ30EJ	XD20	Article No.		6717200	6717201	6717202	6717203	6717204	6717205			
			Price		36,50	41,10	45,70	59,40	68,60	77,70			
DC170	WJ30EJ	XD25	Article No.		7133594	7133595	7133596	7133597					
			Price		39,80	44,80	49,70	64,70					
DC170	WJ30EJ	XD30	Article No.		7133598	7133599	7133620	7133621					
			Price		44,80	50,30	55,90	72,70					
DC175	WJ30RZ	XD03	Article No.		8140946	8140947	8140948	8140949	8141430	8141431	8141432	8141433	
			Price		26,10	29,30	32,60	42,40	48,90	55,40	60,30	65,20	
DC175	WJ30RZ	XD05	Article No.		8141434	8141435	8141436	8141437	8141438	8141439	8141440	8141441	
			Price		26,10	29,30	32,60	42,40	48,90	55,40	60,30	65,20	
DC175	WJ30RY	XD08	Article No.		8141442	8141443	8141444	8141445	8141446	8141447			
			Price		28,70	32,30	35,90	46,60	53,80	61,00			
DC180	WJ30EZ	XD03	Article No.		8464768	8464769	8465760	8465761	8465762	8465763	8465764	8465765	
			Price		26,10	29,30	32,60	42,40	48,90	55,40	60,30	65,20	
DC180	WJ30EZ	XD05	Article No.		8465766	8465767	8465768	8465769	8465770	8465771	8465772	8465773	
			Price		26,10	29,30	32,60	42,40	48,90	55,40	60,30	65,20	
DC180	WJ30EY	XD08	Article No.		8465774	8465775	8465776	8465777	8465778	8465779	8465780	8465781	
			Price		28,70	32,30	35,90	46,60	53,80	61,00	66,30	71,70	
DC183	WJ30EZ	XD05	Article No.		8464391	8464392	8464393	8464394	8464395	8464396			
			Price		26,10	29,30	32,60	42,40	48,90	55,40			
DC183	WJ30EY	XD08	Article No.		8466082	8466083	8466084	8466085	8466086	8466087			
			Price		28,70	32,30	35,90	46,60	53,80	61,00			
DC260 [2]	WJ30ET	XD03	Article No.		7671585	7671586	7671587	7671588	7671589	7671640	7671641		
			Price		35,60	40,00	44,40	57,80	66,70	75,50	82,20		
K5191TFT	TFT	Pilot	Article No.		7203896	7203897							
			Price		28,40	32,00							

Milling / SC*

H2034217	TAA		Article No.			6518140	6518141	6518142		6518143		6518144	
			Price			34,70	37,40	45,40		53,40		66,70	
H2038217	TAA		Article No.			6518140	6518141	6518142		6518143		6518144	
			Price			34,70	37,40	45,40		53,40		66,70	
H2134217	TAA		Article No.				6518141	6518142		6518143		6518144	
			Price				37,40	45,40		53,40		66,70	
H2138217	TAA		Article No.				6518141	6518142		6518143		6518144	
			Price				37,40	45,40		53,40		66,70	
H302211	uncoated		Article No.			6115720	6115721			6115723			
			Price			27,00	29,10			41,60			
H3023138	TAX		Article No.					6027796					6027799
			Price					50,40					94,90
H3024148	TAX		Article No.									6027798	
			Price									74,20	
H302611	uncoated		Article No.			6115720	6115721	6115722					
			Price			27,00	29,10	35,30					
H302711	uncoated		Article No.			6115720	6115721	6115722		6115723		6115724	
			Price			27,00	29,10	35,30		41,60		51,90	
H3027416	TICN		Article No.			6027794	6027795						
			Price			38,60	41,60						
H302914	uncoated		Article No.			6115720	6115721	6115722				6115724	
			Price			27,00	29,10	35,30				51,90	

* Please note: for inch solid carbide endmills are valid the same prices of the corresponding metric solid carbide endmills
Example: AH4034217 same price as H4034217
[1] High-Performance Micro Drills minimum order quantity 5 pieces
[2] The diameter of the countersink step is required for calculating the price

EURO				Diameter Range (Dc)									
Product Family	Coating	Technical Information	Net-price / piece	2,00–2,99	3,00–6,00	6,01–8,00	8,01–10,00	10,01–12,00	12,01–14,00	14,01–16,00	16,01–18,00	18,01–20,00	20,01–25,00
H3029146	TICN		Article No.			6027794							
			Price			38,60							
H3058917	TAX		Article No.			6115758		6115760		6115761		6115762	
			Price			25,70		33,60		39,50		49,40	
H3070318	TAX		Article No.			6027721	6027722	6027723		6027724		6027725	
			Price			32,20	34,60	42,00		49,40		61,80	
H3071118	TAX		Article No.							6027724			
			Price							49,40			
H3071318	TAX		Article No.							6027724			
			Price							49,40			
H3094718	TAX		Article No.			6027737	6027738					6027741	
			Price			45,00	48,50					86,40	
H3094728	TAX		Article No.			6027737	6027738	6027739		6027740			
			Price			45,00	48,50	58,90		69,20			
H3121138	TAX		Article No.			6027794		6027796		6027797		6027798	
			Price			38,60		50,40		59,30		74,20	
H3127116	TICN		Article No.			6115758	6115759						
			Price			25,70	27,70						
H3170318	TAX		Article No.				6027722					6027725	
			Price				34,60					61,80	
H3171318	TAX		Article No.							6027724			
			Price							49,40			
H3182378	TAX		Article No.									6027784	
			Price									46,30	
H3183017	ACN		Article No.			6027760	6027761	6027762					
			Price			30,40	32,70	39,70					
H3183378	TAX		Article No.			6027780	6027781	6027782					
			Price			24,09	25,90	31,50					
H4036217	TAZ		Article No.			6705976	6705977	6705978		6705979		6706070	
			Price			34,70	37,40	45,40		53,40		66,70	
H4129318	TAX		Article No.				6115759						
			Price				27,70						
H4135217	TAZ		Article No.					6705978					
			Price					45,40					
H4137217	TAZ		Article No.									6706070	
			Price									66,70	
H4180378	TAX		Article No.			6027780	6027781	6027782		6027783		6027784	
			Price			24,09	25,90	31,50		37,10		46,30	
H4189278	TAX		Article No.			6027780	6027781	6027782		6027783		6027784	
			Price			24,09	25,90	31,50		37,10		46,30	
H602111	uncoated		Article No.			6115735	6115736	6115737		6115738			
			Price			18,00	19,37	23,52		27,70			
H6023114	CRN		Article No.							6115750			6115752
			Price							39,50			63,30
H602551	uncoated		Article No.			6115735	6115736	6115737		6115738		6115739	
			Price			18,00	19,37	23,52		27,70		34,60	
H602641	uncoated		Article No.			6115735	6115736	6115737		6115738		6115739	
			Price			18,00	19,37	23,52		27,70		34,60	
H602881	uncoated		Article No.					6115737					
			Price					23,52					
H608411	uncoated		Article No.				6115736	6115737		6115738		6115739	
			Price				19,37	23,52		27,70		34,60	
H608771	uncoated		Article No.							6115738		6115739	
			Price							27,70		34,60	

* Please note: for inch solid carbide endmills are valid the same prices of the corresponding metric solid carbide endmills
Example: AH4034217 same price as H4034217
[1] High-Performance Micro Drills minimum order quantity 5 pieces
[2] The diameter of the countersink step is required for calculating the price

EURO				Diameter Range (Dc)									
Product Family	Coating	Technical Information	Net-price / piece	2,00–2,99	3,00–6,00	6,01–8,00	8,01–10,00	10,01–12,00	12,01–14,00	14,01–16,00	16,01–18,00	18,01–20,00	20,01–25,00
H608871	uncoated		Article No.			6115735	6115736	6115737					
			Price			18,00	19,37	23,52					
H618911	uncoated		Article No.			6115735		6115737		6115738		6115739	
			Price			18,00		23,52		27,70		34,60	
H7073417	ACN		Article No.							6027763		6027764	6027765
			Price							46,70		58,40	74,80
H7073717	ACN		Article No.					6027762		6027763		6027764	
			Price					39,70		46,70		58,40	
H800111	uncoated		Article No.			6027742	6027743						
			Price			24,75	26,60						
H8004028	TAX		Article No.			6027754	6027755						
			Price			35,40	38,10						
H8005728	TAX		Article No.			6027754							
			Price			35,40							
H8011118	TAX		Article No.			6027754							
			Price			35,40							
H8015728	TAX		Article No.			6027754				6027757			
			Price			35,40				54,40			
H8015828	TAX		Article No.			6027754	6027755	6027756		6027757			
			Price			35,40	38,10	46,20		54,40			
H8082228	TAX		Article No.							6027797		6027798	
			Price							59,30		74,20	
H901411	uncoated		Article No.			6115735		6115737					
			Price			18,00		23,52					
H901451	uncoated		Article No.			6115735	6115736						
			Price			18,00	19,37						
MB265	WJ30CA	with Corner Radius	Article No.							6717209		6717220	6717221
			Price							53,40		66,70	85,40
MC025	WJ30TF	with Corner Radius	Article No.			7801098	7801099	7801130		7801131			
			Price			40,50	43,70	53,00		62,30			
MC089	WB10TG	with Corner Radius	Article No.			7430588	7430589	7430760		7430761			
			Price			45,00	48,50	58,90		69,20			
MC111	WJ30TF	no Corner Radius	Article No.			6799291	6799292	6799293		6799295		6799296	
			Price			21,85	23,53	28,60		33,60		42,00	
MC112	WJ30TF	no Corner Radius	Article No.			6799299	6799310	6799312		6799315			
			Price			21,85	23,53	28,60		33,60			
MC112	WJ30TF	with Corner Radius	Article No.			6799298		6799313		6799316			
			Price			25,70		33,60		39,50			
MC122	WJ30TF	no Corner Radius	Article No.			6799318	6799319	6799320		6799322		6799323	6799324
			Price			21,85	23,53	28,60		33,60		42,00	53,80
MC128	WJ30TF	no Corner Radius	Article No.			8054700	8054701	8054702		8054703		8054704	8054705
			Price			31,70	34,10	41,50		48,80		60,90	78,00
MC128	WJ30TF	with Corner Radius	Article No.			8054706	8054707	8054708		8054709		8054710	
			Price			37,30	40,10	48,80		57,30		71,60	
MC129	WJ30TF	no Corner Radius	Article No.			7124070	7124071	7124072		7124073		7124074	
			Price			30,60	32,90	40,00		47,10		58,80	
MC166	WJ30UU	with Corner Radius	Article No.					8056191		8056192		8056193	
			Price					34,10		40,00		50,10	
MC183	WB10TG	no Corner Radius	Article No.			7430764	7430765	7430766		7430767			
			Price			38,60	41,60	50,40		59,30			
MC187	WB10TG	no Corner Radius	Article No.			7430769	7430800	7430801		7430802		7430803	7430804
			Price			38,60	41,60	50,40		59,30		74,20	94,90
MC187	WB10TG	with Corner Radius	Article No.			7430806	7430807	7430808					
			Price			45,40	48,90	59,30					

* Please note: for inch solid carbide endmills are valid the same prices of the corresponding metric solid carbide endmills
Example: AH4034217 same price as H4034217
[1] High-Performance Micro Drills minimum order quantity 5 pieces
[2] The diameter of the countersink step is required for calculating the price

EURO				Diameter Range (Dc)										
Product Family	Coating	Technical Information	Net-price / piece	2,00–2,99	3,00–6,00	6,01–8,00	8,01–10,00	10,01–12,00	12,01–14,00	14,01–16,00	16,01–18,00	18,01–20,00	20,01–25,00
MC213	WJ30TF	no Corner Radius	Article No.			6799326	6799327			6799332			
			Price			21,85	23,53			33,60			
MC213	WJ30TF	with Corner Radius	Article No.			6799325	6799328	6799330					
			Price			25,70	27,70	33,60					
MC216	WJ30TF	no Corner Radius	Article No.			6799334	6799335	6799336		6799338		6799339	
			Price			21,85	23,53	28,60		33,60		42,00	
MC230	WK40TF	no Corner Radius	Article No.			8056195	8056196	8056197		8056198		8056199	8056300
			Price			21,85	23,53	28,60		33,60		42,00	53,80
MC230	WK40TF	with Corner Radius	Article No.			8056301	8056302	8056303		8056304		8056305	8056306
			Price			25,70	27,70	33,70		39,50		49,40	63,30
MC232	WJ30ED	no Corner Radius	Article No.			7106775	7106776	7106777		7106778		7106779	
			Price			19,67	21,18	25,70		30,20		37,80	
MC232	WJ30ED	with Corner Radius	Article No.			7673269	7673400	7673401		7673402		7673403	
			Price			21,63	23,30	28,30		33,30		41,60	
MC233	WK40TF	no Corner Radius	Article No.			8479233	8479234	8479235		8479236		8479238	8467011
			Price			21,85	23,53	28,60		33,60		60,90	78,00
MC251	WK40RC	no Corner Radius	Article No.			6800110	6800111	6800112		6800113		6800114	
			Price			29,50	31,80	38,60		45,40		56,70	
MC251	WK40RC	with Corner Radius	Article No.			6800115	6800116	6800117		6800118		6800119	
			Price			34,70	37,40	45,40		53,40		66,70	
MC267	WJ30UU	no Corner Radius	Article No.			8056307	8056308	8056309		8056310		8056311	
			Price			16,39	17,65	21,43		25,20		31,50	
MC267	WJ30UU	with Corner Radius	Article No.			8056312	8056313	8056314		8056315		8056316	
			Price			19,28	20,76	25,20		29,70		37,10	
MC267	WJ30CA	with Corner Radius	Article No.			8056317	8056318	8056319		8056320		8056321	
			Price			25,70	27,70	33,60		39,50		49,40	
MC268	WJ30UU	no Corner Radius	Article No.			8213866	8213867	8213868		8213869		8213970	8213971
			Price			16,39	17,65	21,43		25,20		31,50	40,30
MC268	WJ30UU	with Corner Radius	Article No.			8213972	8213973	8213974		8213975		8213976	8213977
			Price			19,28	20,76	25,20		29,70		37,10	47,50
MC319	WK40TF	no Corner Radius	Article No.			7503725	7503726	7503727		7503728		7503729	7503760
			Price			24,09	25,90	31,50		37,10		46,30	59,30
MC320	WK40TF	no Corner Radius	Article No.			7503812	7503813	7503814		7503815		7503816	7503817
			Price			24,09	25,90	31,50		37,10		46,30	59,30
MC321	WJ30TF	no Corner Radius	Article No.			7124075	7124076	7124077					
			Price			21,85	23,53	28,60					
MC322	WJ30TF	no Corner Radius	Article No.			6799340	6799341	6799342		6799343		6961623	
			Price			21,85	23,53	28,60		33,60		42,00	
MC324	WJ30TF	no Corner Radius	Article No.			7124079	7124080	7124082		7124084		7124086	
			Price			21,85	23,53	28,60		33,60		42,00	
MC324	WJ30TF	with Corner Radius	Article No.					7124081		7124083		7124085	
			Price					33,60		39,50		49,40	
MC326	WK40TF	no Corner Radius	Article No.			6717227	6717228	6717229		6717251		6717252	7123666
			Price			27,30	29,40	35,70		42,00		52,50	67,20
MC326	WK40TF	with Corner Radius	Article No.			6717253	6717254	6717255		6717257		6717258	
			Price			32,20	34,60	42,00		49,40		61,80	
MC341	WK40TZ	no Corner Radius	Article No.			7123667	7123668	7123669		7123760		7123761	
			Price			32,20	34,60	42,00		49,40		61,80	
MC377	WK40EA	no Corner Radius	Article No.			8055293	8055294	8055295					
			Price			21,85	23,53	28,60					
MC377	WK40EA	with Corner Radius	Article No.			8055296	8055297	8055298		8055299		8055300	8055301
			Price			25,70	27,70	33,70		39,50		49,40	63,30
MC388	WB10TG	no Corner Radius	Article No.			7430813	7430814	7430815					
			Price			27,30	29,40	35,70					

* Please note: for inch solid carbide endmills are valid the same prices of the corresponding metric solid carbide endmills
Example: AH4034217 same price as H4034217
[1] High-Performance Micro Drills minimum order quantity 5 pieces
[2] The diameter of the countersink step is required for calculating the price

EURO				Diameter Range (Dc)									
Product Family	Coating	Technical Information	Net-price / piece	2,00–2,99	3,00–6,00	6,01–8,00	8,01–10,00	10,01–12,00	12,01–14,00	14,01–16,00	16,01–18,00	18,01–20,00	20,01–25,00
MC388	WB10TG	with Corner Radius	Article No.			7430817	7430818	7430819					
			Price			32,20	34,60	42,00					
MC413	WJ30TF	Ballnose	Article No.			7124087	7124088	7124089		7124090			
			Price			29,60	31,80	38,70		45,50			
MC416	WJ30TF	Ballnose	Article No.			7124091	7124092	7124093		7124094		7124095	
			Price			29,60	31,80	38,70		45,50		56,90	
MC482	WB10TG	Ballnose	Article No.			7430831	7430832	7430833		7430834			
			Price			35,40	38,10	46,20		54,40			
MC500	WJ30TF	no Corner Radius	Article No.			7124096	7124097						
			Price			25,70	30,80						
MC501	WJ30TF	no Corner Radius	Article No.			7124098	7124099	7124100					
			Price			25,70	30,80	37,00					
MC502	WJ30TF	no Corner Radius	Article No.				7124101						
			Price				30,80						
MC503	WJ30TF	with Corner Radius	Article No.			7124102							
			Price			34,70							
MC504	WJ30TF	no Corner Radius	Article No.			7124103	7124104	7124105					
			Price			44,50	48,00	58,30					
MC716	WJ30TF	no Corner Radius	Article No.			7124106	7124107	7124108		7124109		7124110	
			Price			22,94	24,73	30,00		35,30		44,10	
MC726	WK40TF	with Corner Radius	Article No.			6717259	6717260	6717261		6717263			
			Price			28,90	31,20	37,80		44,50			
MD025	WJ30RA	with Corner Radius	Article No.			7801134	7801135	7801136		7801137			
			Price			56,70	61,10	74,20		87,20			
MD025	WJ30RD	with Corner Radius	Article No.			7801138	7801139	7801140		7801141			
			Price			56,70	61,10	74,20		87,20			
MD128	WJ30RA	no Corner Radius	Article No.			8055229	8055260	8055261		8055262		8055263	8055264
			Price			38,00	41,00	49,70		58,50		73,10	93,60
MD128	WJ30RA	with Corner Radius	Article No.			8055223	8055224	8055225		8055226		8055227	8055228
			Price			44,70	48,20	58,60		68,80		86,00	110,00
MD128	WJ30RD	no Corner Radius	Article No.			8055229	8055260	8055261		8055262		8055263	8055264
			Price			38,00	41,00	49,70		58,50		73,10	93,60
MD128	WJ30RD	with Corner Radius	Article No.			8055223	8055224	8055225		8055226		8055227	8055228
			Price			44,70	48,20	58,60		68,80		86,00	110,00
MD133	WJ30RA	with Corner Radius	Article No.			7203584	7203585	7203586		7203587		7203588	
			Price			34,70	37,40	45,40		53,40		66,70	
MD133	WJ30RD	with Corner Radius	Article No.			7203589	7203880	7203881		7203882		7203883	
			Price			34,70	37,40	45,40		53,40		66,70	
MD173	WJ30EN	no Corner Radius	Article No.			8506040				8206553		8206554	8206555
			Price							58,50		73,10	93,60
MD173	WJ30EN	with Corner Radius	Article No.			8205534	8205535	8205536		8205537		8205538	8205539
			Price			44,70	48,20	58,60		68,80		86,00	110,00
MD177	WJ30EN	no Corner Radius	Article No.			8206846	8206841	8206845		8206842		8206843	8206844
			Price			38,00	41,00	49,70		58,50		73,10	93,60
MD177	WJ30EN	with Corner Radius	Article No.			8205108	8205109	8205530		8205531		8205532	8205533
			Price			44,70	48,20	58,60		68,80		86,00	110,00
MD265	WJ30UU	with Corner Radius	Article No.							8213860		8213861	8213862
			Price							40,00		50,10	64,10
MD265	WJ30DD	with Corner Radius	Article No.							8213863		8213864	8213865
			Price							53,40		66,70	85,40
MD266	WJ30UU	no Corner Radius	Article No.			8056322	8056323	8056324		8056325		8056326	
			Price			22,13	23,84	28,90		34,00		42,60	
MD266	WJ30UU	with Corner Radius	Article No.			8056327	8056328	8056329		8056330		8056331	8056494
			Price			26,00	28,00	34,10		40,00		50,10	64,10

* Please note: for inch solid carbide endmills are valid the same prices of the corresponding metric solid carbide endmills
Example: AH4034217 same price as H4034217
[1)] High-Performance Micro Drills minimum order quantity 5 pieces
[2)] The diameter of the countersink step is required for calculating the price

EURO				Diameter Range (Dc)									
Product Family	Coating	Technical Information	Net-price / piece	2,00–2,99	3,00–6,00	6,01–8,00	8,01–10,00	10,01–12,00	12,01–14,00	14,01–16,00	16,01–18,00	18,01–20,00	20,01–25,00
MD340	WK40TP	no Corner Radius	Article No.			8208956	8208957	8208958		8208959		8208970	8208971
			Price			26,20	28,20	34,30		40,30		50,40	64,50
MD340	WK40TP	with Corner Radius	Article No.			8208972	8208973	8208974		8208975		8208976	
			Price			30,80	33,20	40,30		47,40		59,30	
MD344	WK40TP	with Corner Radius	Article No.			8208953	8208871	8208872		8208873		8208874	
			Price			30,80	33,20	40,30		47,40		59,30	
MD377	WK40TZ	with Corner Radius	Article No.			8055307	8055308	8055309		8055350		8055351	8055352
			Price			30,80	33,20	40,30		47,40		59,30	75,90
MD838	WJ30RA	with Corner Radius	Article No.			8366257	8366259	8366793		8366797			
			Price			33,90	36,50	44,40		52,20			
MD838	WJ30RD	with Corner Radius	Article No.			8366258	8366790	8366794		8366798			
			Price			33,90	36,50	44,40		52,20			

Reaming / SC

F2481	uncoated		Article No.		7430651	7430652	7430653	7430654	7430655	7430656	7430657	7430658	
			Price		32,70	35,70	38,60	41,60	44,60	47,60	50,50	53,50	
F2481TMS	TMS		Article No.		7430659	7430690	7430691	7430692	7430693	7430694	7430695	7430696	
			Price		39,20	42,80	46,40	49,90	53,50	57,10	60,60	64,20	
F2482	uncoated		Article No.		7430651	7430652	7430653	7430654	7430655	7430656	7430657	7430658	
			Price		32,70	35,70	38,60	41,60	44,60	47,60	50,50	53,50	
F2482TMS	TMS		Article No.		7430659	7430690	7430691	7430692	7430693	7430694	7430695	7430696	
			Price		39,20	42,80	46,40	49,90	53,50	57,10	60,60	64,20	

Thread Milling / SC

H5033008	TAX		Article No.			6799056	6799057	6799058					
			Price			34,50	39,60	44,80					
H5055016	TICN		Article No.			6799066	6799067	6799068		6799069			
			Price			34,50	39,60	44,80		55,10			
H5055116	TICN		Article No.			6799066	6799067	6799068		6799069			
			Price			34,50	39,60	44,80		55,10			
H5133008	TAX		Article No.				6799057	6799058					
			Price				39,60	44,80					
H5150106	TICN		Article No.				6799051	6799052		6799053			
			Price				39,60	44,80		55,10			
TC610	WB10RD		Article No.			6799089	6799078	6799080	6799082	6799084			
			Price			34,50	39,60	44,80	50,00	55,10			
TC610	WJ30RC		Article No.			6799090	6799079	6799081	6799083	6799085		6799087	
			Price			34,50	39,60	44,80	50,00	55,10		60,30	
TC611	WB10RD		Article No.			6799100	6799091	6799093		6799096			
			Price			34,50	39,60	44,80		55,10			
TC611	WJ30RC		Article No.			6799101	6799092	6799094		6799097		6799099	
			Price			34,50	39,60	44,80		55,10		60,30	
TC620	WB10TJ		Article No.			7672421	7672422	7672423	7672424			7672425	
			Price			31,00	35,70	40,30	49,60			54,30	

* Please note: for inch solid carbide endmills are valid the same prices of the corresponding metric solid carbide endmills
Example: AH4034217 same price as H4034217
[1] High-Performance Micro Drills minimum order quantity 5 pieces
[2] The diameter of the countersink step is required for calculating the price

Milling PCD

EURO

Product Family	Coating	Technical Information	Net-price / piece	
FR733	WCD10	Cartridges for F4050	Article No.	759
			Price	51,50
FR734	WCD10		Article No.	759
			Price	51,50
FR735	WCD10		Article No.	759
			Price	51,50
FR733	WCD10	Cartridges for F4050 (incl. assembling milling cutter, adjustement of axial run out and pre balancing)	Article No.	758
			Price	63,00
FR734	WCD10		Article No.	758
			Price	63,00
FR735	WCD10		Article No.	758
			Price	63,00

_Walter Multiply

Walter Toolstation – Preisinformationen / Price information / Informations sur les tarifs / Informazioni su prezzi / Informaciones de precio / Prijsinformatie

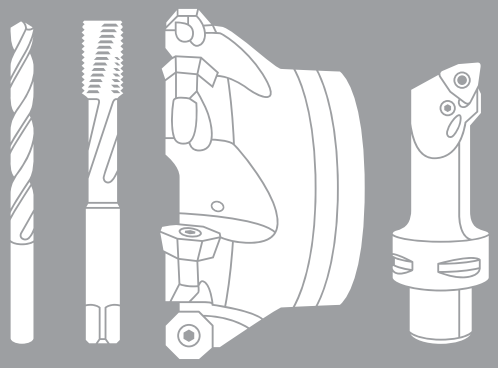

Walter Multiply Toolstation

Angebot, Preis und Lieferzeiten / Range, price and delivery times

Hardware-Portfolio/Hardware portfolio

EURO				
	Durchschnittliche Lieferzeit/ Average delivery time	**Nettopreis / Net-price**	**Haupt/Preis/ Main/price**	**Aux/Preis/ Aux/price**
Toolstation C-Line TX750	6-8 Wochen / 6-8 weeks	Artikel-Nr./Article No.	7626808	7900650
		Preis/Price	25.463,00	23.338,00
Toolstation C-Line VX500	6-8 Wochen / 6-8 weeks	Artikel-Nr./Article No.	7973992	7973995
		Preis/Price	18.400,00	16.275,00
Toolstation D-Line	9-10 Wochen / 9-10 weeks	Artikel-Nr./Article No.	individuell pro Konfiguration/individual per configuration	
		Preis/Price	pro Konfiguration	per configuration
Toolstation S-Line	8 Wochen / 8 weeks	Artikel-Nr./Article No.	7935875	7935921
		Preis/Price	8.125,00	6.375,00

Software/Software

EURO					
Installationstyp/ Installation Type	**Hilfsgerät/ Aux unit**	**Offene Lagerung / Open storage**	**Nettopreis / Net-price**	**Gebührenobergrenze/ Preis pro Jahr/ Fee cap/price per year**	**Haupteinheit/ Preis pro Jahr/ Main unit/price per year**
Wolke / Cloud	kostenlos/free	in der Haupteinheit enthalten/included in main unit	Artikel-Nr./Article No.		7972873
			Preis/Price	2.250,00 pro Endkundenstandort/ per end customer location	750,00

Besondere Verkaufsbedingungen

- Sobald die Hardware-Ausrüstung installiert ist, besteht eine Garantie gegen technische Mängel für 12 Monate. Die Garantie erstreckt sich nicht auf Schäden, die durch Unfall, Missbrauch oder unsachgemäßen Gebrauch verursacht wurden.

- Die Verarbeitung personenbezogener Daten auf diesem Dienst erfolgt in Einhaltung der EU-Verordnung zur allgemeinen Datenverarbeitung. Jede Der Benutzer wird aufgefordert, die allgemeine Nutzungsrichtlinie zu lesen und zu akzeptieren unter die erste Anmeldung.

- Incoterms
  - Walter Multiply Toolstation C-Line: FCA
  - Walter Multiply Toolstation D-Line: FCA
  - Walter Multiply Toolstation S-Line: FCA

- Die Liste kann in jeder Beschreibung geändert werden und unterliegt außerdem Druckfehler in den aufgeführten Spezifikationen und Preisen. Solche Änderungen oder Fehler stellen keinen Grund für Ansprüche irgendwelcher Art dar.

**Die Preise sind ab Januar 2024 gültig und treten an die Stelle
die früheren Preislisten.**

Specific sales conditions

- Once installed, the hardware equipment is warrantied against technical defects for 12 months. The warranty does not cover any damage caused by accident, misuse or abuse.

- The processing of personal data on this service is executed in compliance with EU General Data Processing Regulation. Each user gets prompted to read and accept the general use policy at the first login.

- Incoterms
  - Walter Multiply Toolstation C-Line: FCA
  - Walter Multiply Toolstation D-Line: FCA
  - Walter Multiply Toolstation S-Line: FCA

- The list is subject to change of any description and also to printing errors in the listed specifications and prices. Any such changes or errors do not constitute ground for claims of any kind.

The prices are valid from January 2024 and supersede the previous price lists.

Walter Multiply Toolstation

Gamme, prix et délais de livraison / Gamma di utensili, prezzo e tempi di consegna

Portefeuille des équipements/Portafoglio hardware

EURO				
	Délai moyen de livraison/ Tempo medio di consegna	**Prix net/ Prezzo netto**	**Maitre/prix/ Principale/prezzo**	**Auxiliaire/prix/ Aggiuntiva/prezzo**
Toolstation C-Line TX750	6 à 8 semaines / 6-8 settimane	Article n°./Articolo n.	7626808	7900650
		Prix/Prezzo	25.463,00	23.338,00
Toolstation C-Line VX500	6 à 8 semaines / 6-8 settimane	Article n°./Articolo n.	7973992	7973995
		Prix/Prezzo	18.400,00	16.275,00
Toolstation D-Line	9 à10 semaines / 9-10 settimane	Article n°./Articolo n.	individuel par configuration/individuale per configurazione	
		Prix/Prezzo	par configuration	per configurazione
Toolstation S-Line	8 semaines / 8 settimane	Article n°./Articolo n.	7935875	7935921
		Prix/Prezzo	8.125,00	6.375,00

Logiciels/Software

EURO					
Type d'installation/ Tipo di installazione	**Unité auxiliaire/ Unità aggiuntiva**	**Stockage ouvert / Stock virtuale**	**Prix net / Prezzo netto**	**Plafonnement des frais/ prix annuel/ Tassa d'utilizzo annuale**	**Unité principale/prix annuel/ Unità principale/prezzo all'anno**
Cloud /Cloud	Gratuit/Gratuito	inclus dans l'unité principale/ included in main unit	Article n°./Articolo n.		7972873
			Prix/Prezzo	2.250,00 par emplacement du client final/per sede del cliente finale	750,00

Conditions spécifiques de vente

- Une fois installé, l'équipement matériel est garanti contre les défauts techniques pendant 12 mois. La garantie ne couvre pas les dommages causés par un accident, une mauvaise utilisation ou un abus.

- Le traitement des données à caractère personnel dans le cadre de ce service est effectué en conformité avec le règlement général sur le traitement des données de l'UE. Chaque utilisateur est invité à lire et à accepter la politique générale d'utilisation à l'adresse suivante la première connexion.

- Incoterms
  - Walter Multiply Toolstation C-Line : FCA
  - Walter Multiply Toolstation D-Line : FCA
  - Walter Multiply Toolstation S-Line : FCA

- La liste est susceptible de changer de description, des erreurs d'impression peuvent exister dans les spécifications et les prix indiqués. Ces modifications ou erreurs ne constituent pas un motif de réclamation de quelque nature que ce soit.

Les prix sont valables à partir de Janvier 2024 et remplacent les listes de prix précédentes.

Condizioni di vendita specifiche

- Una volta installata, l'attrezzatura hardware è garantita contro difetti tecnici per 12 mesi. La garanzia non copre alcun danno causato da incidente, uso improprio o abuso.

- Il trattamento dei dati personali in questo servizio viene eseguito in conformità al regolamento generale dell'UE sul trattamento dei dati. Ogni utente viene richiesto di leggere e accettare la politica generale di utilizzo il primo login.

- Incoterms
  - Walter Multiply Toolstation C-Line: FCA
  - Walter Multiply Toolstation D-Line: FCA
  - Walter Multiply Toolstation S-Line: FCA

- L'elenco è soggetto a modifiche di qualsiasi descrizione e anche di errori di stampa nelle specifiche e nei prezzi elencati. Qualsiasi modifica o errori non costituiscono motivo di reclamo di alcun tipo.

I prezzi sono validi dal Gennaio 2024 e sostituiscono i listini prezzi precedenti.

Walter Multiply Toolstation

Gama, precios y plazos de entrega / Assortiment, prijs en levertijden

Hardware portfolio/Hardware portfolio

EURO				
	Tiempo medio de entrega/ Gemiddelde levertijd	**Precio neto / Nettoprijs**	**Principal/precio/ Hoofd/prijs**	**Auxiliar/precio/ Aux/prijs**
Toolstation C-Line TX750	6-8 semanas / 6-8 weken	Artículo No./Artikel nr.	7626808	7900650
		Preis/Price	25.463,00	23.338,00
Toolstation C-Line VX500	6-8 semanas / 6-8 weken	Artículo No./Artikel nr.	7973992	7973995
		Precio/Prijs	18.400,00	16.275,00
Toolstation D-Line	9-10 semanas / 9-10 semanas	Artículo No./Artikel nr.	individual por configuración/individueel per configuratie	
		Precio/Prijs	por configuración	per configuratie
Toolstation S-Line	8 semanas / 8 weken	Artículo No./Artikel nr.	7935875	7935921
		Precio/Prijs	8.125,00	6.375,00

Software/Software

EURO					
Tipo de instalación/ Type installatie	**Unidad auxiliar/ Aux-eenheid**	**Almacenamiento abierto / Open opslagruimte**	**Precio neto / Nettoprijs**	**Precio máximo/precio por año/Tariefplafond/ prijs per jaar**	**Unidad principal/precio por año/Hoofdeenheid/ prijs per jaar**
Nube /Wolk	Gratuito/Gratis	incluido en la unidad principal/opgenomen in de hoofdeenheid	Artículo No./Artikel nr.		7972873
			Precio/Prijs	2.250,00 por ubicación del cliente final/ per eindklantlocatie	750,00

Condiciones de venta específicas

- Una vez instalado, el equipo de hardware está garantizado contra defectos técnicos durante 12 meses. La garantía no cubre ningún daño causados por accidente, mal uso o abuso.

- El tratamiento de los datos personales en este servicio se realiza en cumplimiento del Reglamento General de Procesamiento de Datos de la UE. Cada uno se le pide al usuario que lea y acepte la política general de uso en el primer acceso.

- Incoterms
  - Walter Multiply Toolstation C-Line: FCA
  - Walter Multiply Toolstation D-Line: FCA
  - Walter Multiply Toolstation S-Line: FCA

- La lista está sujeta a cambios de cualquier descripción y también a errores de impresión en las especificaciones y precios listados. Cualquiera de estos cambios o errores no constituyen motivo de reclamación de ningún tipo.

Los precios son válidos a partir de Enero de 2024 y sustituyen las listas de precios anteriores.

Specifieke verkoopsvoorwaarden

- Eenmaal geïnstalleerd is de hardware gegarandeerd tegen technische defecten voor 12 maanden. De garantie dekt geen schade veroorzaakt door een ongeluk, misbruik of verkeerd gebruik.

- De verwerking van persoonsgegevens op deze dienst wordt uitgevoerd in naleving van de algemene gegevensverwerkingsverordening van de EU. Elke gebruiker wordt gevraagd om het algemene gebruiksbeleid te lezen en te aanvaarden op de eerste login.

- Incoterms
  - Walter Multiply Toolstation C-Line: FCA
  - Walter Multiply Toolstation D-Line: FCA
  - Walter Multiply Toolstation S-Line: FCA

- De lijst is onder voorbehoud van wijziging van elke beschrijving en ook van drukfouten in de genoemde specificaties en prijzen. Eventuele dergelijke wijzigingen of fouten vormen geen grond voor claims van welke aard dan ook.

De prijzen zijn geldig vanaf Januari 2024 en hebben voorrang op de vorige prijslijsten.

_Walter

Training - Angebot und Preis / Training - Offer and Price / Formation - Offre et prix / Corsi di formazione - Offerta e Prezzo / Formación - Oferta y precio / Opleidingen - Offerte en prijs

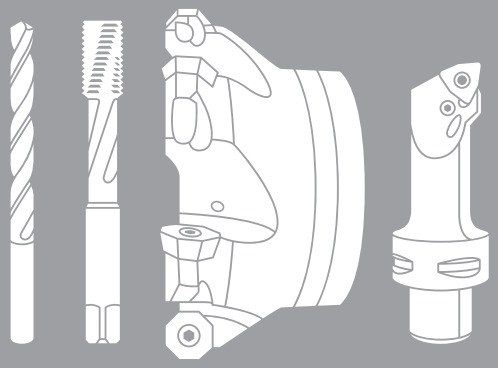

Training

Angebot und Preis:

Artikel-Nr.	Beschreibung	Gebühren
6038984	Seminargebühr	150 €
6038967	Kundenoptimiertes Seminar vor Ort	2.000 €
6103288	Seminar im Walter Technology Center	Je nach Modul

Stornierung:
Bei einer Stornierung der Anmeldung gelten folgende Fristen und Gebühren: ab 14 Tage vor Seminarbeginn berechnen wir eine Stornogebühr von 50%. Die Rechnung erhalten Sie per Post und ist 1 Woche nach Erhalt ohne Abzüge zu zahlen.

Teilnahmebedingungen:
Alle Preise verstehen sich zuzüglich gesetzlicher Mehrwertsteuer. Die Teilnahmegebühr umfasst die Tagungskosten, Mittag- und Abendessen, Kaffeepausen sowie die Schulungsunterlagen. Die Seminare beginnen jeweils um 8.30 Uhr und enden gegen 17.30 Uhr.

Anmeldeschluss:
Bitte melden Sie sich mit dem entsprechenden Formular an. Aufgrund der pro Veranstaltung begrenzten Teilnehmerzahl werden die Anmeldungen in der Reihenfolge des Eingangs berücksichtigt. Die Seminare finden in Tübingen statt. Der Anmeldeschluss ist 4 Wochen vor Beginn des Seminars. Bei Absage der Veranstaltung seitens der Walter AG bestehen keine Ansprüche.

Unterkunft:
Preise für Übernachtungen sind in den Seminargebühren nicht enthalten. Gerne unterstützen wir Sie bei der Hotelbuchung.

Besondere Verkaufsbedingungen
Die Verarbeitung personenbezogener Daten in diesem Dienst erfolgt in Übereinstimmung mit der EU-Verordnung zur allgemeinen Datenverarbeitung. Jeder Nutzer wird bei der ersten Anmeldung aufgefordert, die allgemeinen Nutzungsbedingungen zu lesen und zu akzeptieren.

Änderungen jeglicher Art von Beschreibungen sowie Druckfehler in den aufgeführten Spezifikationen und Preisen bleiben vorbehalten. Derartige Änderungen oder Irrtümer begründen keine Ansprüche irgendwelcher Art.

Die Preise sind ab Januar 2024 gültig und ersetzen die bisherigen Preislisten.

Training

Offer and Price

Article No	Description	Fees
6038984	Training fee	150 €
6038967	Customised Training on Site	2.000 €
6103288	Training at Walter Technology Center	Depending on the Module

Cancellation:
If the registration is canceled, the following deadlines and fees apply: from 14 days before the start of the seminar, we charge a cancellation fee of 50%. You will receive the invoice by mail and it must be paid 1 week after receipt without deductions.

Conditions of the participation:
All prices are exclusive of statutory VAT. The participation fee includes the conference costs, lunch and dinner, coffee breaks and the training documents. The seminars start at 8.30 a.m. and end around 5.30 p.m.

Registration deadline:
Please register using the corresponding form. Due to the limited number of participants per event, registrations will be considered in the order in which they are received. The seminars take place in Bromsgrove. The registration deadline is 4 weeks before the start of the seminar. If the event is canceled by Walter GB LTD., there are no claims.

Accommodation:
Prices for overnight stays are not included in the seminar fees. We would be happy to help you book a hotel.

Specific Sales Conditions
The processing of personal data on this service is executed in compliance with EU General Data Processing Regulation. Each user gets prompted to read and accept the general use policy at the first login.

The list is subject to change of any description and also to printing errors in the listed specifications and prices. Any such changes or errors do not constitute ground for claims of any kind.

The prices are valid from January 2024 and supersede the previous price lists.

Formation

Offre et prix

Article No	Description	Frais
6038984	Frais de formation	150 €
6038967	Formation personnalisée sur site	2.000 €
6103288	Formation au Walter Technology Center	En fonction du module

Annulation :
En cas d'annulation de l'inscription, les délais et frais suivants s'appliquent : à partir de 14 jours avant le début du séminaire, nous facturons des frais d'annulation de 50%. La facture vous sera envoyée par courrier et devra être réglée sans déduction une semaine après réception.

Conditions de participation :
Tous les prix s'entendent hors TVA légale. Les frais de participation comprennent les frais de conférence, le déjeuner et le dîner, les pauses café et les documents de formation. Les séminaires commencent à 8 h 30 et se terminent vers 17 h 30.

Date limite d'inscription :
Veuillez vous inscrire en utilisant le formulaire correspondant.
En raison du nombre limité de participants par événement, les inscriptions seront prises en compte dans l'ordre de leur réception. Les séminaires ont lieu à Tübingen. Le délai d'inscription est de 4 semaines avant le début du séminaire. Si l'événement est annulé par Walter AG, il n'y a aucune réclamation possible.

Hébergement :
Les prix des nuitées ne sont pas inclus dans les frais de séminaire. Nous serions heureux de vous aider à réserver un hôtel.

Conditions spécifiques de vente
Le traitement des données personnelles sur ce service est exécuté en conformité avec le règlement général de l'UE sur le traitement des données. Chaque utilisateur est invité à lire et à accepter la politique d'utilisation générale lors de la première connexion.

La liste est sujette à des changements de toute nature ainsi qu'à des erreurs d'impression dans les spécifications et les prix indiqués. Ces modifications ou erreurs ne constituent pas un motif de réclamation de quelque nature que ce soit.

Les prix sont valables à partir de Janvier 2024 et remplacent les listes de prix précédentes.

Corsi di formazione

Offerta e Prezzo

Article No	Descrizione	Tasse
6038984	Tassa di formazione	150 €
6038967	Formazione personalizzata in loco	2.000 €
6103288	Formazione al Walter Technology Center	A seconda del modulo

Cancellazione:
Se l'iscrizione viene annullata, si applicano le seguenti scadenze e tariffe: a partire da 14 giorni prima dell'inizio del seminario, addebitiamo una penale di cancellazione di 50%. Riceverete la fattura per posta e dovrà essere pagata una settimana dopo il ricevimento, senza riduzioni.

Condizioni di partecipazione:
Tutti i prezzi sono al netto dell'IVA. La quota di partecipazione comprende i costi della conferenza, il pranzo e la cena, le pause caffè e la documentazione. I seminari iniziano alle 8.30 e terminano verso le 17.30.

Termine di registrazione:
Si prega di registrarsi utilizzando l'apposito modulo. A causa del numero limitato di partecipanti per ogni evento, le iscrizioni saranno considerate nell'ordine in cui vengono ricevute. I seminari si svolgono a Tubinga. Il termine d'iscrizione è di 4 settimane prima dell'inizio del seminario. L'evento può subire modifiche o cancellazioni da parte di Walter AG, senza possibilità di reclamo.

Alloggio:
I prezzi per i pernottamenti non sono inclusi nella quota del seminario. Saremo lieti di aiutarvi a prenotare un hotel.

Condizioni specifiche di vendita
Il trattamento dei dati personali su questo servizio viene eseguito in conformità con il Regolamento generale sul trattamento dei dati dell'UE. Ad ogni utente viene richiesto di leggere e accettare la politica generale di utilizzo al primo accesso.

L'elenco è soggetto a cambiamenti in caso di errori di stampa nelle descrizioni, specifiche e prezzi. Tali modifiche o errori non costituiscono motivo di reclami di alcun tipo.

I prezzi sono validi da Gennaio 2024 e sostituiscono i listini precedenti.

Formación

Oferta y precio

Article No	Descripción	Tasas
6038984	Tasa de formación	150 €
6038967	Formación personalizada in situ	2.000 €
6103288	Formación en el Walter Technology Center	Según el módulo

Cancelación:
Si se cancela la inscripción, se aplican los siguientes plazos y tasas: a partir de 14 días antes del inicio del seminario, cobramos una tasa de cancelación de 50%. Recibirá la factura por correo y deberá ser abonada 1 semana después de su recepción sin deducciones.

Condiciones de participación:
En los precios no está incluído el IVA reglamentario. La cuota de participación incluye los costes de la conferencia, el almuerzo y la cena, las pausas para el café y los documentos de formación. Los seminarios comienzan a las 8.30 horas y terminan alrededor de las 17.30 horas.

Plazo de inscripción:
Por favor, inscríbase utilizando el formulario correspondiente. Debido al número limitado de participantes por evento, las inscripciones se considerarán en el orden en que se reciban. Los seminarios tienen lugar en Tübingen. La fecha límite de inscripción es 4 semanas antes del inicio del seminario. Si el evento es cancelado por Walter AG, no hay posibilidad de reclamaciones.

Alojamiento:
Los precios de las pernoctaciones no están incluidos en las tarifas del seminario. Estaremos encantados de ayudarle a reservar un hotel.

Condiciones específicas de venta
El tratamiento de datos personales en este servicio se realiza de acuerdo con el Reglamento General de Tratamiento de Datos de la UE. A cada usuario se le pide que lea y acepte la política general de uso en el primer inicio de sesión.

La lista está sujeta a cambios de cualquier tipo y también a errores de impresión en las especificaciones y los precios enumerados. Dichos cambios o errores no constituyen motivo de reclamación de ningún tipo.

Los precios son válidos a partir de Enero de 2024 y sustituyen a las listas de precios anteriores.

Opleidingen

Offerte en prijs

Article No	Beschrijving	Vergoedingen
6038984	Opleidingskosten	150 €
6038967	Opleidingen op maat ter plaatse	2.000 €
6103288	Opleiding bij Walter Technology Center	Afhankelijk van de module

Annulering:
Bij annulering van de inschrijving gelden de volgende termijnen en kosten: vanaf 14 dagen voor aanvang van het seminar berekenen wij een annuleringskost van 50%. De factuur ontvangt u per post en dient 1 week na ontvangst zonder aftrek te worden voldaan.

Voorwaarden voor deelname:
Alle prijzen zijn exclusief de wettelijke BTW. De deelnameprijs omvat de conferentiekosten, lunch en diner, koffiepauzes en de opleidingsdocumenten. De seminars beginnen om 8.30 uur en eindigen rond 17.30 uur.

Uiterste datum voor inschrijving:
Inschrijven kan door middel van overeenkomstige formulier. Wegens het beperkte aantal deelnemers per evenement zullen de inschrijvingen in aanmerking worden genomen in de volgorde waarin zij zijn ontvangen. De seminars vinden plaats in Tübingen. De uiterste inschrijfdatum is 4 weken voor aanvang van het seminar. Bij annulering van het evenement door Walter AG zijn er geen aanspraken mogelijk.

Accommodatie:
De prijzen voor overnachtingen zijn niet inbegrepen in de kosten voor het seminar. Wij helpen u graag bij het boeken van een hotel.

Specifieke verkoopvoorwaarden
De verwerking van persoonsgegevens op deze dienst wordt uitgevoerd in overeenstemming met de Algemene Verordening Gegevensverwerking van de EU. Elke gebruiker wordt gevraagd het algemene gebruiksbeleid te lezen en te aanvaarden bij de eerste aanmelding.

De lijst is onderhevig aan wijzigingen van welke aard dan ook en ook aan drukfouten in de vermelde specificaties en prijzen. Dergelijke wijzigingen of fouten vormen geen grond voor claims van welke aard dan ook.

De prijzen zijn geldig vanaf Januari 2024 en vervangen de vorige prijslijsten.

_Walter

Trademarks und Produktnamen / Trademarks and Produktnames / Marques déposées et noms de produits / Marcahi registrati / Marcas y nomenclatura de producto / Handelsmerken en productnamen

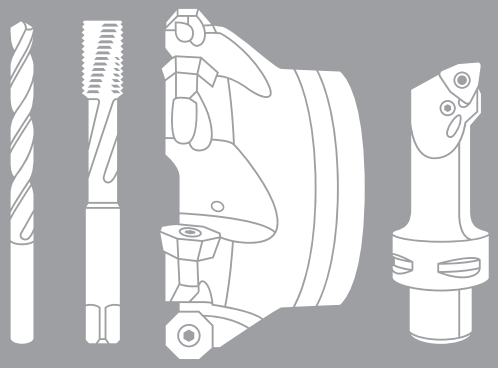

WALTER PROTOTYP

AMB Inox
20844
HGB Inox
30063
HGB Ti
30016
KMB H
20160
27160
KMB Ms
20165
24165
24195
KMB WST
20167
Paradur® AP
20312
20362
Paradur® Combi
20417
20467
Paradur® Eco CI
AE2231416
AE2236416
AE2331416
AE2336416
E20314
E2031406
E2031416
E2031436
E2031446
E2031456
E2031466
E20364
E2036406
E2036416
E2036436
E2036446
E2036456
E2036466
E21364
E2136406
E2136416
E2136466
E22314
E22364
E23314
E23364
E24364
E2436406
Paradur® Eco Plus
AEP2251302
AEP2251312
AEP2256302
AEP2256312
AEP2351302
AEP2351312
AEP2356302
AEP2356312
EP2051302
EP2051305
EP2051312
EP2051342
EP2051352
EP2051362
EP2051382
EP2053302
EP2053305
EP2056302
EP2056305
EP2056312
EP2056342
EP2056352
EP2056362
EP2056382
EP2058302
EP2058305
EP2156302
EP2156312
EP2156362
EP2251302
EP2251312
EP2256302
EP2256312
EP2351302
EP2351312
EP2356302
EP2356312
EP2456302
Paradur® Engine
8031310
8036310
8136310
Paradur® FT
20316
Paradur® GG
803141
8031417
8136417
Paradur® H
20311
203115
20361
21311
21361
21368
24167
24361
243612
25167
26167
Paradur® H 24
204107
204607
Paradur® H AZ
40311
Paradur® HN
213614
Paradur® HS
80311
8031106
8031116
81311
8231106
8331106
Paradur® HSC
8041056
8046056
8141056
8146056
Paradur Inox®
25567
2556702
26567
Paradur Inox® 25
2051315
2056315
2156315
2456315
Paradur Inox® 40
255630
Paradur® N
20410
2041006
204105
20411
20430
20460
2046006
204605
20461
20480
21410
21460
2146005
2146006
21480
2148005
22400
22410
22450
22460
23400
23410
23450
23460
24460
25460
26460
80410
8041006
804101
804601
Paradur® NH
2041210
2041215
2046210
2046215
Paradur® Ni
204089
204102
20410206
204104
204602
224102
22410206
224104
224602
22460206
224604
234079
234104
23410406
234579
234604
23460406
25467
2546706
A224003S
A224089S
A224503S
A234000S
A234002S
A234003S
A234502S
A234503S
A234589S
Paradur® Ni 10
204101
2041014
2041015
214101
224101
234101
Paradur® STE
205106
2051062
2056062
2156062
245606
2456062
Paradur® Synchrospeed
S2051302
S2051305
S2051312
S2051315
S2056302
S2056305
S2056312
S2056315
S2156302
S2156305
S2456302
Paradur® Ti
204069
20416
2041606
204164
20466
2046606
21416
21466
224069
22416
224164
22466
224664
234069
23416
234164
234569
23466
234664
A20416S

A2240606S
A224060S
A2240661S
A22406S
A2245606S
A2245661S
A22456S
A2340606S
A234060S
A2340661S
A23406S
A2345606S
A234560S
A2345661S
A23456S

Paradur® Ti Plus

2041663
2046663
2141663
2146663
2340663

Paradur® Uni

7051770
7051773
7051775
7051776
7053770
7056770
7056773
7056775
7056776
7058770
7156770
7456770

Paradur® WLM Synchrospeed

S20516
S2051604

Paradur® X·pert K

AK2231407
AK2236407
K2031407
K2036407

Paradur® X·pert M

M205049
M20513
M2051305
M2051306
M2051332
M20533
M2053306
M205549
M20563
M2056305
M2056306
M2056332
M21513
M2151305
M21563
M2156305
M2158305
M225049
M22513
M2251305
M225532
M225549
M22563
M2256305
M225632
M235049
M23513
M2351305
M23563
M2356305
M24563
M2456305

Paradur® X·pert N

AN20516
AN225069
AN22516
AN235069
N205069
N20516
N205166
N20536
N205569
N20566
N21566
N225069
N22516
N235069
N24566

Paradur® X·pert P

P20509
P205099
P205183
P2051832
P20519
P2051905
P2051935
P205198
P20539
P2053905
P20549
P2054905
P205599
P205683
P2056832
P20569
P2056905
P2056935
P205698
P20589
P2058905
P20599
P2059905
P21519
P215599
P21569
P2156905
P21589
P2158905
P22509
P225099
P22519
P22559
P22569
P235099
P23519
P2351905
P235599
P23569
P2356905
P235692
P24569
P2456905
P265676
P28519
P28569

Paradur® X·pert P AZ

P40519
P40569

Proto·max™ Inox

AH2034217
AH2038217
H2034217
H2038217
H2134217
H2138217
H2EC34217
H2EC38217
H4036217
H4046988
H4135217
H4137217
H4E34217
H4E38217
H8004788

Protocut®

60000
61000
62000
63000
64000

Protocut® Inox

60003

Protodyn® C

D70611
D7061100
D7063100

Protodyn® Eco LM

E2061604
E2066604

Protodyn® S Plus

AP2261705

Protodyn® S Synchrospeed

S2061305
S2061306
S2061345
S2066305
S2066306
S2066345
S2166305

Protodyn® SC

D70617
D7061700
D7063700

Protodyn® SF

D7061706
D7066706
D7166706
D7466706

Protostar®

AH3021138
AH3022118
AH3023418
AH3023518
AH3058318
AH3068118
AH3E21138
AH3E58318
AH602511
AH602551
AH8001118
AH8095118
AH8E11118
H1E01118
H1E12018
H1E58018
H1E58118
H1E58318
H1E58518
H302211
H3023138
H3024148
H302611
H302711
H302731
H3027416
H3027419
H302914
H3029146
H305831
H305851
H3058917
H311701
H311801
H3121138
H3127116
H3E29148
H3E58118
H3E58318
H3E58518
H3E68118
H404491
H4044918
H4044919
H404691
H4046918
H4046919
H4129318
H602111
H602311
H6023114
H602411
H602511
H602551
H602641
H602681
H602881
H608411
H608771
H608871
H618911
H6E2211
H6E2511
H800111

H8001119
H8001919
H8006419
H800891
H8008918
H8011118
H8095919
H8E01118
H8E11118
H901411
H901451

Protostar® Flash

H2EC94717
H3094718
H3094728
H3E93718

Protostar® Qmax

AH3182378
AH3E85378
H3182378
H3183378
H3E82378
H4180378
H4189278

Protostar® Ti

H3183017
H7073417
H7073717

Protostar® Ultra

AH8004128
AH8082228
H4044928
H8004028
H8004728
H8005728
H8005828
H8005928
H8006428
H8015728
H8015828
H8016428
H8074128
H8082228

Protostep Inox

20944
20954

Prototex® Eco Plus

AEP2221002
AEP2226002
AEP2321002
AEP2326002
EP2021302
EP2021305
EP2021342
EP2021382
EP2023302
EP2023305
EP2026302
EP2026305
EP2026342
EP2026382
EP2028302
EP2028305
EP2126302
EP2126342
EP2221302
EP2226302
EP2321302
EP2326302
EP2426302

Prototex® HSC

8021006
8026006
8121006
8126006

Prototex® Megasprint

7021345
7026345

Prototex® OS

20211

Prototex® Sprint

7021365
7021366
7026365
7126365

Prototex® Synchrospeed

S2021302
S2021305
S2026302
S2026305
S2126302
S2126305

Prototex® TiNi

202061
20207
202161
2021616
202661
2026616
212161
21216106
212661
21266106
22207
2220706
222079
22217
2221706
22257
22267
2226706
23207
2320706
232079
23217
2321706
23257
2325706
232579
23267
2326706
A2021760
A2026760
A2220760
A2220766
A222079
A2225760
A2225766
A2320760
A2320766
A232079
A2325760
A2325766
A232579

Prototex® TiNi Plus

2021763
2026763
2121763
2126763
2320763

Prototex® X·pert M

M20213
M2021305
M2021306
M20233
M2023306
M20263
M2026305
M2026306
M203009
M2121305
M21263
M2126305
M2128305
M22213
M2221305
M22263
M2226305
M23213
M2321305
M23263
M2326305
M233009
M24263
M2426305

Prototex® X·pert N

N20219

Prototex® X·pert P

P20200
P20210
P2021005
P202103
P202108
P20230
P2023005
P202603
P202608
P203009
P20310
P2031005
P2031006
P203103
P2031035
P20330
P2033005
P20340
P2034005
P203509
P20360
P2036005
P2036006
P203603
P2036035
P20380
P20390
P2039005
P21210
P212608
P21360
P2136005
P21380
P2138005
P22200
P22210
P223009
P22310
P2231005
P22360
P2236005
P23200
P23210
P2321005
P233009
P233509
P23360
P2336005
P233602
P24360
P2436005
P28210
P28360
P40360

Prototex® X·pert P AZ

P40310

Paradur® Short Chip HT

20410T2
20410TR
20460T2
20460TR
21460T2
21460TR
AC22410TR
AC22460TR

TMG HRC

H5033008
H5133008

TMG Ni

H5036006
H5036016
H5336006
H5336016

TMO HRC

H5083008

Thrill·tec™

TC645

Tough Guys

H3070318
H3071118
H3071318
H3170318
H3171318

Xill·tec®

MC230
MC233

Alpha® 22
A1276TFL
Alpha® 44
A3486TIP
Alpha® XE
A1247
A1547
A4247
Krato·tec™
WJ30EY
WJ30EZ
NC 120°
A1174C
NC 90°
A1174
VA Inox
A1154TFT
A1254TFT
XD Pilot
A6181TFT
X·treme CI
A3382XPL
X·treme D12
A6589DPP
X·treme D40
A7495TTP
X·treme D50
A7595TTP
X·treme D8
A6489DPP
X·treme DH20
A6794TFP
X·treme DH30
A6994TFP
X·treme DM12
A6589AMP
X·treme DM16
A6689AMP
X·treme DM20
A6789AMP
X·treme DM25
A6889AMP
X·treme DM30
A6989AMP
X·treme DM8
A6489AMP
X·treme Evo
DC160
DC260
X·treme Evo 3
DC183
X·treme Evo Plus
DC180
X·treme M
A3389AML
X·treme Pilot 150
A6181AML
X·treme Pilot 180 C
K5191TFT
X·treme Plus
A3289DPL
A3389DPL

Accure·tec®
A2201
A3000
A3001
AC001
Drion·tec™
D3120
D4120
D4140
Tiger·tec®
WAK10
WAK15
WAK20
WAK30
WKP25
WKP35
WPP01
WPP10
WPP20
WPP23
WPP30
WSM10
WSM13
WSM20
WSM21
WSM30
WSM33
WSM36
WSP43
WSP46
Tiger·tec® Gold
WKK25G
WKP01G
WKP35G
WMP45G
WPP05G
WPP10G
WPP20G
WPP30G
WSM33G
WSM35G
WSM37G
WSP45G
WSP46G
Tiger·tec® Silver
WKK10S
WKK20S
WKK25S
WKP13S
WKP23S
WKP25S
WKP30S
WKP33S
WKP35S
WMP20S
WPP05S
WPP10S
WPP20S
WPP30S
WSM10S
WSM13S
WSM20S
WSM23S
WSM30S

WSM33S
WSM35S
WSM37S
WSM43S
WSM45X
WSP45S
Walter BLAXX
F5038
F5041
F5055
F5055R
F5138
F5141
F5241
M3016
M3024
M3255
Walter Boring MAXI
B3220
B3224
EB329
Walter Boring MEDIUM
B3220
B3220G
B3221
B3221G
EB12
EB205
EB207
EB209
EB211
EB213
EB215
EB216
EB217
EB401
EB402
EB403
Walter Boring XT
B5460
B5560
EB72
EB725
EB726
EB727
EB728
Walter Cut
C3
C4
C5
C6
G1011
G1041
G1042
G1111
G1221
G1332
G1511
G1521
G1551
G1634
G2012
G2016
G2042

G2612
G2622
G2632
G2661
G3011
G3021
G3051
G3221
G4011
G4014
G4041
G4042
G4221
G4511
G4521
G4551
G4634
G4635
I12L90
I12R90
MSS
NCAE16
NCAE20
NCAE25
NCAE32
NCAI16
NCAI20
NCAI25
NCAI32
NCAI40
NCBE20
NCBE25
NCBE32
NCCE16
NCCE20
NCCE25
NCCI16
NCCI20
NCCI40
NCEE20
NCEE25
NCEE32
NCFE25
NCHE20
NCHE25
NCHE32
NCLE25
NCLE32
NCOE25
SBN2020
SBN2520
SBN3229
SBN4037
XLCFN2603J31
XLCFN3203
XLCFN3203M31
XLCFN3204
XLCFN3204M41
XLCFN3206
XLDEL1010K
XLDEL1212K
XLDEL1616K
XLDEL2020K
XLDER1010K

XLDER1212K
XLDER1616K
XLDER2020K
Walter NTS
A20Q
C3
C4
C5
C6
NTS
S16M
S20Q
S25R
S32S
S40T
T1820
Walter Precision DIGITAL
B4035G
EB60
EB603
EB604
EB605
EB606
EB607
EB608
EB609
EB610
EB611
EB612
EB613
EB614
EB615
EB616
EB617
EB618
EB619
EB62
EB620
EB621
EB622
EB623
EB624
EB629
EB63
EB630
EB634
EB637
EB638
EB639
EB64
EB640
EB641
EB643
EB644
EB645
Walter Precision MAXI
B3230
B3234
EB349
Walter Precision MEDIUM
B3230
B3230G
B4030
B4030G

EB12
EB321
EB323
EB325
EB327
EB341
EB343
EB345
EB347
EB349
EB523
EB524
EB525
EB526
EB527
EB528
EB529
EB530
EB531
EB532
EB533
EB534
EB535
EB536
EB537
EB538
EB539
EB540
EB541
EB542
EB543
EB544
EB545
EB546
EB547
EB548
EB549
EB550
Walter Precision MINI
B3230
B3230G
B4030
B4030G
EB10
EB107
EB109
EB11
EB111
EB112
EB12
EB134A
EB135A
EB136A
EB137A
EB138A
EB139A
EB140A
EB301 WK1
EB302 WK1
EB303
EB304
EB305
EB306
EB307

EB308
EB309
EB310
EB311
EB312
EB313
EB314
EB353
EB354
EB355
EB356
EB357
EB358
EB359
EB360
EB361
EB362
EB363
EB364
EB365
EB366
EB367
EB368
EB369
EB370
EB371
EB372
EB373
EB374
EB375
EB376
EB377
EB378
EB379
EB50
EB509
EB51
EB511
EB512
EB514
EB516
EB55
EB554
EB556
Walter Precision XT
B5110
B5115
B5120
B5125
EB701
EB702
EB703
EB704
EB705
EB706
EB707
EB708
EB709
EB71
EB710
EB711
EB712
EB713
EB714

EB715
EB716
EB717
EB72
EB73
Walter Turn
1212L
1212R
12L-W
12ML-
12MR-
12N-W
12R-W
1616L
1616N
1616R
16L-W
16N-W
16R-W
16RL-
16RR-
16TL-
16TR-
2020L
2020N
2020R
20SL-
20SR-
20TL-
20TR-
2525L
2525N
2525R
25TL-
25TR-
3225L
3225R
32TL-
32TR-
40TL-
40TR-
C4L-W
C4N-W
C4R-W
C5L-W
C5N-W
C5R-W
C6L-W
C6N-W
C6R-W
CRDCN
CRDNN
CRSNL
CRSNR
DCBNL
DCBNR
DCKNL
DCKNR
DCLNL
DCLNR
DCMNN
DDHNL
DDHNR
DDJCL

DDJCR
DDJNL
DDJNR
DDMNL
DDNNN
DDPNN
DDQNL
DDQNR
DDUNL
DDUNR
DDXNL
DDXNR
DSBNL
DSBNR
DSDNN
DSKNL
DSKNR
DSRNL
DSRNR
DSSNL
DSSNR
DTFNL
DTFNR
DTGNL
DTGNR
DTJNL
DTJNR
DVJBL
DVJBR
DVJNL
DVJNR
DVMNL
DVPNL
DVPNR
DVTNL
DVTNR
DVUNL
DVUNR
DVVNN
DWLNL
DWLNR
MTJNL
MTJNR
PCBNL
PCBNR
PCKNL
PCKNR
PCLNL
PCLNR
PCSNL
PCSNR
PDJNL
PDJNR
PDUNL
PDUNR
PRDCN
PRGCL
PRGCR
PRSCL
PRSCR
PSBNL
PSBNR
PSDNN
PSKNL

PSKNR
PSRNL
PSRNR
PSSNL
PSSNR
PTFNL
PTFNR
PTGNL
PTGNR
PVHBL
PVHBR
PVJBL
PVJBR
PVVBN
PWLNL
PWLNR
Q32L-
Q32R-
Q40L-
Q40R-
Q50L-
Q50R-
SCLCL
SCLCR
SCLPL
SCLPR
SCMCN
SDHCL
SDHCR
SDJCL
SDJCR
SDNCN
SDQCL
SDQCR
SDUCL
SDUCR
SDXCL
SDXCR
SRACL
SRACR
SRDCN
SRGCL
SRGCR
SRSCL
SRSCR
SSDCL
SSDCN
SSDCR
SSKCL
SSKCR
STFCL
STFCR
STGCL
STGCR
SVHBL
SVHBR
SVJBL
SVJBR
SVMBL
SVQBL
SVQBR
SVUBL
SVUBR
SVVBN

SWLCL
SWLCR
Xtra·tec®
B4213
B4214
D4580
F4030
F4033
F4038
F4041
F4042
F4042R
F4045
F4047
F4048
F4053
F4080
F4138
F4153
F4238
F4253
F4338
Xtra·tec® XT
M5004
M5008
M5009
M5011
M5012
M5130
M5137
M5460
M5468

Technology Features:

WALTER

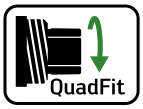

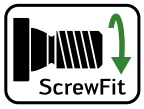

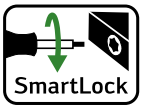

WALTER PROTOTYP

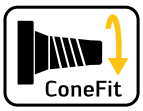

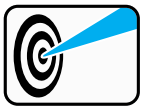

WALTER MULTIPLY

Walter GPS
Walter Innotime®
Walter Reconditioning Service
Walter Recycling

Walter Xpress

Walter PRO

_Walter

Allgemeine Verkaufsbedingungen / General sales conditions / Conditions Générales de Vente / Condizioni generali di vendita / Condiciones generales de venta / Algemene verkoopvoorwaarden

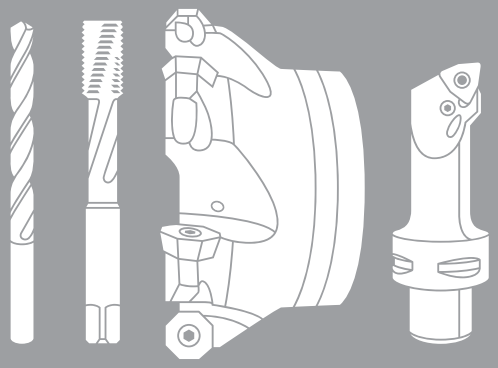

DE
EN

Allgemeine Verkaufsbedingungen

Die in dieser Liste enthaltenen Preise gelten ab Werk, ausschließlich Verpackung und Mehrwertsteuer. Alle gedruckten Preise stellen Preisempfehlungen dar, sind aber nicht bindend. In Rechnung gestellt werden die am Tag der Lieferung geltenden Preise.

Die Ware wird auf Verantwortung des Kunden versendet - im Falle von Ansprüchen aufgrund fehlender oder defekter Produkte, muss der Anspruch innerhalb 3 Werktage erhoben werden, und aufgrund beschädigter Verpackung es sollte der Vermerk „Unter Vorbehalt" mit Unterschrift auf dem Versandschein des Kuriers stehen.

Mindestauftragswert:
Mindestauftragswert: 100,– € pro Auftrag.
Bearbeitungsgebühr: 25,– € netto für Aufträge unterhalb des Mindestauftragswerts.

Retouren:
Retouren oder Umtausch sind nur nach vorheriger Absprache und innerhalb von 30 Tagen möglich. Den Retouren muss die entsprechende Dokumentation (u. a. Auftragsnummer, Rechnungsnummer, Lieferdatum, Grund der Retoure und Retourenvollmacht) beiliegen.
Retouren und umzutauschende Artikel werden nur im Fall lagerhaltiger Standardprodukte akzeptiert, wenn sie in einwandfreiem Zustand (Neuzustand) sind und wenn die Rücksendung im Voraus bezahlt wird.
In Einzelfällen behalten wir uns das Recht vor, eine Bearbeitungsgebühr in Höhe von 30 % des Warenwerts zu erheben. Die Mindestbearbeitungsgebühr für alle Retouren oder Umtauschaktionen beträgt 25,– €.
Die Preis- und Lagerliste gilt ab Januar 2024 und setzt die bisherige Preis und Lagerliste außer Kraft.
Die Liste kann geändert werden und die darin aufgeführten Spezifikationen und Preise können Druckfehler enthalten. Aus solchen Änderungen oder Fehlern sind keine Ansprüche abzuleiten.

Es gelten die aktuellen Liefer- und Zahlungsbedingungen.
Unsere Liefer- und Zahlungsbedingungen finden Sie im Internet auf unserer Website: **walter-tools.com**

General sales conditions

The prices shown in this list apply ex works, excluding packaging and VAT. All the printed prices are recommended but not binding. The prices charged are those valid on the day of delivery.

Goods are shipped under the responsibility of the customers - in case of claims for missing or defected material, the claim must be raised within 3 working days and there should be a signature **under complaint** on the courier delivery log

Minimum order value:
Minimum order value: 100,– € per order.
Handling charge: 25,– € net for orders below the minimum order value.

Return deliveries:
Returns or exchange transactions are only possible subject to prior agreement and within 30 days.
Appropriate documentation must accompany the returns, including order no., invoice no., delivery date reason and authority for returns.
Return or exchange items will be accepted only for the standard valid stock items if in flawless as-new condition and if return delivery is pre-paid.
In individual cases, we may reserve the right for a handling charge up to 30 % of the goods value. The minimum handling charge for any return or exchange delivery is 25,– €.

The price and stock list is valid from January 2024 and supersedes the previous price and stock list.
The list is subject to changes of any description and also to printing errors in the listed specifications and prices. Any such changes or errors do not constitute grounds for claims of any kind.

The current Terms and Conditions of Delivery and Payment apply.
Our Terms and Conditions of Delivery and Payment are published in the Internet on our website: **walter-tools.com**

Conditions Générales de Vente

Les prix indiqués dans ce barème s'entendent départ usine, emballage et TVA non inclus. Tous les prix indiqués sont donnés à titre indicatif et sont sans engagement. Les prix facturés sont ceux applicables le jour de la livraison.

Les marchandises passent aux risques de l'acheteur dès leur livraison telle que définie ci-dessus. Même expédiées franco, les marchandises voyagent aux risques et périls du destinataire, à qui il appartient de les vérifier à l'arrivée et, en cas d'avarie, manquant, etc., d'exercer, conformément à la loi, son recours contre le transporteur par lettre recommandée avec accusé de réception, au plus tard dans les 3 jours suivant le jour de la réception (Article 105 du Code de Commerce). Aucune réclamation sur la quantité ne sera prise en considération si le destinataire n'a pas fait constater par écrit le manquant par le transporteur.

Minimum de commande:
Minimum de commande: 100,– € par commande.
Frais de traitement: 25,– € net pour les commandes dont le montant est inférieur au minimum de commande.

Retour de marchandises:
Les marchandises ne peuvent être retournées ou échangées qu'après autorisation préalable et sous 30 jours. La marchandise retournée doit être accompagnée de la documentation correspondante, y compris le numéro de commande, numéro de facture, date de livraison, justification du retour et autorisation.
Seules les marchandises standard maintenues en stock et en parfait état seront acceptées, et ce uniquement après règlement préalable des frais de retour.
Dans certains cas, nous nous réservons le droit d'appliquer des frais de traitement jusqú à 30 % de la valeur des marchandises.
Les frais de traitement minimum pour tout retour ou échange sont de 25,– €.

Le barème de prix prend effet à compter de Janvier 2024 et remplace le barème précédent.
Le barème est susceptible de faire l'objet de modifications de tout type et de présenter des erreurs d'impression dans les spécifications et les prix.
Ces modifications ou erreurs ne constituent en aucun cas un motif valable de réclamation, quelle qu'elle soit.

Les présentes Conditions Générales de Vente sont celles actuellement en vigueur. Elles sont disponibles sur notre site Internet à l'adresse suivante: **walter-tools.com**

Condizioni generali di vendita

I prezzi riportati nel presente listino si intendono per i prodotti franco magazzino (EXW), transporto, imballo e IVA esclusi. Tutti i prezzi stampati sono raccomandati ma non vincolanti. I prezzi addebitati sono quelli validi il giorno di consegna.

La merce si intende spedita sotto la responsabilità dell'acquirente/cliente - in caso di reclamo per materiale mancante o deteriorato/danneggiato, il reclamo deve pervenire entro 3 giorni lavorativi dal ricevimento merce, ed in caso di pacco danneggiato deve essere firmata la lettera di vettura riportando la dicitura „con riserva".

Valore minimo di ordinazione:
Valore minimo di ordinazione: 100,– € per ordine.
Costi di gestione: 25,– € netti per ordini inferiori al valore minimo di ordinazione.

Reso:
Le operazioni di reso, spedizione o sostituzione sono possibili soltanto su previo accordo ed entro 30 giorni. La merce in reso dovrà essere accompagnata da appropriata documentazione, inclusi n. ordine, n. fattura, giorno di consegna e autorizzazione alla restituzione.
Gli articoli in reso o sostituzione saranno accettati qualora si tratti di articoli standard disponibili a magazzino, in condizioni integre come nuovi, e qualora la spedizione del reso venga pagata in anticipo. In casi particolari, ci possiamo riservare il diritto di applicare un costo di gestione fino al 30 % del valore della merce. Il costo minimo di gestione per ogni reso o sostituzione è pari a 25,– €.

Il listino prezzi e scorte ha validità da Gennaio 2024 e sostituisce i precedenti listini.
Il listino è soggetto a variazioni delle descrizioni e ad errori di stampa nelle specifiche e nei prezzi riportati. Tali cambiamenti o errori non giustificano rimostranze o reclami di alcun tipo.

Si applicano le presenti condizioni e termini di consegna e di pagamento. Le nostre condizioni e termini di consegna e di pagamento sono pubblicate in internet sul nostro sito: **walter-tools.com**

ES
NL

Condiciones generales de venta

Los precios que figuran en la lista son de fábrica, y no incluyen costes de embalaje ni IVA. Todos los precios impresos son precios recomendados, no vinculantes en factura. Se aplican aquellos precios válidos en la fecha de entrega.

Las mercancías son enviadas por cuenta y riesgo del cliente. En caso de reclamación por faltas o daños en mercancías, la reclamación debe ser planteada en un máximo de tres días laborables, y debe figurar la aceptación de la mercancía **salvo examen** en la firma de recepción en la nota de entrega del transportista.

Importe mínimo de pedido:
Importe mínimo de pedido: 100,– € por pedido.
Gastos de tramitación: 25,– € netos para los pedidos cuyo importe sea inferior al importe mínimo de pedido.

Devoluciones:
Las devoluciones o las transacciones de cambio sólo pueden realizarse previo acuerdo y en un plazo de 30 días. Las devoluciones deben ir acompañadas de la documentación adecuada, incluido el número de pedido, el número de factura, el motivo de la devolución y autorización de la misma.
Solo se aceptarán devoluciones o cambios de artículos para los artículos de almacén estándar en perfecto estado y si se sufragan los costes del porte por adelantado.
En ciertos casos, nos reservamos el derecho a aplicar un suplemento por gastos de tramitación de hasta el 30 % del valor de los bienes. El suplemento mínimo por gastos de tramitación para cualquier devolución o cambio es de 25,– €.

La lista de precios y almacén es válida a partir de Enero de 2024 y sustituye la lista de precios y almacén anterior.
Esta lista está sujeta a posibles cambios, en cualquier descripción, así como a errores de impresión en las denominaciones y precios listados.
Cualquier cambio o error de este tipo no constituirá motivo de reclamación de ningún tipo.

Se aplicarán los „Plazos y condiciones de entrega y pago“ actuales. Nuestros „Plazos y condiciones de entrega y pago“ están publicadas en nuestra página web: **walter-tools.com**

Algemene verkoopvoorwaarden

De in deze lijst aangegeven prijzen zijn exclusief werkuren, verpakking en BTW. Alle gedrukte prijzen zijn aanbevolen maar niet bindend. Aangerekend worden de prijzen, die op de dag van de levering geldig zijn.

Minimumwaarde bestelling:
Minimumwaarde bestelling: 100,– € per bestelling.
Verwerkingskosten: 25,– € netto voor bestellingen onder de minimumwaarde van een bestelling.

Retourzendingen:
Retourzendingen of omruilingen zijn alleen mogelijk na voorafgaande goedkeuring en binnen 30 dagen. De teruggezonden goederen moeten vergezeld zijn door de overeenkomstige documentatie, inclusief het nummer van de bestelling, factuur, leverdatum, reden en goedkeuring van de retour.
Retourzendingen of omruilingen worden alleen aanvaard als de goederen in perfecte staat (ongebruikt) zijn en de retourzending voorafbetaald is.
In individuele gevallen behouden wij ons het recht voor om een verwerkingskost aan te rekenen max. 30 % van de waarde van de goederen.
De minimum verwerkingskost voor retourzendingen of omruilingen is 25,– €.

De prijs- en inventarislijst is geldig vanaf Januari 2024 en vervangt de vorige prijs- en inventarislijst.
De lijst is onderhevig aan veranderingen van de beschrijvingen en aan drukfouten in de opgegeven specificaties en prijzen. Dergelijke veranderingen of fouten kunnen geen reden zijn voor klachten.

De huidige bepalingen en voorwaarden voor levering en betaling zijn van toepassing. Onze bepalingen en voorwaarden voor levering en betaling staan op onze website op het internet: **walter-tools.com**